CHEVROLET
CHASSIS GROUP 0.000

ILLUSTRATION INDEX

	TITLE	GRID
1997–1998	Y ENGINE ASM–5.7L V8 PART 2 CYLINDER HEAD AND RELATED PARTS (LS1/5.7G)	1–F7
1997–1998	Y ENGINE ASM–5.7L V8 PART 3 FRONT COVER & COOLING (LS1/5.7G)	1–F11
1997–1998	Y ENGINE ASM–5.7L V8 PART 5 MANIFOLDS AND FUEL RELATED PARTS (LS1/5.7G)	1–F13
1997–1999	Y ENGINE ASM–5.7L V8 PART 4 OIL PUMP, PAN & RELATED PARTS (LS1/5.7G)	1–F19
1997–2001	Y ENGINE ASM–5.7L V8 PART 1 CYLINDER BLOCK AND RELATED PARTS (LS1/5.7G)	1–G2
2001	Y ENGINE ASM–5.7L V8 PART 1 CYLINDER BLOCK AND RELATED PARTS (LS6/5.7S)	1–G2
1999–2000	Y ENGINE ASM–5.7L V8 PART 5 MANIFOLDS AND FUEL RELATED PARTS (LS1/5.7G)	1–G10
1999–2001	Y ENGINE ASM–5.7L V8 PART 2 CYLINDER HEAD AND RELATED PARTS (LS1/5.7G)	1–G15
1999–2001	Y ENGINE ASM–5.7L V8 PART 3 FRONT COVER & COOLING (LS1/5.7G)	1–G19
2001	Y ENGINE ASM–5.7L V8 PART 3 FRONT COVER & COOLING (LS6/5.7S)	1–G19
2000–2001	Y ENGINE ASM–5.7L V8 PART 4 OIL PUMP, PAN & RELATED PARTS (LS1/5.7G)	1–G22
2001	Y ENGINE ASM–5.7L V8 PART 4 OIL PUMP, PAN & RELATED PARTS (LS6/5.7S)	1–G22
2001	Y ENGINE ASM–5.7L V8 PART 2 CYLINDER HEAD AND RELATED PARTS (LS6/5.7S)	1–H2
2001	Y ENGINE ASM–5.7L V8 PART 5 MANIFOLDS AND FUEL RELATED PARTS (LS1/5.7G)	1–H6
2001	Y ENGINE ASM–5.7L V8 PART 5 MANIFOLDS AND FUEL RELATED PARTS (LS6/5.7S)	1–H11
1997–2001	Y ENGINE MOUNTING	1–H16
1997–2001	Y CLUTCH	1–H17
1997–2001	Y CLUTCH LINKAGE	1–H19

cardiagn.com

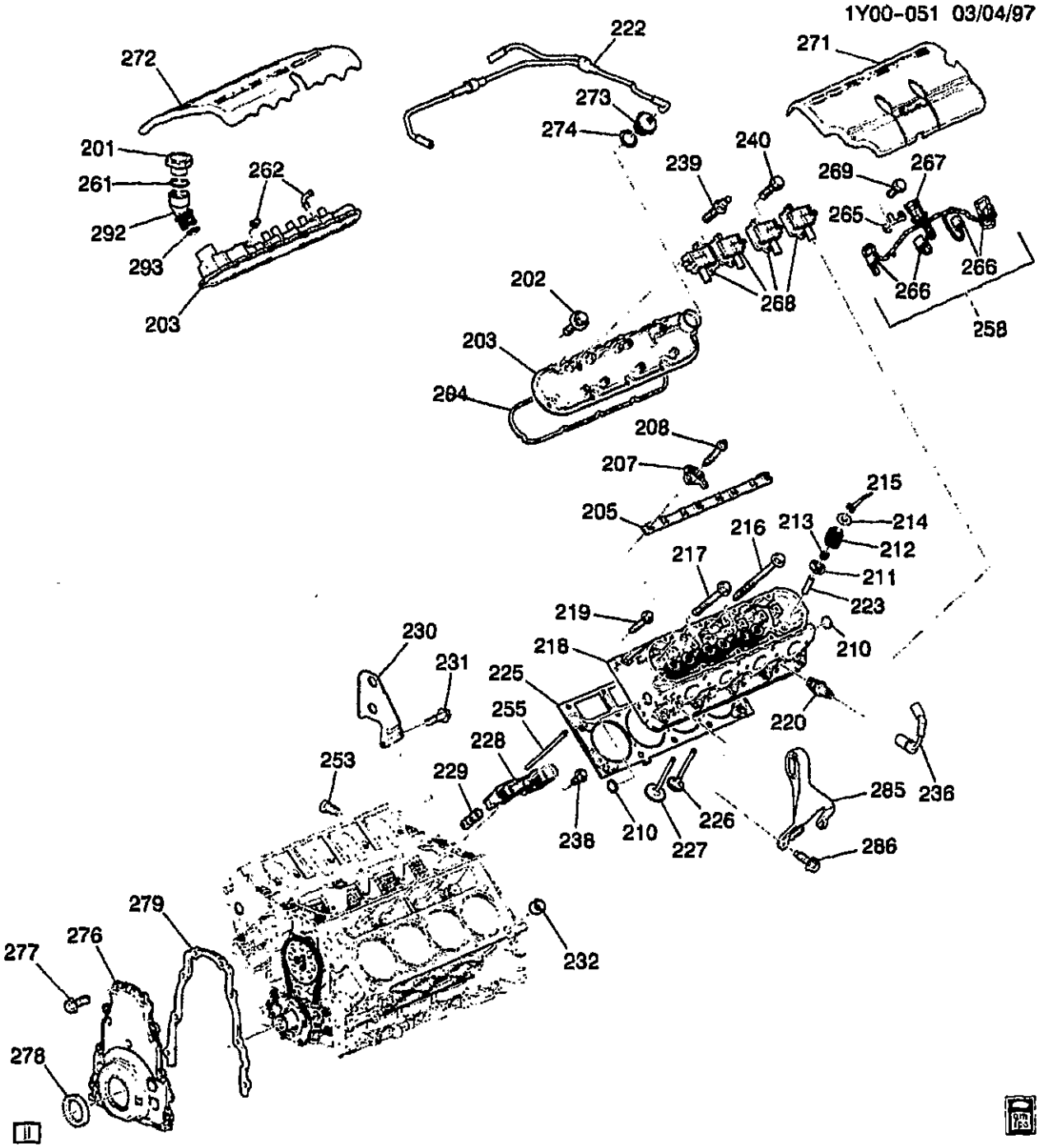

1Y00-051

1997-1998 Y ENGINE ASM-5.7L V8 PART 2 CYLINDER HEAD AND RELATED PARTS (LS1/5.7G)

201.	1-E15	1.758	CAP, OIL FIL (INCLS 261) ("MOBIL 1") (WITH SEAL) (AC-DELCO #RC73)	97-98 Y (LS1)	1	12555685
202.	1-D15	0.413	BOLT, VLV RKR ARM CVR (SPECIAL; M6X1.0X33.5)	97-98 Y (LS1)	20	12556430

cardiagn.com

							1Y00-051	
203.	1-D15	0.386	**COVER**, VLV RKR ARM (INCL 202, 204, 262) (INCLS ATTACH BOLTS)	97-98	Y (LS1)		LH	12559604
	1-D15	0.386	**COVER**, VLV RKR ARM (INCL 202, 204, 273, 274) (INCLS ATTACH BOLTS)	97-98	Y (LS1)		RH	12559603
204.	1-D15	0.423	**GASKET**, VLV RKR ARM CVR (*KIT1)	97-98	Y (LS1)		2	12556429
205.	1-D16	0.429	**SUPPORT**, VLV RKR ARM PIV	97-98	Y (LS1)		2	12552203
207.	1-D15	0.333	**ARM**, VLV RKR	97-98	Y (LS1)		16	10214664
208.	1-D15	0.349	**BOLT**, VLV RKR ARM PIV SUPT	97-98	Y (LS1)		16	12560961
210.	1-D14	0.293	**PLUG**, CYL HD CORE HOLE (CUP, 32.03X7.87X1.47, 1010, 6199-M)	97-98	Y (LS1)		4	1647542
211.	1-D14	0.303	**SHIM**, VLV SPR	97-98	Y (LS1)		16	12551143
212.	1-D14	0.303	**SPRING**, VLV	97-98	Y (LS1)		16	12553698
213.	1-D14	0.308	**SEAL KIT**, INT VLV STEM OIL (INCLS (8) SEALS)	97-98	Y (LS1)		1	12533588
	1-D14	0.309	**SEAL KIT**, EXH VLV STEM OIL (14.4MM) (INCLS (8) SEALS)	97-98	Y (LS1)		1	12457652
214.	1-D15	0.309	**CAP**, VLV SPR	97-98	Y (LS1)		16	10166344
215.	1-D15	0.310	**KEY**, VLV STEM	97-98	Y (LS1)		32	10166345
216.	1-D14	0.293	**BOLT**, CYL HD (M11X2.0X155.0-6G THD) (W/ADHES PATCH)	97	Y (LS1)		16	12560744
	1-D14	0.293	**BOLT**, CYL HD (M11X2.0X155.0-6G THD) (W/ADHES PATCH)	98	Y (LS1)		16	12560744
217.	1-D14	0.293	**BOLT**, CYL HD (M11X2.0X100.0-6G THD) (W/ADHES PATCH)	97	Y (LS1)		4	12560745
	1-D14	0.293	**BOLT**, CYL HD (M11X2.0X100.0-6G THD) (W/ADHES PATCH)	98	Y (LS1)		4	12560745
218.	1-D13	0.269	**HEAD**, CYL	97-98	Y (LS1)		2	12558807
219.	1-D14	0.293	**BOLT**, CYL HD (SHORT) (8X1.25X45)	97-98	Y (LS1)		10	12558840
220.	1-M21	2.270	**SPARK PLUG**, (AC-DELCO #41-974)	97-98	Y (LS1)		8	12563707
	1-M21	2.270	**SPARK PLUG**, (41-931) (AC-DELCO #41-931)	97-98	Y (LS1)		6	25162555
	1-M21	2.270	**SPARK PLUG**, (AC-DELCO #12)	97-98	Y (LS1)		8	25332827
222.	1-E15	1.762	**PIPE**, PCV VLV	97-98	Y (LS1)		1	12558673
	1-E15	1.762	**PIPE**, PCV VLV (VLV IN MIDDLE OF HARNESS)	98	Y (LS1)		1	12560692
223.		N.S.	**GUIDE**, VLV (PART OF 218)					
225.	1-D13	0.269	**GASKET**, CYL HD (*KIT1)	97-98	Y (LS1)		RH	12558809
	1-D13	0.289	**GASKET**, CYL HD (*KIT1)	97-98	Y (LS1)		LH	12558810
226.	1-D14	0.297	**VALVE**, EXH (0.296)	97-98	Y (LS1)		8	12550458
227.	1-D14	0.296	**VALVE**, INT	97-98	Y (LS1)		8	12550457
228.	1-D16	0.439	**GUIDE**, VLV LFTR (ACCOMODATES 4 VLV LFTRS EACH)	97-98	Y (LS1)		4	12551162
229.	1-D16	0.459	**LIFTER**, VLV (AC-DELCO #HL124)	97-98	Y (LS1)		16	17122490
230.		N.S.	**BRACKET**, ENG LIFT RR				1	

cardiagn.com

231.		8.900	**BOLT**, M10X1.5X30, 10.9, 7114M, 22 OD, HDR PT (BOLT, ENG LIFT BRKT)	97-98	Y (LS1)	2	11516328
232.	1-D14	0.293	**PIN**, CYL HD LOC (1/2 X 5/8 O.D.)	97-98	Y (LS1)	4	12558081
236.	1-M21	2.240	**WIRE**, SPLG (POS #1-#8) (STYLE 8DDD) (7.8" LONG) (2.239) (AC-DELCO #348S)	97-98	Y (LS1)	8	12192064
238.	1-D16	0.459	**BOLT**, VLV LFTR GDE (HFH M6X1.0X19, 13 THD, 10.9, GM4435M. MACH. DOG PT & SHOULDER)	97-98	Y (LS1)	4	12551163
239.	1-M21	2.183	**STUD**, IGN COIL (HFH, M6X1.0X40, SPECIAL HD)	97-98	Y (LS1)	9	12557539
240.	1-M21	2.183	**STUD**, IGN COIL (HFH, M6X1.0X40, SPECIAL HD)	97-99	Y (LS1)	4	12557539
253.	1-D14	0.293	**PLUG**, CYL HD CORE HOLE (THREADED)	97-98	Y (LS1)	1	12553191
255.	1-D15	0.426	**ROD**, VLV PUSH	97-98	Y (LS1)	16	10238852
358.	1-M21	2.240	**WIRE**, IGN COIL (INCLS 265, 266, 267, 269) (W/CLIP) (LH & RH BANKS) (PRIMARY)	97-98	Y (LS1)	2	15301401
261.		N.S.	**SEAL**, O-RING FIL (PART OF ITEM #201				
262.		N.S.	**ELBOW**, PCV (PART OF ITEM #203)				
265.		N.S.	**BRACKET**, ENG WRG HARN CONN				
266.	1-M21	2.170	**CONNECTOR**, COIL-IGN (4-WAY F) (W/LEADS, IN A ROW) (4.651) (AC-DELCO #PT368)	97-98	Y (LS1)	8	12102741
267.	1-N15	2.530	**CONNECTOR**, INLINE-TO ENG HARN (7-WAY M, W/LEADS) (AC-DELCO #PT261)	97-98	Y (LS1)	1	12102490
268.	1-M21	2.170	**COIL**, IGN (AC-DELCO #D580)	97-98	Y (LS1)	8	12558948
269.		8.900	**BOLT/SCREW**, HFH, M6X1X10, 9.8, PZOR, 7114M, 14.2, FLG OD (BOLT, WRG HARN BRKT)	97-98	Y (LS1)	4	11516421
271.	1-N22	3.330	**COVER**, F/INJN FUEL RL	97-99	Y (LS1)	LH	12559261
272.	1-N22	3.330	**COVER**, F/INJN FUEL RL	97-99	Y (LS1)	RH	12556455
273.	1-E15	1.762	**FITTING**, PCV (INCLS 274)	97-99	Y (LS1)	1	12557672
274.		N.S.	**SEAL**, PCV FITTING (PART OF 273				
276.	1-D13	0.208	**COVER**, ENG FRT (INCLS CVR, SEAL, GSKT, BOLT)	97-98	Y (LS1)	1	12561243
277.	1-D13	0.137	**BOLT**, CR/SHF RR OIL SEAL HSG (M8X1.25X30, 26 THD, 18 OD, 10.9, 7114M, MACH) (8.900)	97-98	Y (LS1)	12	11515758
	1-D13	0.137	**BOLT**, CR/SHF RR OIL SEAL HSG (HFH M8X1.25X30, 23.85 THD, 10.9, PZ GM7114M, MACH) (8.900)	97-98	Y (LS1)	12	12551187
278.	1-D13	0.213	**SEAL**, CR/SHF FRT OIL	97-98	Y (LS1)	1	12561244
279.	1-D13	0.207	**GASKET**, ENG FRT CVR	97-98	Y (LS1)	1	12558013
285.		N.S.	**BRACKET**, ENG LIFT FRT				

cardiagn.com

							1Y00-051
286.	1-D12	0.004	BOLT, ENG LIFT BRKT (M10X1.5X35, 32THD, 10.9) (8.900)	97-98	Y (LS1)	2	11515767
292.	1-E14	1.745	TUBE, OIL FIL (INCLS 293)	97-98	Y (LS1)	1	12559505
293.		N.S.	SEAL, O-RING FIL (PART OF ITEM #292		.....		

SERVICE KITS

1.	1-D13	0.289	GASKET KIT, CYL HD (INCL 204, 225) (KIT INCLUDES: GASKETS FOR CYLINDER HEAD, INTAKE AND EXHAUST MANIFOLD, VALVE COVERS AND SEAL, ENG COOL AIR BL PIPE (O-RING) ...	97-98	Y (LS1)	1	12369018

RPO DEFINITIONS

LS1 – ENGINE GAS, 8 CYL, 5.7L, SFI, ALUMINUM ENGINE

cardiagn.com

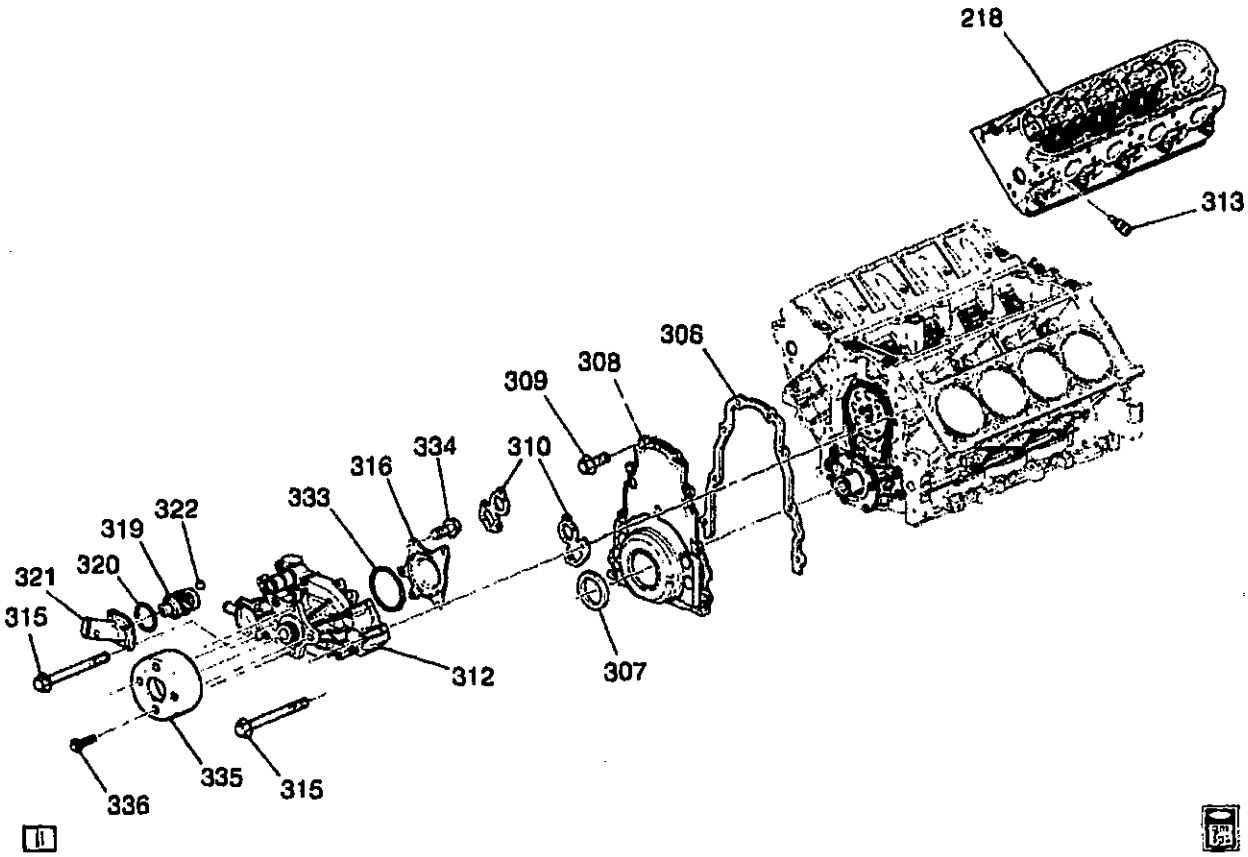

1Y00-052

1997-1998 Y ENGINE ASM-5.7L V8 PART 3 FRONT COVER & COOLING (LS1/5.7G)

218.	1-D13	0.269	**HEAD**, CYL	97-98	Y (LS1)	2	12558807
306.	1-D13	0.207	**GASKET**, ENG FRT CVR	97-98	Y (LS1)	1	12558013
307.	1-D13	0.213	**SEAL**, CR/SHF FRT OIL (ALSO PART OF 308)	97-98	Y (LS1)	1	12561244
308.	1-D13	0.206	**COVER**, ENG FRT (INCL 304, 307) (INCLS CVR, SEAL, GSKT, BOLT)	97-98	Y (LS1)	1	12561243
309.	1-D13	0.206	**BOLT**, ENG FRT CVR (M8X1.25X30, 28 THD, 18 OD, 10.9, 7114M, MACH) (8.900)	97-98	Y (LS1)	12	11515758
	1-D13	0.206	**BOLT**, ENG FRT CVR (HFH M8X1.25X30, 23.85 THD, 10.9, PZ GM7114M, MACH) (8.900)	97-98	Y (LS1)	12	12551187
310.	1-E8	1.079	**GASKET**, W/PMP (ALSO PART OF 312)	97-98	Y (LS1)	2	12559648
312.	1-E8	1.069	**PUMP**, WAT (INCLS 310, 316) (LESS PRESS-ON STYLE PULLEY) (AC-DELCO #251-596)	97-98	Y (LS1)	1	12369537
313.	1-N24	3.682	**SENSOR**, ENG COOL TEMP (AC-DELCO #25037062)	97-98	Y (LS1)	1	25037062

cardiagn.com

							1V00-052
	1-E9	1.150	**CONNECTOR**, SEN-ENG COOL TEMP (BLACK) (2-WAY F W/LEADS) (2.383) (AC-DELCO #PT169)	97-98	Y (LS1)	1	12101889
315.	1-E8	1.079	**BOLT**, W/PMP (USED W/SEALANT) (M8X1.25X82.6, 31.8 THD, 17 OD, 10.9, GM7114M MZF)	97-98	Y (LS1)	6	12551926
316.		N.S.	**COVER**, W/PMP (BACKPLATE) (PART OF 312)	97-98	Y (LS1)	1	12557710
319.		N.S.	**THERMOSTAT**, ENG COOL (INCL 312, 321)				
320.	1-E9	1.123	**SEAL**, W/PMP (ALSO PART OF #319)	97-98	Y (LS1)	1	12561155
321.	1-E8	1.073	**INLET**, W/PMP (INCLS 319, 322) (INCLS INLET, THERMOSTAT, SEAL, VALVE, RET)	97-98	Y (LS1)	1	12562740
322.		N.S.	**VALVE**, ENG COOL AIR BL (PART OF 321)				
333.	1-E9	1.123	**SEAL**, W/PMP CVR (O RING) (ALSO PART OF 312)	97-98	Y (LS1)	1	12551905
334.		N.S.	**BOLT**, W/PMP CVR (PART OF 312) (M6X1X25)				
335.	1-E7	1.062	**PULLEY**, W/PMP	97-98	Y (LS1)	1	12552059
336.	1-E7	1.062	**BOLT**, W/PMP PUL (M8X1.25X20) (8.900)	97-98	Y (LS1)	4	11515756

RPO DEFINITIONS
LS1 – ENGINE GAS, 8 CYL, 5.7L, SFI, ALUMINUM ENGINE

cardiagn.com

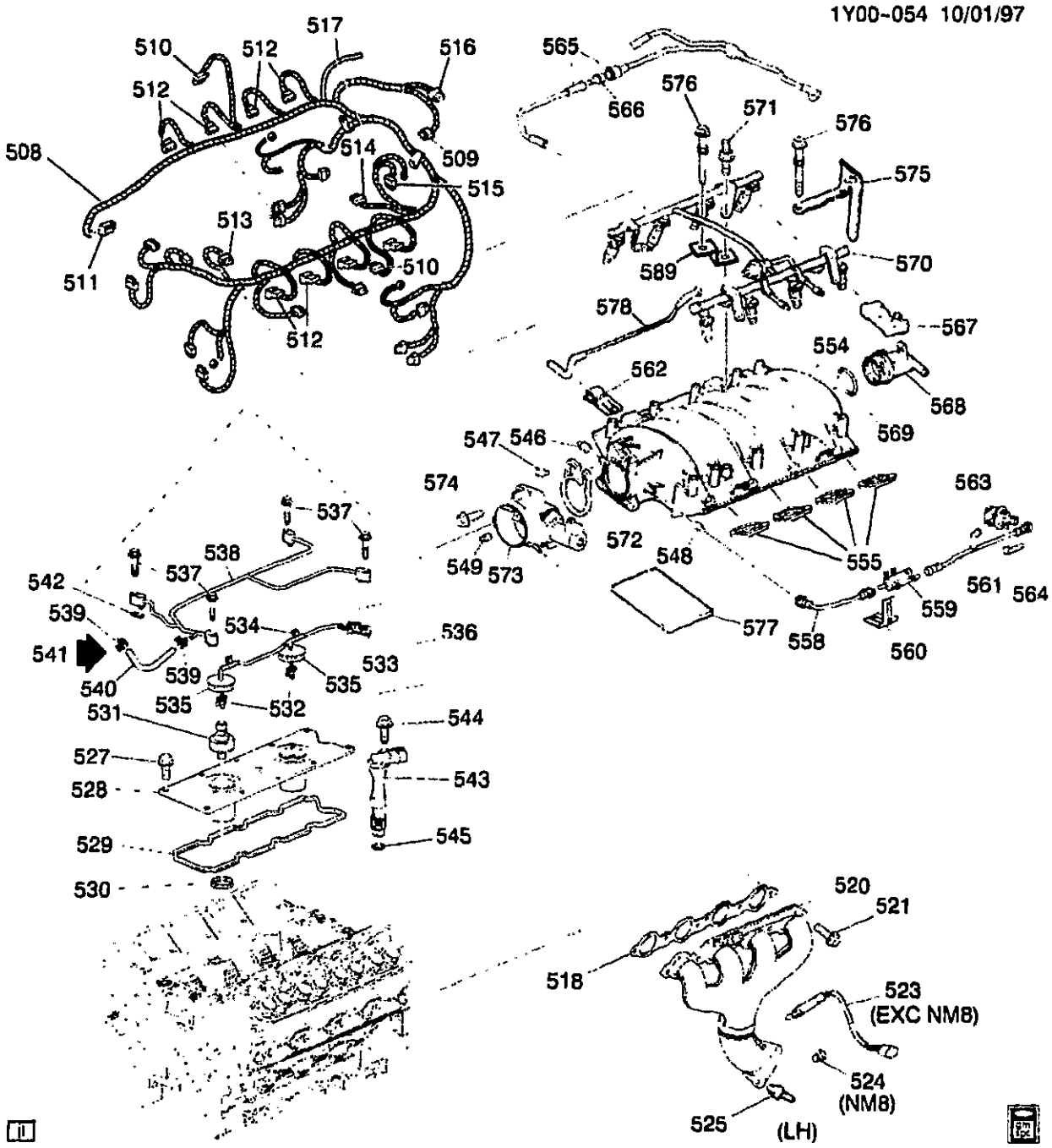

1Y00-054

1997-1998 Y ENGINE ASM-5.7L V8 PART 5 MANIFOLDS AND FUEL RELATED PARTS (LS1/5.7G)

508.	1-N15	2.525	HARNESS, ENG WRG	97	Y (M30)	1	12163328
	1-N15	2.525	HARNESS, ENG WRG	97	Y (MM6)	1	12163330
	1-N15	2.525	HARNESS, ENG WRG	98	Y (M30) (EXC JAG)	1	12163328
	1-N15	2.525	HARNESS, ENG WRG	98	Y (MM6) (EXC JAG, VD1)	1	12163330
	1-N15	2.525	HARNESS, ENG WRG	98	Y (M30, JAG)	1	12163794

cardiagn.com

							1Y00-054
	1-N15	2.525	**HARNESS**, ENG WRG	98	Y (MM6, JAG) (EXC VD1)	1	12163795
	1-N15	2.525	**HARNESS**, ENG WRG	98	Y (MM6, JAG, VD1) (EXPORT)	1	12169910
509.	1-M22	2.383	**CONNECTOR**, SEN-CM/SHF POSN (PART OF 508) (BLACK) (3-WAY F) (W/LEADS) (2.535) (AC-DELCO #PT117)	97-98	Y (LS1)	1	12085495
510.	1-M22	2.383	**CONNECTOR**, MDL-ELEK IGN CONT (7-WAY F, W/LEADS) (8.965) (AC-DELCO #PT381) ...	97-98	Y (LS1)	2	12102754
511.	1-N23	3.339	**CONNECTOR**, SEN-THROT POSN (6-WAY F) (W/LEADS) (WIRE CAVITIES CAN BE PLUGGED W/12065266) (2.383) (AC-DELCO #PT787)	97-98	Y	1	12167121
512.	1-N13	2.483	**CONNECTOR**, INJR-FUEL (2-WAY F) (W/LEADS) (2.535) (AC-DELCO #PT113)	97-98	Y	8	12085491
513.	1-N23	3.454	**CONNECTOR**, MOT-THROT ACTR (BLACK) (2-WAY M) (W/LEADS) (13.090) (AC-DELCO #PT288)	97-98	Y (LS1)	1	12116247
	1-N23	3.454	**CONNECTOR**, MOT-THROT ACTR (TO I/P HARNESS) (BLACK) (10-WAY F) (W/LEADS) (2.530) (AC-DELCO #PT588) ...	97	Y07	1	12125676
514.	1-N15	2.530	**CONNECTOR**, INLINE-TO KNOCK SEN (PART OF 508) (BLACK) (2-WAY F W/LEADS) (3.670) (AC-DELCO #PT374) ...	97-98	Y (LS1)	1	12102747
515.	1-E13	1.516	**CONNECTOR**, SEN-ENG OIL LVL (BLACK) (2-WAY F W/LEADS) (3.670) (AC-DELCO #PT374)	97-98	Y	2	12102747
516.	1-N24	3.682	**CONNECTOR**, SEN-MAP (GRAY) (3-WAY F)	97-98	Y (LS1)	1	12129946
517.	1-N27	9.281	**HOSE**, HTR & A/C CONT VAC TK (HOSE, VAC .HVAC PORT) (ENG HARN SECTION)	97-98	Y (LS1)	1	12124136
518.	1-N21	3.272	**GASKET**, EXH MANIF (*KIT1) (3.270)	97-98	Y (LS1)	2	12558573
520.	1-N23	3.601	**MANIFOLD**, EXH (INCLS 524, 525)	97-98	Y (LS1)	LH	12561308
	1-N23	3.601	**MANIFOLD**, EXH (INCLS 524, 525)	97-98	Y (LS1)	RH	12561309
521.	1-N21	3.275	**BOLT**, EXH MANIF	97-98	Y (LS1)	12	12560206
523.	1-N24	3.682	**SENSOR**, HTD OXY (AC-DELCO #AFS75)	97	Y (LS1)	1	25312184
	1-N24	3.682	**SENSOR**, HTD OXY (AC-DELCO #AFS75)	98	Y (LS1)	1	25312184
524.		6.971	**PLUG-EXT**, M18X1.5X10 TAPPERED 1:16, 19 OD, 22 OAL, SAE 1010/1012 (OXY SEN HOLE)	97-98	Y (LS1)	1	25509274
525.	1-N23	3.613	**STUD**, EXH PIPE	97	Y (LS1)	6	12561310
	1-N23	3.613	**STUD**, EXH PIPE	98	Y (LS1)	6	12561310

cardiagn.com

527.	1-N21	3.265	**BOLT**, ENG BLK VALLEY CVR (ENG BLK VALLEY CVR) (PART OF 528) (HFH M8X1.25X30, 23.65 THD, 10.9, PZ GM7114M, MACH) (8.900)	97-98	Y (LS1)	10	12551187
528.	1-N21	3.265	**COVER**, ENG BLK VALLEY (INCLS 527, 529, 530)	97-98	Y (LS1)	1	12561106
529.	1-N21	3.270	**GASKET**, ENG BLK VALLEY CVR (PART OF 528)	97-98	Y (LS1)	1	12558178
530.	1-M22	2.383	**GROMMET**, KNOCK SEN (PART OF 528)	97-98	Y (LS1)	2	12558177
531.	1-M22	2.383	**SENSOR**, KNOCK (AC-DELCO #213-298)	97	Y (LS1)	2	10456222
	1-M22	2.383	**SENSOR**, KNOCK (W/LOCATING TAB, 2ND DES SEE 10456603) (AC-DELCO #213-298)	98	Y (LS1) (1ST DES)	2	10456222
	1-M22	2.383	**SENSOR**, KNOCK (W/O LOCATING TAB, 1ST DES SEE 10456222) (AC-DELCO #213-362)	98	Y (LS1) (2ND DES)	2	10456603
532.	1-M22	2.383	**CONNECTOR**, SEN-KNOCK (PART OF 536) (1-WAY M, W/LEADS, HIGH TEMP) (1.150) (AC-DELCO #PT727)	98	Y (LS1)	2	12126456
	1-M22	2.383	**CONNECTOR**, SEN-KNOCK (FRONT) (PART OF 536) (1-WAY F) (W/O LEADS) (M/P 150 SLD)	97-98	Y	2	12176800
	1-M22	2.383	**CONNECTOR**, SEN-KNOCK (FRONT) (PART OF 536) (1-WAY F) (W/LEADS) (M/P 150 SLD) (AC-DELCO #PT1233)	97	Y (LS1)	2	15306070
	1-M22	2.383	**CONNECTOR**, SEN-KNOCK (USE W/SENSOR STAMPED 10456603 & CONNECTOR W/O INDEX TAB) (PART OF 536) (1-WAY M, W/LEADS, HIGH TEMP) (1.150) (AC-DELCO #PT727)	98	Y (LS1) (2ND DES)	2	12126456
	1-M22	2.383	**CONNECTOR**, SEN-KNOCK (USE W/SENSOR STAMPED 10456222 & W/INDEX TAB ON CONNECTOR TO SENSOR) (PART OF 536) (1-WAY F) (W/LEADS) (M/P 150 SLD) (AC-DELCO #PT1233) (FOR 2ND DES SEE 12126456)	98	Y (LS1) (1ST DES)	1	15306070
533.	1-N15	2.530	**CONNECTOR**, INLINE-TO ENG HARN (PART OF 536) (BLACK) (2-WAY M) (W/LEADS) (4.720) (AC-DELCO #PT788)	97	Y (LS1)	1	12167120
	1-N15	2.530	**CONNECTOR**, INLINE-TO ENG HARN (PART OF 536) (BLACK) (2-WAY M) (W/LEADS) (4.720) (AC-DELCO #PT786)	98	Y (LS1)	1	12167120
534.		N.S.	**CLIP**, HARNESS KNOCK SENSOR JUMPER (PART OF 536	97	Y (LS1)	2	
		N.S.	**CLIP**, HARNESS KNOCK SENSOR JUMPER (PART OF 536	98	Y (LS1)	2	

cardiagn.com

535.		N.S.	**GROMMET**, KNOCK SENSOR (PART OF 536	97	Y (LS1)	2	12554408
		N.S.	**GROMMET**, KNOCK SENSOR (PART OF 536	98	Y (LS1)	2	12554408
536.	1-M23	2.480	**WIRE**, KNOCK SEN (INCLS 532, 533, 534, 535)	97	Y (LS1)	1	15320549
	1-M23	2.480	**WIRE**, KNOCK SEN (USE W/KNOCK SENSOR STAMPED 10456222 & W/INDEX TAB ON CONNECTOR TO SENSOR) (INCLS 532, 533, 534, 535) (FOR 2ND DES SEE 15320925)	98	Y (LS1) (1ST DES)	1	15320549
	1-M23	2.480	**WIRE**, KNOCK SEN (USE W/KNOCK SENSOR STAMPED 10456603 & CONNECTOR W/O INDEX TAB) (INCLS 532, 533, 534, 535) (FOR 1ST DES SEE 15320549)	98	Y (LS1) (2ND DES)	1	15320925
537.	1-E8	1.097	**BOLT**, ENG COOL AIR BL PIPE (M6X1.0X30) (8.900)	97-98	Y (LS1)	4	11514008
538.	1-E8	1.097	**PIPE**, ENG COOL AIR BL (INCLS 539, 541, 542)	97-98	Y (LS1)	1	12557538
539.		8.948	**CLAMP**, SPRG BAND, 14.2MM, 9/16 OD HOSE, POR (CLAMP, ENG COOL AIR BL HOSE) (PART OF 538)	97-98	.....	AR	25526358
540.	1-E8	1.097	**HOSE**, ENG COOL AIR BL (PART OF 538)	97-98	Y (LS1)	1	12556443
541.		8.800	**LUBRICANT**, RUBBER 5 GAL (ENG COOL AIR BL HOSE)	97-98	Y (LS1)	AR	12345884
542.	1-E8	1.097	**SEAL**, ENG COOL AIR BL PIPE (O RING) (PART OF 538)	97-98	Y (LS1)	4	12551933
		8.800	**LUBRICANT**, RUBBER 5 GAL (NOTE:APPLY TO SEAL (542)	97-98	Y (LS1)	AR	12345884
543.	1-M22	2.383	**SENSOR**, CM/SHF POSN (INCL 545) (AC-DELCO #213-355) ...	97-98	Y (LS1)	1	12560229
		N.S.	**CONNECTOR**, SEN-CM/SHF POSN		.....		
544.		8.900	**BOLT**, HFH, M8X1.25X20, 17THD, 18OD (BOLT, CR/SHF POSN SEN)	97-98	.....	1	11515756
545.		N.S.	**SEAL**, CM/SHF POSN SEN HOLE PLUG (O RING) (PART OF 543) ..		.....	1	
546.		N.S.	**CONNECTOR**, PCV CR/CASE VENT (PART OF 554		Y (LS1)	1	
547.		N.S.	**CONNECTOR**, PCV FRESH AIR TO CR/CASE (PART OF 573		Y	1	
548.		N.S.	**CONNECTOR**, PURGE PORT (PART OF 554		Y	1	
549.		N.S.	**CONNECTOR**, VAPOR VENT TUBE (PART OF 573		Y	1	
554.	1-N21	3.265	**MANIFOLD**, INT (SERV) (SEE GROUP 3.000 "FUEL RAIL, INTAKE MANIFOLD, THROTTLE BODY "FOR DETAIL ILLUSTRATED VIEW.) (INCLS 546, 548, 568)	97-98	Y (LS1)	1	12557846

cardiagn.com

555.	1-N21	3.270	**GASKET KIT**, INT MANIF (CONTAINS 8 GASKETS)	97-98	Y (LS1)	1	12533587
558.	1-N21	3.145	**TUBE**, EVAP EMIS CNSTR PURGE (FROM VALVE TO THROTTLE BODY)	97-98	Y (LS1)	1	12552222
559.	1-N20	3.130	**VALVE**, EVAP EMIS CNSTR PURGE SOL (AC-DELCO #214-641)	97-98	Y (LS1)	1	1997278
560.	1-N20	3.130	**BRACKET**, EVAP EMIS CNSTR PURGE SOL VLV	97-98	Y (LS1)	1	12560884
561.	1-N21	3.145	**HARNESS**, EVAP EMIS CNSTR PURGE (INCLS 563, 564)	97-98	Y (LS1, MM8)	1	12557008
	1-N21	3.145	**HARNESS**, EVAP EMIS CNSTR PURGE (INCLS 563, 564)	97-98	Y (LS1, M30)	1	12557008
562.	1-E15	1.762	**RETAINER**, PCV VLV PIPE	97-98	Y (LS1)	2	12557340
563.	1-N21	3.140	**SWITCH**, EVAP EMIS CNSTR PURGE VAC	97-98	Y (LS1)	1	12556798
		N.S.	**CONNECTOR**, SW-EVAP EMIS CNSTR PURGE VAC DIAGN		.....		
564.		N.S.	**CONNECTOR**, EVAP EMIS CNSTR PURGE HOSE (PART OF 561, 563)		.....		
565.	1-E15	1.762	**PIPE**, PCV VLV (INCLS 566)	97-98	Y (LS1)	1	12558673
	1-E15	1.762	**PIPE**, PCV VLV (VLV IN MIDDLE OF HARNESS) (INCLS 566)	98	Y (LS1)	1	12560692
566.	1-E14	1.745	**VALVE**, PCV (PART OF 565) (AC-DELCO #CV948C)	97-98	Y (LS1)	1	25179136
567.	1-N24	3.682	**SENSOR**, MAP (W/SEAL) (AC-DELCO #213-331)	97-98	Y (LS1)	1	16212460
	1-N24	3.682	**CONNECTOR**, SEN-MAP (GRAY) (3-WAY F)	97-98	Y (LS1)	1	12129946
568.		N.S.	**PLUG**, MAP SEN HOLE (PART OF 554) (INCLS 569)		.....		
569.		N.S.	**SEAL**, MAP SEN HOLE PLUG (O RING) (PART OF 568)		.....		
570.	1-N22	3.330	**RAIL**, SEQ M/PORT F/INJN FUEL (SEE GROUP 3.000 "RAIL" FOR DETAIL ILLUSTRATED VIEW.) (AC-DELCO #12556705)	97-98	Y (LS1)	1	12556705
571.	1-N22	3.330	**STUD**, F/INJN FUEL RL (HFH 6X1X18.5X14 W/ADH, 6X1X14, 39.1 OAL, 14.2 OD, 9.8, 7114M) (AC-DELCO #12554211)	97-98	Y (LS1)	4	12554211
572.	1-N22	3.336	**SEAL**, THROT BODY	97-98	Y (LS1)	1	12552542
573.	1-N22	3.335	**BODY**, THROT (SEE GROUP 3.000 "BODY, THROT"FOR DETAIL ILLUSTRATED VIEW. (INCLS 547, 549) (AC-DELCO #17113564)	97-98	Y (LS1)	1	17113564
574.	1-N22	3.336	**BOLT**, THROT BODY (M6X1.0X30) (8.900)	97-98	Y (LS1)	3	11514009
575.	1-N22	3.330	**BRACKET**, F/INJN FUEL RL (ON INTAKE MANIFOLD BEHIND FUEL RAIL-STOP)	97-98	Y (LS1)	LH	12556074
576.	1-N21	3.275	**BOLT**, INT MANIF (W/FLAT WASHER) (M6X1.0X21.8, 13.6 OD, GM500M, ZF, MACH, ADHES)	97-98	Y (LS1)	10	12552344

cardiagn.com

								1Y00–054
577.	1–N21	3.270	**SEAL**, INT MANIF	97–98	Y (LS1)	.....	2	12560251
578.	1–N22	3.330	**TUBE**, FUEL PRESS REG VAC ..	97–98	Y (LS1)	.....	1	12557155
589.	1–N22	3.330	**BRACKET**, F/INJN FUEL RL (90 DEG "S" TYPE BRKT) (GROUND STRAP))	97–98	Y (LS1)	.....	RH	12560384

SERVICE KITS

1.	1–D13	0.289	**GASKET KIT**, CYL HD (INCLS KIT CONTAINS: GASKETS FOR CYLINDER HEAD, INTAKE AND EXHAUST MANIFOLDS, SEAL–ENG COOL AIR BL PIPE (O–RING)	97–98	Y (LS1)	.....	1	12369018

RPO DEFINITIONS

JAG – BRAKE PROVISIONS ABS LOCATION
LS1 – ENGINE GAS, 8 CYL, 5.7L, SFI, ALUMINUM ENGINE
MM6 – TRANSMISSION MAN 6 SPD, BORG WARNER, 85MM, 1ST 2.66, 6TH 0.50, O/D
M30 – TRANSMISSION,AUTOMATIC 4 SPEED,4L60E,ELECTRONIC
VD1 – PROVISION OPTIONS,EUROPE(EXPORT)

cardiagn.com

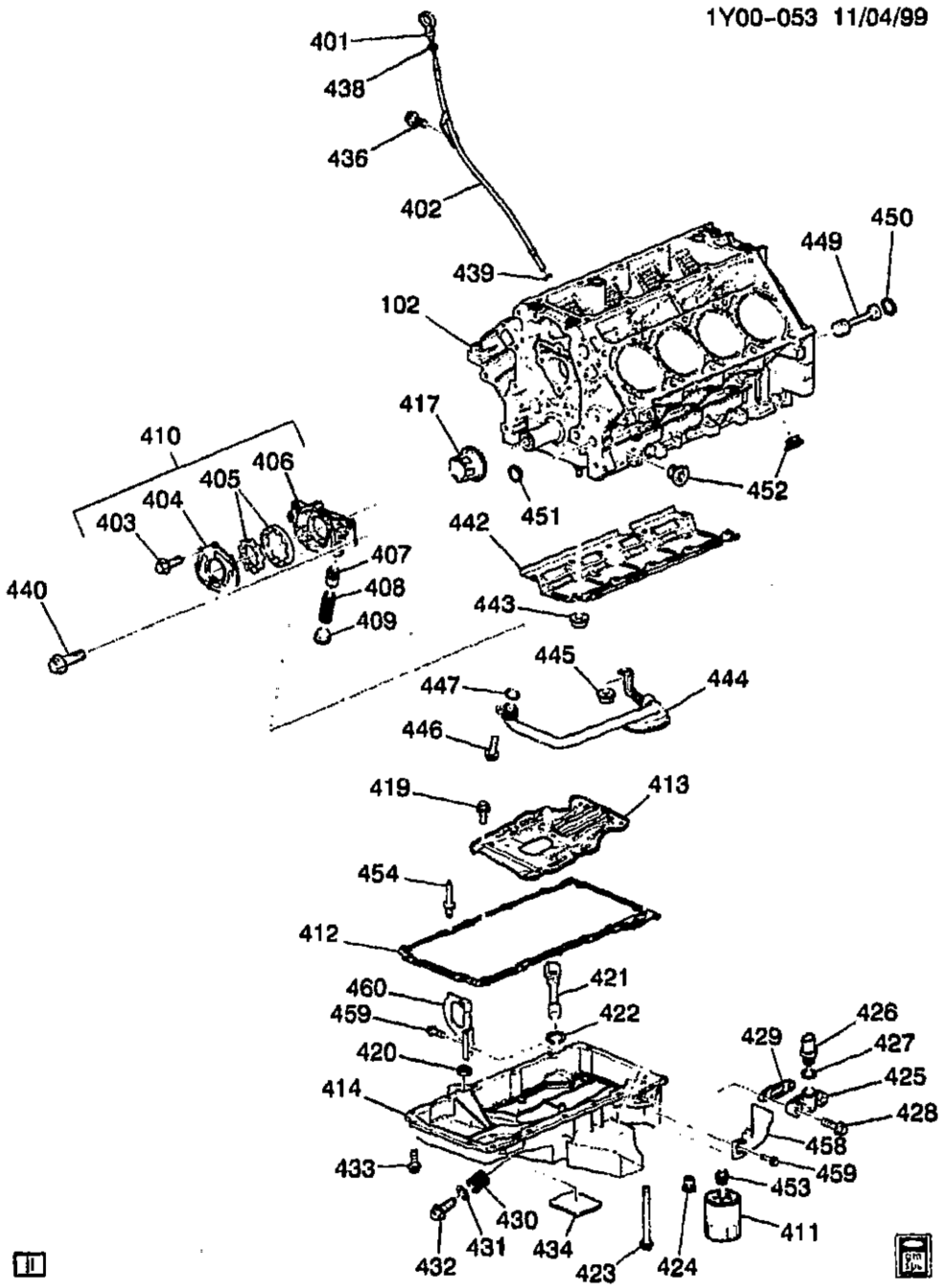

1997-1999 Y ENGINE ASM-5.7L V8 PART 4 OIL PUMP, PAN & RELATED PARTS (LS1/5.7G)

102.		N.S.	BLOCK, ENG	.....		
401.	1-E13	1.516	INDICATOR, OIL LVL	98 Y (LS1)	1	12558988
	1-E13	1.516	INDICATOR, OIL LVL (O/PAN CAST #12557843, 1ST DES SEE 12559524)	97 Y (LS1) (2ND DES)	1	12558988
	1-E13	1.516	INDICATOR, OIL LVL (O/PAN CAST #12557984, 2ND DES SEE 12558988)	97 Y (LS1) (1ST DES)	1	12559524

cardiagn.com

	1-E13	1.516	**INDICATOR**, OIL LVL (1-PC O/P;LENGTH FROM TIP TO 1ST BLADE WAVE IS 51.0 MM, STMP 12558988 ; 2ND DES SEE 12562468.)	99	Y (LS1) (1ST DES)	1	12558988
	1-E13	1.516	**INDICATOR**, OIL LVL (2-PC O/P; LENGTH FROM TIP TO 1ST BLADE WAVE IS 56.6MM, STMP 12562468 1ST DES SEE 12558988)	99	Y (LS1) (2ND DES)	1	12562468
402.	1-E13	1.516	**TUBE**, OIL LVL IND (INCL #439)	97-99	Y (LS1)	1	12556405
403.		8.977	**SCREW**, M6X1X20, 12.7 OD, 6202M, PO (O/PMP DRV SHF) (PART OF 410)	97-99	(LS1)	7	11514300
404.		N.S.	**COVER**, O/PMP (PART OF 410)				
405.		N.S.	**GEAR SET**, O/PMP (PART OF 410)				
406.		N.S.	**HOUSING**, O/PMP (PART OF 410)				
407.		N.S.	**VALVE**, OIL PRESS RLF (PART OF 410)				
408.		N.S.	**SPRING**, OIL PRESS RLF VLV (PART OF 410)				
409.		N.S.	**PLUG**, OIL PRESS RLF VLV BORE (PART OF 410)				
410.	1-E14	1.652	**PUMP**, OIL (INCLS 403, 404, 405, 406, 407, 408, 409)	97-99	Y (LS1)	1	12563984
411.	1-E16	1.836	**FILTER**, OIL (PF44) (AC-DELCO #PF44)	97-99	Y (LS1)	1	25010633
	1-E16	1.836	**FILTER**, OIL (AC-DELCO #SPF44)	97-99	Y (LS1)	1	25329388
	1-E16	1.836	**FILTER**, OIL (AC-DELCO #UPF44)	97-99	Y (LS1)	1	25329389
412.	1-E13	1.429	**GASKET**, OIL PAN (UPPER TO BLK) (PART OF 414)	97-99	Y (LS1)	1	12558760
413.	1-E13	1.430	**BAFFLE**, OIL PAN (PART OF 414)	97-99	Y (LS1)	1	12558246
414.	1-E12	1.426	**PAN**, OIL (GULL-WING OIL PAN) (INCLS #412, 413, 419, 420, 421, 422, 423, 424, 425, 426, 427, 428, 429, 430, 431, 432, 433, 434, 454)	97-99	Y (LS1)	1	12561828
417.	1-D19	0.728	**SPROCKET**, CR/SHF	97-99	Y (LS1)	1	12556582
419.	1-E13	1.430	**BOLT**, OIL PAN BFL (BOLT, OIL PAN BFL) (ALSO PART OF 414) (14.865)	97	Y (LS1)	8	10258914
	1-E13	1.430	**BOLT**, OIL PAN BFL (BOLT, OIL PAN BFL) (ALSO PART OF 414) (14.865)	98-99	Y (LS1)	8	10258914
420.	1-E12	1.428	**PLUG**, OIL PAN HOLE (16.33X6.6X1, 38 BRASS)	97-99	Y (LS1)	4	12558663
421.	1-E13	1.516	**SWITCH**, ENG OIL LVL IND (CAUTION: (APPLY MOTOR OIL TO THREADS-DO NOT EXCEED INSTALLATION**TORQUE) (INCLS 422) (PART OF 414)	97-99	Y (LS1)	1	24507190
		N.S.	**CONNECTOR**, SEN-ENG OIL LVL				

cardiagn.com

422.		N.S.	**SEAL**, ENG OIL LEVER IND (PART OF 421, 414		.....		
423.	1-E12	1.428	**BOLT**, OIL PAN (PART OF 414) (M6X1.0X136, 85 THD, 14.2 OD, 10.9, GM7114M, MACH)	97	Y (LS1)	2	12554990
	1-E12	1.428	**BOLT**, OIL PAN (PART OF 414) (M8X1.0X136, 85 THD, 14.2 OD, 10.9, GM7114M, MACH)	98-99	Y (LS1)	2	12554990
424.		1.837	**VALVE**, OIL FLTR BYPASS	97-99	Y (LS1)	1	25014051
425.	1-E12	1.426	**COVER**, OIL PAN (PART OF 414)	97-99	Y (LS1)	1	12551587
426.	1-E15	1.800	**SENSOR**, ENG OIL T/GA (INCLS #427) (PART OF 414) (3.682) (AC-DELCO #25037062)	97-98	Y (LS1)	1	25037062
	1-E15	1.800	**SENSOR**, ENG OIL T/GA (INCLS #427) (PART OF 414) (3.682) (AC-DELCO #213-794)	99	Y (LS1)	1	15369305
	1-E15	1.800	**CONNECTOR**, SEN-ENG OIL TEMP GA (BLACK) (2-WAY F W/LEADS) (2.383) (AC-DELCO #PT189)	97	Y (LS1)	1	12101699
	1-E15	1.800	**CONNECTOR**, SEN-ENG OIL TEMP GA (BLACK) (2-WAY F W/LEADS) (2.383) (AC-DELCO #PT169)	98-99	Y (LS1)	1	12101699
427.		N.S.	**GASKET**, ENG OIL TEMP (PART OF #414		.....		
428.	1-E12	1.428	**BOLT**, OIL PAN CVR (PART OF #414) (M6X1X30, POR 9.8) (8.900)	97	Y (LS1)	2	11516425
	1-E12	1.428	**BOLT**, OIL PAN CVR (PART OF #414) (M6X1X30, POR 9.8) (8.900)	98-99	Y (LS1)	2	11516425
429.	1-E13	1.429	**GASKET**, OIL PAN CVR (PART OF #414) (SIDE OF OIL PAN LOCATION BY SENSOR, ENG COOL TEMP/-COVER)	97-99	Y (LS1)	1	12553210
430.		N.S.	**INSERT**, OIL PAN DRN PLUG THD (PART OF 414)	97	Y (LS1)	1	
		N.S.	**INSERT**, OIL PAN DRN PLUG THD (PART OF 414)	98	Y (LS1)	1	
		N.S.	**INSERT**, OIL PAN DRN PLUG THD (PART OF 414)	99	Y (LS1)	1	
431.	1-E13	1.456	**SEAL**, OIL PAN DRN PLUG (O RING) (PART OF #414)	97-99	Y (LS1)	1	3536966
432.	1-E13	1.453	**PLUG**, OIL PAN DRN (PART OF 414) (M12X1.75-6G THD, 44.45MM LNG, 15MM FLG HEX HD) (W/MAGNET & SEAL)	97-99	Y (LS1)	1	24100042
433.	1-E12	1.428	**BOLT**, OIL PAN (PART OF 414) (HFH M8X1.25X30, 23.85 THD, 10.9, PZ GM7114M, MACH) (8.900)	97	Y (LS1)	13	12551187
	1-E12	1.428	**BOLT**, OIL PAN (PART OF 414) (HFH M8X1.25X30, 23.85 THD, 10.9, PZ GM7114M, MACH) (8.900)	98-99	Y (LS1)	13	12551187
434.		N.S.	**LABEL**, OIL PAN IDENT (PART OF 414)	97	Y (LS1)	1	12556686

cardiagn.com

		N.S.	**LABEL**, OIL PAN IDENT (PART OF 414)	98-99	Y (LS1)	1	12558688
436.	1-E13	1.516	**BOLT**, OIL LVL IND TUBE (6X1X12.15) (3.602)	97-99	Y (LS1)	1	24505098
438.	1-E13	1.516	**SEAL**, OIL LVL IND (O RING) (PART OF #401) (BLACK) (6.07MM ID, 17.8MM DIA)	97-99	Y (LS1)	1	24504091
439.		N.S.	**SEAL**, OIL LVL IND TUBE O-RING (PART OF #402				
440.	1-E14	1.652	**BOLT**, O/PMP (HFH M8X1.25X30, 23.85 THD, 10.9, PZ GM7114M, MACH) (8.900)	97	Y (LS1)	4	12551187
	1-E14	1.652	**BOLT**, O/PMP (HFH M8X1.25X30, 23.85 THD, 10.9, PZ GM7114M, MACH) (8.900)	98-99	Y (LS1)	4	12551187
442.	1-E13	1.430	**DEFLECTOR**, CR/SHF OIL	97-99	Y (LS1)	1	12558189
443.	1-D17	0.648	**NUT**, CR/SHF OIL DFL (8.917)	97-99	Y (LS1)	9	11517031
444.	1-E14	1.656	**SCREEN**, O/PMP (W/SUC PIPE)	97-99	Y (LS1)	1	12558750
445.	1-E14	1.656	**NUT**, O/PMP SUC PIPE (8.917)	97-99	Y (LS1)	1	11517031
446.		8.900	**BOLT/SCREW**, HFH M6X1X20, 9.8, 7114M, DOG PT, 14.2 OD (BOLT, O/PMP SUC PIPE)	97	Y (LS1)	1	11516398
		8.900	**BOLT/SCREW**, HFH M6X1X20, 9.8, 7114M, DOG PT, 14.2 OD (BOLT, O/PMP SUC PIPE)	98-99	Y (LS1)	1	11516398
447.	1-E14	1.724	**SEAL**, O/PMP (O RING)	97-99	Y (LS1)	1	12557752
449.	1-E14	1.531	**PLUG**, ENG BLK OIL GAL (INCLS 450)	97	Y (LS1)	1	12558340
	1-E14	1.531	**PLUG**, ENG BLK OIL GAL (INCLS 450)	98-99	Y (LS1)	1	12558340
450.		N.S.	**SEAL**, ENG BLK OIL GAL PLUG (O RING) (PART OF 449)				
451.		8.970	**PLUG**, CUP 5/8 HOLE CORROSION RESISTANT STL PL (PLUG, ENG BLK OIL GAL)	97	Y (LS1)	1	9427693
		8.970	**PLUG**, CUP 5/8 HOLE CORROSION RESISTANT STL PL (PLUG, ENG BLK OIL GAL)	98-99	Y (LS1)	1	9427693
452.	1-E14	1.531	**PLUG**, ENG BLK OIL GAL (M16X1.5X6G) (STEEL, ZIVC 4345M, USE T/W SEALER 12346004 (OR EQUIV)) (0.034)	97	Y (LS1)	2	21007339
	1-E14	1.531	**PLUG**, ENG BLK OIL GAL (M16X1.5X6G) (STEEL, ZIVC 4345M, USE T/W SEALER 12346004 (OR EQUIV)) (0.034)	98-99	Y (LS1)	2	21007339
453.	1-E16	1.855	**FITTING**, OIL FLTR	97-99	Y (LS1)	1	12552357
454.		N.S.	**RIVET**, OIL PAN GSKT (PART OF 414) (POP-OFF TYPE)				
458.	1-N26	4.105	**COVER**, TRANS (AC-DELCO #12559501)	97-99	Y (LS1)	LH	12559501
459.		8.977	**SCREW**, M6X1X20 (RH & LH-SIDE)	97-99		2	10077361
460.	1-N26 1-N26	4.105	**COVER**, TRANS (AC-DELCO #12562042)	97-99	Y (LS1)	RH	12562042

RPO DEFINITIONS

LS1 – ENGINE GAS, 8 CYL, 5.7L, SFI, ALUMINUM ENGINE

cardiagn.com

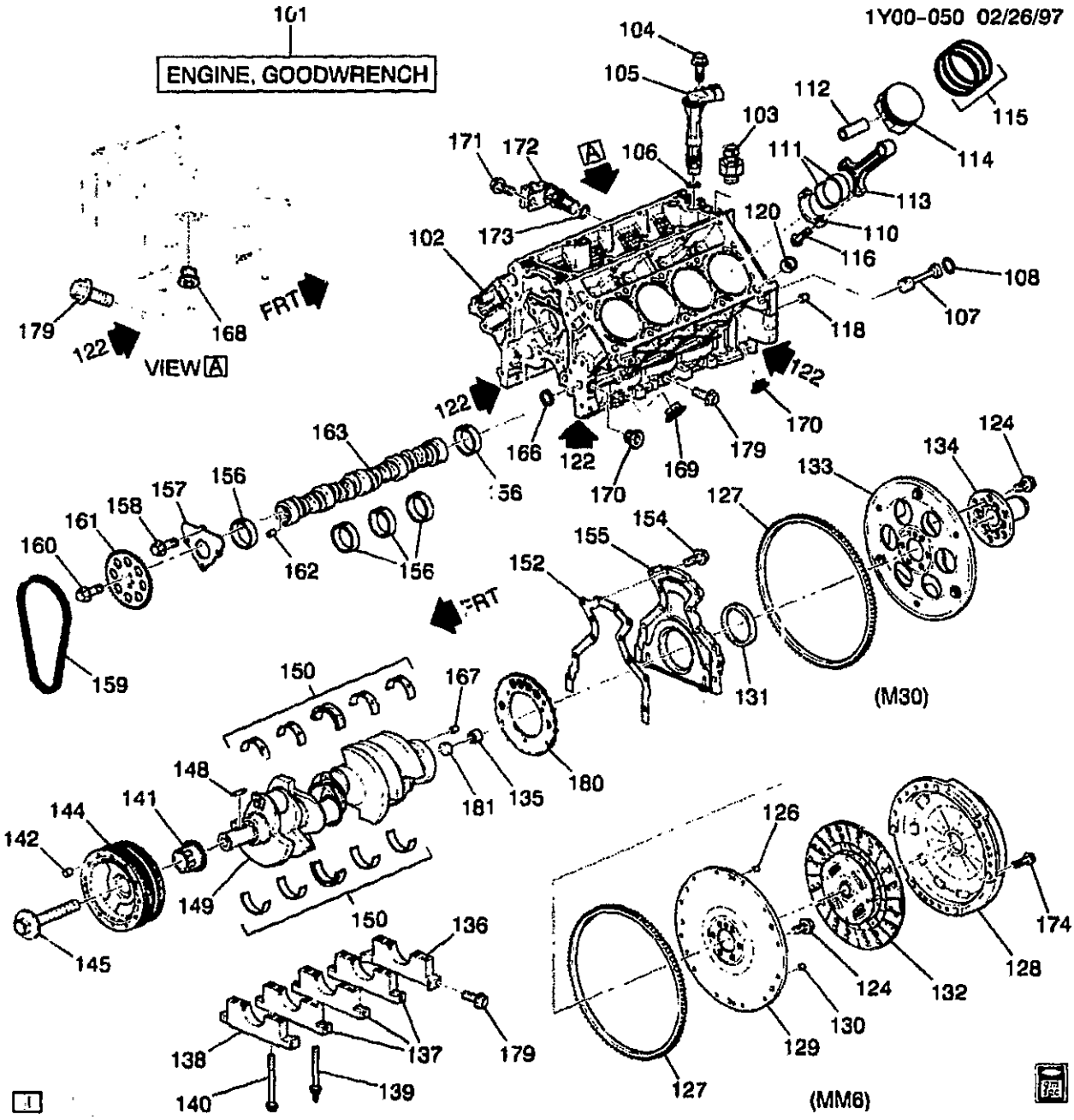

1Y00-050

1997-2001 Y ENGINE ASM-5.7L V8 PART 1 CYLINDER BLOCK AND RELATED PARTS (LS1/5.7G)
2001 Y ENGINE ASM-5.7L V8 PART 1 CYLINDER BLOCK AND RELATED PARTS (LS6/5.7S)

101.	1-D11	0.000 A	ENGINE, GASOLINE (GOODWRENCH) (NEW) (REFER TO NOTE #6 IN CATALOG TEXT) (INCL 102, 107, 110, 111, 112, 113, 114, 115, 116, 118, 120, 131, 135, 136, 137, 138, 139, 140, 149, 150, 152, 154, 155, 156)	00 Y (LS1)	1	88893286

cardiagn.com

	1-D11	0.000 A	ENGINE, GASOLINE (GOODWRENCH) (NEW) (REFER TO NOTE #6 IN CATALOG TEXT) (INCL 102, 107, 110, 111, 112, 113, 114, 115, 116, 118, 120, 131, 135, 136, 137, 138, 139, 140, 149, 150, 152, 154, 155, 156)	01	Y (LS1)	1	88894056
	1-D11	0.000 A	ENGINE, GASOLINE (GOODWRENCH) (NEW) (REFER TO NOTES 3, 3A IN CATLG TEXT) (INCL 102, 107, 110, 111, 112, 113, 114, 115, 116, 118, 120, 131, 135, 136, 137, 138, 139, 140, 149, 150, 152, 154, 155, 156)	99	Y (LS1)	1	12457660
	1-D11	0.000 A	ENGINE, GASOLINE (GOODWRENCH) (REFER TO NOTE #6 IN CATALOG TEXT) (INCL 102, 107, 110, 111, 112, 113, 114, 115, 116, 118, 120, 131, 135, 136, 137, 138, 139, 140, 149, 150, 152, 154, 155, 156)	01	Y (LS6)	1	88894057
	1-D11	0.000 A	ENGINE, GASOLINE (GOODWRENCH) (REFER TO NOTES #3, #3A IN CATLG TEXT) (INCL 102, 107, 110, 111, 112, 113, 114, 115, 116, 118, 120, 131, 135, 136, 137, 138, 139, 140, 149, 150, 152, 154, 155, 156)	97-98	Y (LS1)	1	12455109
102.		N.S.	BLOCK, ENG		.....		
103.	1-E15	1.800	SENSOR, F/PMP SW & ENG OIL PRESS GA (AC-DELCO #12562230)	01	Y (LS6)	1	12562230
		8.800	SEALANT, PIPE W/TEFLON (HEAVY BODY) (SEALER, ENG OIL PRESS GA SEN)	97-01	.....	AR	12378190
104.		8.900	BOLT, HFH, M8X1.25X20, 17THD, 18OD (CM/SHF POSN SEN)	97-01	.....	1	11515756
105.	1-M22	2.383	SENSOR, CM/SHF POSN (INCL #106) (AC-DELCO #213-355) .	97-98	Y (LS1)	1	12560229
	1-M22	2.383	SENSOR, CM/SHF POSN (INCL #106) (AC-DELCO #213-363) .	99-01	Y (LS1)	1	12561211
	1-M22	2.383	SENSOR, CM/SHF POSN (INCL #106) (AC-DELCO #213-363) .	01	Y (LS6)	1	12561211
		N.S.	CONNECTOR, SEN-CM/SHF POSN		.....		
106.		N.S.	SEAL, CM/SHF SENSOR O'RING (PART OF ITEM #105		Y (LS1)		
107.	1-E14	1.531	PLUG, ENG BLK OIL GAL	97	Y (LS1)	1	12558340
	1-E14	1.531	PLUG, ENG BLK OIL GAL	98-00	Y (LS1)	1	12558340
	1-E14	1.531	PLUG, ENG BLK OIL GAL	01	Y (LS1, LS6)	1	12558340
108.		N.S.	SEAL, ENG BLK OIL GAL PLUG (O RING) (PART OF ITEM #107) .		.....	1	
110.		N.S.	CAP, CONN ROD (PART OF 113) .		.....		
111.		0.616	BEARING KIT, CONN ROD	01	.....		
	1-D16	0.616	BEARING KIT, CONN ROD (STD)	97-00	Y (LS1)	8	12523924
	1-D16	0.616	BEARING KIT, CONN ROD	01	Y (LS1)	8	12493712
112.		N.S.	PIN, PSTN (PART OF 114)		.....		
113.	1-D16	0.603	ROD, CONN (INCLS 110, 116) ...	97-01	Y (LS1)	8	12568734

cardiagn.com

	1-D16	0.603	ROD, CONN (INCLS 110, 116) ...	01	Y (LS6)	8	12568734
114.	1-D17	0.629	PISTON, (W/PIN) (INCL 112) (0.250MM O.S.)	97-00	Y (LS1)	8	12456109
	1-D17	0.629	PISTON, (W/PIN) (INCL 112) (STD)	97-00	Y (LS1)	8	12456108
	1-D17	0.629	PISTON, (W/PIN) (INCL 112) (STD)	01	Y (LS1)	8	88894011
	1-D17	0.629	PISTON, (W/PIN) (INCL 112) (STD)	01	Y (LS6)	8	88894011
115.		0.643	RING KIT, PSTN	01	.....		
	1-D17	0.643	RING KIT, PSTN (.250MM O.S.) ..	97-00	Y (LS1)	8	12453325
	1-D17	0.643	RING KIT, PSTN (STD) (STD)	97-00	Y (LS1)	8	12533556
116.	1-D17	0.623	BOLT, CONN ROD (ALSO PART OF 113) (M9X1X40.5, 15THD, 8135) (STELCO (NO COLLAR ON SHAFT) ;TORQUE 20 N-M & 65 DEGREES)	97-99	Y (LS1)	16	10239136
	1-D17	0.623	BOLT, CONN ROD (ALSO PART OF 113) (M9X1X43) (HOLLINGSWORTH) (FERRULE ON NECK)	97-01	Y (LS1)	16	12568069
	1-D17	0.623	BOLT, CONN ROD (ALSO PART OF 113) (M9X1X43) (HOLLINGSWORTH) (FERRULE ON NECK)	01	Y (LS6)	16	12568069
118.		8.939	PIN, DOWEL STRAIGHT 5/8 DIA 1 3/16 LG (TRANS LOC)	97-01	.....	2	12338119
120.	1-D14	0.293	PIN, CYL HD LOC (1/2 X 5/8 O.D.)	97-00	Y (LS1)	4	12558081
	1-D14	0.293	PIN, CYL HD LOC	01	Y (LS1)	4	12570326
	1-D14	0.293	PIN, CYL HD LOC	01	Y (LS6)	4	12570326
122.		8.800	SEALANT, PIPE W/TEFLON (HEAVY BODY) (SEALER, OIL PAN AT FOUR CORNER (ANAEROBIC GASKET SEALANT))	97-01	Y	AR	12378190
124.	1-D18	0.669	BOLT, FLYWHL (HFH, M11X1.5X23.5, 21 THD, 22 O.D., 10.9, GM7114M, MACH, W/SEALANT)	97	Y (LS1)	6	12553332
	1-D18	0.669	BOLT, FLYWHL (HFH, M11X1.5X23.5, 21 THD, 22 O.D., 10.9, GM7114M, MACH, W/SEALANT)	98-00	Y (LS1)	6	12553332
	1-D18	0.669	BOLT, FLYWHL (HFH, M11X1.5X23.5, 21 THD, 22 O.D., 10.9, GM7114M, MACH, W/SEALANT)	01	(LS1, LS6)	6	12553332
126.		8.939	PIN, DOWEL, M6X20, PL (FLYWHL LOC) (PART OF 129) ...	97-01	.....	2	11505920
127.	1-D19	0.673	GEAR, STRTR DRVN RING (PART OF #129 OR #133)	97	Y (LS1)	1	460583
	1-D19	0.673	GEAR, STRTR DRVN RING (PART OF #129 OR #133)	98-00	Y (LS1)	1	460583
	1-D19	0.673	GEAR, STRTR DRVN RING (PART OF #129 OR #133)	01	Y (LS1)	1	460583
128.		N.S.	PLATE, CLU PRESS (W/CVR & CLU REL BRG) (PART OF 129) ...		.....		

cardiagn.com

							1Y00-050
129.	1-D18	0.666	**FLYWHEEL**, (W/CLU PRESS PLT) (MANUAL TRANS) (INCLS 126, 127, 128, 130, 132)	97-00	Y (LS1, MM6)	1	12562765
	1-D18	0.666	**FLYWHEEL**, (W/CLU PRESS PLT) (MANUAL TRANS) (INCLS 126, 127, 128, 130, 132)	01	Y (LS1, MM6)	1	12562765
130.	1-D18	0.669	**WEIGHT**, FLYWHL (BARREL-SHAPED PIN (GROOVE-F), .75" LONG) (MANUAL TRANS)	97-00	Y (LS1)	AR	3890193
	1-D18	0.669	**WEIGHT**, FLYWHL (BARREL-SHAPED PIN (GROOVE-F), 1.0" LONG) (MANUAL TRANS)	97-99	Y (LS1)	AR	3890194
	1-D18	0.669	**WEIGHT**, FLYWHL (BARREL-SHAPED PIN, .625" LONG) (MANUAL TRANS)	97-01	Y (LS1)	AR	3890191
	1-D18	0.669	**WEIGHT**, FLYWHL (BARREL-SHAPED PIN, .50" LONG) (MANUAL TRANS) (2380/.2500 X .50) (BARREL-SHAPED PIN) (GROOVE-F)	97-99	Y (LS1)	AR	3890192
	1-D18	0.669	**WEIGHT**, FLYWHL (BARREL-SHAPED PIN, .625" LONG) (MANUAL TRANS)	01	Y (LS6, M12)	AR	3890191
131.	1-D13	0.137	**SEAL**, CR/SHF RR OIL (ALSO PART OF 137)	97-01	Y (LS1)	1	12550574
	1-D13	0.137	**SEAL**, CR/SHF RR OIL (ALSO PART OF 137)	01	Y (LS6)	1	12550574
132.	1-D21	0.665	**PLATE**, CLU DRVN (PART OF 129)	97	Y (LS1, MM6)	1	12551990
	1-D21	0.686	**PLATE**, CLU DRVN (PART OF 129)	98-00	Y (LS1, MM6)	1	12562611
	1-D21	0.886	**PLATE**, CLU DRVN (PART OF 129)	01	Y (LS1, MM6)	1	12570280
	1-D21	0.886	**PLATE**, CLU DRVN (PART OF 129)	01	Y (LS6, M12)	1	12570280
133.	1-D18	0.666	**PLATE**, A/TRNS FLEX (AUTO TRANSMISSION) (INCLS #127, 134) (MATCHED SET;INCLS: FLYWHL, R/GR, PROP SHF HUB)	97	Y (LS1, M30)	1	12559038
	1-D18	0.666	**PLATE**, A/TRNS FLEX (AUTO TRANSMISSION) (INCLS #127, 134) (MATCHED SET;INCLS: FLYWHL, R/GR, PROP SHF HUB)	98-99	Y (LS1, M30)	1	12559036
	1-D18	0.666	**PLATE**, A/TRNS FLEX (AUTO TRANSMISSION) (INCLS #127, 134) (MATCHED SET;INCLS: FLYWHL, R/GR, PROP SHF HUB)	00	Y (LS1, M30)	1	12559038
134.		N.S.	**HUB**, PROP SHF (PART OF 133) (ATTACHING BOLTS AND NUTS FOR HUB PART OF 133)		.....		
135.	1-D17	0.649	**BEARING**, CLU PILOT	97-01	Y (LS1, MM6)	1	14061665
	1-D17	0.649	**BEARING**, CLU PILOT	01	Y (LS6, M12)	1	14061665
136.		N.S.	**CAP**, CR/SHF BRG (POS#5 (REAR)		.....		

cardiagn.com

								1Y00-050
137.		N.S.	CAP, CR/SHF BRG (POS #2, 3, 4 - (INTERMEDIATE))					12557549
138.		N.S.	CAP, CR/SHF BRG (POS #1 (FRONT)					
139.	1-D12	0.056	STUD, CR/SHF BRG CAP (M10X2X23 / M8X1.25X10.9, MICRO ZINC PHOSPHATE)	97-01	Y (LS1)		10	12560273
	1-D12	0.056	STUD, CR/SHF BRG CAP (M10X2X23 / M8X1.25X10.9, MICRO ZINC PHOSPHATE)	01	Y (LS6)		10	12560273
140.	1-D12	0.056	BOLT, CR/SHF BRG CAP (M10X2X102.5, 24.5 THD)	97	Y (LS1)		10	12560272
	1-D12	0.056	BOLT, CR/SHF BRG CAP (M10X2X102.5, 24.5 THD)	98-00	Y (LS1)		10	12560272
	1-D12	0.056	BOLT, CR/SHF BRG CAP (M10X2X102.5, 24.5 THD)	01	Y (LS1, LS6)		10	12560272
141.	1-D19	0.728	SPROCKET, CR/SHF	97-01	Y (LS1)		1	12556592
	1-D19	0.728	SPROCKET, CR/SHF	01	Y (LS6)		1	12556592
142.	1-D18	0.669	WEIGHT, CR/SHF BALR (CR/SHF BAL) (WEIGHT) (2380/.2500 X .50) (BARREL-SHAPED PIN) (GROOVE-F)	97-01	Y (LS1)		AR	3890192
	1-D18	0.669	WEIGHT, CR/SHF BALR (CR/SHF BAL) (WEIGHT) (2380/.2500 X .50) (BARREL-SHAPED PIN) (GROOVE-F)	01	Y (LS6)		AR	3890192
	1-D18	0.669	WEIGHT, CR/SHF BALR (BARREL-SHAPED PIN (GROOVE-F), .75" LONG) (CR/SHF BAL) (WEIGHT)	97-01	Y (LS1)		AR	3890193
	1-D18	0.669	WEIGHT, CR/SHF BALR (BARREL-SHAPED PIN (GROOVE-F), .75" LONG) (CR/SHF BAL) (WEIGHT)	01	Y (LS6)		AR	3890193
144.	1-D17	0.659	BALANCER, CR/SHF	97-00	Y (LS1)		1	12553474
	1-D17	0.659	BALANCER, CR/SHF	01	Y (LS1)		1	12560115
	1-D17	0.659	BALANCER, CR/SHF	01	Y (LS6)		1	12560115
145.	1-D17	0.662	BOLT, CR/SHF BALR (HFH M16X2.0X103, 59 THD, 48 MM OD, 10.9, GM7114M, MACH)	97	Y (LS1)		1	12557840
	1-D17	0.662	BOLT, CR/SHF BALR (HFH M16X2.0X103, 59 THD, 48 MM OD, 10.9, GM7114M, MACH)	98-00	Y (LS1)		1	12557840
	1-D17	0.662	BOLT, CR/SHF BALR (HFH M16X2.0X103, 59 THD, 48 MM OD, 10.9, GM7114M, MACH)	01	Y (LS1, LS6)		1	12557840
148.	1-D17	0.662	KEY, CR/SHF BALR (LGTH-37.5MM, WIDTH-4.77MM)	97-01	Y (LS1)		1	12561513
	1-D17	0.662	KEY, CR/SHF BALR (LGTH-37.5MM, WIDTH-4.77MM)	01	Y (LS6)		1	12561513
149.	1-D17	0.646	CRANKSHAFT, (INCLS ITEM #180)	97-01	Y (LS1)		1	12559354
	1-D17	0.646	CRANKSHAFT, (INCLS ITEM #180)	01	Y (LS6)		1	12559354
150.	1-D12	0.098	BEARING KIT, CR/SHF (#1, 2, 4, 5) (STD)	97-01	Y (LS1)		4	88890525

cardiagn.com

							1Y00-050
	1-D12	0.096	BEARING KIT, CR/SHF (#1, 2, 4, 5) (STD)	01	Y (LS6)	4	88890525
	1-D12	0.096	BEARING KIT, CR/SHF THR (#3)	97-01	Y (LS1)	1	88890528
	1-D12	0.096	BEARING KIT, CR/SHF THR (#3)	01	Y (LS6)	1	88890526
152.	1-D13	0.137	GASKET, CR/SHF RR OIL SEAL HSG	97-01	Y (LS1)	1	12559769
	1-D13	0.137	GASKET, CR/SH." RR OIL SEAL HSG	01	Y (LS6)	1	12559769
154.	1-D13	0.137	BOLT, CR/SHF RR OIL SEAL HSG (HFH M8X1.25X30, 23.85 THD, 10.9, PZ GM7114M, MACH) (8.900)	97	Y (LS1)	12	12551187
	1-D13	0.137	BOLT, CR/SHF RR OIL SEAL HSG (HFH M8X1.25X30, 23.65 THD, 10.9, PZ GM7114M, MACH) (8.900)	98-01	Y (LS1)	12	12551187
	1-D13	0.137	BOLT, CR/SHF RR OIL SEAL HSG (HFH M8X1.25X30, 23.85 THD, 10.9, PZ GM7114M, MACH) (8.900)	01	Y (LS6)	12	12551187
155.	1-D13	0.137	HOUSING, CR/SHF RR OIL SEAL	97-01	Y (LS1)	1	12559287
	1-D13	0.137	HOUSING, CR/SHF RR OIL SEAL	01	Y (LS6)	1	12559287
156.	1-D16	0.539	BEARING, CM/SHF (#1, #5)	97-01	Y (LS1)	2	12453167
	1-D16	0.539	BEARING, CM/SHF (#2, #4)	97-01	Y (LS1)	2	12453166
	1-D16	0.539	BEARING, CM/SHF (#3)	97-01	Y (LS1)	1	12453169
	1-D16	0.539	BEARING, CM/SHF (#1, #5)	01	Y (LS6)	2	12453187
	1-D18	0.539	BEARING, CM/SHF (#2, #4)	01	Y (LS6)	2	12453169
	1-D16	0.539	BEARING, CM/SHF (#3)	01	Y (LS6)	1	12453169
157.	1-D16	0.529	RETAINER, CM/SHF	97-01	Y (LS1)	1	12556437
	1-D16	0.529	RETAINER, CM/SHF	01	Y (LS6)	1	12556437
158.		8.900	BOLT, HFH, M8X1.25X20, 17THD, 18OD (CM/SHF RET)	97-01		4	11515758
159.	1-D19	0.724	CHAIN, CM/SHF TMG	97-01	Y (LS1)	1	12552954
	1-D19	0.724	CHAIN, CM/SHF TMG	01	Y (LS6)	1	12552954
160.	1-D19	0.738	BOLT, CM/SHF SPKT (M8X1.25X24.4) (20 THD) (0.056)	97-01	Y (LS1)	3	12556127
	1-D19	0.738	BOLT, CM/SHF SPKT (M8X1.25X24.4) (20 THD) (0.056)	01	Y (LS6)	3	12556127
161.	1-D19	0.736	SPROCKET, CM/SHF (0.728)	97-01	Y (LS1)	1	12552953
	1-D19	0.736	SPROCKET, CM/SHF (0.728)	01	Y (LS6)	1	12552953
162.	1-D19	0.738	PIN, CM/SHF SPKT LOC (1/4 X 5/8) (8.939)	97-01	Y (LS1)	1	12554553
	1-D19	0.738	PIN, CM/SHF SPKT LOC (1/4 X 5/8) (8.939)	01	Y (LS6)	1	12554553
163.	1-D18	0.519	CAMSHAFT, ENG	97-99	Y (LS1)	1	12560984
	1-D16	0.519	CAMSHAFT, ENG	00	Y (LS1)	1	12560988
	1-D18	0.519	CAMSHAFT, ENG	01	Y (LS6)	1	12560950
	1-D18	0.519	CAMSHAFT, ENG	01	Y (LS1)	1	12561721
168.		8.970	PLUG, CUP 5/8 HOLE CORROSION RESISTANT STL PL (ENG BLK OIL GAL)	97-01	(LS1)	1	9427693
167.		N.S.	PIN, FLYWHL LOC (PART OF 129)				
168.	1-D12	0.034	PLUG, ENG BLK COOL DRN HOLE (M16X1.5X6G) (STEEL, ZIVC 4345M, USE T/W SEALER 12346004 (OR EQUIV))	97-01	Y (LS1)	1	21007339

cardiagn.com

	1-D12	0.034	**PLUG**, ENG BLK COOL DRN HOLE (M16X1.5X6G) (STEEL, ZIVC 4345M, USE T/W SEALER 12346004 (OR EQUIV))	01	Y (LS6)	1	21007339
169.	1-D12	0.034	**PLUG**, ENG BLK COOL DRN HOLE (LEFT SIDE ONLY) (M28X1.25X12.4)	97-01	Y (LS1)	LH	12561663
	1-D12	0.034	**PLUG**, ENG BLK COOL DRN HOLE (LEFT SIDE ONLY) (M28X1.25X12.4)	01	Y (LS6)	LH	12561663
170.	1-E14	1.531	**PLUG**, ENG BLK OIL GAL (M16X1.5X6G) (STEEL, ZIVC 4345M, USE T/W SEALER 12346004 (OR EQUIV)) (0.034) ..	97	Y (LS1)	1	21007339
	1-E14	1.531	**PLUG**, ENG BLK OIL GAL (M16X1.5X6G) (STEEL, ZIVC 4345M, USE T/W SEALER 12346004 (OR EQUIV)) (0.034) ..	98-00	Y (LS1)	1	21007339
	1-E14	1.531	**PLUG**, ENG BLK OIL GAL (M16X1.5X6G) (STEEL, ZIVC 4345M, USE T/W SEALER 12346004 (OR EQUIV)) (0.034) ..	01	Y (LS1, LS6)	1	21007339
171.		8.900	**BOLT**, HFH, M8X1.25X20, 17THD, 18OD (CR/SHF POSN SEN)	97-01	.....	1	11515756
172.	1-M22	2.383	**SENSOR**, CR/SHF POSN (INCL ITEM#173) (AC-DELCO #213-354)	97-01	Y (LS1)	1	12560228
	1-M22	2.383	**SENSOR**, CR/SHF POSN (INCL ITEM#173) (AC-DELCO #213-354)	01	Y (LS6)	1	12560228
	1-M22	2.383	**CONNECTOR**, SEN-CR/SHF POSN (BLACK) (3-WAY F) (W/LEADS) (2.535) (AC-DELCO #PT117)	97-99	Y	1	12085495
	1-M22	2.383	**CONNECTOR**, SEN-CR/SHF POSN (BLACK) (3-WAY F) (W/LEADS) (2.535) (AC-DELCO #PT117)	00-01	Y (LS1)	1	12085495
	1-M22	2.363	**CONNECTOR**, SEN-CR/SHF POSN (BLACK) (3-WAY F) (W/LEADS) (2.535) (AC-DELCO #PT117)	01	Y (LS6)	1	12085495
173.		N.S.	**SEAL**, O-RING CR/SHF POSN (PART OF ITEM #172		.....		
174.	1-D20	0.882	**BOLT**, CLU PRESS PLT (HFH M10X1.5X25 10.9 7114M HDR PT, 17.3 FLANGE)	97-01	Y (LS1)	6	12561465
	1-D20	0.882	**BOLT**, CLU PRESS PLT (HFH M10X1.5X25 10.9 7114M HDR PT, 17.3 FLANGE)	01	Y (LS6)	6	12561465
179.	1-D12	0.056	**BOLT**, CR/SHF BRG CAP (M8X1.25X24.4) (20 THD)	97	Y (LS1)	10	12556127
	1-D12	0.056	**BOLT**, CR/SHF BRG CAP (M8X1.25X24.4) (20 THD)	98-00	Y (LS1)	10	12556127
	1-D12	0.056	**BOLT**, CR/SHF BRG CAP (M8X1.25X24.4) (20 THD)	01	Y (LS1, LS8)	10	12556127
180.		N.S.	**RING**, CR/SHF POSN SEN EXCITOR (PART OF ITEM #149) .		.....		

cardiagn.com

							1Y00-050
181.	1-D17	0.648	**PLUG**, CR/SHF HOLE (25.68 MM O.D.) (EXPN CUP) (0.293)	97-99	Y (LS1)	1	10044811
		6.970	**PLUG**, EXPANSION PLUG CUP SHAPE 1" STEEL (CR/SHF HOLE)	97-01	.....	AR	9427698

RPO DEFINITIONS
LS1 -- ENGINE GAS, 8 CYL, 5.7L, SFI, ALUMINUM ENGINE
LS6 -- ENGINE GAS, 8 CYL, 5.7L, SFI, ALUMINUM ENGINE, HIGH OUTPUT
MM6 -- TRANSMISSION MAN 6 SPD, BORG WARNER, 85MM, 1ST 2.66, 6TH 0.50, O/D
M12 -- TRANSMISSION MAN 6 SPD, TREMEC, 85MM, 1ST 2.97, 6TH 0.57, O/D
M30 -- TRANSMISSION,AUTOMATIC 4 SPEED,4L60E,ELECTRONIC

cardiagn.com

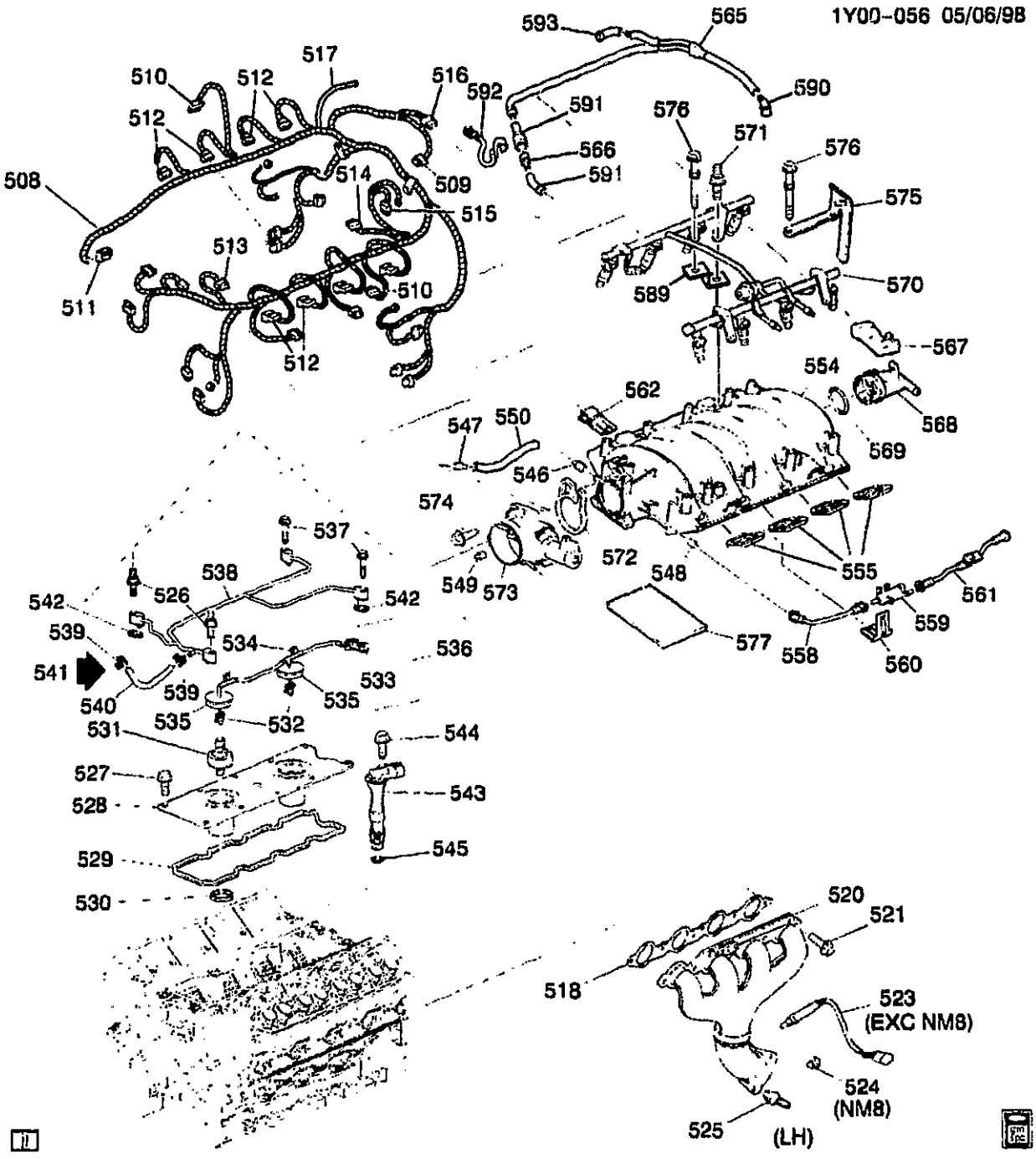

1Y00-056

1999-2000 Y ENGINE ASM-5.7L V8 PART 5 MANIFOLDS AND FUEL RELATED PARTS (LS1/5.7G)

508.	1-N15	2.525	HARNESS, ENG WRG	99-00	Y (MM6) (EXC VD1) ...	1	12189523
	1-N15	2.525	HARNESS, ENG WRG	99-00	Y (M30)	1	12189524
	1-N15	2.525	HARNESS, ENG WRG (ENHANCE EVAP EMISS)	99-00	Y (MM6, VD1) (EXPORT)	1	12189911

cardiagn.com

							1Y00-056
509.	1-M22	2.383	**CONNECTOR**, SEN-CM/SHF POSN (PART OF 508) (BLACK) (3-WAY F) (W/LEADS) (2.535) (AC-DELCO #PT117)	99-00	Y (LS1)	1	12085495
510.			**CONNECTOR**, MDL-ELEK IGN CONT (8.965) (AC-DELCO #PT381)	99-00	.....	1	12102754
511.	1-N23	3.339	**CONNECTOR**, SEN-THROT POSN (6-WAY F) (W/LEADS) (WIRE CAVITIES CAN BE PLUGGED W/12085266) (2.383) (AC-DELCO #PT787)	99-00	Y	1	12167121
512.	1-N13	2.483	**CONNECTOR**, INJR-FUEL (2-WAY F) (W/LEADS) (2.535) (AC-DELCO #PT113)	99	Y	8	12085491
	1-N13	2.483	**CONNECTOR**, INJR-FUEL (2-WAY F) (W/LEADS) (2.535) (AC-DELCO #PT113)	00	Y (LS1, MM6, M30)	8	12085491
513.	1-N23	3.454	**CONNECTOR**, MOT-THROT ACTR (BLACK) (2-WAY M) (W/LEADS) (13.090) (AC-DELCO #PT288)	99-00	Y (LS1)	1	12116247
514.	1-N15	2.530	**CONNECTOR**, INLINE-TO KNOCK SEN (PART OF 508) (BLACK) (2-WAY F W/LEADS) (3.670) (AC-DELCO #PT374) ...	99-00	Y (LS1)	1	12102747
515.	1-E13	1.516	**CONNECTOR**, SEN-ENG OIL LVL (BLACK) (2-WAY F W/LEADS) (3.670) (AC-DELCO #PT374)	99-00	Y	2	12102747
516.	1-N24	3.682	**CONNECTOR**, SEN-MAP (GRAY) (3-WAY F)	99-00	Y (LS1)	1	12129946
517.	1-N27	9.281	**HOSE**, HTR & A/C CONT VAC TK (HOSE, VAC .HVAC PORT) (ENG HARN SECTION)	99-00	Y (LS1)	1	12124136
518.	1-N21	3.272	**GASKET**, EXH MANIF (*KIT1) (3.270)	99-00	Y (LS1)	2	12558573
520.	1-N23	3.601	**MANIFOLD**, EXH (INCLS 524, 525)	99	Y (LS1)	LH	12561308
	1-N23	3.601	**MANIFOLD**, EXH (INCLS 524, 525)	99	Y (LS1)	RH	12561309
	1-N23	3.601	**MANIFOLD**, EXH (INCLS 524, 525)	00	Y (LS1)	LH	12562638
	1-N23	3.601	**MANIFOLD**, EXH (INCLS 524, 525)	00	Y (LS1)	RH	12562639
521.	1-N21	3.275	**BOLT**, EXH MANIF	99-00	Y (LS1)	12	12560206
523.	1-N24	3.682	**SENSOR**, HTD OXY (AC-DELCO #AFS75)	99-00	Y (LS1)	1	25312184
524.		8.971	**PLUG-EXT**, M18X1.5X10 TAPPERED 1:16, 19 OD, 22 OAL, SAE 1010/1012 (OXY SEN HOLE)	99-00	Y (LS1)	1	25509274
525.	1-N23	3.613	**STUD**, EXH PIPE (HFH, M10X1.5X34, 22 THD, M10X1.5X16, 14 THD, 20.8 OD, 5.8, 6164M, 64 OAL)	99-00	Y (LS1)	6	12561310
526.	1-E8	1.097	**STUD**, ENG COOL AIR BL PIPE ..	99-00	Y (LS1)	2	12561089

cardiagn.com

								1Y00-056
527.		8.900	**BOLT**, HWH, M8X1.25X32, 22.9 THD, 9.8, PS (BOLT, ENG BLK VALLEY CVR- (PART OF 528) ...	99-00	Y (LS1)	.....	10	12551187
528.	1-N21	3.265	**COVER**, ENG BLK VALLEY (INCLS 527, 529, 530)	99-00	Y (LS1)	.....	1	12561106
529.	1-N21	3.270	**GASKET**, ENG BLK VALLEY CVR (PART OF 528)	99-00	Y (LS1)	.....	1	12558178
530.	1-M22	2.383	**GROMMET**, KNOCK SEN (PART OF 528)	99-00	Y (LS1)	.....	2	12558177
531.	1-M22	2.383	**SENSOR**, KNOCK (W/(LOCATING TAB) (AC-DELCO #213-362)	99-00	Y (LS1)	.....	2	10456603
532.	1-M22	2.383	**CONNECTOR**, SEN-KNOCK (PART OF 536) (1-WAY M, W/LEADS, HIGH TEMP) (1.150) (AC-DELCO #PT727)	99-00	Y (LS1)	.....	2	12126456
533.	1-N15	2.530	**CONNECTOR**, INLINE-TO ENG HARN (PART OF 536) (BLACK) (2-WAY M) (W/LEADS) (4.720) (AC-DELCO #PT786)	99-00	Y (LS1)	.....	1	12167120
534.		N.S.	**CLIP**, HARNESS KNOCK SENSOR JUMPER (PART OF 536	99-00	Y (LS1)	.....	2	
535.		N.S.	**GROMMET**, KNOCK SENSOR (PART OF 536	99-00	Y (LS1)	.....	2	12554408
536.	1-M23	2.480	**WIRE**, KNOCK SEN (INCLS 532, 533, 534, 535)	99-00	Y (LS1)	.....	1	15372170
537.		8.900	**BOLT**, METRIC HEX FLG HD (M6X1X30) (POR 9.8) (ENG COOL AIR BL PIPE)	99-00	.....		4	11514008
538.	1-E8	1.097	**PIPE**, ENG COOL AIR BL (INCLS 539, 541, 542)	99	Y (LS1)	.....	1	12557538
	1-E8	1.097	**PIPE**, ENG COOL AIR BL (INCLS 539, 541, 542)	00	Y (LS1)	.....	1	12562169
539.		8.948	**CLAMP**, SPRG BAND, 14.2MM, 9/16 OD HOSE, POR (ENG COOL AIR BL (PART OF 538)	99-00	(LS1)	.....	2	25526358
		8.948	**CLAMP**, SPRG BAND, 14.2MM, 9/16 OD HOSE, POR (CLAMP, ENG COOL AIR BL HOSE) (PART OF 538)	99-00	Y	.....	AR	25526356
540.	1-E8	1.097	**HOSE**, ENG COOL AIR BL (PART OF 538)	99	Y (LS1)	.....	1	12556443
	1-E8	1.097	**HOSE**, ENG COOL AIR BL (PART OF 538)	00	Y (LS1)	.....	1	12562165
541.		8.600	**LUBRICANT**, RUBBER 5 GAL (LUBRICANT, ENG COOL AIR BL HOSE)	99-00	.....		AR	12345884
542.	1-E8	1.097	**SEAL**, ENG COOL AIR BL PIPE (O RING) (PART OF 538)	99-00	Y (LS1)	.....	4	12551933
		8.600	**LUBRICANT**, RUBBER 5 GAL (NOTE:APPLY TO SEAL (542)	99-00	Y (LS1)	.....	AR	12345884
543.	1-M22	2.383	**SENSOR**, CM/SHF POSN (INCL 545) (AC-DELCO #213-363) ...	99-00	Y (LS1)	.....	1	12561211
	1-M22	2.383	**CONNECTOR**, SEN-CM/SHF POSN (BLACK) (3-WAY F) (W/LEADS) (2.535) (AC-DELCO #PT117)	99-00	Y (LS1)	.....	1	12085495

cardiagn.com

							1Y00-056	
544.		8.900	**BOLT**, HFH. M8X1.25X20, 17THD, 18OD (BOLT, CR/SHF POSN SEN)	99-00			1	11515756
545.		N.S.	**SEAL**, CM/SHF POSN SEN HOLE PLUG (O RING) (PART OF 543)				1	
546.		N.S.	**CONNECTOR**, PCV CR/CASE VENT (PART OF 554		Y		1	
547.		N.S.	**CONNECTOR**, PCV FRESH AIR TO CR/CASE (PART OF 573		Y		1	
548.		N.S.	**CONNECTOR**, PURGE PORT (PART OF 554		Y		1	
549.		N.S.	**CONNECTOR**, VAPOR VENT TUBE (PART OF 573		Y		1	
550.	1-E15	1.762	**TUBE**, PCV (FROM RIGHT SIDE ROCKER ARM COVER (VALVE COVER) CONNECTOR TO THROTTLE BODY)	99-00	Y (LS1)		1	12556454
554.	1-N21	3.265	**MANIFOLD**, INT (SERV) (SEE GROUP 3.000 "FUEL RAIL, INTAKE MANIFOLD, THROTTLE BODY "FOR DETAIL ILLUSTRATED VIEW.) (INCLS 546, 548, 568)	99-00	Y (LS1)		1	12557846
555.	1-N21	3.270	**GASKET KIT**, INT MANIF (CONTAINS 8 GASKETS)	99-00	Y (LS1)		1	12533587
558.	1-N21	3.145	**TUBE**, EVAP EMIS CNSTR PURGE (FROM THROTTLE BODY TO*VALVE, EVAP ITEM (599))	99-00	Y (LS1)		1	12552222
559.	1-N20	3.130	**VALVE**, EVAP EMIS CNSTR PURGE SOL (AC-DELCO #214-641)	99-00	Y (LS1)		1	1997278
560.	1-N20	3.130	**BRACKET**, EVAP EMIS CNSTR PURGE SOL VLV	99-00	Y (LS1)		1	12560984
561.	1-N21	3.145	**TUBE**, EVAP EMIS CNSTR PURGE (INCLUDES SERVICE PORT)	99-00	Y (LS1)		1	12562563
562.	1-E15	1.762	**RETAINER**, PCV VLV PIPE	99-00	Y (LS1)		2	12557340
565.	1-E15	1.762	**PIPE**, PCV VLV (INCLS 566, 590, 591, 592)	99-00	Y (LS1)		1	12562580
566.	1-E14	1.745	**VALVE**, PCV (PART OF 565) (AC-DELCO #CV948C)	99-00	Y (LS1)		1	25179136
567.	1-N24	3.682	**SENSOR**, MAP (W/SEAL) (AC-DELCO #213-331)	99-00	Y (LS1)		1	16212460
	1-N24	3.682	**CONNECTOR**, SEN-MAP (GRAY) (3-WAY F)	99-00	Y (LS1)		1	12129946
568.		N.S.	**PLUG**, MAP SEN HOLE (PART OF 554) (INCLS 569)					
569.		N.S.	**SEAL**, MAP SEN HOLE PLUG (O RING) (PART OF 568)					
570.	1-N22	3.330	**RAIL**, SEQ M/PORT F/INJN FUEL (SEE GROUP 3.000 "RAIL" FOR DETAIL ILLUSTRATED VIEW.)	99-00	Y (LS1)		1	12561858
571.	1-N22	3.330	**STUD**, F/INJN FUEL RL (HFH 6X1X18.5X14 W/ADH, 6X1X14, 39.1 OAL, 14.2 OD, 9.8, 7114M) (AC-DELCO #12554211)	99-00	Y (LS1)		4	12554211
572.	1-N22	3.336	**SEAL**, THROT BODY	99-00	Y (LS1)		1	12552542

cardiagn.com

							1Y00-056
573.	1-N22	3.335	**BODY**, THROT (SEE GROUP 3.000 "BODY, THROT"FOR DETAIL ILLUSTRATED VIEW. (INCLS 547, 549) (AC-DELCO #17113564)	99	Y (LS1)	1	17113564
	1-N22	3.335	**BODY**, THROT (INCLS:THROTTLE BODY SENSOR POSITION) (SEE GROUP 3.000 "BODY, THROT"FOR DETAIL ILLUSTRATED VIEW. (INCLS 547, 549)	00	Y (LS1)	1	17113669
574.		8.900	**BOLT**, METRIC HEX FLG HD (M6X1X30) (POR 9.8) (THROT BODY)	99-00	.....	3	11514008
575.	1-N22	3.330	**BRACKET**, F/INJN FUEL RL (ON INTAKE MANIFOLD BEHIND FUEL RAIL-STOP)	99-00	Y (LS1)	LH	12556074
576.	1-N21	3.275	**BOLT**, INT MANIF (W/FLAT WASHER) (M6X1.0X21.8, 13.6 OD, GM500M, ZF, MACH, ADHES)	99-00	Y (LS1)	10	12552344
577.	1-N21	3.270	**SEAL**, INT MANIF	99-00	Y (LS1)	2	12560251
589.	1-N22	3.330	**BRACKET**, F/INJN FUEL RL (90 DEG "S" TYPE BRKT) (GROUND STRAP))	99-00	Y (LS1)	RH	12560384
590.		N.S.	**ELBOW**, PCV VLV		.....		
591.		N.S.	**PIPE**, PCV VLV (PART OF 565) ...		.....		
592.		N.S.	**STRAP**, PCV HARN (PART OF 565)		.....		
593.		N.S.	**ELBOW**, PCV VLV (PART OF 565)		.....		

SERVICE KITS

1.	1-D13	0.289	**GASKET KIT**, CYL HD (REF TO CATLG GRP NOTE #1) (INCLS KIT CONTAINS: GASKETS FOR CYLINDER HEAD, INTAKE AND EXHAUST MANIFOLDS, SEAL-ENG COOL AIR BL PIPE (O-RING)	99-00	Y (LS1)	1	12453264

RPO DEFINITIONS

LS1 – ENGINE GAS, 6 CYL, 5.7L, SFI, ALUMINUM ENGINE
MM6 – TRANSMISSION MAN 6 SPD, BORG WARNER, 85MM, 1ST 2.66, 6TH 0.50, O/D
M30 – TRANSMISSION,AUTOMATIC 4 SPEED,4L60E,ELECTRONIC
VD1 – PROVISION OPTIONS,EUROPE(EXPORT)

cardiagn.com

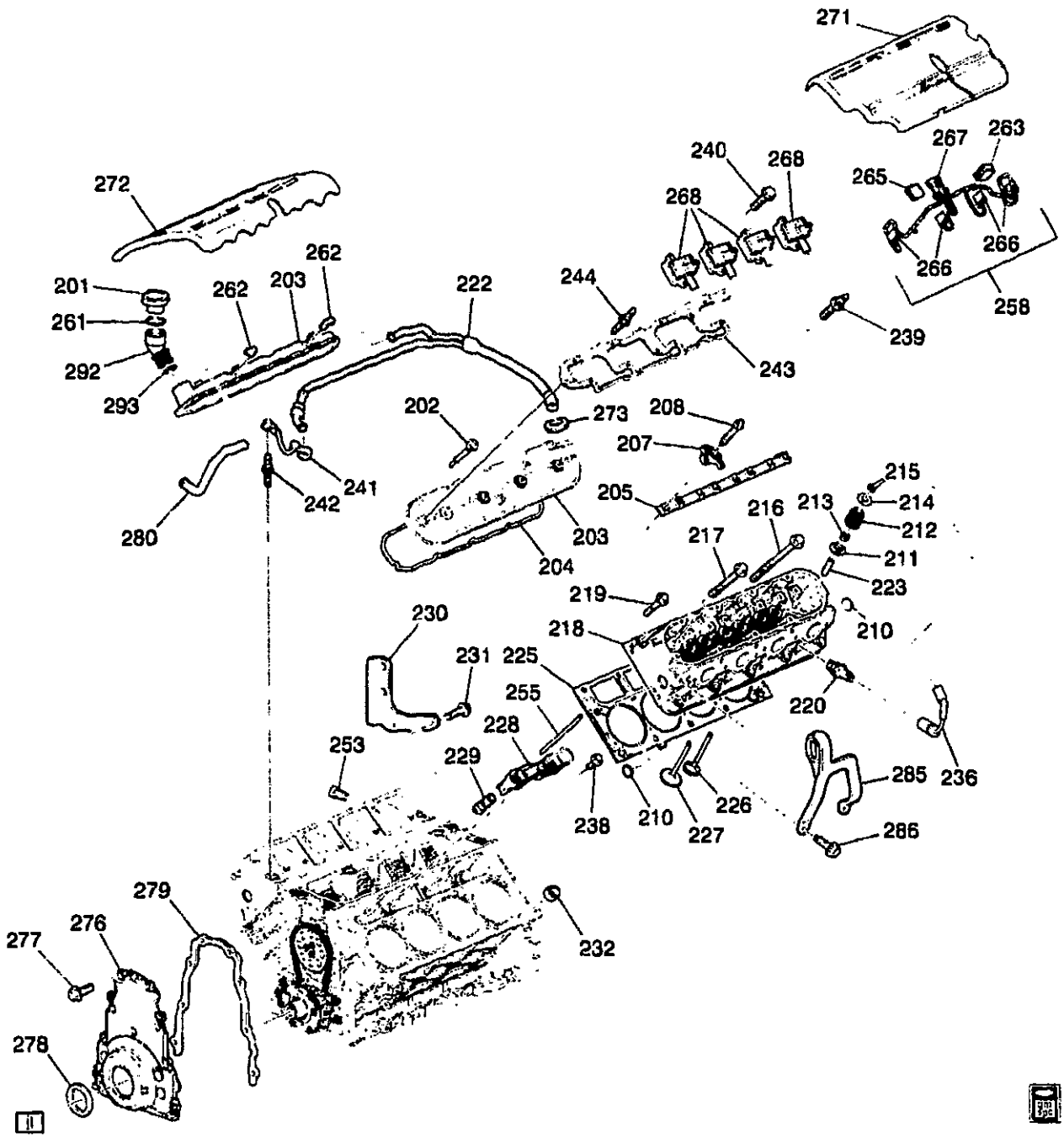

1Y00-055

1999-2001 Y ENGINE ASM-5.7L V8 PART 2 CYLINDER HEAD AND RELATED PARTS (LS1/5.7G)

201.	1-E15	1.758	CAP, OIL FIL (INCL 261) ("MOBIL 1") (WITH SEAL) (AC-DELCO #RC73)	99-01	Y (LS1)	1	12558685
202.	1-D15	0.413	BOLT, VLV RKR ARM CVR (W/GROMMET)	99-01	Y (LS1)	6	12558883

cardiagn.com

							1Y00-055
203.	1-D15	0.386	COVER, VLV RKR ARM (INCLS 202, 204, 262)	99-00	Y (LS1)	LH	12559894
	1-D15	0.386	COVER, VLV RKR ARM (INCLS 202, 204, 262)	01	Y (LS1)	LH	12561820
	1-D15	0.386	COVER, VLV RKR ARM (INCLS 202, 204, 273)	99-00	Y (LS1)	RH	12562404
	1-D15	0.386	COVER, VLV RKR ARM (INCLS 202, 204, 273) (THREE RAISED BOSS AREA)	01	Y (LS1)	RH	12561818
204.	1-D15	0.423	GASKET, VLV RKR ARM CVR (*KIT1)	99-01	Y (LS1)	2	12560696
205.	1-D16	0.429	SUPPORT, VLV RKR ARM PIV	99-01	Y (LS1)	2	12552203
207.	1-D15	0.333	ARM, VLV RKR	99-01	Y (LS1)	16	10214664
208.	1-D15	0.349	BOLT, VLV RKR ARM PIV SUPT	99-01	Y (LS1)	16	12560961
210.	1-D14	0.293	PLUG, CYL HD CORE HOLE (CUP, 32.03X7.87X1.47, 1010, 6199-M)	99-00	Y (LS1)	4	1647542
	1-D14	0.293	PLUG, CYL HD CORE HOLE (CUP, 32.03X7.87X1.47, 1010, 6199-M)	01	Y (LS1)	4	1647542
211.	1-D14	0.303	SHIM, VLV SPR	99	Y (LS1)	16	12551143
	1-D14	0.303	SHIM, VLV SPR	00-01	Y (LS1)	16	12565118
212.	1-D14	0.303	SPRING, VLV	99-01	Y (LS1)	16	12553698
213.	1-D14	0.308	SEAL KIT, EXH VLV STEM OIL (14.4MM) (INCLS (8) SEALS)	99-01	Y (LS1)	1	12457652
	1-D14	0.308	SEAL KIT, INT VLV STEM OIL (INCLS (8) SEALS)	99-01	Y (LS1)	1	12533586
214.	1-D15	0.309	CAP, VLV SPR	99-01	Y (LS1)	16	10166344
215.	1-D15	0.310	KEY, VLV STEM	99-01	Y (LS1)	32	10166345
216.	1-D14	0.293	BOLT, CYL HD (M11X2.0X155.0-6G THD) (W/ADHES PATCH)	99-00	Y (LS1)	16	12560744
	1-D14	0.293	BOLT, CYL HD (M11X2.0X155.0-6G THD) (W/ADHES PATCH)	01	Y (LS1)	16	12560744
217.	1-D14	0.293	BOLT, CYL HD (M11X2.0X100.0-6G THD) (W/ADHES PATCH)	99-00	Y (LS1)	4	12560745
	1-D14	0.293	BOLT, CYL HD (M11X2.0X100.0-6G THD) (W/ADHES PATCH)	01	Y (LS1)	4	12560745
218.	1-D13	0.269	HEAD, CYL	99-01	Y (LS1)	2	12559855
219.	1-D14	0.293	BOLT, CYL HD (SHORT) (8X1.25X45)	99-00	Y (LS1)	10	12558840
	1-D14	0.293	BOLT, CYL HD (SHORT) (8X1.25X45)	01	Y (LS1)	10	12558840
220.	1-M21	2.270	SPARK PLUG, (AC-DELCO #41-974)	99-01	Y (LS1)	8	12563707
222.	1-E15	1.762	PIPE, PCV VLV	99-01	Y (LS1)	1	12562580
223.		N.S.	GUIDE, VLV (PART OF 218)				
225.	1-D13	0.289	GASKET, CYL HD (*KIT1)	99-01	Y (LS1)	RH	12558809
	1-D13	0.289	GASKET, CYL HD (*KIT1)	99-01	Y (LS1)	LH	12558810
226.	1-D14	0.297	VALVE, EXH (STD)	99-01	Y (LS1)	8	12555907
	1-D14	0.297	VALVE, EXH (0.015" O.S.)	99-01	Y (LS1)	8	12562954
227.	1-D14	0.296	VALVE, INT (0.015" O.S.)	99-01	Y (LS1)	8	12562952
	1-D14	0.296	VALVE, INT (STD)	99-01	Y (LS1)	8	12563083

cardiagn.com

						1Y00-055	
228.	1-D16	0.439	GUIDE, VLV LFTR (ACCOMODATES 4 VLV LFTRS EACH)	99-01	Y (LS1)	4	12551162
229.	1-D16	0.459	LIFTER, VLV (AC-DELCO #HL124)	99-01	Y (LS1)	16	17122490
230.		N.S.	BRACKET, ENG LIFT RR			1	
231.		6.900	BOLT, HFH, M10X1.5X35, 32THD, 22.3 OD, 10.9, 7114M, MACH (ENG LIFT BRKT RR)	99-01		2	11515767
232.	1-D14	0.293	PIN, CYL HD LOC (1/2 X 5/8 O.D.)	99-00	Y (LS1)	4	12556081
	1-D14	0.293	PIN, CYL HD LOC (1/2 X 5/8 O.D.)	01	Y (LS1)	4	12556081
236.	1-M21	2.240	WIRE, SPLG (POS #1-#8) (STYLE 8DDD) (7.8" LONG) (2.239) (AC-DELCO #348S)	99-01	Y (LS1)	8	12192064
238.	1-D16	0.459	BOLT, VLV LFTR GDE (HFH M6X1.0X19, 13 THD, 10.9, GM4435M, MACH, DOG PT & SHOULDER)	99-01	Y (LS1)	4	12551163
239.	1-M21	2.183	STUD, IGN COIL (HFH, M6X1.0X40, SPECIAL HD)	99	Y (LS1)	9	12557539
	1-M21	2.183	STUD, IGN COIL (HFH 6X1X18.5X14 W/ADH, 6X1X14, 39.1 OAL, 14.2 OD, 9.8, 7114M) (3.330) (AC-DELCO #12554211)	99-00	Y (LS1)	10	12554211
	1-M21	2.183	STUD, IGN COIL (HFH 6X1X18.5X14 W/ADH, 6X1X14, 39.1 OAL, 14.2 OD, 9.8, 7114M) (3.330) (AC-DELCO #12554211)	01	Y (LS1)	10	12554211
240.	1-M21	2.183	BOLT, IGN COIL (14.865)	99-00	Y (LS1)	4	10258914
	1-M21	2.183	BOLT, IGN COIL (14.865)	01	Y (LS1)	4	10258914
241.		N.S.	STRAP, PCV HARN				
242.	1-E8	1.097	STUD, ENG COOL AIR BL PIPE	99-01	Y (LS1)	2	12561069
243.	1-M21	2.183	BRACKET, IGN COIL (AC-DELCO #12562864)	99-00	Y (LS1)	1	12562864
	1-M21	2.183	BRACKET, IGN COIL (AC-DELCO #12563288)	01	Y (LS1)	1	12563288
244.	1-M21	2.183	STUD, IGN COIL BRKT (HFH 6X1X18.5X14 W/ADH, 6X1X14, 39.1 OAL, 14.2 OD, 9.8, 7114M) (3.330) (AC-DELCO #12554211)	99-01	Y (LS1)	10	12554211
253.	1-D14	0.293	PLUG, CYL HD CORE HOLE (THREADED)	99-01	Y (LS1)	1	12553191
255.	1-D15	0.426	ROD, VLV PUSH	99-01	Y (LS1)	16	10238852
256.	1-M21	2.240	WIRE, IGN COIL (INCLS 263, 265, 266, 267, 269) (W/CLIP) (AC-DELCO #12562863)	99-00	Y (LS1)	1	12562863
	1-M21	2.240	WIRE, IGN COIL (INCLS 263, 265, 266, 267, 269) (W/CLIP)	01	Y (LS1)	1	12569111
261.		N.S.	SEAL, O-RING FIL (PART OF ITEM #201				
262.		N.S.	ELBOW, PCV (PART OF ITEM #203)				
263.		N.S.	CLIP, IGN COIL WIRE (PART OF 256)				
265.		N.S.	CLIP, WRG HARN (PART OF 267)				

cardiagn.com

							1Y00-055
266.	1-M21	2.170	**CONNECTOR**, COIL-IGN (4-WAY F) (W/LEADS, IN A ROW) (4.651) (AC-DELCO #PT368)	99-01	Y (LS1)	8	12102741
267.	1-N15	2.530	**CONNECTOR**, INLINE-TO ENG HARN (INCL 265) (7-WAY M, W/LEADS) (AC- DELCO #PT261)	99-00	Y (LS1)	1	12102490
	1-N15	2.530	**CONNECTOR**, INLINE-TO ENG HARN (7-WAY M, W/LEADS) (AC-DELCO #PT281)	01	Y (LS1)	1	12102490
268.	1-M21	2.170	**COIL**, IGN (AC-DELCO #D580) .	99-01	Y (LS1)	8	12558948
271.	1-N22	3.330	**COVER**, F/INJN FUEL RL	99-01	Y (LS1)	LH	12561503
272.	1-N22	3.330	**COVER**, F/INJN FUEL RL	99-01	Y (LS1)	RH	12561502
273.	1-E14	1.745	**GROMMET**, PCV VLV (PART OF 203)	99-01	Y (LS1)	1	10198949
276.	1-D13	0.206	**COVER**, ENG FRT (INCLS CVR, SEAL, GSKT, BOLT)	99-01	Y (LS1)	1	12561243
277.	1-D13	0.137	**BOLT**, CR/SHF RR OIL SEAL HSG (M8X1.25X30, 28 THD, 18 OD, 10.9, 7114M, MACH) (8.900)	99	Y (LS1)	12	11515758
	1-D13	0.137	**BOLT**, CR/SHF RR OIL SEAL HSG (HFH M8X1.25X30, 23.65 THD, 10.9, PZ GM7114M, MACH) (8.900)	99-01	Y (LS1)	12	12551187
278.	1-D13	0.213	**SEAL**, CR/SHF FRT OIL	99-01	Y (LS1)	1	12561244
279.	1-D13	0.207	**GASKET**, ENG FRT CVR	99-01	Y (LS1)	1	12558013
280.	1-E15	1.762	**TUBE**, PCV (FROM RIGHT SIDE ROCKER ARM COVER (VALVE COVER) CONNECTOR TO THROTTLE BODY)	99-01	Y (LS1)	1	12556454
285.		N.S.	**BRACKET**, ENG LIFT FRT		.....		
286.		8.900	**BOLT**, HFH, M10X1.5X35, 32THD, 22.3 OD, 10.9, 7114M, MACH (ENG LIFT BRKT)	99-01	.....	2	11515767
292.	1-E14	1.745	**TUBE**, OIL FIL (INCLS 293)	99-01	Y (LS1)	1	12559505
293.		N.S.	**SEAL**, O-RING FIL (PART OF ITEM #292		.....		

SERVICE KITS

1.	1-D13	0.289	**GASKET KIT**, CYL HD (REF TO CATLG GRP NOTE #1) (INCL 204, 225) (KIT INCLUDES: GASKETS FOR CYLINDER HEAD, INTAKE AND EXHAUST MANIFOLD, VALVE COVERS AND SEAL, ENG COOL AIR BL PIPE (O-RING)	99-00	Y (LS1)	1	12453264

RPO DEFINITIONS

LS1 – ENGINE GAS, 8 CYL, 5.7L, SFI, ALUMINUM ENGINE

cardiagn.com

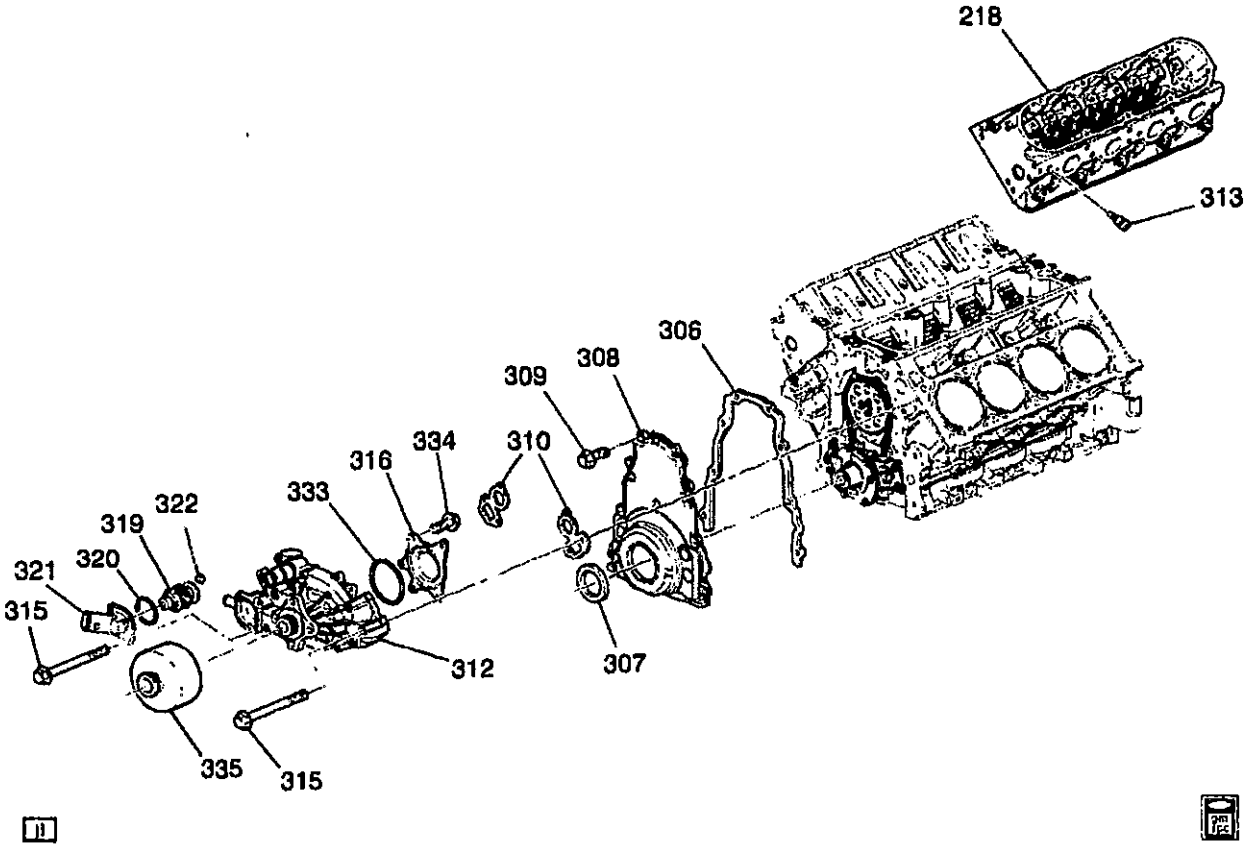

1Y00-057

1999-2001 Y ENGINE ASM-5.7L V8 PART 3 FRONT COVER & COOLING (LS1/5.7G)
2001 Y ENGINE ASM-5.7L V8 PART 3 FRONT COVER & COOLING (LS6/5.7S)

218.	1-D13	0.269	**HEAD**, CYL	99-01	Y (LS1)	2	12559855
	1-D13	0.269	**HEAD**, CYL (INCLS HEAD, GUIDES, SEAT, PLUG)	01	Y (LS6)	2	12560801
306.	1-D13	0.207	**GASKET**, ENG FRT CVR	99-01	Y (LS1)	1	12558013
	1-D13	0.207	**GASKET**, ENG FRT CVR	01	Y (LS6)	1	12558013
307.	1-D13	0.213	**SEAL**, CR/SHF FRT OIL (ALSO PART OF 308)	99-01	Y (LS1)	1	12561244
	1-D13	0.213	**SEAL**, CR/SHF FRT OIL (ALSO PART OF 308)	01	Y (LS6)	1	12561244
308.	1-D13	0.206	**COVER**, ENG FRT (INCL 304, 307) (INCLS CVR, SEAL, GSKT, BOLT)	99-01	Y (LS1)	1	12561243
	1-D13	0.206	**COVER**, ENG FRT (INCL 304, 307) (INCLS CVR, SEAL, GSKT, BOLT)	01	Y (LS6)	1	12561243
309.	1-D13	0.206	**BOLT**, ENG FRT CVR (M8X1.25X30, 28 THD, 18 OD, 10.9, 7114M, MACH) (8.900)	99	Y (LS1)	12	11515758
	1-D13	0.206	**BOLT**, ENG FRT CVR (HFH M8X1.25X30, 23.85 THD, 10.9, PZ GM7114M, MACH) (8.900)	99-01	Y (LS1)	12	12551187

cardiagn.com

	1-D13	0.206	BOLT, ENG FRT CVR (HFH M 2X .15X30, 23.85 THD, 10.9, PZ GM .14M, MACH) (8.900)	01	Y (LS6)	12	12551187
310.	1-E8	1.079	**GASKET**, W/PMP (ALSO PART OF 312)	99-01	Y (LS1)	1	12559271
	1-E8	1.079	**GASKET**, W/PMP (ALSO PART OF 312)	01	Y (LS6)	1	12559271
312.	1-E8	1.069	**PUMP KIT**, WAT (INCLS 310, 316, 335) (LESS PRESS-ON STYLE PULLEY) (AC-DELCO #251-602)	99	Y (LS1)	1	12456112
	1-E8	1.069	**PUMP KIT**, WAT (INCLS 310, 316, 335) (AC-DELCO #251-615)	00-01	Y (LS1)	1	12458934
	1-E8	1.069	**PUMP KIT**, WAT (INCLS 310, 316, 335) (AC-DELCO #251-615)	01	Y (LS6)	1	12458934
313.	1-N24	3.682	**SENSOR**, ENG COOL TEMP (AC-DELCO #213-794)	99-00	Y (LS1)	1	15369305
	1-N24	3.682	**SENSOR**, ENG COOL TEMP (AC-DELCO #213-953)	01	Y	1	15326388
	1-E9	1.150	**CONNECTOR**, SEN-ENG COOL TEMP (BLACK) (2-WAY F W/LEADS) (2.383) (AC-DELCO #PT169)	99-01	Y (LS1)	1	12101899
	1-E9	1.150	**CONNECTOR**, SEN-ENG COOL TEMP (BLACK) (2-WAY F W/LEADS) (3.670) (AC-DELCO #PT374)	01	Y (MM6, M30)	1	12102747
315.	1-E6	1.079	**BOLT**, W/PMP (USED W/SEALANT) (M8X1.25X82.6, 31.8 THD, 17 OD, 10.9, GM7114M MZF)	99-00	Y (LS1)	6	12551928
	1-E6	1.079	**BOLT**, W/PMP (USED W/SEALANT) (M8X1.25X82.6, 31.8 THD, 17 OD, 10.9, GM7114M MZF)	01	Y (LS1, LS6)	6	12551926
316.		N.S.	**COVER**, W/PMP (BACKPLATE) (PART OF 312)	99	Y (LS1)	1	
		N.S.	**COVER**, W/PMP (BACKPLATE) (PART OF 312)	00-01	Y (LS1)	1	
319.		N.S.	**THERMOSTAT**, ENG COOL (INCL 312, 321)				
320.	1-E9	1.123	**SEAL**, W/PMP (ALSO PART OF #319)	99-01	Y (LS1)	1	12561155
	1-E9	1.123	**SEAL**, W/PMP (ALSO PART OF #319)	01	Y (LS6)	1	12561155
321.	1-E8	1.073	**INLET**, W/PMP (INCLS 319, 322) (INCLS INLET, THERMOSTAT, SEAL, VALVE, RET)	99-01	Y (LS1)	1	12562740
	1-E8	1.073	**INLET**, W/PMP (INCLS 319, 322) (INCLS INLET, THERMOSTAT, SEAL, VALVE, RET)	01	Y (LS6)	1	12562740
322.		N.S.	**VALVE**, ENG COOL AIR BL (PART OF 321)				
333.	1-E9	1.123	**SEAL**, W/PMP CVR (O RING) (ALSO PART OF 312)	99-01	Y (LS1)	1	12551905
	1-E9	1.123	**SEAL**, W/PMP CVR (O RING) (ALSO PART OF 312)	01	Y (LS6)	1	12551905

cardiagn.com

334.	N.S.	**BOLT**, W/PMP CVR (PART OF 312) (M6X1X25)	.....
335.	N.S.	**PULLEY**, W/PMP (PRESS-ON) (PART OF 312)	.....

RPO DEFINITIONS
LS1 – ENGINE GAS, 8 CYL, 5.7L, SFI, ALUMINUM ENGINE
LS6 – ENGINE GAS, 8 CYL, 5.7L, SFI, ALUMINUM ENGINE, HIGH OUTPUT
MM6 – TRANSMISSION MAN 6 SPD, BORG WARNER, 85MM, 1ST 2.66, 6TH 0.50, O/D
M30 – TRANSMISSION,AUTOMATIC 4 SPEED,4L60E,ELECTRONIC

cardiagn.com

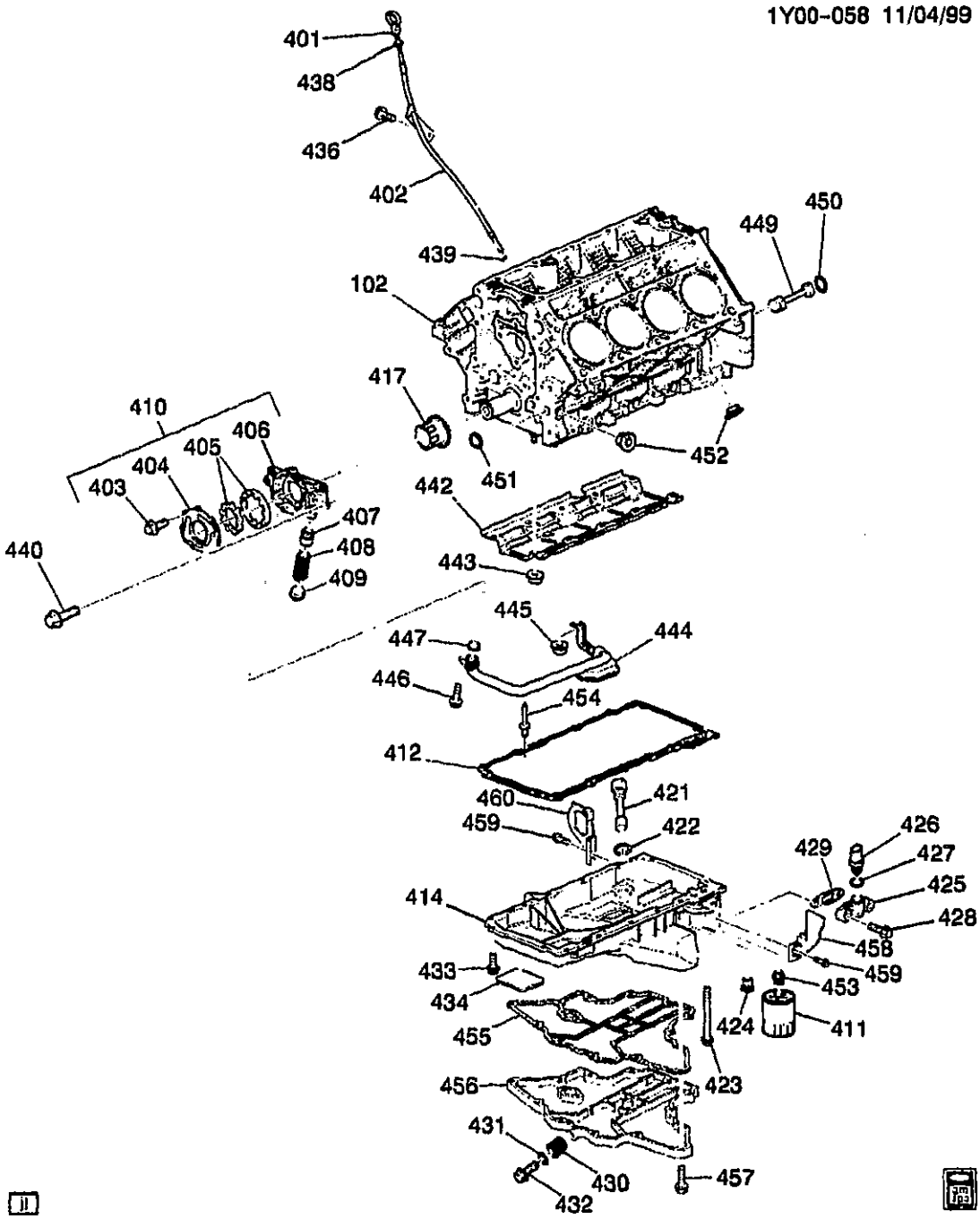

1Y00-058

2000-2001 Y ENGINE ASM-5.7L V8 PART 4 OIL PUMP, PAN & RELATED PARTS (LS1/5.7G)
2001 Y ENGINE ASM-5.7L V8 PART 4 OIL PUMP, PAN & RELATED PARTS (LS6/5.7S)

102.		N.S.	BLOCK, ENG	.....		
401.	1-E13	1.516	INDICATOR, OIL LVL (USED WITH GULL WING OIL PAN)	01 Y (LS1)	1	12561712
	1-E13	1.516	INDICATOR, OIL LVL (USED WITH GULL WING OIL PAN)	01 Y (LS6)	1	12561712

cardiagn.com

							1Y00-058
	1-E13	1.516	**INDICATOR**, OIL LVL (USED W/ 2-PIECE O/PAN.)	00	Y (LS1)	1	12562468
402.	1-E13	1.516	**TUBE**, OIL LVL IND (INCL #439)	00	Y (LS1)	1	12556405
	1-E13	1.516	**TUBE**, OIL LVL IND (INCL #439)	01	Y (LS1)	1	12563817
	1-E13	1.516	**TUBE**, OIL LVL IND (INCL #439)	01	Y (LS6)	1	12563817
403.		8.977	**SCREW**, M6X1X20, 12.7 OD, 6202M, PO (O/PMP DRV SHF) (PART OF 410)	00-01	(LS1)	7	11514300
404.		N.S.	**COVER**, O/PMP (PART OF 410)				
405.		N.S.	**GEAR SET**, O/PMP (PART OF 410)				
406.		N.S.	**HOUSING**, O/PMP (PART OF 410)				
407.		N.S.	**VALVE**, OIL PRESS RLF (PART OF 410)				
408.		N.S.	**SPRING**, OIL PRESS RLF VLV (PART OF 410)				
409.		N.S.	**PLUG**, OIL PRESS RLF VLV BORE (PART OF 410)				
410.	1-E14	1.652	**PUMP**, OIL (INCLS 403, 404, 405, 406, 407, 408, 409)	00-01	Y (LS1)	1	12563964
	1-E14	1.652	**PUMP**, OIL (INCLS 403, 404, 405, 406, 407, 408, 409)	01	Y (LS6)	1	12563964
411.	1-E16	1.836	**FILTER**, OIL (PF44) (AC-DELCO #PF44)	00-01	Y (LS1)	1	25010633
	1-E16	1.836	**FILTER**, OIL (AC-DELCO #SPF44)	00	Y (LS1)	1	25329388
	1-E16	1.836	**FILTER**, OIL (AC-DELCO #UPF44)	00	Y (LS1)	1	25329389
	1-E16	1.836	**FILTER**, OIL (PF44) (AC-DELCO #PF44)	01	Y (LS6)	1	25010633
412.	1-E13	1.429	**GASKET**, OIL PAN (PART OF 414)	00-01	Y (LS1)	1	12558760
	1-E13	1.429	**GASKET**, OIL PAN (PART OF 414)	01	Y (LS6)	1	12558760
414.	1-E12	1.426	**PAN**, OIL (INCLS #412, 421, 422, 423, 424, 425, 426, 427, 428, 429, 430, 431, 432, 433, 434, 454, 455, 456) (GULL-TYPE OIL PAN)	00-01	Y (LS1)	1	12561828
	1-E12	1.426	**PAN**, OIL (INCLS #412, 421, 422, 423, 424, 425, 426, 427, 428, 429, 430, 431, 432, 433, 434, 454, 455, 456) (GULL-TYPE OIL PAN)	01	Y (LS6)	1	12561828
		DISCON	**PAN**, OIL (INCLS #412, 414, 421, 422, 423, 424, 425, 426, 427, 428, 429, 430, 431, 432, 433, 434, 454, 455, 456) (NON-GULL TYPE OIL PAN--REGULAR TYPE OIL PAN)	01	Y (LS1, LS6)	1	12563329
417.	1-D19	0.728	**SPROCKET**, CR/SHF	00-01	Y (LS1)	1	12556582
	1-D19	0.728	**SPROCKET**, CR/SHF	01	Y (LS6)	1	12556582
421.	1-E13	1.516	**SWITCH**, ENG OIL LVL IND (CAUTION: (APPLY MOTOR OIL TO THREADS-DO NOT EXCEED INSTALLATION**TORQUE) (INCLS 422) (PART OF 414)	00-01	Y (LS1)	1	24507190

cardiagn.com

							1Y00-058
	1-E13	1.516	**SWITCH**, ENG OIL LVL IND (CAUTION: (APPLY MOTOR OIL TO THREADS-DO NOT EXCEED INSTALLATION**TORQUE) (INCLS 422) (PART OF 414)	01	Y (LS6)	1	24507190
		N.S.	**CONNECTOR**, SEN-ENG OIL LVL		.....		
422.	1-E13	1.516	**SEAL**, ENG OIL LVL SEN (PART OF 414, 421)	99-01	Y (LS1)	1	10151633
423.	1-E12	1.428	**BOLT**, OIL PAN (PART OF 414) (M6X1.0X136, 85 THD, 14.2 OD, 10.9, GM7114M, MACH)	00-01	Y (LS1)	2	12554990
	1-E12	1.428	**BOLT**, OIL PAN (PART OF 414) (M6X1.0X136, 85 THD, 14.2 OD, 10.9, GM7114M, MACH)	01	Y (LS6)	2	12554990
424.		1.837	**VALVE**, OIL FLTR BYPASS	00	Y (LS1)	1	25014051
425.	1-E12	1.426	**COVER**, OIL PAN (PART OF 414)	00	Y (LS1)	1	12551587
426.	1-E15	1.800	**SENSOR**, ENG OIL T/GA (INCLS #427) (PART OF 414) (3.682) (AC-DELCO #213-794)	00-01	Y (LS1)	1	15369305
	1-E15	1.800	**SENSOR**, ENG OIL T/GA (INCLS #427) (PART OF 414) (3.682) (AC-DELCO #213-794)	01	Y (LS6)	1	15369305
427.		N.S.	**GASKET**, ENG OIL TEMP (PART OF #414) (ENCAPSULATED COPPER SEALING WASHER		.....		
428.		8.900	**BOLT**, M6X1X30, POR 9.8 (OIL PAN CVR) (PART OF #414)	00-01	.....	2	11516425
429.	1-E13	1.429	**GASKET**, OIL PAN CVR (PART OF #414)	97-00	Y (LS1)	1	12553210
430.		N.S.	**INSERT**, OIL PAN DRN PLUG THD (PART OF 414)	00-01	Y (LS1)	1	
		N.S.	**INSERT**, OIL PAN DRN PLUG THD (PART OF 414)	01	Y (LS6)	1	
431.	1-E13	1.456	**SEAL**, OIL PAN DRN PLUG (O RING) (PART OF #414)	00-01	Y (LS1)	1	3536966
	1-E13	1.456	**SEAL**, OIL PAN DRN PLUG (O RING) (PART OF #414)	01	Y (LS6)	1	3536966
432.	1-E13	1.453	**PLUG**, OIL PAN DRN (PART OF 414) (M12X1.75-6G THD, 44.45MM LNG, 15MM FLG HEX HD) (W/MAGNET & SEAL)	97-00	Y (LS1)	1	24100042
433.		8.900	**BOLT**, HWH, M8X1.25X32, 22.9 THD, 9.6, PS (OIL PAN) (PART OF 414)	00-01	.....	13	12551187
	1-E12	1.428	**BOLT**, OIL PAN (PART OF 414) (HFH M8X1.25X30, 23.85 THD, 10.9, PZ GM7114M, MACH) (8.900)	00-01	Y (LS1)	13	12551187
	1-E12	1.428	**BOLT**, OIL PAN (PART OF 414) (HFH M8X1.25X30, 23.85 THD, 10.9, PZ GM7114M, MACH) (8.900)	01	Y (LS6)	13	12551187
	1-E12	1.428	**BOLT**, OIL PAN (REAR POSITIONS) (PART OF 414) (M6X1.0X136, 85 THD, 14.2 OD, 10.9, GM7114M, MACH)	00	Y (LS1)	2	12554990

cardiagn.com

						1Y00-058	
434.		N.S.	**LABEL**, OIL PAN IDENT (PART OF 414)	00-01	Y (LS1)	1	12558686
		N.S.	**LABEL**, OIL PAN IDENT (PART OF 414)	01	Y (LS6)	1	12558686
436.	1-E13	1.516	**BOLT**, OIL LVL IND TUBE (6X1X12.16) (3.602)	00-01	Y (LS1)	1	24505098
	1-E13	1.516	**BOLT**, OIL LVL IND TUBE (6X1X12.16) (3.602)	01	Y (LS6)	1	24505098
438.	1-E13	1.516	**SEAL**, OIL LVL IND (O RING) (PART OF #401) (BLACK) (6.07MM ID, 17.8MM DIA)	00-01	Y (LS1)	1	24504091
	1-E13	1.516	**SEAL**, OIL LVL IND (O RING) (PART OF #401) (BLACK) (6.07MM ID, 17.8MM DIA)	01	Y (LS6)	1	24504091
439.		N.S.	**SEAL**, OIL LVL IND TUBE O-RING (PART OF #402				
440.		8.900	**BOLT**, HWH, M8X1.25X32, 22.9 THD, 9.8, PS (O/PMP)	00-01	Y (LS1)	4	12551187
442.	1-E13	1.430	**DEFLECTOR**, CR/SHF OIL	00-01	Y (LS1)	1	12558189
	1-E13	1.430	**DEFLECTOR**, CR/SHF OIL	01	Y (LS6)	1	12558189
443.		8.917	**NUT**, HFH, M8X1.25X8.8, 17.9 OD, 10 DIN, PREV TORQUE (CR/SHF OIL DFL)	00-01		9	11517031
444.	1-E14	1.656	**SCREEN**, O/PMP (W/SUC PIPE)	00-01	Y (LS1)	1	12558750
	1-E14	1.656	**SCREEN**, O/PMP (W/SUC PIPE)	01	Y (LS6)	1	12558750
445.		8.917	**NUT**, PREVAILING TORQUE TENSION FLG HD (M8X1.25X17.4 OD (NUT, O/PMP SUC PIPE)	00-01		1	11516076
446.		8.900	**BOLT/SCREW**, HFH M6X1X20, 9.8, 7114M, DOG PT, 14.2 OD (O/PMP SUC PIPE)	00-01		1	11516398
447.	1-E14	1.724	**SEAL**, O/PMP (O RING)	00-01	Y (LS1)	1	12557752
	1-E14	1.724	**SEAL**, O/PMP (O RING)	01	Y (LS6)	1	12557752
449.	1-E14	1.531	**PLUG**, ENG BLK OIL GAL (INCLS 450)	00-01	Y (LS1)	1	12558340
	1-E14	1.531	**PLUG**, ENG BLK OIL GAL (INCLS 450)	01	Y (LS6)	1	12558340
450.		N.S.	**SEAL**, ENG BLK OIL GAL PLUG (O RING) (PART OF 449)				
451.		8.970	**PLUG**, CUP 6/8 HOLE CORROSION RESISTANT STL PL (ENG BLK OIL GAL)	00-01		1	9427893
452.	1-E14	1.531	**PLUG**, ENG BLK OIL GAL (M16X1.5X6G) (STEEL, ZIVC 4345M, USE T/W SEALER 12346004 (OR EQUIV)) (0.034)	00-01	Y (LS1)	2	21007339
	1-E14	1.531	**PLUG**, ENG BLK OIL GAL (M16X1.5X6G) (STEEL, ZIVC 4345M, USE T/W SEALER 12346004 (OR EQUIV)) (0.034)	01	Y (LS6)	2	21007339
453.	1-E16	1.855	**FITTING**, OIL FLTR	00-01	Y (LS1)	1	12552357
	1-E16	1.855	**FITTING**, OIL FLTR	01	Y (LS6)	1	12552357
454.		N.S.	**RIVET**, OIL PAN GSKT (PART OF 414) (POP-OFF TYPE)				
455.	1-E13	1.429	**GASKET**, OIL PAN (LOWER INTERNAL SUMP PAN RAIL)	00-01	Y (LS1)	1	12562020
	1-E13	1.429	**GASKET**, OIL PAN (LOWER INTERNAL SUMP PAN RAIL)	01	Y (LS6)	1	12562020

cardiagn.com

								1Y00-058
456.		N.S.	PAN, OIL (LOWER SUMP PAN FLAT) (PART OF 414)		.....			
457.		8.900	BOLT, HFH, M6X1X30, 20.5 THD, 14.2 OD, 9.8, SN-ZN, MACH, P-PT (BOLT, OIL PAN-- (LOWER SUMP PAN BOLT) (PART OF 414)	00-01	.....	AR	11517509
458.	1-N26	4.105	COVER, TRANS (AC-DELCO #12559501)	00-01	Y (LS1)	LH	12559501
459.		8.977	SCREW, M6X1X20 (RH & LH-SIDE)	00-01	.....	2	10077361
460.	1-N26 1-N26	4.105	COVER, TRANS (AC-DELCO #12562042)	00-01	Y (LS1)	RH	12562042

RPO DEFINITIONS
LS1 – ENGINE GAS, 8 CYL, 5.7L, SFI, ALUMINUM ENGINE
LS6 – ENGINE GAS, 8 CYL, 5.7L, SFI, ALUMINUM ENGINE, HIGH OUTPUT

cardiagn.com

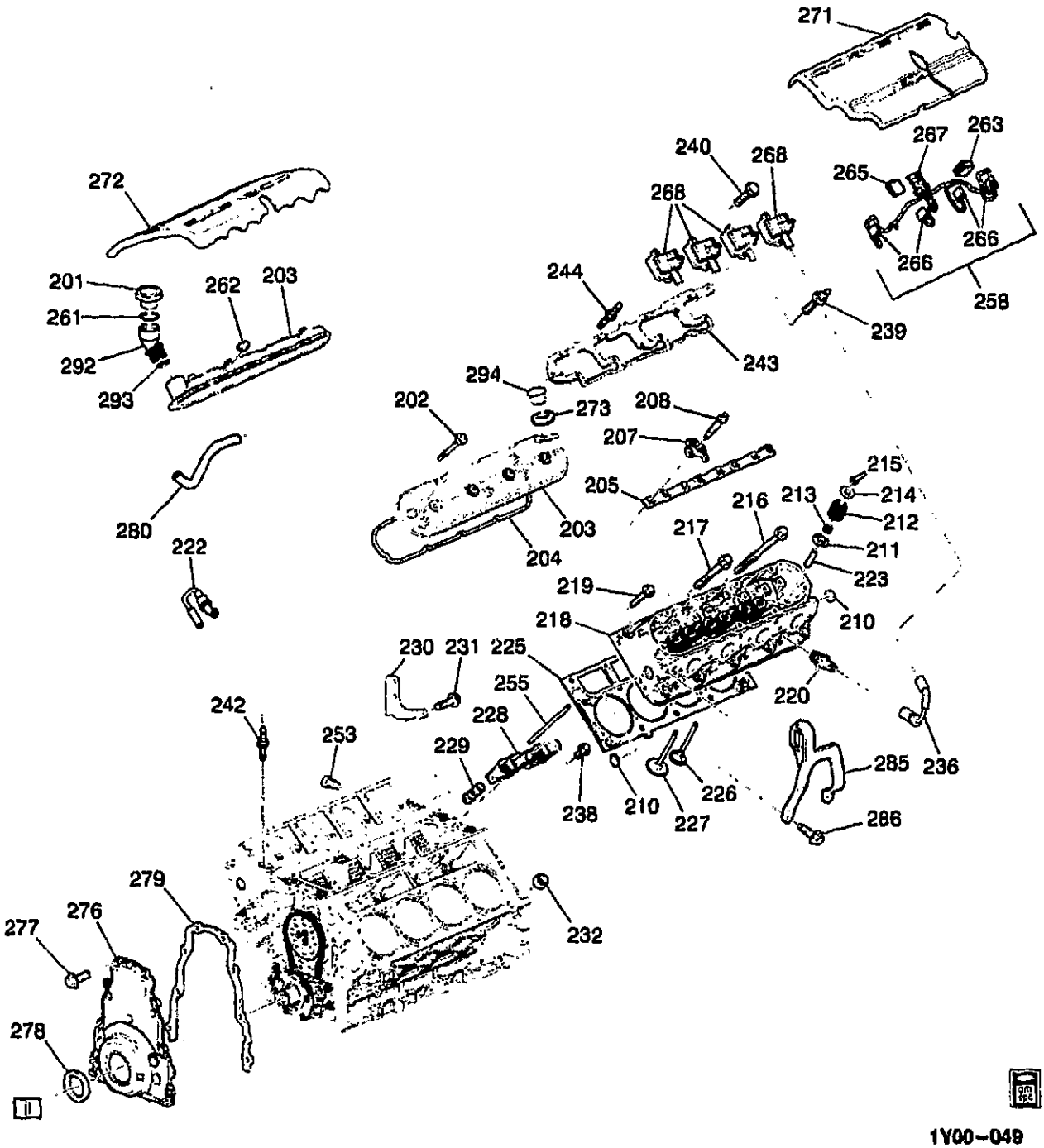

1Y00-049

2001 Y ENGINE ASM-5.7L V8 PART 2 CYLINDER HEAD AND RELATED PARTS (LS6/5.7S)

201.	1-E15	1.758	CAP, OIL FIL (INCL 261) ("MOBIL 1") (WITH SEAL) (AC-DELCO #RC73)	01 Y (LS6)	1	12555685
202.	1-D15	0.413	BOLT, VLV RKR ARM CVR (W/GROMMET)	01 Y (LS6)	8	12559893

cardiagn.com

203.	1-D15	0.386	COVER, VLV RKR ARM (INCLS 202, 204, 262)	01	Y (LS6)	LH	12561820
	1-D15	0.386	COVER, VLV RKR ARM (INCLS 202, 204, 273) (THREE RAISED BOSS AREA)	01	Y (LS6)	RH	12561818
204.	1-D15	0.423	GASKET, VLV RKR ARM CVR (*KIT1)	01	Y (LS6)	2	12560698
205.	1-D16	0.429	SUPPORT, VLV RKR ARM PIV	01	Y (LS6)	2	12552203
207.	1-D15	0.333	ARM, VLV RKR	01	Y (LS6)	16	10214664
208.	1-D15	0.349	BOLT, VLV RKR ARM PIV SUPT	01	Y (LS6)	16	12560981
210.	1-D14	0.293	PLUG, CYL HD CORE HOLE (CUP, 32.03X7.87X1.47, 1010, 6199-M)	01	Y (LS6)	4	1647542
211.	1-D14	0.303	SHIM, VLV SPR	01	Y (LS6)	16	12565118
212.	1-D14	0.303	SPRING, VLV	01	Y (LS6)	16	12565117
213.	1-D14	0.308	SEAL KIT, EXH VLV STEM OIL (14.4MM) (INCLS (8) SEALS)	01	Y (LS6, M12)	4	12457652
	1-D14	0.308	SEAL KIT, INT VLV STEM OIL (INCLS (8) SEALS)	01	Y (LS6)	1	12533586
214.	1-D15	0.309	CAP, VLV SPR	01	Y (LS6)	16	10166344
215.	1-D15	0.310	KEY, VLV STEM	01	Y (LS6)	32	10166345
216.	1-D14	0.293	BOLT, CYL HD (M11X2.0X155.0-6G THD) (W/ADHES PATCH)	01	Y (LS6)	16	12560744
217.	1-D14	0.293	BOLT, CYL HD (M11X2.0X100.0-6G THD) (W/ADHES PATCH)	01	Y (LS6)	4	12560745
218.	1-D13	0.269	HEAD, CYL (INCLS HEAD, GUIDES, SEAT, PLUG)	01	Y (LS6)	2	12560801
219.	1-D14	0.293	BOLT, CYL HD (SHORT) (6X1.25X45)	01	Y (LS6)	10	12558840
220.	1-M21	2.270	SPARK PLUG, (AC-DELCO #41-974)	01	Y (LS6)	8	12563707
222.	1-E15	1.762	PIPE, PCV VLV (SEE ENGINE ART PART 5 CALLOUT 565) (ENGINE RPO LS6)	01	Y (LS6)	1	12568010
223.		N.S.	GUIDE, VLV (PART OF 218)				
225.	1-D13	0.289	GASKET, CYL HD (*KIT1)	01	Y (LS6)	RH	12558809
	1-D13	0.289	GASKET, CYL HD (*KIT1)	01	Y (LS6)	LH	12558810
226.	1-D14	0.297	VALVE, EXH (STD)	01	Y (LS6)	8	12555907
	1-D14	0.297	VALVE, EXH (0.015" O.S.)	01	Y (LS6)	8	12562954
227.	1-D14	0.296	VALVE, INT (0.015" O.S.)	01	Y (LS6)	8	12562952
	1-D14	0.296	VALVE, INT (STD)	01	Y (LS6)	8	12563063
228.	1-D16	0.439	GUIDE, VLV LFTR (ACCOMODATES 4 VLV LFTRS EACH)	01	Y (LS6)	4	12551162
229.	1-D16	0.459	LIFTER, VLV (AC-DELCO #HL124)	01	Y (LS6)	16	17122490
230.		N.S.	BRACKET, ENG LIFT RR			1	
231.		3.900	BOLT, HFH, M10X1.5X35, 32THD, 22.3 OD, 10.9, 7114M, MACH (ENG LIFT BRKT RR)	01		2	11515767
232.	1-D14	0.293	PIN, CYL HD LOC (1/2 X 5/8 O.D.)	01	Y (LS6)	4	12558081
238.	1-M21	2.240	WIRE, SPLG (POS #1-#8) (STYLE 6DDD) (7.8" LONG) (2.239) (AC-DELCO #348S)	01	Y (LS6)	8	12192084

cardiagn.com

							1Y00-049
238.	1-D16	0.459	**BOLT**, VLV LFTR GDE (HFH M6X1.0X19, 13 THD, 10.9, GM4435M, MACH, DOG PT & SHOULDER)	01	Y (LS6)	4	12551163
239.	1-M21	2.183	**STUD**, IGN COIL (HFH 6X1X18.5X14 W/ADH, 6X1X14, 39.1 OAL, 14.2 OD, 9.8, 7114M) (3.330) (AC-DELCO #12554211)	01	Y (LS6)	10	12554211
240.	1-M21	2.183	**BOLT**, IGN COIL (14.865)	01	Y (LS6)	4	10258914
242.	1-E8	1.097	**STUD**, ENG COOL AIR BL PIPE	01	Y (LS6)	2	12561089
243.	1-M21	2.183	**BRACKET**, IGN COIL (AC-DELCO #12563288)	01	Y (LS6)	1	12563288
244.	1-M21	2.183	**STUD**, IGN COIL BRKT (HFH 6X1X18.5X14 W/ADH, 6X1X14, 39.1 OAL, 14.2 OD, 9.6, 7114M) (3.330) (AC-DELCO #12554211)	01	Y (LS6)	10	12554211
253.	1-D14	0.293	**PLUG**, CYL HD CORE HOLE (THREADED)	01	Y (LS6)	1	12553191
255.	1-D15	0.426	**ROD**, VLV PUSH	01	Y (LS6)	16	10238852
258.	1-M21	2.240	**WIRE**, IGN COIL (INCLS 263, 265, 266, 267, 269) (W/CLIP)	01	Y (LS6)	1	12569111
261.		N.S.	**SEAL**, O-RING FIL (PART OF ITEM #201				
262.		N.S.	**ELBOW**, PCV (PART OF ITEM #203)				
263.		N.S.	**CLIP**, IGN COIL WIRE (PART OF 258)				
265.		N.S.	**CLIP**, WRG HARN (PART OF 267)				
266.	1-M21	2.170	**CONNECTOR**, COIL-IGN (4-WAY F) (W/LEADS, IN A ROW) (4.651) (AC-DELCO #PT368)	01	Y (LS6)	8	12102741
267.	1-N15	2.530	**CONNECTOR**, INLINE-TO ENG HARN (7-WAY M, W/LEADS) (AC-DELCO #PT281)	01	Y (LS6)	1	12102490
268.	1-M21	2.170	**COIL**, IGN (AC-DELCO #D580)	01	Y (LS6)	8	12558948
271.	1-N22	3.330	**COVER**, F/INJN FUEL RL	01	Y (LS6)	LH	12564257
272.	1-N22	3.330	**COVER**, F/INJN FUEL RL	01	Y (LS6)	RH	12564258
273.	1-E14	1.745	**GROMMET**, PCV VLV (PART OF 203)	01	Y (LS6)	1	10198949
276.	1-D13	0.206	**COVER**, ENG FRT (INCLS CVR, SEAL, GSKT, BOLT)	01	Y (LS6)	1	12561243
277.		0.137	**BOLT**, CR/SHF RR OIL SEAL HSG	01			
278.	1-D13	0.213	**SEAL**, CR/SHF FRT OIL	01	Y (LS6)	1	12561244
279.	1-D13	0.207	**GASKET**, ENG FRT CVR	01	Y (LS6)	1	12558013
280.	1-E15	1.762	**TUBE**, PCV (FROM RIGHT SIDE ROCKER ARM COVER (VALVE COVER) CONNECTOR TO THROTTLE BODY)	01	Y (LS6)	1	12556454
285.		N.S.	**BRACKET**, ENG LIFT FRT				
286.		8.900	**BOLT**, HFH, M10X1.5X35, 32THD, 22.3 OD, 10.9, 7114M, MACH (ENG LIFT BRKT)	01		2	11515767
292.	1-E14	1.745	**TUBE**, OIL FIL (INCLS 293)	01	Y (LS6)	1	12559505

cardiagn.com

293.		N.S.	**SEAL**, O-RING FIL (PART OF ITEM #292		.....		
294.	1-D15	0.386	**PLUG**, VLV RKR ARM CVR PCV VLV HOLE	01	Y (LS6)	1	12568011

SERVICE KITS

1.		0.289	**GASKET KIT**, CYL HD (INCL 204, 225) (KIT INCLUDES: GASKETS FOR CYLINDER HEAD, INTAKE AND EXHAUST MANIFOLD, VALVE COVERS AND SEAL, ENG COOL AIR BL PIPE (O-RING) ...	01	.....

RPO DEFINITIONS

LS6 – ENGINE GAS, 8 CYL, 5.7L, SFI, ALUMINUM ENGINE, HIGH OUTPUT
M12 – TRANSMISSION MAN 6 SPD, TREMEC, 85MM, 1ST 2.97, 6TH 0.57, O/D

cardiagn.com

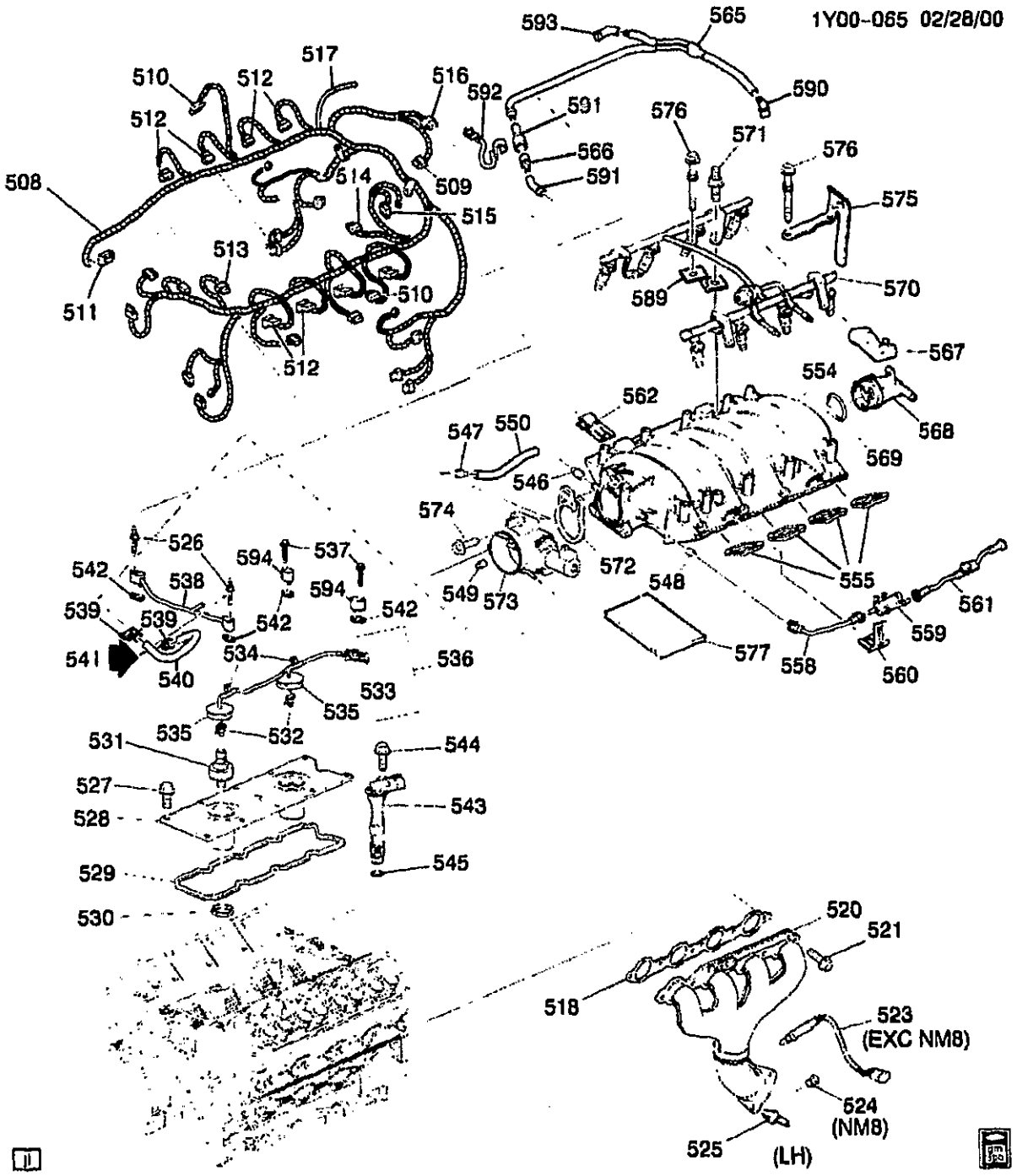

2001 Y ENGINE ASM–5.7L V8 PART 5 MANIFOLDS AND FUEL RELATED PARTS (LS1/5.7G)

508.	1–N15	2.525	HARNESS, ENG WRG	01 Y (M30)	1	15329389
	1–N15	2.525	HARNESS, ENG WRG	01 Y (MM6)	1	15329391
509.	1–M22	2.383	CONNECTOR, SEN–CM/SHF POSN (PART OF 508) (BLACK) (3–WAY F) (W/LEADS) (2.535) (AC–DELCO #PT117)	01 Y (LS1)	1	12085495

cardiagn.com

						1Y00-065
510.			**CONNECTOR**, MDL-ELEK IGN CONT (8.965) (AC-DELCO #PT381)	01		1 12102754
511.	1-N23	3.339	**CONNECTOR**, SEN-THROT POSN (6-WAY F) (W/LEADS) (WIRE CAVITIES CAN BE PLUGGED W/12085266) (2.383) (AC-DELCO #PT787)	01	Y	1 12167121
512.	1-N13	2.483	**CONNECTOR**, INJR-FUEL (2-WAY F) (W/LEADS) (2.535) (AC-DELCO #PT113)	01	Y (LS1, MM6, M30)	8 12085491
513.	1-N27	10.485	**CONNECTOR**, MOT-DR LK ACTR (BLACK) (2-WAY M) (W/LEADS) (13.090) (AC-DELCO #PT288)	01	Y (MM6, M30)	1 12116247
514.	1-N15	2.530	**CONNECTOR**, INLINE-TO KNOCK SEN (PART OF 508) (BLACK) (3-WAY F) (W/LEADS) (2.535) (AC-DELCO #PT117)	01	Y	1 12085495
515.	1-E13	1.516	**CONNECTOR**, SEN-ENG OIL LVL (BLACK) (2-WAY F W/LEADS) (3.670) (AC-DELCO #PT374)	01	Y	2 12102747
516.	1-N24	3.682	**CONNECTOR**, SEN-MAP (GRAY) (3-WAY F)	01	Y (LS1)	1 12129946
517.	1-N27	9.281	**HOSE**, HTR & A/C CONT VAC TK (HOSE, VAC .HVAC PORT) (ENG HARN SECTION)	01	Y (LS1)	1 12124136
518.	1-N21	3.270	**GASKET**, EXH MANIF (*KIT1)	01	Y (LS1)	1 12561912
520.	1-N23	3.601	**MANIFOLD**, EXH (INCLS 524, 525)	01		
521.	1-N21	3.275	**BOLT**, EXH MANIF	01	Y (LS1)	12 12560206
523.	1-N24	3.682	**SENSOR**, HTD OXY (AC-DELCO #AFS75)	01	Y (LS1)	1 25312184
	1-N24	3.682	**SENSOR**, HTD OXY (AC-DELCO #AFS75)	01	Y (LS1)	1 25312184
524.		8.971	**PLUG-EXT**, M18X1.5X10 TAPPERED 1:16, 19 OD, 22 OAL, SAE 1010/1012 (OXY SEN HOLE)	01	Y (LS1)	1 25509274
525.	1-N23	3.613	**STUD**, EXH PIPE (M10X1.5X36.5, 22 THD, M10X1.5X16, 14 THD, 20.8 OD, 5.8, 6164M,)	01	Y (LS1)	6 12562640
526.	1-E6	1.097	**STUD**, ENG COOL AIR BL PIPE	01	Y (LS1)	2 12561089
527.		8.900	**BOLT**, HWH, M8X1.25X32, 22.9 THD, 9.8, PS (BOLT, ENG BLK VALLEY CVR- (PART OF 528)	01	Y (LS1)	10 12551187
528.	1-N21	3.265	**COVER**, ENG BLK VALLEY (INCLS 527, 529, 530)	01	Y (LS1)	1 12561106
529.	1-N21	3.270	**GASKET**, ENG BLK VALLEY CVR (PART OF 528)	01	Y (LS1)	1 12558178
530.	1-M22	2.383	**GROMMET**, KNOCK SEN (PART OF 528)	01	Y (LS1)	2 12558177
531.	1-M22	2.383	**SENSOR**, KNOCK (W/O LOCATING TAB) (AC-DELCO #213-362)	01	Y (LS1)	2 10456603

cardiagn.com

532.	1-M22	2.383	**CONNECTOR**, SEN-KNOCK (PART OF 536) (1-WAY M, W/LEADS, HIGH TEMP) (1.150) (AC-DELCO #PT727)	01	Y (LS1)	2	12126456
533.	1-N15	2.530	**CONNECTOR**, INLINE-TO ENG HARN (PART OF 536) (BLACK) (2-WAY M) (W/LEADS) (4.720) (AC-DELCO #PT786)	01	Y (LS1)	1	12167120
534.		N.S.	**CLIP**, HARNESS KNOCK SENSOR JUMPER (PART OF 536	01	Y (LS1)	2	
535.		N.S.	**GROMMET**, KNOCK SENSOR (PART OF 536	01	Y (LS1)	2	12554408
536.	1-M23	2.480	**WIRE**, KNOCK SEN (INCLS 532, 533, 534, 535)	01	Y (LS1)	1	15372170
537.		8.900	**BOLT**, METRIC HEX FLG HD (M6X1X30) (POR 9.8) (ENG COOL AIR BL PIPE)	01	.....	4	11514008
538.	1-E8	1.097	**PIPE**, ENG COOL AIR BL (INCLS 539, 541, 542)	01	Y (LS1)	1	12568478
539.		8.948	**CLAMP**, SPRG BAND, 14.2MM, 9/16 OD HOSE, POR (ENG COOL AIR BL (PART OF 538)	01	(LS1)	2	25526358
540.	1-E8	1.097	**HOSE**, ENG COOL AIR BL (PART OF 538)	01	.....		
541.		8.800	**LUBRICANT**, RUBBER 5 GAL (LUBRICANT, ENG COOL AIR BL HOSE)	01	.....	AR	12345884
542.	1-E8	1.097	**SEAL**, ENG COOL AIR BL PIPE (O RING) (PART OF 538)	01	Y (LS1)	2	12551933
		8.800	**LUBRICANT**, RUBBER 5 GAL (NOTE:APPLY TO SEAL (542)	01	Y (LS1)	AR	12345884
543.	1-M22	2.383	**SENSOR**, CM/SHF POSN (INCL 545) (AC-DELCO #213-363) ...	01	Y (LS1)	1	12561211
	1-M22	2.383	**CONNECTOR**, SEN-CM/SHF POSN (BLACK) (3-WAY F) (W/LEADS) (2.535) (AC-DELCO #PT117)	01	Y (LS1)	1	12085485
544.		8.900	**BOLT**, HFH, M8X1.25X20, 17THD, 18OD (BOLT, CR/SHF POSN SEN)	01	.....	1	11515756
545.		N.S.	**SEAL**, CM/SHF POSN SEN HOLE PLUG (O RING) (PART OF 543) ..		.....	1	
546.		N.S.	**CONNECTOR**, PCV CR/CASE VENT (PART OF 554		Y	1	
547.		N.S.	**CONNECTOR**, PCV FRESH AIR TO CR/CASE (PART OF 573		Y	1	
548.		N.S.	**CONNECTOR**, PURGE PORT (PART OF 554		Y	1	
549.		N.S.	**CONNECTOR**, VAPOR VENT TUBE (PART OF 573		Y	1	
550.	1-E15	1.762	**TUBE**, PCV (FROM RIGHT SIDE ROCKER ARM COVER (VALVE COVER) CONNECTOR TO THROTTLE BODY)	01	Y (LS1)	1	12556454

cardiagn.com

							1Y00-065
554.	1-N21	3.265	**MANIFOLD**, INT (INCLS MANIF, GASKETS, SEALS, PLUGS, SENSOR) (SEE GROUP 3.000 "FUEL RAIL, INTAKE MANIFOLD, THROTTLE BODY "FOR DETAIL ILLUSTRATED VIEW.) (INCLS 546, 548, 568)	01	Y (LS1)	1	88890524
555.	1-N21	3.270	**GASKET KIT**, INT MANIF (CONTAINS 8 GASKETS)	01	Y (LS1)	1	12533587
558.	1-N21	3.145	**TUBE**, EVAP EMIS CNSTR PURGE (FROM THROTTLE BODY TO*VALVE, EVAP ITEM (599)) ...	01	Y (LS1)	1	12552222
559.	1-N20	3.130	**VALVE**, EVAP EMIS CNSTR PURGE SOL (AC-DELCO #214-641)	01	Y (LS1)	1	1997278
560.	1-N20	3.130	**BRACKET**, EVAP EMIS CNSTR PURGE SOL VLV	01	Y (LS1)	1	12560884
561.	1-N21	3.145	**TUBE**, EVAP EMIS CNSTR PURGE (INCLUDES SERVICE PORT)	01	Y (LS1, LS6)	1	12562563
562.	1-E15	1.762	**RETAINER**, PCV VLV PIPE	01	Y (LS1)	2	12557340
565.	1-E15	1.762	**PIPE**, PCV VLV (INCLS 566, 590, 591, 592)	01	Y (LS1)	1	12562580
566.	1-E14	1.745	**VALVE**, PCV (PART OF 565) (AC-DELCO #CV948C)	01	Y (LS1)	1	25179136
567.	1-N24	3.682	**SENSOR**, MAP (W/SEAL) (AC-DELCO #213-331)	01	Y (LS1)	1	16212460
	1-N24	3.682	**CONNECTOR**, SEN-MAP (GRAY) (3-WAY F)	01	Y (LS1)	1	12129946
568.		N.S.	**PLUG**, MAP SEN HOLE (PART OF 554) (INCLS 569)		.....		
569.		N.S.	**SEAL**, MAP SEN HOLE PLUG (O RING) (PART OF 568)		.....		
570.	1-N22	3.330	**RAIL**, SEQ M/PORT F/INJN FUEL (SEE GROUP 3.000 "RAIL" FOR DETAIL ILLUSTRATED VIEW.) (AC-DELCO #217-1401)	01	Y (LS1)	1	12562615
571.	1-N22	3.330	**STUD**, F/INJN FUEL RL (HFH 6X1X18.5X14 W/ADH, 6X1X14, 39.1 OAL, 14.2 OD, 9.8, 7114M) (AC-DELCO #12554211)	01	Y (LS1)	4	12554211
572.	1-N22	3.336	**SEAL**, THROT BODY	01	Y (LS1)	1	12552542
573.	1-N22	3.335	**BODY**, THROT (INCLS:THROTTLE BODY SENSOR POSITION) (SEE GROUP 3.000 "BODY, THROT"FOR DETAIL ILLUSTRATED VIEW. (INCLS 547, 549)	01	Y (LS1)	1	17113669
574.		6.900	**BOLT**, METRIC HEX FLG HD (M6X1X30) (POR 9.8) (THROT BODY)	01	.....	3	11514008
575.	1-N22	3.330	**BRACKET**, F/INJN FUEL RL (ON INTAKE MANIFOLD BEHIND FUEL RAIL-STOP)	01	Y (LS1)	LH	12556074

cardiagn.com

							1Y00-065
576.	1-N21	3.275	**BOLT**, INT MANIF (W/FLAT WASHER) (M6X1.0X21.8, 13.6 OD, GM500M, ZF, MACH, ADHES)	01	Y (LS1)	10	12552344
577.	1-N21	3.270	**SEAL**, INT MANIF	01	Y (LS1)	2	12560251
589.	1-N22	3.330	**BRACKET**, F/INJN FUEL RL (90 DEG "S" TYPE BRKT) (GROUND STRAP))	01	Y (LS1)	RH	12560384
590.		N.S.	**ELBOW**, PCV VLV		.....		
591.		N.S.	**PIPE**, PCV VLV (PART OF 565) ...		.....		
592.		N.S.	**STRAP**, PCV HARN (PART OF 565)		.....		
593.		N.S.	**ELBOW**, PCV VLV (PART OF 565)		.....		
594.	1-E8	1.097	**COVER**, ENG COOL AIR BL PIPE HOLE	01	Y (LS1)	2	12562788

SERVICE KITS

1.		0.289	**GASKET KIT**, CYL HD (INCLS KIT CONTAINS: GASKETS FOR CYLINDER HEAD, INTAKE AND EXHAUST MANIFOLDS, SEAL-ENG COOL AIR BL PIPE (O-RING)	01	.....

RPO DEFINITIONS

LS1 – ENGINE GAS, 8 CYL, 5.7L, SFI, ALUMINUM ENGINE
LS6 – ENGINE GAS, 8 CYL, 5.7L, SFI, ALUMINUM ENGINE, HIGH OUTPUT
MM6 – TRANSMISSION MAN 6 SPD, BORG WARNER, 85MM, 1ST 2.66, 6TH 0.50, O/D
M30 – TRANSMISSION,AUTOMATIC 4 SPEED,4L60E,ELECTRONIC

cardiagn.com

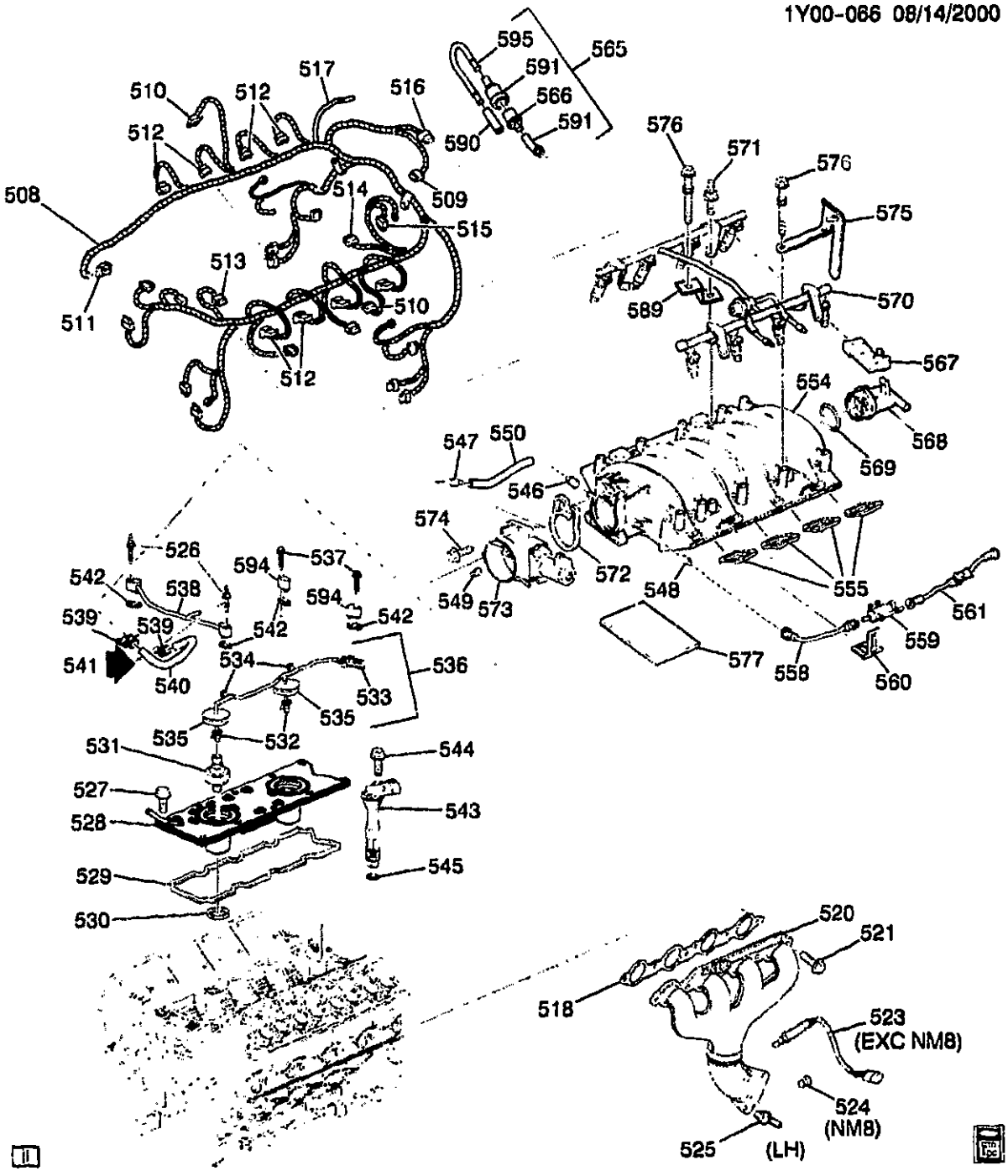

1Y00-066

2001 Y ENGINE ASM-5.7L V8 PART 5 MANIFOLDS AND FUEL RELATED PARTS (LS6/5.7S)

508.	1-N15	2.525	HARNESS, ENG WRG	01	Y (M30)	1	15329389
	1-N15	2.525	HARNESS, ENG WRG	01	Y (MM6)	1	15329391
	1-N15	2.525	HARNESS, ENG WRG	01	Y37 (LS6, M12)	1	15329391

cardiagn.com

509.	1-M22	2.383	**CONNECTOR**, SEN-CM/SHF POSN (PART OF 508) (BLACK) (3-WAY F) (W/LEADS) (2.535) (AC-DELCO #PT117)	01	Y (LS6)	1	12085495
510.			**CONNECTOR**, MDL-ELEK IGN CONT (8.965) (AC-DELCO #PT381)	01	.....	2	12102754
511.	1-N23	3.339	**CONNECTOR**, SEN-THROT POSN (6-WAY F) (W/LEADS) (WIRE CAVITIES CAN BE PLUGGED W/12065266) (2.383) (AC-DELCO #PT787)	01	Y	1	12167121
512.	1-N13	2.483	**CONNECTOR**, INJR-FUEL (2-WAY F) (W/LEADS) (2.535) (AC-DELCO #PT113)	01	Y (LS6)	8	12085491
513.	1-N23	3.670	**CONNECTOR**, MDL-THROT ACTR CONT (TO ENG HARNESS) (16-WAY F, W/O LEADS, M/P 100W)	01	Y	1	12191065
	1-N23	3.670	**CONNECTOR**, MDL-THROT ACTR CONT (TO I/P HARNESS) (BLACK) (10-WAY F) (W/LEADS) (2.530) (AC-DELCO #PT588) ...	01	Y	2	12125676
514.	1-N15	2.530	**CONNECTOR**, INLINE-TO KNOCK SEN (PART OF 508) (BLACK) (3-WAY F) (W/LEADS) (2.535) (AC-DELCO #PT117) ...	01	Y	1	12085495
515.	1-E13	1.516	**CONNECTOR**, SEN-ENG OIL LVL (BLACK) (2-WAY F W/LEADS) (3.670) (AC-DELCO #PT374)	01	Y	2	12102747
516.	1-N24	3.682	**CONNECTOR**, SEN-MAP (GRAY) (3-WAY F)	01	Y (LS6)	1	12129946
517.	1-N27	9.281	**HOSE**, HTR & A/C CONT VAC TK (HOSE, VAC .HVAC PORT) (ENG HARN SECTION)	01	Y (LS6)	1	12124136
518.	1-N21	3.270	**GASKET**, EXH MANIF (*KIT1)	01	Y (LS6)	1	12561912
520.	1-N23	3.601	**MANIFOLD**, EXH (INCLS 524, 525)	01	.....		
521.	1-N21	3.275	**BOLT**, EXH MANIF	01	Y (LS6)	12	12560208
523.	1-N24	3.682	**SENSOR**, HTD OXY (AC-DELCO #AFS75)	01	Y (LS6)	1	25312184
524.		6.971	**PLUG-EXT**, M18X1.5X10 TAPPERED 1:16, 19 OD, 22 OAL, SAE 1010/1012 (OXY SEN HOLE)	01	Y (LS6)	1	25509274
525.	1-N23	3.613	**STUD**, EXH PIPE (M10X1.5X36.5, 22 THD, M10X1.5X16, 14 THD, 20.8 OD, 5.8, 6164M,)	01	Y (LS6)	6	12562840
526.	1-E8	1 097	**STUD**, ENG COOL AIR BL PIPE ..	01	Y (LS6)	2	12561089
527.		8.900	**BOLT**, HWH, M8X1.25X32, 22.9 THD, 9.8, PS (BOLT, ENG BLK VALLEY CVR- (PART OF 528) ...	01	Y (LS6)	10	12551187
528.	1-N21	3.285	**COVER**, ENG BLK VALLEY (INCLS 527, 529, 530)	01	Y (LS6)	1	12568002
529.	1-N21	3.270	**GASKET**, ENG BLK VALLEY CVR (PART OF 528)	01	Y (LS6)	1	12558178
530.	1-M22	2.383	**GROMMET**, KNOCK SEN (PART OF 528)	01	Y (LS6)	2	12558177

cardiagn.com

531.	1-M22	2.383	**SENSOR**, KNOCK (W/O LOCATING TAB) (AC-DELCO #213-362)	01	Y (LS6)	2	10456603
532.	1-N15	2.530	**CONNECTOR**, INLINE-TO KNOCK SEN (PART OF 536) (BLACK) (3-WAY F) (W/LEADS) (2.535) (AC-DELCO #PT117)	01	Y	1	12085495
533.	1-N15	2.530	**CONNECTOR**, INLINE-TO ENG HARN (PART OF 536) (BLACK) (2-WAY M) (W/LEADS) (4.720) (AC-DELCO #PT786)	01	Y (LS6)	1	12167120
534.		N.S.	**CLIP**, HARNESS KNOCK SENSOR JUMPER (PART OF 536	01	Y (LS6)	2	
535.		N.S.	**GROMMET**, KNOCK SENSOR (PART OF 536	01	Y (LS6)	2	12554408
536.	1-M23	2.480	**WIRE**, KNOCK SEN (INCLS 532, 533, 534, 535)	01	Y (LS6)	1	15372170
537.		8.900	**BOLT**, METRIC HEX FLG HD (M6X1X30) (POR 9.8) (ENG COOL AIR BL PIPE)	01		4	11514008
538.	1-E8	1.097	**PIPE**, ENG COOL AIR BL (INCLS 539, 541, 542)	01	Y (LS6)	1	12568478
539.		8.948	**CLAMP**, SPRG BAND, 14.2MM, 9/16 OD HOSE, POR (ENG COOL AIR BL (PART OF 538)	01	(LS6)	2	25526358
		8.948	**CLAMP**, SPRG BAND, 14.2MM, 9/16 OD HOSE, POR (CLAMP, ENG COOL AIR BL HOSE) (PART OF 538)	01	Y	AR	25526358
540.	1-E8	1.097	**HOSE**, ENG COOL AIR BL (PART OF 538)	01			
541.		8.800	**LUBRICANT**, RUBBER 5 GAL (LUBRICANT, ENG COOL AIR BL HOSE)	01		AR	12345884
542.	1-E8	1.097	**SEAL**, ENG COOL AIR BL PIPE (O RING) (PART OF 538)	01	Y (LS6)	2	12551933
			LUBRICANT, ENG COOL AIR BL HOSE (LUBRICANT, ENG COOL AIR BL HOSE-NOTE:APPLY TO SEAL (542)	01	Y (LS6)	AR	12345884
543.	1-M22	2.363	**SENSOR**, CM/SHF POSN (INCL 545) (AC-DELCO #213-363)	01	Y (LS6)	1	12561211
	1-M22	2.383	**CONNECTOR**, SEN-CM/SHF POSN (BLACK) (3-WAY F) (W/LEADS) (2.535) (AC-DELCO #PT117)	01	Y (LS6)	1	12085495
544.		8.900	**BOLT**, HFH, M8X1.25X20, 17THD, 18OD (BOLT, CR/SHF POSN SEN)	01		1	11515756
545.		N.S.	**SEAL**, CM/SHF POSN SEN HOLE PLUG (O RING) (PART OF 543)			1	
546.		N.S.	**CONNECTOR**, PCV CR/CASE VENT (PART OF 554		Y	1	
547.		N.S.	**CONNECTOR**, PCV FRESH AIR TO CR/CASE (PART OF 573		Y	1	
548.		N.S.	**CONNECTOR**, PURGE PORT (PART OF 554		Y	1	

cardiagn.com

							1Y00-068
549.		N.S.	**CONNECTOR**, VAPOR VENT TUBE (PART OF 573		Y	1	
550.	1-E15	1.762	**TUBE**, PCV (FROM RIGHT SIDE ROCKER ARM COVER (VALVE COVER) CONNECTOR TO THROTTLE BODY)	01	Y (LS6)	1	12556454
554.	1-N21	3.265	**MANIFOLD**, INT (INCLS, MANIF, GASKETS, SEALS, PLUGS, SENSOR) (SEE GROUP 3.000 "FUEL RAIL, INTAKE MANIFOLD, MAP (SENSOR) "FOR DETAIL ILLUSTRATED VIEW.) (INCLS 546, 548, 555, 567, 568)	01	Y (LS6)	1	88890524
555.	1-N21	3.270	**GASKET KIT**, INT MANIF (ALSO PART OF 554) (CONTAINS 8 GASKETS)	01	Y (LS6)	8	12533597
558.	1-N21	3.145	**TUBE**, EVAP EMIS CNSTR PURGE (FROM THROTTLE BODY TO*VALVE, EVAP ITEM (599)) ...	01	Y (LS6)	1	12552222
559.	1-N20	3.130	**VALVE**, EVAP EMIS CNSTR PURGE SOL (AC-DELCO #214-641)	01	Y (LS6)	1	1997278
560.	1-N20	3.130	**BRACKET**, EVAP EMIS CNSTR PURGE SOL VLV	01	Y (LS6)	1	12560984
561.	1-N21	3.145	**TUBE**, EVAP EMIS CNSTR PURGE (INCLUDES SERVICE PORT)	01	Y (LS6)	1	12562563
565.	1-E15	1.762	**PIPE**, PCV VLV (INCLS 566, 590, 591, 592, 595)	01	Y (LS6)	1	12568010
566.		N.S.	**VALVE**, PCV (PART OF 565)		.....		
567.	1-N24	3.682	**SENSOR**, MAP (ALSO PART OF 554) (W/SEAL) (AC-DELCO #213-331)	01	Y37 (LS6)	1	16212460
	1-N24	3.662	**CONNECTOR**, SEN-MAP (PART OF 554) (GRAY) (3-WAY F)	01	Y (LS6)	1	12129946
568.		N.S.	**PLUG**, MAP SEN HOLE (PART OF 554) (INCLS 569)		.....		
569.		N.S.	**SEAL**, MAP SEN HOLE PLUG (O RING) (PART OF 568)		.....		
570.	1-N22	3.330	**RAIL**, SEQ M/PORT F/INJN FUEL (SEE GROUP 3.000 "RAIL" FOR DETAIL ILLUSTRATED VIEW.) (AC-DELCO #217-1401)	01	Y (LS6)	1	12562815
571.	1-N22	3.330	**STUD**, F/INJN FUEL RL (HFH 6X1X18.5X14 W/ADH, 6X1X14, 39.1 OAL, 14.2 OD, 9.8, 7114M) (AC-DELCO #12554211)	01	Y (LS6)	4	12554211
572.	1-N22	3.336	**SEAL**, THROT BODY	01	Y (LS6)	1	12552542
573.	1-N22	3.335	**BODY**, THROT (INCLS:THROTTLE BODY SENSOR POSITION) (SEE GROUP 3.000 "BODY, THROT"FOR DETAIL ILLUSTRATED VIEW. (INCLS 547, 549)	01	Y (LS6)	1	17113669
574.		8.900	**BOLT**, METRIC HEX FLG HD (M6X1X30) (POR 9.8) (THROT BODY)	01	.....	3	11514008

cardiagn.com

							1Y00-066
575.	1-N22	3.330	**BRACKET**, F/INJN FUEL RL (ON INTAKE MANIFOLD BEHIND FUEL RAIL-STOP)	01	Y (LS6)	LH	12556074
576.	1-N21	3.275	**BOLT**, INT MANIF (W/FLAT WASHER) (M6X1.0X21.8, 13.6 OD, GM500M, ZF, MACH, ADHES)	01	Y (LS6)	10	12552344
577.	1-N21	3.270	**SEAL**, INT MANIF	01	Y (LS6)	2	12560251
589.	1-N22	3.330	**BRACKET**, F/INJN FUEL RL (90 DEG "S" TYPE BRKT) (GROUND STRAP))	01	Y (LS6)	RH	12560384
590.		N.S.	**CONNECTOR**, PCV HOSE (PART OF 565)		.....		
591.		N.S.	**PIPE**, PCV VLV (PART OF 565) ...		.....		
594.	1-E8	1.097	**COVER**, ENG COOL AIR BL PIPE HOLE	01	Y (LS6)	2	12562788
595.		N.S.	**PIPE**, PCV (PART OF 565)		.....		

SERVICE KITS

1.	0.289	**GASKET KIT**, CYL HD (INCLS KIT CONTAINS: GASKETS FOR CYLINDER HEAD, INTAKE AND EXHAUST MANIFOLDS, SEAL-ENG COOL AIR BL PIPE (O-RING)	01	.....

RPO DEFINITIONS

LS6 -- ENGINE GAS, 8 CYL, 5.7L, SFI, ALUMINUM ENGINE, HIGH OUTPUT
MM6 -- TRANSMISSION MAN 6 SPD, BORG WARNER, 85MM, 1ST 2.66, 6TH 0.50, O/D
M12 -- TRANSMISSION MAN 6 SPD, TREMEC, 85MM, 1ST 2.97, 6TH 0.57, O/D
M30 -- TRANSMISSION,AUTOMATIC 4 SPEED,4L60E,ELECTRONIC

cardiagn.com

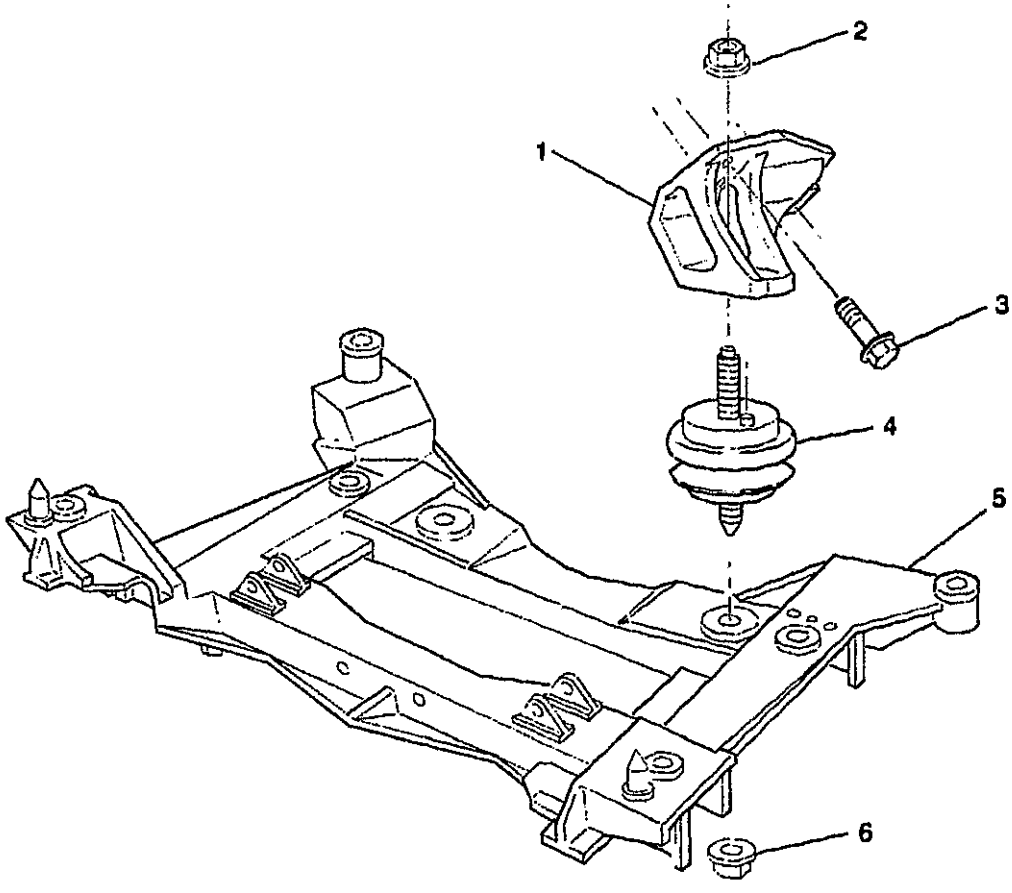

1Y00-004

1997-2001 Y ENGINE MOUNTING

1.	1-D12	0.029	BRACKET, ENG MT	97-01	Y (LS1)	LH	10260842
	1-D12	0.029	BRACKET, ENG MT	97-01	Y (LS1)	RH	10260843
	1-D12	0.029	BRACKET, ENG MT	01	Y (LS6)	LH	10260642
	1-D12	0.029	BRACKET, ENG MT	01	Y (LS6)	RH	10260643
2.		8.917	NUT, HEX FLG PREVAILING TORQ (M12X1.75X14) (ZO 10) (ENG MT ENG SI)	97-01		2	11515744
3.		8.900	BOLT, HFH, M10X1.5X35, 32THD, 22.3 OD, 10.9, 7114M, MACH (ENG MT BRKT)	97-01		6	11515767
4.	1-D12	0.027	MOUNT, ENG	97-01	Y	2	10284134
5.	1-N27	7.010	CROSSMEMBER, FRT	97-00	Y	1	10266922
	1-N27	7.010	CROSSMEMBER, FRT	01	Y	1	10312076
6.		8.917	NUT, HEX FLG PREVAILING TORQ (M12X1.75X14) (ZO 10) (ENG MT FRM SI)	97-01		2	11515744

RPO DEFINITIONS

LS1 – ENGINE GAS, 8 CYL, 5.7L, SFI, ALUMINUM ENGINE

LS6 – ENGINE GAS, 8 CYL, 5.7L, SFI, ALUMINUM ENGINE, HIGH OUTPUT

cardiagn.com

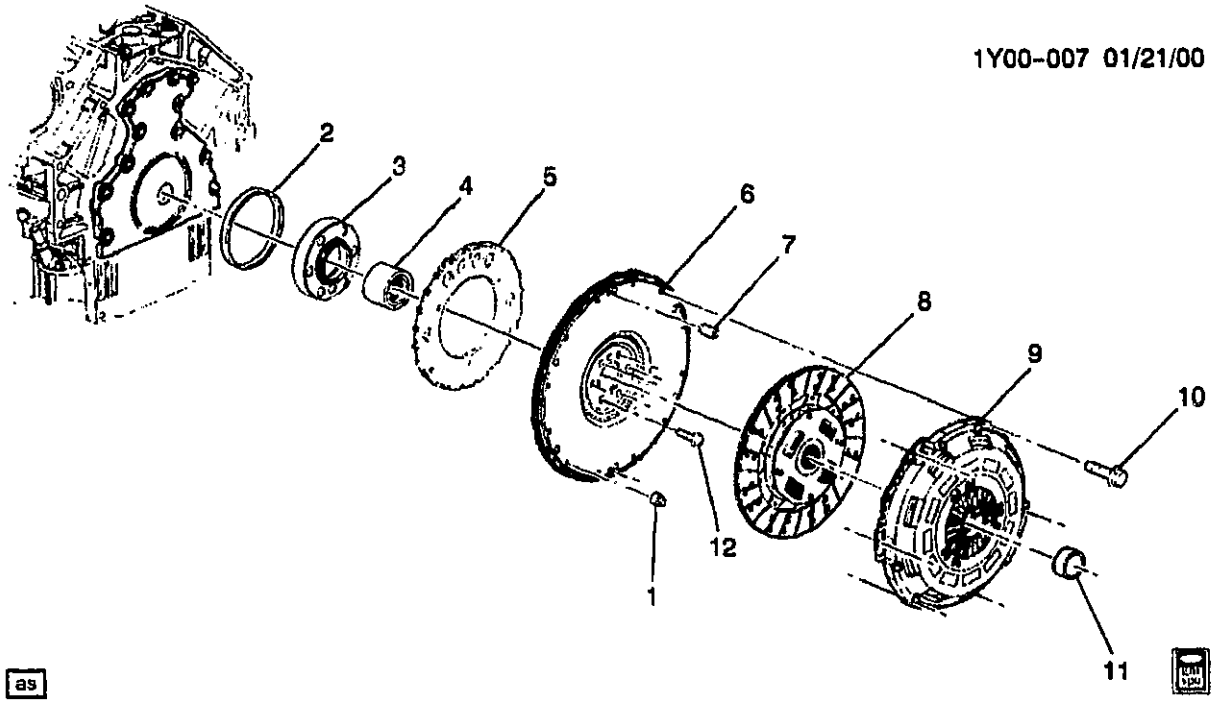

as

1Y00-007

1997-2001 Y CLUTCH

1.		8.940	**PIN**, GROOVE/F/.312X.375 CZ; 0.375" LENGTH (WEIGHT)	97-01	.....	AR	274584
2.	1-D13	0.137	**SEAL**, CR/SHF RR OIL	97-01	Y (LS1)	1	12550574
	1-D13	0.137	**SEAL**, CR/SHF RR OIL	01	Y (LS6)	1	12550574
3.	1-D17	0.646	**CRANKSHAFT**, (INCLS 4, 5)	97-01	Y (LS1)	1	12559354
	1-D17	0.646	**CRANKSHAFT**, (INCLS 4, 5)	01	Y (LS6)	1	12559354
4.		8.970	**PLUG**, EXPANSION PLUG CUP SHAPE 1" STEEL (PART OF 3) ...	97-01	.....	1	9427698
5.		N.S.	**RING**, CR/SHF POSN SEN EXCITOR (SERVICED BY CRANKSHAFT) (PART OF 3)		.....		
6.	1-D18	0.666	**FLYWHEEL**, (W/CLU PRESS PLT) (INCLS 7, 8, 9)	97-00	Y (LS1, MM6)	1	12562765
	1-D20	0.863	**FLYWHEEL**, (W/CLU PRESS PLT) (INCLS 7, 8, 9) (0.666)	97-99	Y (LS1, MM6)	1	12562765
	1-D18	0.666	**FLYWHEEL**, (W/CLU PRESS PLT) (INCLS 7, 8, 9)	01	Y (LS1, MM6)	1	12570281
	1-D18	0.666	**FLYWHEEL**, (W/CLU PRESS PLT) (INCLS 7, 8, 9)	01	Y (LS6, M12)	1	12570281
	1-D20	0.863	**FLYWHEEL**, (W/CLU PRESS PLT) (INCLS 7, 8, 9) (0.666)	01	Y (LS1, MM6)	1	12570281
7.		8.939	**PIN**, DOWEL, M6X20, PL (PART OF 6)	97-01	.....	2	11505820
8.	1-D21	0.886	**PLATE**, CLU DRVN (PART OF 6) .	97	Y (LS1, MM6)	1	12551980
	1-D21	0.886	**PLATE**, CLU DRVN (PART OF 6) .	98-00	Y (LS1, MM6)	1	12562611
	1-D21	0.886	**PLATE**, CLU DRVN (PART OF 6) .	01	Y (LS1, MM6)	1	12570280
	1-D21	0.886	**PLATE**, CLU DRVN (PART OF 6) .	01	Y (LS6, M12)	1	12570280
9.		N.S.	**PLATE**, CLU PRESS ((PART OF 6)		.....		

cardiagn.com

							1Y00-007
10.	1-D20	0.862	**BOLT**, CLU PRESS PLT (HFH M10X1.5X25 10.9 7114M HDR PT, 17.3 FLANGE)	97-01	Y (LS1)	6	12561465
	1-D20	0.862	**BOLT**, CLU PRESS PLT (HFH M10X1.5X25 10.9 7114M HDR PT, 17.3 FLANGE)	01	Y (LS6)	6	12561465
11.	1-D17	0.649	**BEARING**, CLU PILOT	97-01	Y (LS1, MM6)	1	14081685
	1-D17	0.649	**BEARING**, CLU PILOT	01	Y (LS6, M12)	1	14081685
12.	1-D18	0.669	**BOLT**, FLYWHL (HFH, M11X1.5X23.5, 21 THD, 22 O.D., 10.9, GM7114M, MACH, W/SEALANT)	97-01	Y (LS1)	6	12553332
	1-D18	0.669	**BOLT**, FLYWHL (HFH, M11X1.5X23.5, 21 THD, 22 O.D., 10.9, GM7111M, MACH, W/SEALANT)	01	Y (LS6)	6	12553332

RPO DEFINITIONS
LS1 – ENGINE GAS, 8 CYL, 5.7L, SFI, ALUMINUM ENGINE
LS6 – ENGINE GAS, 8 CYL, 5.7L, SFI, ALUMINUM ENGINE, HIGH OUTPUT
MM6 – TRANSMISSION MAN 6 SPD, BORG WARNER, 85MM, 1ST 2.66, 6TH 0.50, O/D
M12 – TRANSMISSION MAN 6 SPD, TREMEC, 85MM, 1ST 2.97, 6TH 0.57, O/D

cardiagn.com

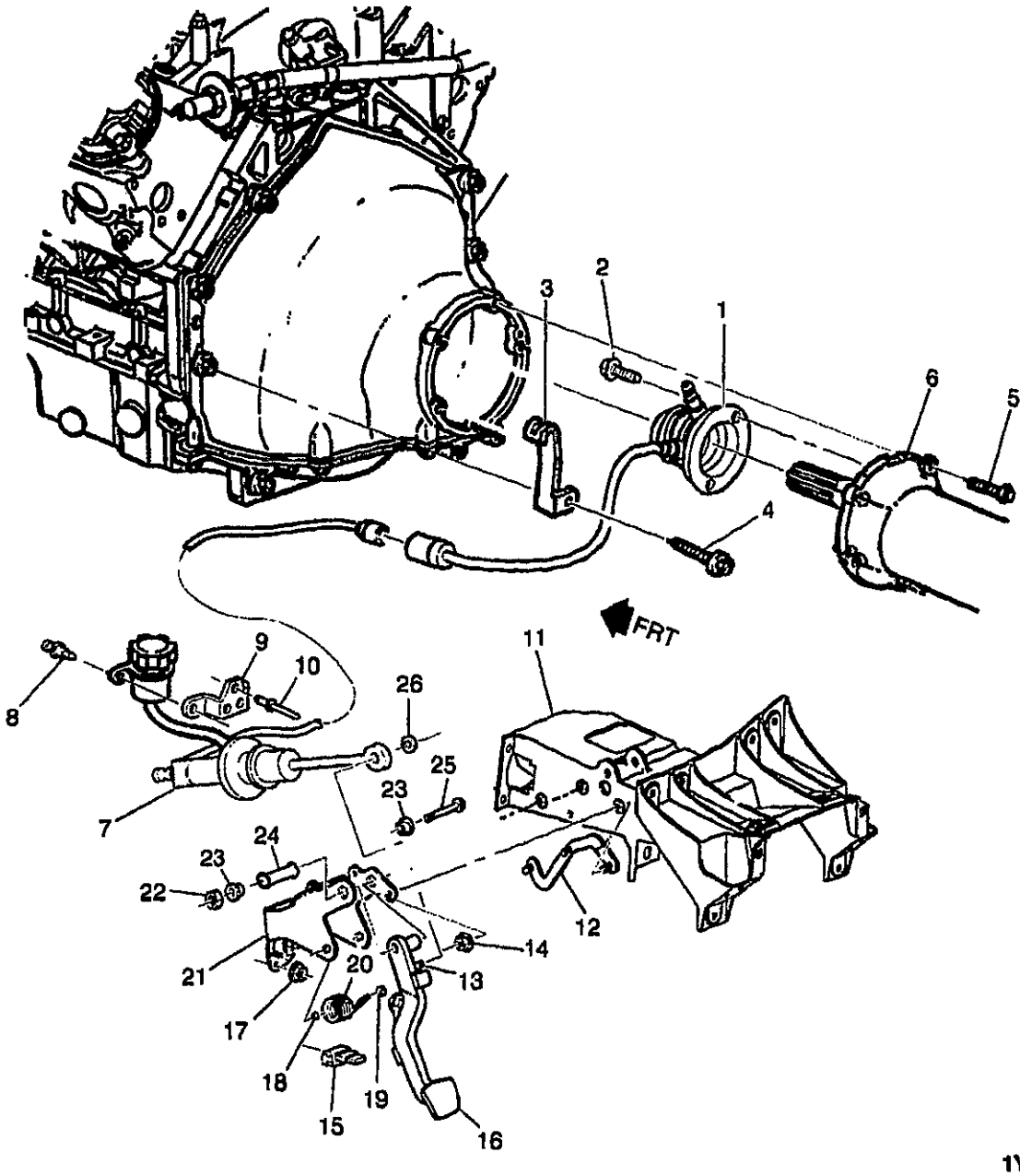

1Y00-013

1997-2001 Y CLUTCH LINKAGE

1.	1-D20	0.780	CYLINDER, CLU ACTR (INCLS REL BRG)	97	Y (MM6)	1	12558236
	1-D20	0.780	CYLINDER, CLU ACTR (INCLS REL BRG)	98-00	Y (MM6)	1	12561709
	1-D20	0.780	CYLINDER, CLU ACTR	01	Y (MM6)	1	12562767
2.		8.900	BOLT, HFH M6X1X25, 9.8 7114M, 14.2OD HDR PT FULL THD (CLU ACTR CYL)	97-01	.....	2	11516424
3.	1-D20	0.785	CLIP, CLU ACTR CYL HOSE (PRESS HOSE TO CLU HSG)	97-01	Y (MM6)	1	12558237

cardiagn.com

4.		8.900	**BOLT**, HFH DOME HD M10X1.5X40 9, 8 7114M 20, 80D HDR PT (FLYWHL HSG)	97-01		7	11516862
5.		8.900	**BOLT**, HFH DOME HD M10X1.5X40 9, 8 7114M 20, 80D HDR PT (TO FRT BELLHOUSING)	97-01		5	11516862
6.	1-N26	5.546	**SUPPORT**, DRIVELINE (COMPLETE ASM) (SEE GROUP 5.000 "PROP SHAFT & SUPPORT DRIVE SHAFT" FOR DETAILED ILLUSTRATED VIEW))	97-99	Y (MM6)	1	12564457
	1-N26	5.546	**SUPPORT**, DRIVELINE (COMPLETE ASM) (SEE GROUP 5.000 "PROP SHAFT & SUPPORT DRIVE SHAFT" FOR DETAILED ILLUSTRATED VIEW))	00	Y (MM6)	1	12564457
	1-N26	5.546	**SUPPORT**, DRIVELINE (COMPLETE ASM) (SEE GROUP 5.000 "PROP SHAFT & SUPPORT DRIVE SHAFT" FOR DETAILED ILLUSTRATED VIEW))	01	Y (MM6, M12)	1	12564457
7.	1-D19	0.775	**CYLINDER**, CLU MAS	97-00	Y (MM6)	1	12564455
	1-D19	0.775	**CYLINDER**, CLU MAS	01	Y (MM6, M12)	1	12564455
8.	1-D20	0.765	**RETAINER**, CLU M/CYL RSVR BRKT (BLACK) (PUSH IN) (1.276)	97-01	Y (MM6)	2	20664092
9.	1-D20	0.765	**BRACKET**, CLU M/CYL RSVR	97-01	Y (MM6)	1	12553075
10.		N.S.	**RIVET**, CLU M/CYL RSVR BRKT				
11.	1-N27	6.760	**BRACKET**, STRG COL	97-01			
12.	1-D20	0.829	**PLATE**, CLU PED LVR BRKT ANC (TO STRG COL SUPT)	97-01	Y (MM6)	1	12555158
13.		N.S.	**PIN**, CLU PED LVR (PART OF 16)				
14.		8.917	**NUT**, HFH, M8X1.25, 17.9 OD, 736 THK, 13MM HEX, 10, ZF (CLU PED) (8.915) (AC-DELCO #11514596)	97-01		3	11514596
15.	1-N25	4.054	**SWITCH**, CLU PED POSN (AC-DELCO #D2214A)	97-00	Y (MM6)	1	14094368
	1-N25	4.054	**SWITCH**, CLU PED POSN (AC-DELCO #D2214A)	01	Y (MM6, M12)	1	14094368
16.	1-D20	0.830	**PEDAL**, CLU (INCLS 13)	97-01	Y (MM6)	1	125[illegible]2447
17.		8.917	**NUT**, HEX W/CON WA 6X1X5.5 16-OD ZP9 (DRVR F/RST BRKT)	97-01		2	11517293
18.	1-D20	0.831	**BUSHING**, CLU PED RTN SPR (OUTBOARD)	97-01	Y (MM6)	2	12558195
19.	1-D20	0.831	**BUSHING**, CLU PED RTN SPR (CENTER)	97-01	Y (MM6)	1	12558196
20.	1-D20	0.844	**SPRING**, CLU PED RTN	97-01	Y (MM6)	1	12555205
21.	1-D20	0.829	**BRACKET**, CLU PED	97-01	Y (MM6)	1	12552446
22.		8.917	**NUT**, HEX PRVG TORQ M10X1.5XGR10XCAD (CLU PED PIV)	97-01		1	11501033
23.	1-D20	0.831	**BUSHING**, CLU PED PIV	97-00	Y (MM6)	2	15594358
	1-D20	0.831	**BUSHING**, CLU PED PIV	01	Y (MM6, M12)	2	15594358
24.	1-D20	0.831	**SPACER**, CLU PED PIV	97-01	Y (MM6)	1	12552449

cardiagn.com

							1Y00-013
25.		8.900	**BOLT**, HFH, M10X1.5X80, 30 THD, 22.3 OD, 9.8, 7114M (CLU PED PIV)	97-01	.....	1	11516357
26.	1-D20	0.852	**RETAINER**, CLU PED LVR PIN (4.662)	97-01	Y (MM6)	1	3817880

RPO DEFINITIONS
MM6 – TRANSMISSION MAN 6 SPD, BORG WARNER, 85MM, 1ST 2.66, 6TH 0.50, O/D
M12 – TRANSMISSION MAN 6 SPD, TREMEC, 85MM, 1ST 2.97, 6TH 0.57, O/D

cardiagn.com

CHEVROLET
CHASSIS GROUP 1.000

ILLUSTRATION INDEX

	TITLE	GRID
1997–2000	Y RADIATOR ASM (MM6)	1–I4
2001	Y RADIATOR ASM (MM6,M12)	1–I4
1997–2001	Y RADIATOR ASM (M30)	1–I6
1997	Y ENGINE COOLANT FAN	1–I8
1998–1999	Y ENGINE COOLANT FAN	1–I11
2000–2001	Y ENGINE COOLANT FAN	1–I14
1997–2001	Y ENGINE BLOCK HEATER (K05)	1–I17
1997–2001	Y HOSES & PIPES/RADIATOR	1–I18
1997–2001	Y TENSIONER/DRIVE BELT	1–I21

cardiagn.com

1Y01-028 08/19/98

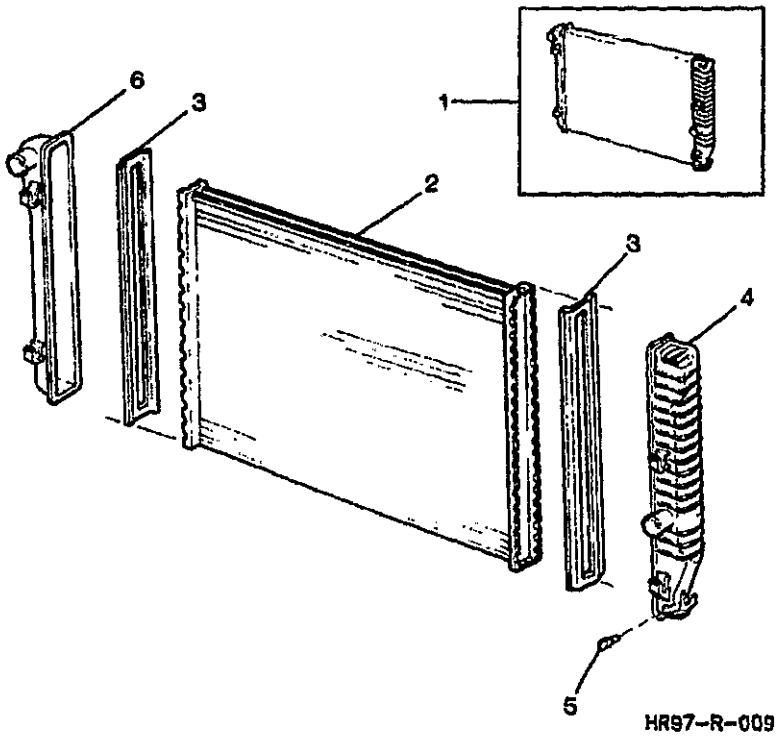

1Y01-028

1997-2000 Y RADIATOR ASM (MM6)
2001 Y RADIATOR ASM (MM6,M12)

1.	1-E10	1.219	**RADIATOR**, (CODE KDM, BBK) (CPS) (AC-DELCO #20889)	97-01	Y (LS1, MM6)	1	52470606
	1-E10	1.219	**RADIATOR**, (CODE KDM, BBK) (CPS) (AC-DELCO #20889)	01	Y37 (LS6, M12)	1	52470606
2.	1-E10	1.219	**CORE**, RAD (INCLS 3) (AC-DELCO #10075)	97-01	Y (LS1, MM6)	1	52477362
	1-E10	1.219	**CORE**, RAD (INCLS 3) (AC-DELCO #10075)	01	Y (LS6, M12)	1	52477362
3.		N.S.	**GASKET**, RAD TK (PART OF 2, 4, 6) (*KIT1)		.....		
4.	1-E10	1.219	**TANK**, RAD OTLT (INCLS 3) (AC-DELCO #52477361)	97-00	Y (LS1, MM6)	1	52477361
	1-E10	1.219	**TANK**, RAD OTLT (INCLS 3) (AC-DELCO #52477361)	01	Y07-67 (LS1, MM6) ...	1	52477361
	1-E10	1.219	**TANK**, RAD OTLT (INCLS 3) (AC-DELCO #52477361)	01	Y37 (LS6, M12)	1	52477361
5.	1-E10	1.219	**PLUG**, RAD DRN	97-01	Y	1	52484010
6.	1-E10	1.219	**TANK**, RAD INL (INCLS 3) (AC-DELCO #52477360)	97-01	Y	1	52477360

cardiagn.com

SERVICE KITS

1.	1-E10	1.219	**GASKET KIT**, RAD TK (INCLS 3) (INCLS TANK HEADER & COOLER TANK GASKETS) (AC-DELCO #52466234)	97	Y (MM6)	1	52466234
	1-E10	1.219	**GASKET KIT**, RAD TK (INCLS 3) (INCLS TANK HEADER & COOLER TANK GASKETS) (AC-DELCO #52466234)	98-01	Y	1	52466234

RPO DEFINITIONS
LS1 – ENGINE GAS, 8 CYL, 5.7L, SFI, ALUMINUM ENGINE
LS6 – ENGINE GAS, 8 CYL, 5.7L, SFI, ALUMINUM ENGINE, HIGH OUTPUT
MM6 – TRANSMISSION MAN 6 SPD, BORG WARNER, 85MM, 1ST 2.66, 6TH 0.50, O/D
M12 – TRANSMISSION MAN 6 SPD, TREMEC, 85MM, 1ST 2.97, 6TH 0.57, O/D

cardiagn.com

1Y01-027 08/19/98

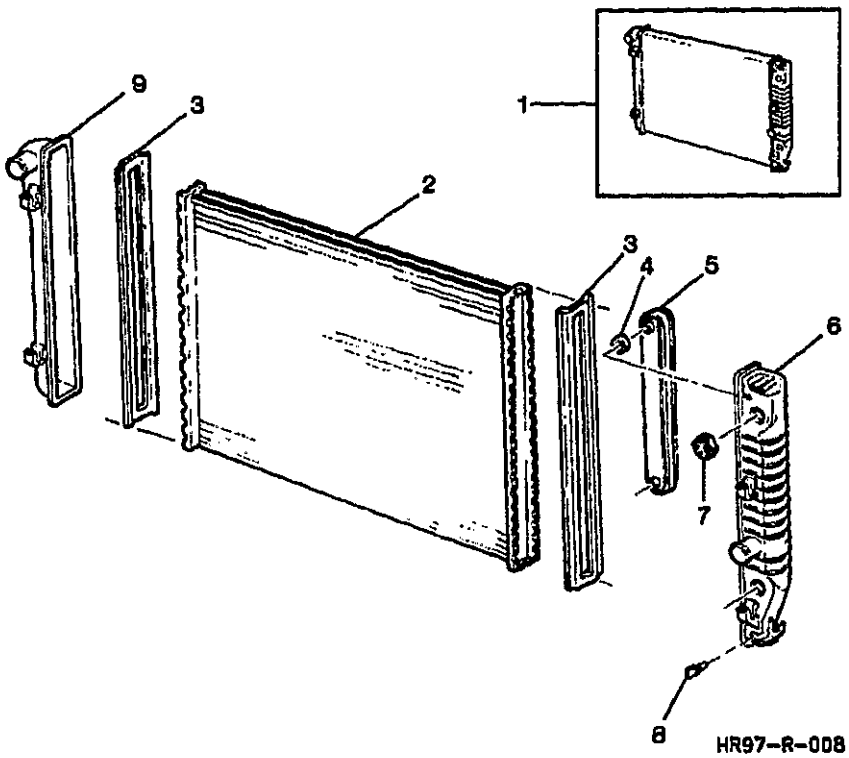

1Y01-027

1997-2001 Y RADIATOR ASM (M30)

1.	1-E10	1.219	**RADIATOR**, (CODE AAP, EAX) (CPS) (AC-DELCO #20931)	98-01	Y (LS1, M30)	1	52474697
	1-E10	1.219	**RADIATOR**, (CODE KDM) (CPS) (AC-DELCO #20889)	97	Y (LS1, M30)	1	52470606
2.	1-E10	1.219	**CORE**, RAD (INCLS 3) (AC-DELCO #10060)	97	Y (M30)	1	52465335
		N.S.	**CORE**, RAD	98-01	.....		
3.		N.S.	**GASKET**, RAD TK (PART OF 2, 5, 6, 9) (*KIT1)		.....		
4.		N.S.	**GASKET**, RAD TK (PART OF 5, 6) (*KIT1) (AC-DELCO #3042746) .		.....		
5.	1-N26	4.128	**COOLER**, TRANS FLUID (INCLS 3, 4) (AC-DELCO #52480211) ..	97	Y (M30)	1	52480211
	1-N28	4.128	**COOLER**, TRANS FLUID (INCLS 3, 4) (RAD CODES PDG, SEC, WCS)	98	Y (M30)	1	52480215
	1-N26	4.128	**COOLER**, TRANS FLUID (INCLS 3, 4) (RAD CODES PDG, SEC, WCS)	99-01	Y (LS1, M30)	1	52480215
6.	1-E10	1.219	**TANK**, RAD OTLT (INCLS 3, 4) (AC-DELCO #52477615)	97-00	Y (LS1, M30)	1	52477615
	1-E10	1.219	**TANK**, RAD OTLT (INCLS 3, 4) (AC-DELCO #52477615)	01	Y (M30)	1	52477615
7.	1-E12	1.271	**NUT**, RAD (HEX 22 X 2.5 X 6.85) (1.219)	97	Y (M30)	1	3049652

cardiagn.com

							1Y01-027
		N.S.	NUT, RAD	98-01			
8.	1-E10	1.219	PLUG, RAD DRN	97-01	Y	1	52484010
9.	1-E10	1.219	TANK, RAD INL (INCLS 3) (AC-DELCO #52477360)	97-01	Y	1	52477360

SERVICE KITS

1.	1-E10	1.219	GASKET KIT, RAD TK (1NCLS 3, 4) (AC-DELCO #52484143)	97	Y (M30)	1	52484143
	1-E10	1.219	GASKET KIT, RAD TK (1NCLS 3, 4) (INCLS TANK HEADER & COOLER TANK GASKETS) (AC-DELCO #52466234)	98-01	Y	1	52466234

RPO DEFINITIONS
LS1 – ENGINE GAS, 6 CYL, 5.7L, SFI, ALUMINUM ENGINE
M30 – TRANSMISSION,AUTOMATIC 4 SPEED,4L60E,ELECTRONIC

cardiagn.com

1Y01-016 06/01/98

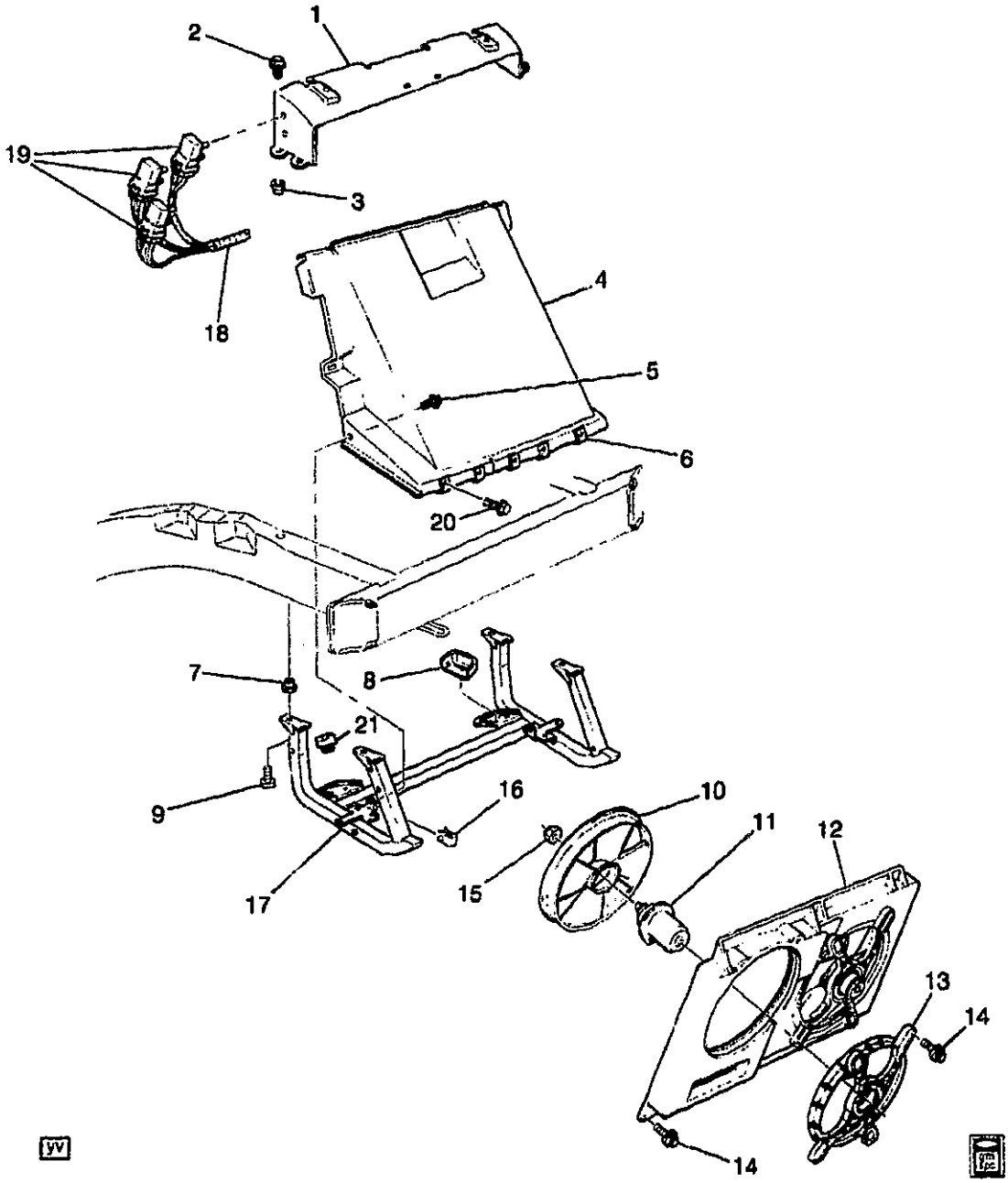

1Y01-016

1997 Y ENGINE COOLANT FAN

1.	1-E11	1.270	**SUPPORT**, RAD UPR	97	Y	1	10405439
	1-E11	1.270	**INSULATOR**, RAD UPR	97	Y (LS1, M30, MM6)	2	10188026
2.		8.900	**SCREW**, HEX M6X1X25 W/CON WA 9.8 POR (RAD SUPT)	97	.....	4	11503982
3.	1-E12	1.271	**NUT**, RAD UPR SUPT (4.665)	97	Y	4	10281487
4.	1-E11	1.270	**SUPPORT**, RAD LWR (INCLS 6) ..	97	Y	1	10254256

cardiagn.com

								1Y01-016
5.		8.977	**BOLT**, HWH, M4.2X1.41X10, 7.8 OD, ST, 6172M, ZN BR, TAP, DRILL PT (RAD SUPT BRKT)	97			2	11513568
6.		8.921	**NUT**, U-TYPE, M4.2X1.41X10.5.5X22, 15 C/E, .65-3.6 PNL THK, 1050, ZF (PART OF 4)	97			5	11515638
7.	1-N27	7.836	**NUT**, FRT BPR IMP BAR SKID PLT (3.015)	97	Y		4	10281493
8.	1-E11	1.270	**INSULATOR**, RAD LWR (POSN #1)	97	Y		LH	10278679
9.		8.900	**BOLT-HEX**, M8X1.25X30, 22 THD, 24MM OD, 9.8, 7114M (FRT BPR IMP BAR SKID PLT)	97			4	11516594
10.	1-E7	1.055	**FAN KIT**, ENG ELEC COOL (AC-DELCO #15-8470)	97	Y		LH	22098787
11.	1-E7	1.055	**MOTOR KIT**, ENG COOL FAN (AC-DELCO #15-8404)	97	Y		LH	22104439
12.	1-E12	1.277	**SHROUD KIT**, ENG ELEC COOL FAN	97	Y		1	22125220
13.	1-E7	1.055	**BRACKET**, ENG COOL FAN	97	Y		2	22125219
14.	1-E7	1.055	**BOLT KIT**, ENG COOL FAN MOT (W/WA, MOT MTG, CONTAINS 3 BOLTS)	97	Y		2	22062547
15.	1-E7	1.055	**NUT**, ENG COOL FAN BLADE (M8X1.25 LH THD, USE W/CLOCKWISE ROTATION MOTORS) (AC-DELCO #22082538)	97	Y		2	22082538
16.		8.921	**NUT**, U-TYPE, M4.2X1.41X10.5.5X22, 15 C/E, .65-3.8 PNL THK, 1050, ZF (RAD SUPT)	97			2	11515638
17.	1-N27	7.836	**PLATE**, FRT BPR IMP BAR SKID (MAY NEED NUT 10281493 AND BOLT 11515919)	97	Y		1	10400765
18.	1-M23	2.480	**HARNESS**, FWD LP WRG	97	Y (T96) (EXC T90)		1	12189881
	1-M23	2.480	**HARNESS**, FWD LP WRG	97	Y (EXC T96)		1	12189883
	1-M23	2.480	**HARNESS**, FWD LP WRG	97	Y (VD1) (EXPORT)		1	12189883
	1-M23	2.480	**HARNESS**, FWD LP WRG	97	Y (T90, VE1) (EXPORT)		1	12189884
19.	1-N15	2.530	**CONNECTOR**, INLINE-TO FWD LP HARN (BLACK) (2-WAY F W/LEADS) (3.670) (AC-DELCO #PT374)	97	Y		1	12102747
	1-N15	2.530	**CONNECTOR**, INLINE-TO FWD LP HARN (WHITE) (8-WAY F) (W/LEADS) (2.535) (AC-DELCO #PT444)	97	Y		1	12117271
	1-E7	1.055	**CONNECTOR**, MOT-ENG COOL FAN (OVAL) (2-WAY F) (W/LEADS) (2.535) (AC-DELCO #PT189)	97	Y		2	12101917
20.		8.977	**BOLT**, HWH, M4.2X1.41X2.1, 7.8 OD, ST, 6172M, ZN BR, TAP, DRILL PT (RAD SUPT LWR AT FASCIA)	97			5	11513568
21.	1-E11	1.270	**INSULATOR**, RAD LWR (POSN #2)	97	Y		RH	10188023

cardiagn.com

RPO DEFINITIONS
LS1 – ENGINE GAS, 8 CYL, 5.7L, SFI, ALUMINUM ENGINE
MM6 – TRANSMISSION MAN 6 SPD, BORG WARNER, 85MM, 1ST 2.66, 6TH 0.50, O/D
M30 – TRANSMISSION,AUTOMATIC 4 SPEED,4L60E,ELECTRONIC
T90 – LAMP,SIGNALING AND MARKER(EXPORT)
T96 – LAMP,FRONT FOG
VD1 – PROVISION OPTIONS,EUROPE(EXPORT)
VE1 – PROVISION OPTIONS,JAPAN(EXPORT)

cardiagn.com

1Y01-025 08/21/2000

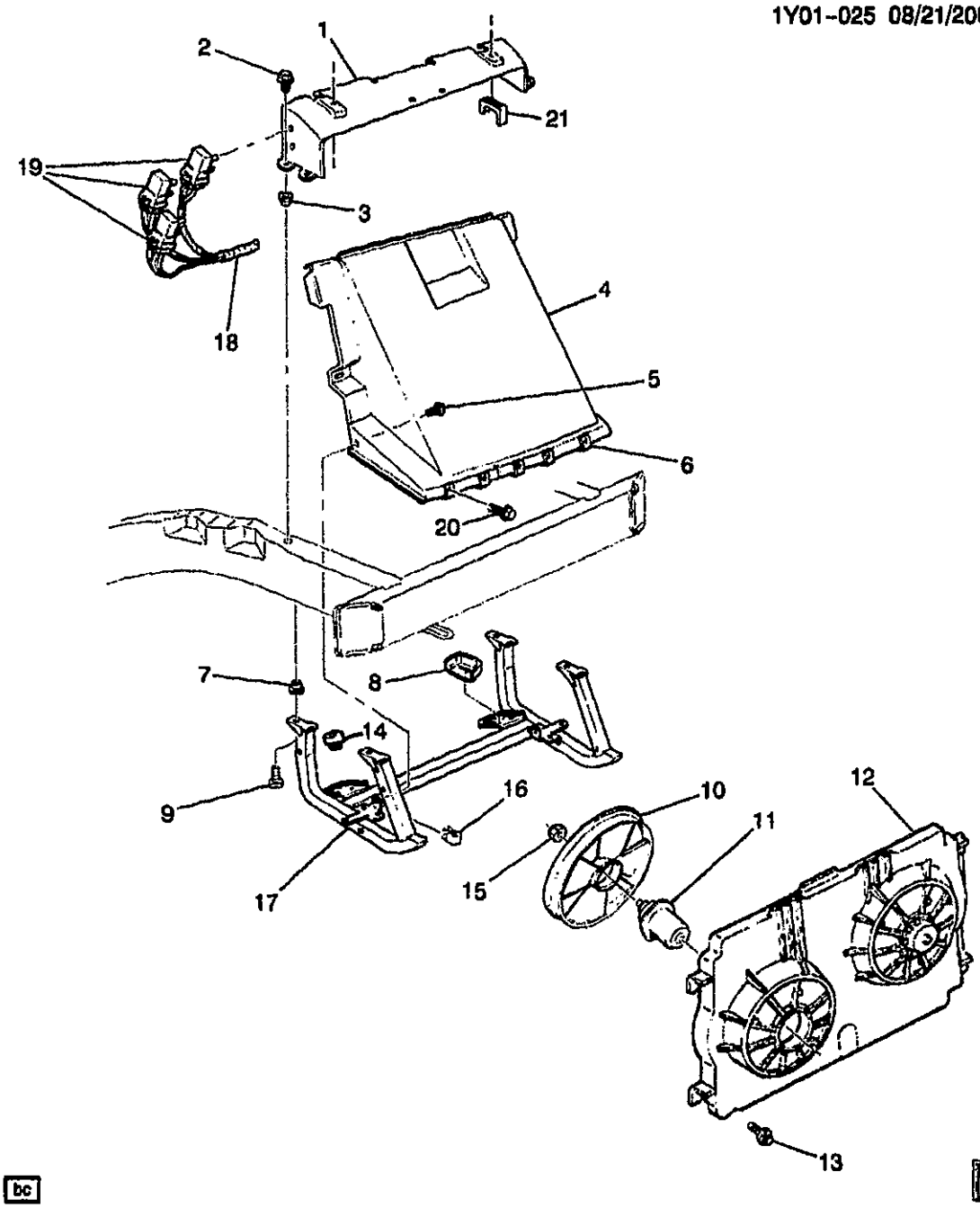

1Y01-025

1998-1999 Y ENGINE COOLANT FAN

1.	1-E11	1.270	SUPPORT, RAD UPR	98	Y	1	10405439
	1-E11	1.270	SUPPORT, RAD UPR	99	Y (MM6) (EXC B4H)	1	10405439
2.		8.900	SCREW, HEX M6X1X25 W/CON WA 9.8 POR (RAD SUPT)	98-99		4	11503982
3.	1-E12	1.271	NUT, RAD UPR SUPT (4.665)	98-99	Y	4	10281487
4.	1-E11	1.270	SUPPORT, RAD LWR (INCLS 6)	98-99	Y	1	10254256

cardiagn.com

								1Y01-025
5.		8.977	BOLT, HWH, M4.2X1.41X20, 7.8 OD, ST, 6172M, ZN BR, TAP DRILL PT (RAD SUPT BRKT)	98-99	.....	2	11513588
6.		8.921	NUT, U-TYPE, M4.2X1.41X10.5.5X22, 15 C/E, .65-3.8 PNL THK, 1050, ZF (PART OF 4)	98-99	.....	5	11515638
7.	1-N27	7.836	NUT, FRT BPR IMP BAR SKID PLT (3.015)	98-99	Y	4	10281493
8.	1-E11	1.270	INSULATOR, RAD LWR (POSN #1)	99-99	Y	LH	10278679
9.		8.900	BOLT-HEX, M8X1.25X30, 22 THD, 24MM OD, 9.8, 7114M (FRT BPR IMP BAR SKID PLT)	98-99	.....	4	11516584
10.	1-E7	1.055	FAN KIT, ENG ELEC COOL (AC-DELCO #15-8470)	98-99	Y	RH	22098787
11.	1-E7	1.055	MOTOR KIT, ENG COOL FAN (AC-DELCO #15-8404)	98-99	Y	RH	22104439
12.	1-E12	1.277	SHROUD KIT, ENG ELEC COOL FAN	98-99	Y (LS1)	1	12365307
13.	1-E7	1.055	BOLT KIT, ENG COOL FAN MOT (W/WA. MOT MTG, CONTAINS 3 BOLTS)	98-99	Y	2	22062547
14.	1-E11	1.270	INSULATOR, RAD LWR (POSN #2)	98-99	Y	RH	10188023
15.	1-E7	1.055	NUT, ENG COOL FAN BLADE (M8X1.25 LH THD, USE W/CLOCKWISE ROTATION MOTORS) (AC-DELCO #22082538)	98-99	Y	2	22082538
16.		8.921	NUT, U-TYPE, M4.2X1.41X10.5.5X22, 15 C/E, .65-3.8 PNL THK, 1050, ZF (RAD SUPT)	98-99	.....	2	11515638
17.	1-N27	7.836	PLATE, FRT BPR IMP BAR SKID (MAY NEED NUT 10281493 AND BOLT 11515919)	98-99	Y	1	10400765
18.	1-M23	2.480	HARNESS, FWD LP WRG	98	Y (T96) (EXC JAG, T90)	1	12163322
	1-M23	2.480	HARNESS, FWD LP WRG	98	Y (EXC JAG, T96)	1	12163324
	1-M23	2.480	HARNESS, FWD LP WRG	98	Y (JAG, T96) (EXC JL4, T90)	1	12189515
	1-M23	2.480	HARNESS, FWD LP WRG	98	Y (JAG) (EXC JL4, T96)	1	12189517
	1-M23	2.480	HARNESS, FWD LP WRG	98	Y (JAG, JL4, T96) (EXC T90)	1	12189518
	1-M23	2.480	HARNESS, FWD LP WRG	98	Y (JAG, JL4) (EXC T96)	1	12189520
	1-M23	2.480	HARNESS, FWD LP WRG	99	Y07-67 (T96) (EXC JL4, T90)	1	12189973
	1-M23	2.480	HARNESS, FWD LP WRG	99	Y07-67 (EXC JL4, T90, T96)	1	12189974
	1-M23	2.480	HARNESS, FWD LP WRG	99	Y (JL4, T96) (EXC T90) .	1	12189976
	1-M23	2.480	HARNESS, FWD LP WRG	99	Y07-67 (JL4) (EXC T90, T96)	1	12189977
	1-M23	2.480	HARNESS, FWD LP WRG	99	Y37 (T96) (EXC JL4) ...	1	12189973
	1-M23	2.480	HARNESS, FWD LP WRG	99	Y37 (NV7) (EXC JL4, T96)	1	12189974
	1-M23	2.480	HARNESS, FWD LP WRG	99	Y37 (EXC JL4, NV7, T96)	1	12189979

cardiagn.com

							1Y01-025
	1-M23	2.460	**HARNESS**, FWD LP WRG	99	Y07-67 (T90) (EXC JL4) (EXPORT)	1	12189975
	1-M23	2.460	**HARNESS**, FWD LP WRG	99	Y07-67 (JL4, T90) (EXPORT)	1	12189978
19.	1-N15	2.530	**CONNECTOR**, INLINE-TO FWD LP HARN (BLACK) (2-WAY F W/LEADS) (3.670) (AC-DELCO #PT374)	98	Y	1	12102747
	1-N15	2.530	**CONNECTOR**, INLINE-TO FWD LP HARN (WHITE) (8-WAY F) (W/LEADS) (2.535) (AC-DELCO #PT444)	98-99	Y	1	12117271
	1-N15	2.530	**CONNECTOR**, INLINE-TO FWD LP HARN (BLACK) (10-WAY F) (W/LEADS) (AC-DELCO #PT588)	98-99	Y	1	12125676
	1-N15	2.530	**CONNECTOR**, INLINE-TO FWD LP HARN (20-WAY F) (W/O LEADS)	98-99	Y	1	12160280
	1-N15	2.530	**CONNECTOR**, INLINE-TO FWD LP HARN (BLACK) (2-WAY F W/LEADS) (3.670) (AC-DELCO #PT374)	99	Y07-67	1	12102747
	1-N15	2.530	**CONNECTOR**, INLINE-TO FWD LP HARN (BLACK) (2-WAY F W/LEADS) (3.670) (AC-DELCO #PT374)	99	Y37 (TR9)	1	12102747
	1-E7	1.055	**CONNECTOR**, MOT-ENG COOL FAN (OVAL) (2-WAY F) (W/LEADS) (2.535) (AC-DELCO #PT189)	98-99	Y	2	12101917
20.		8.977	**BOLT**, HWH, M4.2X1.41X20, 7.8 OD, ST, 6172M, ZN BR, TAP, DRILL PT (RAD SUPT) (LWR AT FASCIA)	98	.....	5	11513588
		8.977	**BOLT**, HEX W/WA, M4.2X1.41X25, N0 (RAD SUPT) (LWR AT FASCIA)	99	.....	5	11515429
21.	1-E11	1.270	**INSULATOR**, RAD UPR	98	Y	2	10188026
	1-E11	1.270	**INSULATOR**, RAD UPR	99	Y (LS1, M30, MM6)	2	10188026

RPO DEFINITIONS
B4H – MODIFICATION-NOISE CONTROL, EXPORT
JAG – BRAKE PROVISIONS ABS LOCATION
JL4 – CONTROL ACTIVE BRAKE
LS1 – ENGINE GAS, 8 CYL, 5.7L, SFI, ALUMINUM ENGINE
MM6 – TRANSMISSION MAN 6 SPD, BORG WARNER, 85MM, 1ST 2.66, 6TH 0.50, O/D
M30 – TRANSMISSION,AUTOMATIC 4 SPEED,4L60E,ELECTRONIC
NV7 – STEERING,POWER,VARIABLE EFFORT
TR9 – LAMP GROUP,COURTESY
T90 – LAMP,SIGNALING AND MARKER(EXPORT)
T96 – LAMP,FRONT FOG

cardiagn.com

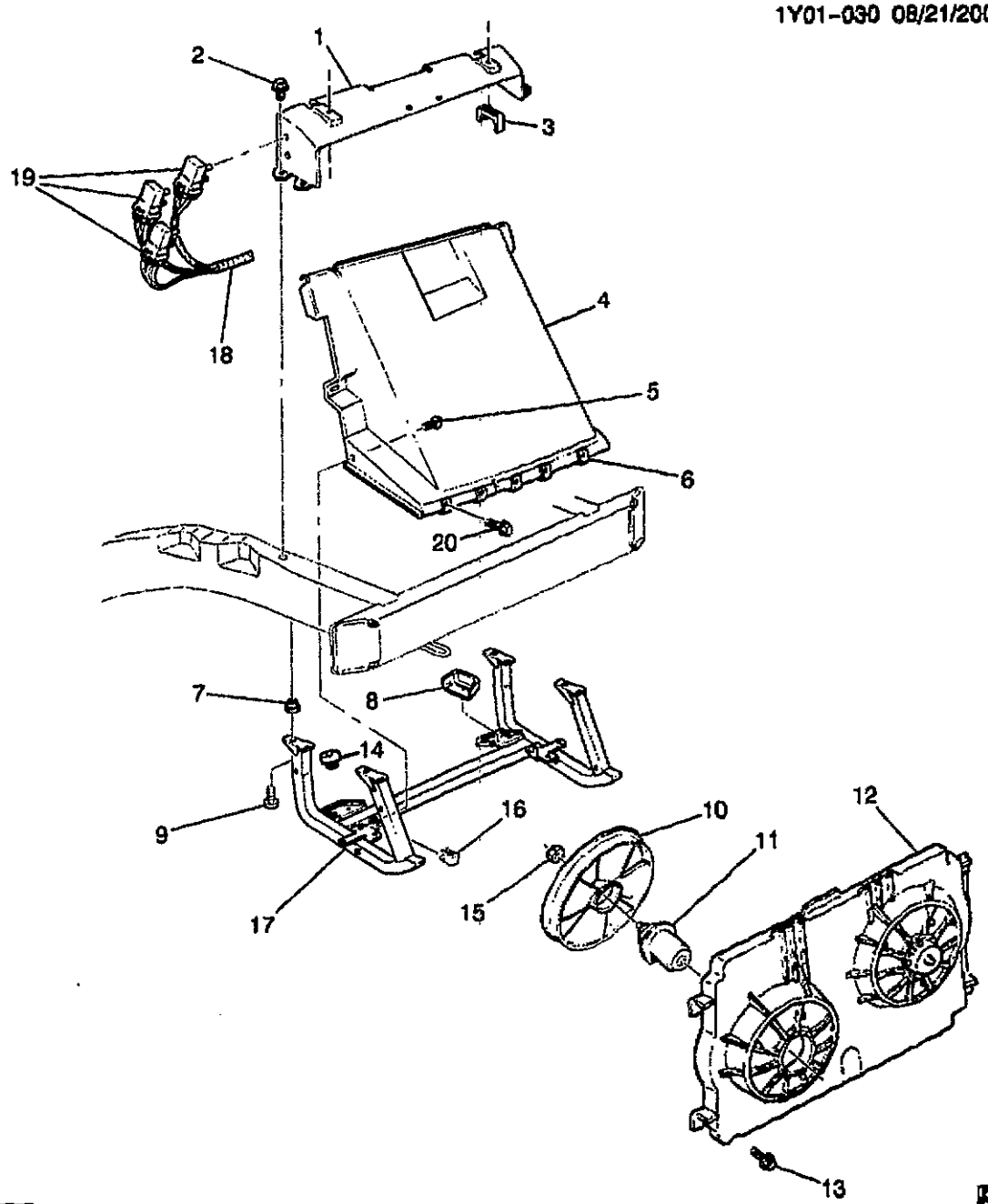

bc

1Y01-030

2000-2001 Y ENGINE COOLANT FAN

1.	1-E11	1.270	SUPPORT, RAD UPR	00-01	Y (MM6) (EXC B4H)	1	10405439
	1-E11	1.270	SUPPORT, RAD UPR	01	Y (M12)	1	10405439
	1-E11	1.270	SUPPORT, RAD UPR	01	Y (M30)	1	10405439
2.	1-E12	1.271	BOLT, RAD SUPT (M6.3X1.27-25 HEX HD) (7.833)	00-01	Y	4	10284014
3.	1-E11	1.270	INSULATOR, RAD UPR	00-01	Y (LS1, M30, MM6)	2	10188026
4.	1-E11	1.270	SUPPORT, RAD LWR (INCLS 6)	00-01	Y	1	10254256

cardiagn.com

							1Y01-030
5.		8.977	**BOLT**, HWH, M4.2X1.41X20, 7.8 OD, ST, 6172M, ZN BR, TAP, DRILL PT (RAD SUPT BRKT)	00-01	.....	2	11513568
6.		8.921	**NUT**, U-TYPE, M4.2X1.41X10.5.5X22, 15 C/E, .65-3.8 PNL THK, 1050, ZF (PART OF 4)	00-01	.....	5	11515638
7.	1-N27	7.836	**NUT**, FRT BPR IMP BAR SKID PLT (3.015)	00-01	Y	4	10281493
8.	1-E11	1.270	**INSULATOR**, RAD LWR (POSN #1)	00-01	Y	LH	10278679
9.		8.900	**BOLT-HEX**, M8X1.25X30, 22 THD, 24MM OD, 9.8, 7114M (FRT BPR IMP BAR SKID PLT)	00-01	.....	4	11516594
10.	1-E7	1.055	**FAN KIT**, ENG ELEC COOL (AC-DELCO #15-8470)	00-01	Y	LH	22098787
11.	1-E7	1.055	**MOTOR KIT**, ENG COOL FAN (AC-DELCO #15-8404)	00-01	Y	LH	22104439
12.	1-E12	1.277	**SHROUD KIT**, ENG ELEC COOL FAN	00	Y (LS1)	1	12365307
	1-E12	1.277	**SHROUD KIT**, ENG ELEC COOL FAN	01	Y	1	12365307
13.	1-E7	1.055	**BOLT KIT**, ENG COOL FAN MOT (W/WA, MOT MTG, CONTAINS 3 BOLTS)	00-01	Y	2	22062547
14.	1-E11	1.270	**INSULATOR**, RAD LWR (POSN #2)	00-01	Y	RH	10188023
15.	1-E7	1.055	**NUT**, ENG COOL FAN BLADE (M8X1.25 LH THD, USE W/CLOCKWISE ROTATION MOTORS) (AC-DELCO #22082538)	00-01	Y	2	22082538
16.		8.921	**NUT**, U-TYPE, M4.2X1.41X10.5.5X22, 15 C/E, .65-3.8 PNL THK, 1050, ZF (RAD SUPT)	00-01	.....	2	11515638
17.	1-N27	7.836	**PLATE**, FRT BPR IMP BAR SKID (MAY NEED NUT 10281493 AND BOLT 11515919)	00-01	Y	1	10400765
18.	1-M23	2.480	**HARNESS**, FWD LP WRG	00	Y07-67 (EXC JL4, T90)	1	15329403
	1-M23	2.480	**HARNESS**, FWD LP WRG	00	Y (JL4) (EXC T90)	1	15329406
	1-M23	2.480	**HARNESS**, FWD LP WRG	00	Y37 (EXC JL4)	1	15329403
	1-M23	2.480	**HARNESS**, FWD LP WRG (2ND DSN USED ON/AFTER VIN #15107689, (1ST DSN 10448116))	01	YY07-67 (JL4) (EXC T90) (2ND DES)	1	10310796
	1-M23	2.480	**HARNESS**, FWD LP WRG (2ND DSN USED ON/AFTER VIN #15107689, (1ST DSN 10448118))	01	YY07-67 (JL4, T90) (2ND DES)	1	10310798
	1-M23	2.480	**HARNESS**, FWD LP WRG (1ST DSN USED B/4 VIN #15107689, (2ND DSN 10310796))	01	YY07-67 (JL4) (EXC T90) (1ST DES)	1	10448116
	1-M23	2.480	**HARNESS**, FWD LP WRG (1ST DSN USED B/4 VIN #15107689, (2ND DSN 10310798))	01	YY07-67 (JL4, T90) (1ST DES)	1	10448116
	1-M23	2.480	**HARNESS**, FWD LP WRG	01	YY37	1	10310796
	1-M23	2.480	**HARNESS**, FWD LP WRG	01	YY37	1	10448116

cardiagn.com

							1Y01-030
	1-M23	2.480	HARNESS, FWD LP WRG	00	Y07-67 (T90) (EXC JL4) (EXPORT)	1	15329405
	1-M23	2.480	HARNESS, FWD LP WRG	00	Y07-67 (JL4, T90) (EXPORT)	1	15329408
19.	1-N15	2.530	CONNECTOR, INLINE-TO FWD LP HARN (WHITE) (8-WAY F) (W/LEADS) (2.535) (AC-DELCO #PT444)	00-01	Y	1	12117271
	1-N15	2.530	CONNECTOR, INLINE-TO FWD LP HARN (BLACK) (10-WAY F) (W/LEADS) (AC-DELCO #PT588)	00-01	Y	1	12125676
	1-N15	2.530	CONNECTOR, INLINE-TO FWD LP HARN (20-WAY F) (W/O LEADS)	00	Y	1	12160280
	1-N15	2.530	CONNECTOR, INLINE-TO FWD LP HARN (BLACK) (2-WAY F W/LEADS) (3.670) (AC-DELCO #PT374)	00	Y07-67	1	12102747
	1-N15	2.530	CONNECTOR, INLINE-TO FWD LP HARN (BLACK) (2-WAY F W/LEADS) (3.670) (AC-DELCO #PT374)	00	Y37 (TR9)	1	12102747
	1-N15	2.530	CONNECTOR, INLINE-TO FWD LP HARN (1-WAY M) (W/LEAD) (BLACK) (AC-DELCO #PT1223)	00	Y	1	12085669
	1-N15	2.530	CONNECTOR, INLINE-TO FWD LP HARN (BLACK) (2-WAY F W/LEADS) (2.383) (AC-DELCO #PT169)	01	Y (MM6, M30)	1	12101899
	1-N15	2.530	CONNECTOR, INLINE-TO FWD LP HARN (BLACK) (2-WAY F W/LEADS) (3.670) (AC-DELCO #PT374)	01	Y	1	12102747
	1-N15	2.530	CONNECTOR, INLINE-TO FWD LP HARN (10-WAY F) (13.100) ..	01	Y	1	15326842
	1-N15	2.530	CONNECTOR, INLINE-TO FWD LP HARN (10-WAY M) (2.483) ...	01	Y	1	15326847
	1-N15	2.530	CONNECTOR, INLINE-TO FWD LP HARN	01	YY67 (M30, CJ2, N37) (EXC T89)	1	15326285
	1-N15	2.530	CONNECTOR, INLINE-TO FWD LP HARN (RR) (16 WAY FEMALE) (AC-DELCO #PT1463)	01	YY67	1	15306410
20.		8.977	BOLT, HEX W/WA, M4.2X1.41X25, N0 (RAD SUPT) (LWR AT FASCIA)	00-01	.....	5	11515429

RPO DEFINITIONS
B4H – MODIFICATION-NOISE CONTROL, EXPORT
CJ2 – HVAC SYSTEM AIR CONDITIONER FRT, AUTO TEMP CONT, AUX TEMP CONT
JL4 – CONTROL ACTIVE BRAKE
LS1 – ENGINE GAS, 8 CYL, 5.7L, SFI, ALUMINUM ENGINE
MM6 – TRANSMISSION MAN 6 SPD, BORG WARNER, 65MM, 1ST 2.66, 6TH 0.50, O/D
M12 – TRANSMISSION MAN 6 SPD, TREMEC, 85MM, 1ST 2.97, 6TH 0.57, O/D
M30 – TRANSMISSION,AUTOMATIC 4 SPEED,4L60E,ELECTRONIC
N37 – STEERING COLUMN,TILT AND TELESCOPING
TR9 – LAMP GROUP,COURTESY
T89 – LAMP,TAIL AND STOP(EXPORT)
T90 – LAMP,SIGNALING AND MARKER(EXPORT)

cardiagn.com

1Y01-026 05/27/98

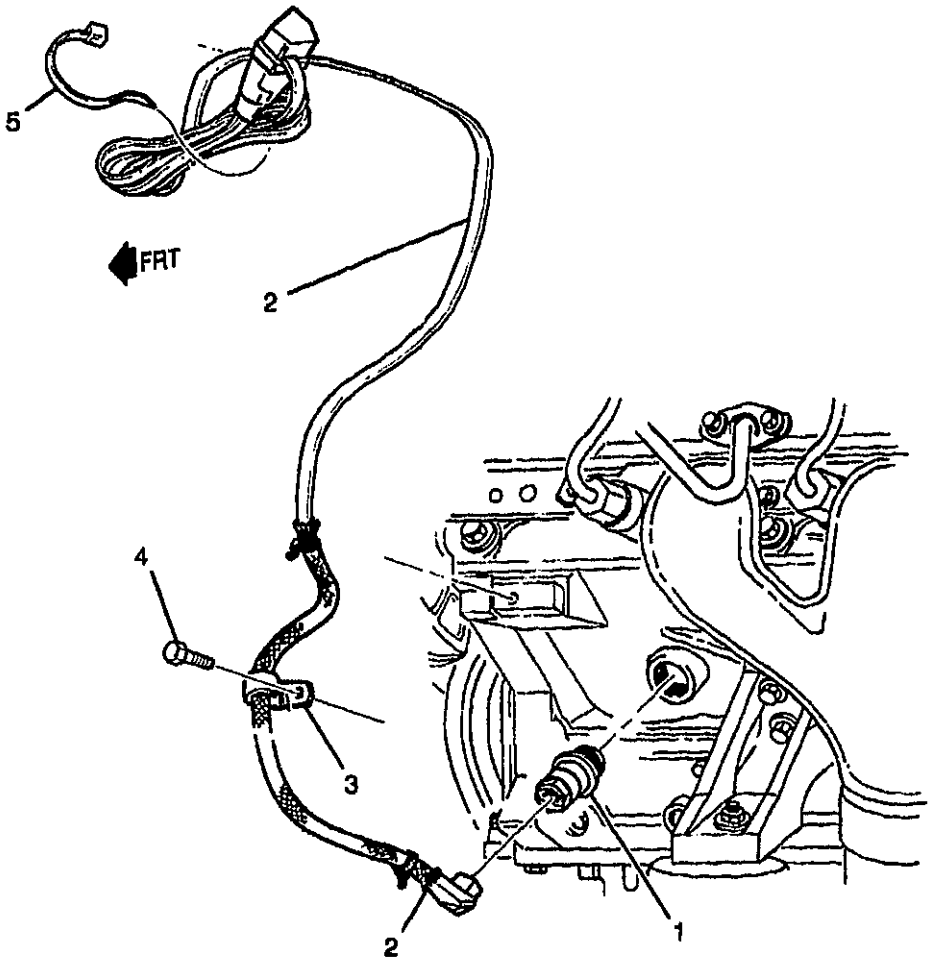

YV

1Y01-026

1997-2001 Y ENGINE BLOCK HEATER (K05)

1.	1-E9	1.152	**HEATER**, ENG COOL	97-98	Y (K05)	1	12558510
	1-E9	1.152	**HEATER**, ENG COOL	99-01	Y	1	12560179
2.	1-E9	1.152	**CORD**, ENG COOL HTR (INCLS 3)	97-01	Y (K05)	1	10408653
3.		N.S.	**CLIP**, ENG COOL HTR CORD (PART OF 2)			1	
4.		8.900	**SCREW**, HEX M10X1.5X16 9.8 PE (ENG COOL HTR CORD CLIP)	97-01		1	11513783
5.		6.965	**STRAP**, ADJ TIE (ENG BLK HTR CORD) (AC-DELCO #12337820)	97-01		1	12337820

RPO DEFINITIONS
K05 - HEATER,ENGINE BLOCK

cardiagn.com

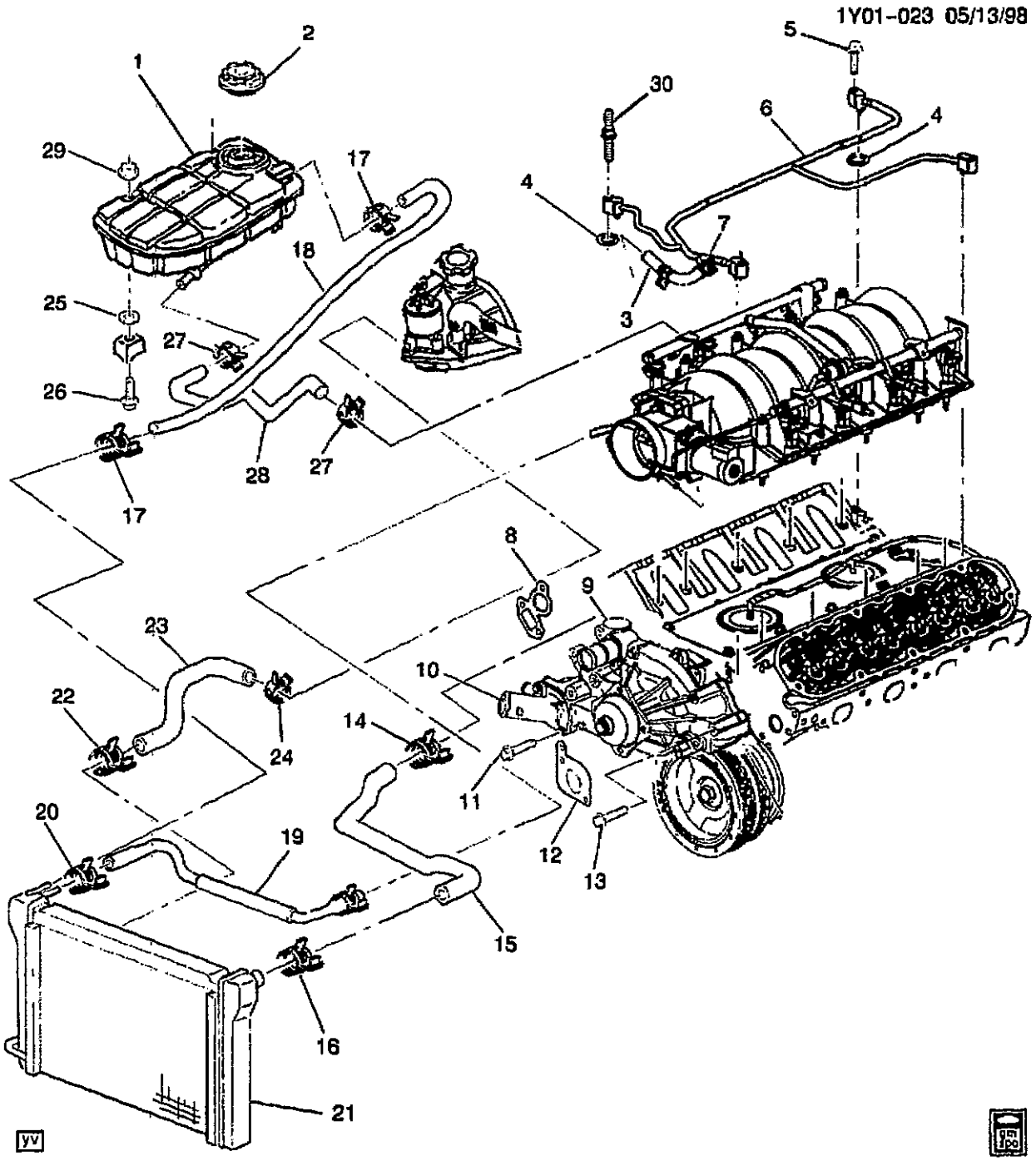

1997–2001 Y HOSES & PIPES/RADIATOR

1.	1–E11	1.240	TANK, RAD SURGE (INCLS LVL SENSOR) (AC–DELCO #10405218)	97–99	Y	1	10405218
	1–E11	1.240	TANK, RAD SURGE (AC–DELCO #10430189)	00–01	Y	1	10430189

cardiagn.com

							1Y01-023
2.	1-E11	1.240	**CAP**, RAD SURGE TK (AC-DELCO #RC75)	97-99	Y	1	10296465
	1-E11	1.240	**CAP**, RAD SURGE TK (AC-DELCO #RC87)	00-01	Y	1	25713160
3.	1-E8	1.097	**HOSE**, ENG COOL AIR BL (PART OF 6)	99	Y (LS1)	1	12556443
	1-E8	1.097	**HOSE**, ENG COOL AIR BL (PART OF 6)	00	Y (LS1)	1	12562165
	1-E8	1.097	**HOSE**, ENG COOL AIR BL (PART OF 6)	01	Y (LS1)	1	12568476
	1-E8	1.097	**HOSE**, ENG COOL AIR BL (PART OF 6)	01	Y (LS6)	1	12568476
4.	1-E8	1.097	**SEAL**, ENG COOL AIR BL PIPE (O RING) (PART OF 6)	97-01	Y (LS1)	2	12551933
	1-E8	1.097	**SEAL**, ENG COOL AIR BL PIPE (O RING) (PART OF 6)	01	Y (LS6)	2	12551933
5.		8.900	**BOLT**, METRIC HEX FLG HD (M6X1X30) (POR 9.8) (ENG COOL AIR BL PIPE)	97-01		4	11514008
6.	1-E8	1.097	**PIPE**, ENG COOL AIR BL (INCLS 3, 4, 7)	97-99	Y (LS1)	1	12557538
	1-E8	1.097	**PIPE**, ENG COOL AIR BL (INCLS 3, 4, 7)	00	Y (LS1)	1	12562169
	1-E8	1.097	**PIPE**, ENG COOL AIR BL (INCLS 3, 4, 7)	01	Y (LS1)	1	12568478
	1-E8	1.097	**PIPE**, ENG COOL AIR BL (INCLS 3, 4, 7)	01	Y (LS6)	1	12568478
7.		8.948	**CLAMP**, SPRG BAND, 14.2MM, 9/16 OD HOSE, POR (PART OF 6)	97-01		2	25526358
8.	1-E8	1.079	**GASKET**, W/PMP (PART OF 9)	97-98	Y (LS1)	2	12559548
	1-E8	1.079	**GASKET**, W/PMP (PART OF 9)	99-01	Y (LS1)	1	12559271
	1-E8	1.079	**GASKET**, W/PMP (PART OF 9)	01	Y (LS6)	1	12559271
9.	1-E9	1.069	**PUMP KIT**, WAT (INCLS 8) (LESS PRESS-ON STYLE PULLEY) (AC-DELCO #251-602)	99	Y (LS1)	1	12456112
	1-E8	1.069	**PUMP KIT**, WAT (INCLS 8) (AC-DELCO #251-615)	00-01	Y (LS1)	1	12458934
	1-E8	1.069	**PUMP KIT**, WAT (INCLS 8) (AC-DELCO #251-615)	01	Y (LS6)	1	12458934
10.	1-E8	1.073	**INLET**, W/PMP (INCLS 12) (INCLS INLET, THERMOSTAT, SEAL, VALVE, RET)	97-01	Y (LS1)	1	12562740
	1-E8	1.073	**INLET**, W/PMP (INCLS 12) (INCLS INLET, THERMOSTAT, SEAL, VALVE, RET)	01	Y (LS6)	1	12562740
11.	1-E8	1.079	**BOLT**, W/PMP (M8X1.25X82.6, 31.8 THD, 17 OD, 10.9, GM7114M MZF)	97-01	Y (LS1)	6	12551926
	1-E8	1.079	**BOLT**, W/PMP (M8X1.25X82.6, 31.8 THD, 17 OD, 10.9, GM7114M MZF)	01	Y (LS6)	6	12551926
12.	1-E9	1.123	**SEAL**, W/PMP (PART OF 10)	97-01	Y (LS1)	1	12561155
	1-E9	1.123	**SEAL**, W/PMP (PART OF 10)	01	Y (LS6)	1	12561155
13.	1-E6	1.079	**BOLT**, W/PMP (M8X1.25X82.6, 31.8 THD, 17 OD, 10.9, GM7114M MZF)	97-01	Y (LS1)	6	12551926

cardiagn.com

							1Y01-023
	1-E8	1.079	**BOLT**, W/PMP (M8X1.25X82.6, 31.8 THD, 17 OD, 10.9, GM7114M MZF)	01	Y (LS6)	6	12551926
14.		8.948	**CLAMP**, HOSE SPRING *BLACK, 42MM – NOMINAL SIZE (RAD INL HOSE ENG)	97-01		1	11517144
15.	1-E9	1.159	**HOSE**, RAD INL	97-01	Y	1	10229479
16.		8.948	**CLAMP**, HOSE SPRING *BLACK, 42MM – NOMINAL SIZE (RAD INL HOSE RAD)	97-01		1	11517144
17.		8.948	**CLAMP**, WORM GEAR, 1/2-13/16 (RAD SURGE TK INL HOSE)	97-01		2	22527587
18.	1-E11	1.240	**HOSE**, RAD SURGE TK INL	97-01	Y	1	10229486
19.	1-N22	3.337	**HOSE**, THROT BODY HTR OTLT	97-01	Y	1	12557352
20.		8.948	**CLAMP**, SPRING BAND HOSE (M16X1) (THROT BODY HTR OTLT HOSE)	97-01		1	11516255
21.	1-E10	1.219	**RADIATOR**, (CODE AAP, EAX) (AC-DELCO #20931)	98-01	Y (LS1, M30)	1	52474697
	1-E10	1.219	**RADIATOR**, (CODE KDM) (AC-DELCO #20889)	97	Y (LS1, M30)	1	52470606
	1-E10	1.219	**RADIATOR**, (CODE KDM, BBK) (AC-DELCO #20889)	97-01	Y (LS1, MM6)	1	52470606
	1-E10	1.219	**RADIATOR**, (CODE KDM, BBK) (AC-DELCO #20889)	01	Y37 (LS6, M12)	1	52470606
22.		8.948	**CLAMP**, HOSE SPRING *BLACK, 42MM – NOMINAL SIZE (RAD OTLT HOSE RAD)	97-01		1	11517144
23.	1-E10	1.173	**HOSE**, RAD OTLT	97-01	Y	1	10229480
24.		8.948	**CLAMP**, SPR (43.5MM TO 53.0MM) NOMINAL SIZE 50MM, STAMPED "U" (RAD OTLT HOSE ENG)	97-01		1	11516239
25.		6.921	**NUT**, PUSH-ON, M6X1, SPR STL, STYLE 1, POR (RAD SURGE TK)	97-01		3	14093869
26.	1-E10	1.203	**BOLT**, RAD SURGE TK (USE AS STUD) (M6 X 1 X 24) (1.271)	97-01	Y	3	10135646
27.		8.946	**CLAMP**, SPR (25-29MM) (RAD SURGE TK OTLT HOSE)	97-01		2	10108255
28.	1-E11	1.240	**HOSE**, RAD SURGE TK OTLT	97-01	Y	1	10229491
29.		8.917	**NUT**, HEX W/CON WA 6X1X5.5 16-OD ZP9 (RAD SURGE TK)	97-01		3	11517293
30.	1-E8	1.097	**STUD**, ENG COOL AIR BL PIPE	98-01	Y (LS1)	2	12561089
	1-E8	1.097	**STUD**, ENG COOL AIR BL PIPE	01	Y (LS6)	2	12561089
	1-E8	1.097	**BOLT**, ENG COOL AIR BL PIPE (M6X1.0X30) (8.900)	97-99	Y (LS1)	4	11514008

RPO DEFINITIONS
LS1 – ENGINE GAS, 8 CYL, 5.7L, SFI, ALUMINUM ENGINE
LS6 – ENGINE GAS, 8 CYL, 5 7L, SFI, ALUMINUM ENGINE, HIGH OUTPUT
MM6 – TRANSMISSION MAN 6 SPD, BORG WARNER, 85MM, 1ST 2.66, 6TH 0.50, O/D
M12 – TRANSMISSION MAN 6 SPD, TREMEC, 85MM, 1ST 2.97, 6TH 0.57, O/D
M30 – TRANSMISSION,AUTOMATIC 4 SPEED,4L60E,ELECTRONIC

cardiagn.com

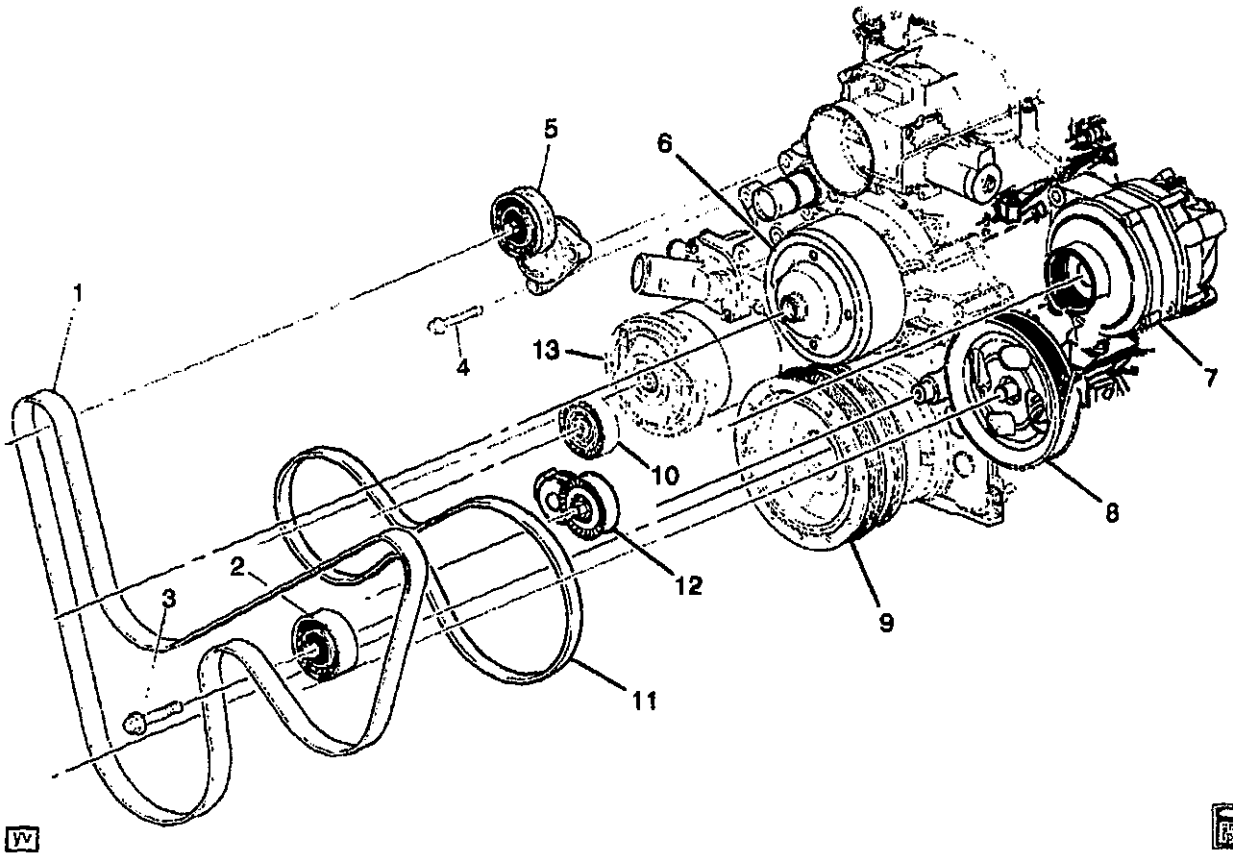

1Y01-024

1997-2001 Y TENSIONER/DRIVE BELT

1.	1-E8	1.066	BELT, W/PMP & GEN & P/S PUMP (2025MM LG)	97-01	Y	1	12561501
2.	1-E7	1.062	PULLEY, BELT IDLER	97-00	Y (LS1)	1	12564401
	1-E7	1.062	PULLEY, BELT IDLER (HAS BLACK DUST SHIELD)	01	Y (LS1)	1	12564401
	1-E7	1.062	PULLEY, BELT IDLER (HAS BLACK DUST SHIELD)	01	Y (LS6)	1	12564401
3.		N.S.	BOLT, IDLER BELT PULLEY TO GEN BRKT (PART OF PULLEY)				
4.		8.800	BOLT, HFH, M10X1.5X40, 30 THD, 22.3 OD, 10.9 MAT, 7114M FIN, MACH, RED BDY (DRV BELT TENS)	97-01		2	11515768
5.	1-E7	1.060	TENSIONER, DRV BELT	97-00	Y (LS1)	1	12559325
	1-E7	1.060	TENSIONER, DRV BELT	01	Y	1	12568181
6.	1-E7	1.062	PULLEY, W/PMP	97-98	Y (LS1)	1	12552059
		N.S.	PULLEY, W/PMP	00-01			
7.	1-M21	2.275	GENERATOR,	97-99	Y	1	10246634
	1-M21	2.275	GENERATOR,	00	Y (MM6)	1	10246634
	1-M21	2.275	GENERATOR,	01	Y (MM6, M12)	1	10246634
	1-M21	2.275	GENERATOR, (AC-DELCO #10436674)	01	Y (M30)	1	10436674
8.	1-N28	6.655	PULLEY, P/S PUMP	97-01	Y	1	12559890

cardiagn.com

								1Y01–024
9.	1–D17	0.659	**BALANCER**, CR/SHF	97–00	Y (LS1)	1	12553474
	1–D17	0.659	**BALANCER**, CR/SHF	01	Y (LS1)	1	12560115
	1–D17	0.659	**BALANCER**, CR/SHF	01	Y (LS6)	1	12560115
10.	1–N27	9.180	**PULLEY**, A/C CMPR BELT IDLER (AC–DELCO #15–4669)	97–00	Y (LS1)	1	12557334
	1–N27	9.180	**PULLEY**, A/C CMPR BELT IDLER (AC–DELCO #15–4669)	01	Y (LS1, LS6)	1	12557334
11.	1–E8	1.066	**BELT**, A/C CMPR	97–00	Y (LS1)	1	12559326
	1–E8	1.066	**BELT**, A/C CMPR	01	Y (LS1, LS6)	1	12559326
12.	1–N27	9.160	**TENSIONER**, A/C CMPR BELT ..	97–01	Y	1	12560345
13.	1–N27	9.170	**COMPRESSOR**, A/C (V7 W/CLUTCH) (AC–DELCO #15–20252)	97–01	Y	1	1137007

RPO DEFINITIONS
LS1 – ENGINE GAS, 8 CYL, 5.7L, SFI, ALUMINUM ENGINE
LS6 – ENGINE GAS, 8 CYL, 5.7L, SFI, ALUMINUM ENGINE, HIGH OUTPUT
MM6 – TRANSMISSION MAN 6 SPD, BORG WARNER, 85MM, 1ST 2.66, 6TH 0.50, O/D
M12 – TRANSMISSION MAN 6 SPD, TREMEC, 85MM, 1ST 2.97, 6TH 0.57, O/D
M30 – TRANSMISSION,AUTOMATIC 4 SPEED,4L60E,ELECTRONIC

cardiagn.com

ILLUSTRATION INDEX

	TITLE	GRID
1997–2002	Y STARTER MOTOR MOUNTING	2–F4
1997–2002	Y GENERATOR ASM	2–F5
1997	Y GENERATOR MOUNTING	2–F8
1998–2002	Y GENERATOR MOUNTING	2–F10
1997–1998	Y COIL ASM/DIRECT IGNITION	2–F12
1997–2002	Y NORMAL MAINTENANCE REPLACEMENT PARTS (LS1/5.7G)	2–F13
2001–2002	Y NORMAL MAINTENANCE REPLACEMENT PARTS (LS6/5.7S)	2–F13
1997–2002	Y ALARM SYSTEM/ANTI THEFT	2–F15
1997–2000	Y BATTERY CABLES & RELATED PARTS	2–G2
2001–2002	Y BATTERY CABLES & RELATED PARTS	2–G10
1997–2002	Y LAMPS/FRONT	2–G17
1997–2002	Y LAMPS/REAR	2–H2

cardiagn.com

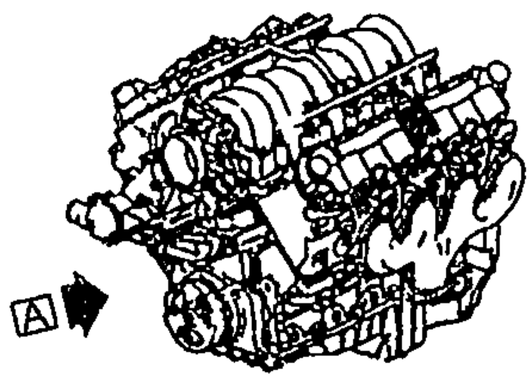

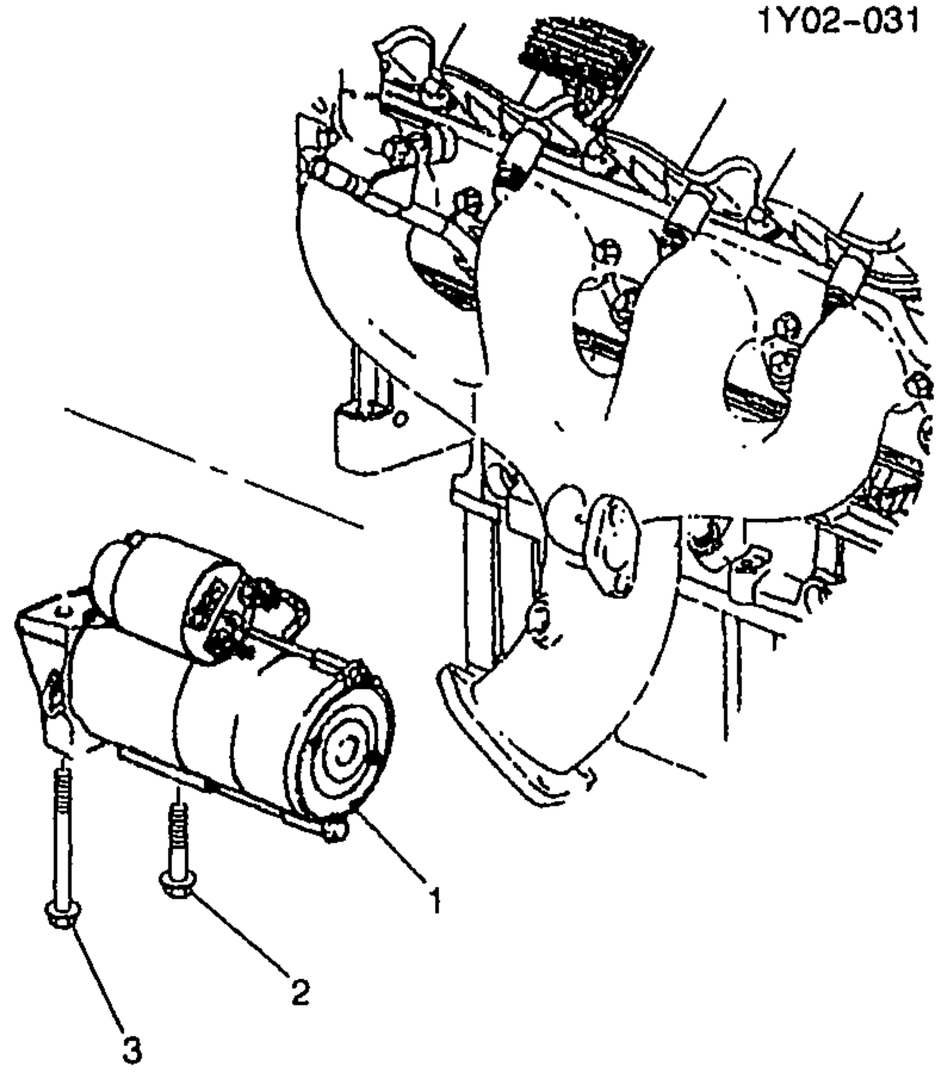

VIEW A

1Y02-031

1997-2002 Y STARTER MOTOR MOUNTING

1.	2-A8	2.041	STARTER, (REMAN) (AC-DELCO #323-1063)	97-01	Y (LS1)	1	10465385
	2-A8	2.041	STARTER, (REMAN) (AC-DELCO #323-1063)	01	Y (LS6)	1	10465385
	2-A8	2.041	STARTER, (REMAN) (AC-DELCO #323-1450)	02	Y (LS1, LS6)	1	10465547
2.	2-A8	2.042	BOLT, STRTR (INBOARD)	97-98	Y	1	12555160
	2-A8	2.042	BOLT, STRTR (INBOARD) (HFH, M10X1.5X46.5, 23.5, 19 OD, 10.9, SPECIAL)	99-02	Y	1	12561848
3.	2-A8	2.042	BOLT, STRTR (OUTBOARD) (HFH, M10X1.5X113.5, 22.5, 15 OD, 10.9)	97-98	Y	1	12558858
	2-A8	2.042	BOLT, STRTR (HFH, M10X1.5X113.5, 23.5 THD, 19.5 OD, 10.9, ZINC, MACH)	99-02	Y	1	12561387

RPO DEFINITIONS
LS1 – ENGINE GAS, 8 CYL, 5.7L, SFI, ALUMINUM ENGINE
LS6 – ENGINE GAS, 8 CYL, 5.7L, SFI, ALUMINUM, HIGH OUTPUT

cardiagn.com

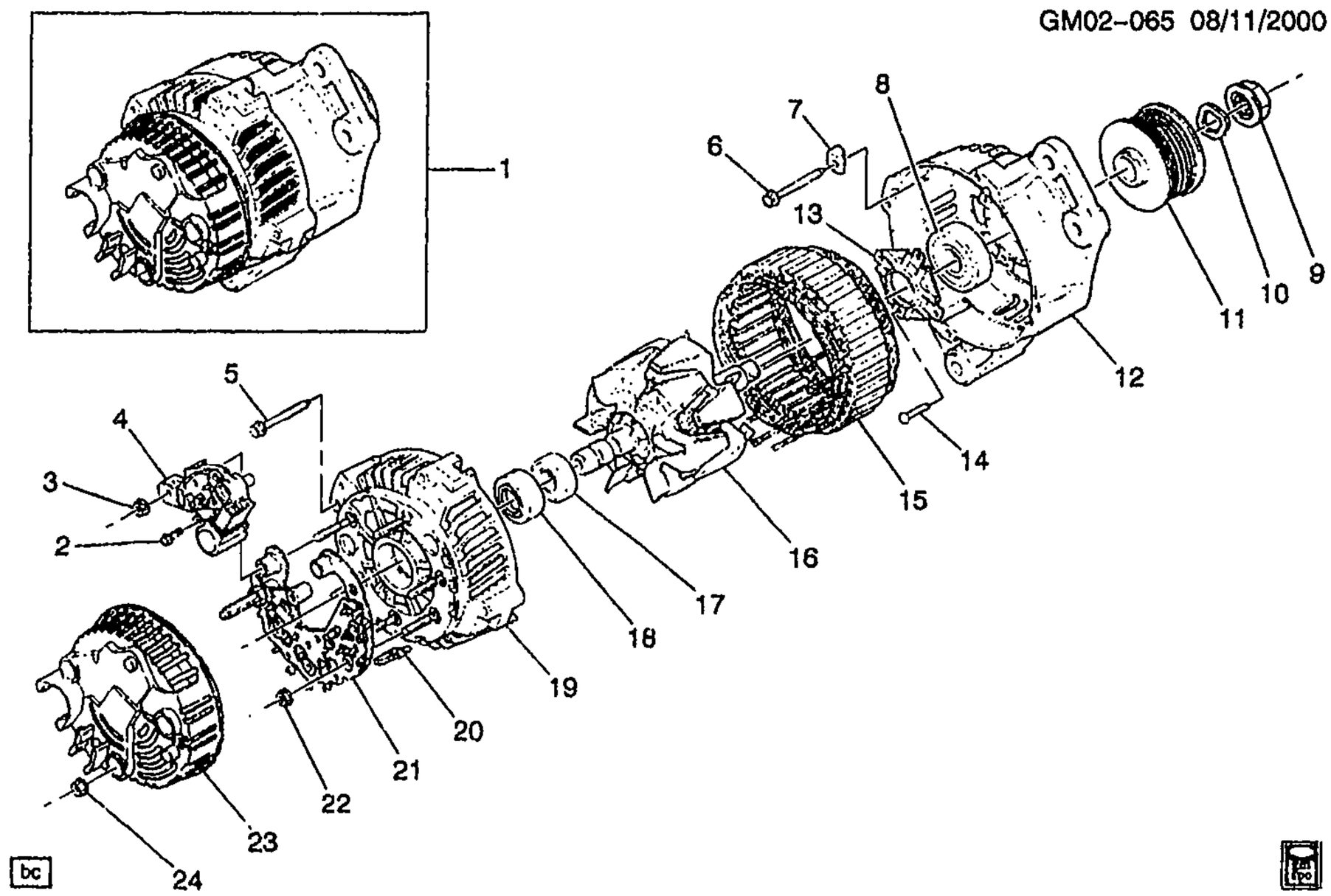

GM02-065

1997-2002 Y GENERATOR ASM

1.	2-A14	2.275	GENERATOR, (INCLS 2 THRU 24) (AC-DELCO #10246634) ...	97-99	Y	1	10246634
	2-A14	2.275	GENERATOR, (INCLS 2 THRU 24) (AC-DELCO #10246634) ...	00	Y (MM6)	1	10246634
	2-A14	2.275	GENERATOR, (INCLS 2 THRU 24) (AC-DELCO #10246634) ...	01-02	Y (MM6, M12)	1	10246634
	2-A14	2.275	GENERATOR, (INCLS 2 THRU 24)	01-02	Y (M30)	1	10316182
2.		N.S.	SCREW, REGULATOR TERMINAL (PART OF 1) (*KIT3, KIT4)		.....		
3.		N.S.	NUT, REGULATOR (PART OF 1) (*KIT3, KIT4)		.....		
4.		N.S.	REGULATOR (PART OF 1) (*KIT3)		.....		
5.		N.S.	BOLT, HOUSING THROUGH (PART OF 1)		.....		
6.		N.S.	SCREW, STATOR CLAMP (PART OF 1)		.....		
7.		N.S.	CLAMP, STATOR (PART OF 1) ...		.....		
8.		N.S.	BEARING, DRIVE END (PART OF 1)		.....		
9.		N.S.	NUT, PULLEY (PART OF 1) (*KIT1)		.....		
10.		N.S.	WASHER, PULLEY (PART OF 1) (*KIT1)		.....		

© 2001 GENERAL MOTORS SERVICE PARTS OPERATIONS-CHEVROLET-15Y

cardiagn.com

11.		N.S.	PULLEY, GENERATOR DRIVE (PART OF 1) (*KIT1)				
12.		N.S.	HOUSING, DRIVE END (PART OF 1)				
13.		N.S.	RETAINER, DRIVE END BRG (PART OF 1)				
14.		N.S.	SCREW, DRIVE END BRG RET (PART OF 1)				
15.		N.S.	STATOR (PART OF 1)				
16.		N.S.	ROTOR (PART OF 1)				
17.		N.S.	BEARING, GEN ROT SHF SLIP RING END (PART OF 1)				
18.		N.S.	SEAT, SLIP RING END BRG (PART OF 1)				
19.		N.S.	HOUSING, SLIP RING END (PART OF 1)				
20.		N.S.	INSULATOR, STATOR WIRE (PART OF 1)				
21.		N.S.	RECTIFIER BRIDGE (PART OF 1)				
22.		N.S.	NUT, RECTIFIER BRIDGE (PART OF 1)				
23.		N.S.	COVER, GENERATOR REAR (PART OF 1) (*KIT2)				
24.		N.S.	NUT, REAR COVER (PART OF 1) (*KIT2)				

SERVICE KITS

1.	2-A14	2.274	PULLEY KIT, GEN (INCLS 9, 10, 11) (INCLS PULLEY, WASHER, NUT)	97-99	Y	1	12533437
	2-A14	2.274	PULLEY KIT, GEN (INCLS 9, 10, 11) (INCLS PULLEY, WASHER, NUT)	00-02	Y (MM6)	1	12533437
2.	2-A14	2.297	COVER KIT, GEN SLIP RING END FRM (INCLS 23, 24) (INCLS COVER, NUTS (3)) (2.305)	97-99	Y	1	12533438
	2-A14	2.297	COVER KIT, GEN SLIP RING END FRM (INCLS 23, 24) (INCLS COVER, NUTS (3)) (2.305)	00	Y (MM6)	1	12533438
	2-A14	2.297	COVER KIT, GEN SLIP RING END FRM (INCLS 23, 24) (INCLS COVER, NUTS (3)) (2.305)	01-02	Y	1	12533438
3.	2-B14	2.500	REGULATOR KIT, VOLTAGE (INCLS 2, 3, 4) (INCLS REGULATOR, NUTS (2), SCREWS (2) (AC-DELCO #D614A)	97-99	Y	1	12533439
	2-B14	2.500	REGULATOR KIT, VOLTAGE (INCLS 2, 3, 4) (INCLS REGULATOR, NUTS (2), SCREWS (2) (AC-DELCO #D614A)	00	Y (MM6)	1	12533439

cardiagn.com

	2–B14	2.500	REGULATOR KIT, VOLTAGE (INCLS 2, 3, 4) (INCLS REGULATOR, NUTS (2), SCREWS (2) (AC–DELCO #D614A)	01–02	Y	1	12533439
4.	2–B14	2.500	ATTACHMENT KIT, VOLTAGE REG (INCLS FIVE OF ITEM 3 AND TWO OF ITEM 2) (INCLS NUTS (5), SCREWS (2), WASHERS (2), SHAFT NUTS (2) (2.277)	97–02	Y	1	12533440

RPO DEFINITIONS

MM6 – TRANSMISSION MAN 6 SPD, BORG WARNER, 85MM, 1ST 2.66, 6TH 0.50, O/D
M12 – TRANSMISSION MAN 6 SPD, TREMEC, 85MM, 1ST 2.97, 6TH 0.57, O/D
M30 – TRANSMISSION,AUTOMATIC 4 SPEED,4L60E,ELECTRONIC

cardiagn.com

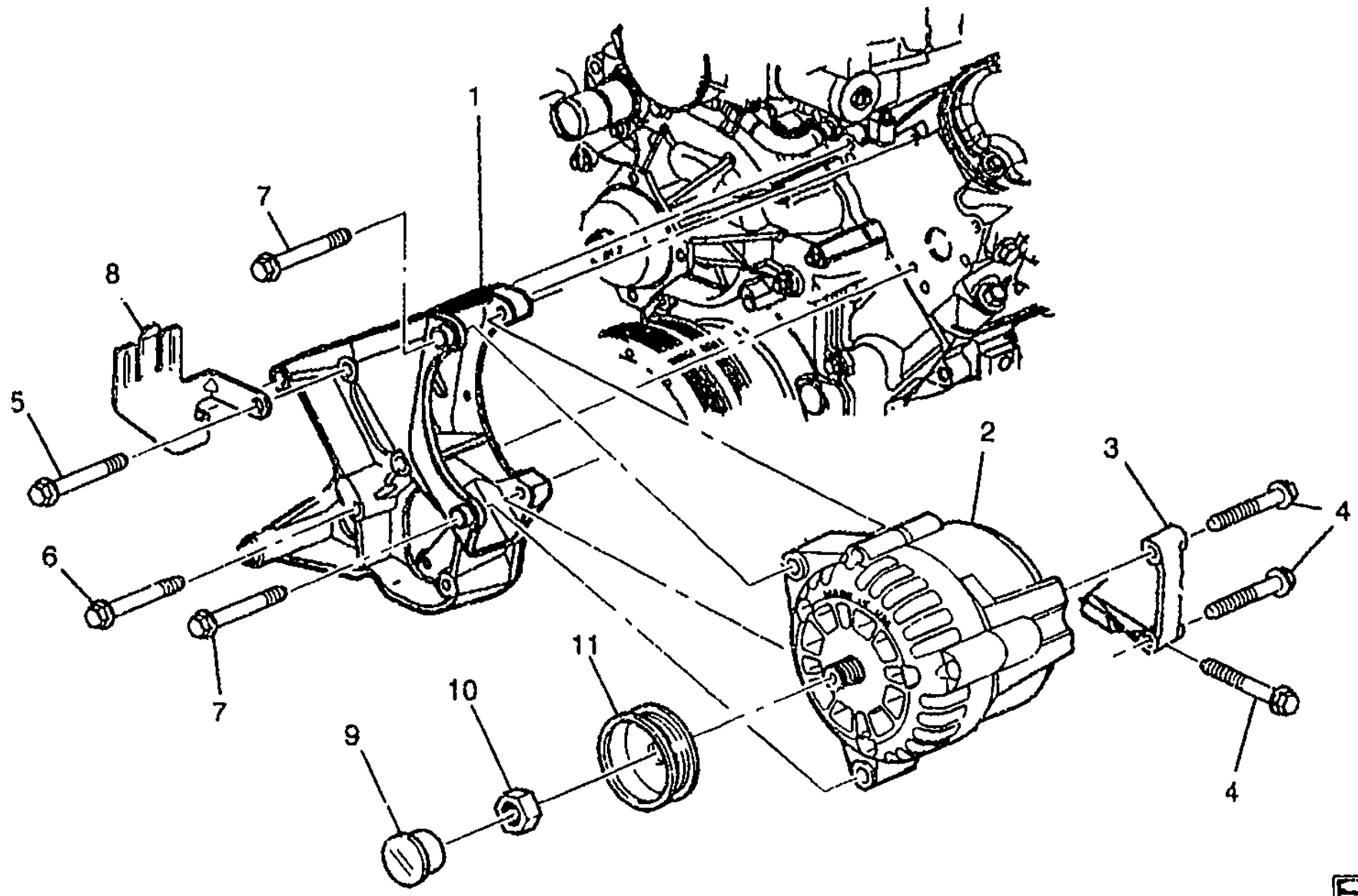

1Y02-041

1997 Y GENERATOR MOUNTING

1.	2-A14	2.277	BRACKET, GEN & P/S PUMP	97 Y	1	12555220
	2-N16	6.606	BRACKET, GEN & P/S PUMP (2.277)	97 Y	1	12555220
2.	2-A14	2.275	GENERATOR, (CPS) (AC-DELCO #10246634)	97 Y	1	10246634
		N.S.	PULLEY, GEN (KIT #1)	.....		
		N.S.	COVER, GEN SLIP RING (KIT #2)	.....		
		N.S.	REGULATOR, VOLTAGE (KIT #3)	.....		
		N.S.	ATTACHMENTS, VOLTAGE (KIT #4)	.....		
3.	2-A14	2.277	BRACKET, GEN RR	97 Y (LS1)	1	12557330
4.	2-A14	2.277	BOLT, GEN RR BRKT (TO KNUCKLE) (8.900)	97 Y	3	11516554
5.		8.900	BOLT, HFH, M10X1.5X80, 30 THD, 22.3 OD, 9.8, 7114M (GEN BRKT) (POSN #1)	97	3	11516357
6.		8.900	BOLT, HFH, M10X1.5X70, 30 THD, 22.3 OD, 9.8 MAT, 7114M FIN, MACH, REDUCED BODY (GEN BRKT) (POSN #2)	97	1	11516356
7.	2-A14	2.277	BOLT, GEN (10X1.5X95) (LWR) (9.173)	97 Y	2	24503609
8.	2-N16	6.635	BRACKET, P/S FLUID RSVR	97 Y	1	12555222

© 2001 GENERAL MOTORS SERVICE PARTS OPERATIONS - CHEVROLET - 15Y

cardiagn.com

							1Y02-041
9.	2-A14	2.305	COVER, GEN (*KIT2)	97	Y	1	10297146
10.		N.S.	NUT, GEN PULLEY (*KIT1)		.....		
11.		N.S.	PULLEY, GEN (*KIT1)		.....		

SERVICE KITS

1.	2-A14	2.274	PULLEY KIT, GEN (INCLS PULLEY, WASHER, NUT)	97	Y	1	12533437
2.	2-A14	2.297	COVER KIT, GEN SLIP RING END FRM (INCLS COVER, NUTS (3)) (2.305)	97	Y	1	12533438
3.	2-B14	2.500	REGULATOR KIT, VOLTAGE (INCLS REGULATOR, NUTS (2), SCREWS (2) (AC-DELCO #D614A)	97	Y	1	12533439
4.	2-B14	2.500	ATTACHMENT KIT, VOLTAGE REG (INCLS NUTS (5), SCREWS (2), WASHERS (2), SHAFT NUTS (2) (2.277)	97	Y	1	12533440

RPO DEFINITIONS

LS1 – ENGINE GAS, 8 CYL, 5.7L, SFI, ALUMINUM ENGINE

cardiagn.com

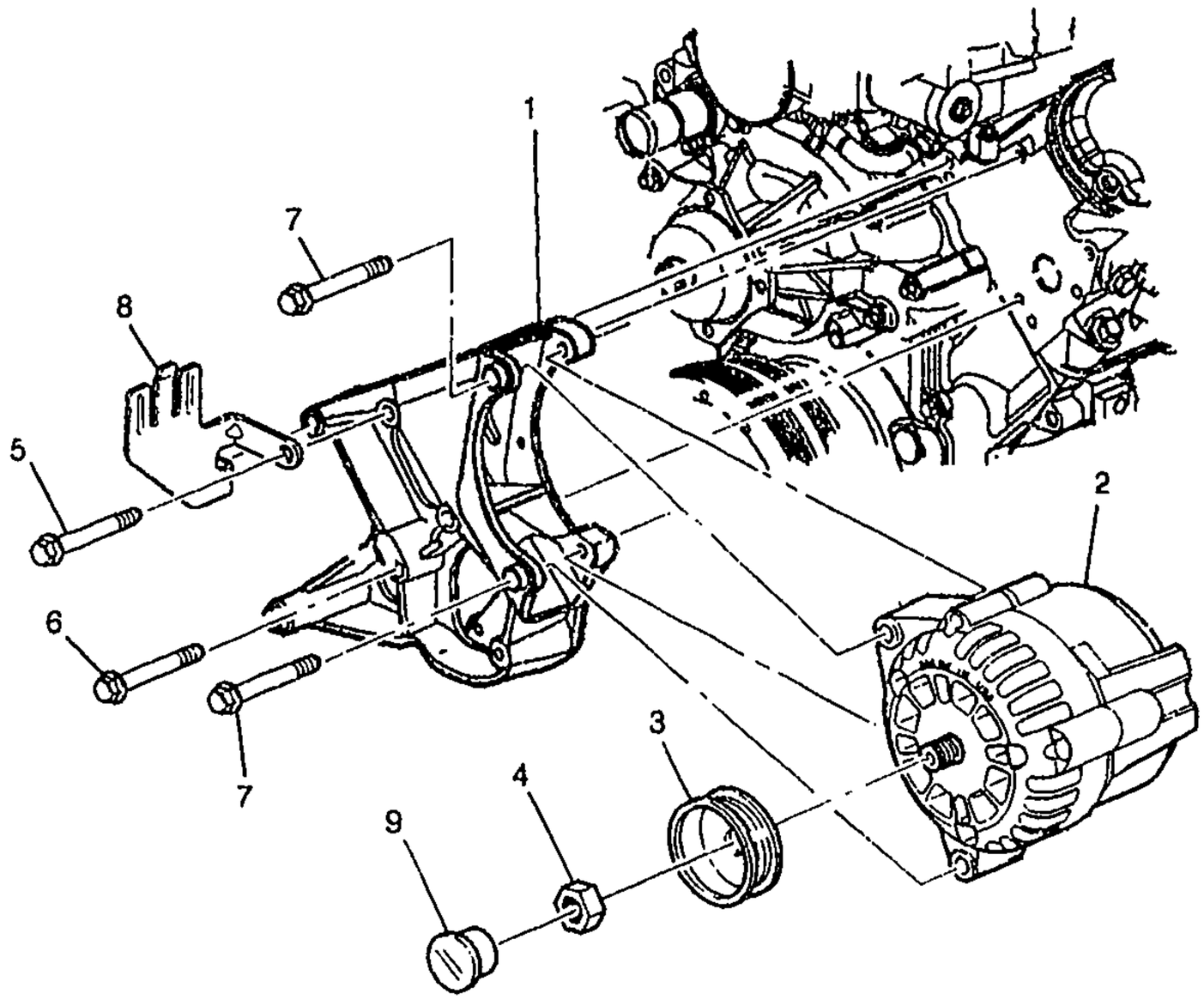

1Y02-048

1998-2002 Y GENERATOR MOUNTING

1.	2-A14	2.277	BRACKET, GEN & P/S PUMP	98-02	Y	1	12555220
	2-N16	6.606	BRACKET, GEN & P/S PUMP (2.277)	98-02	Y	1	12555220
2.	2-A14	2.275	GENERATOR, (CPS) (AC-DELCO #10246634)	98-99	Y	1	10246634
	2-A14	2.275	GENERATOR, (CPS) (AC-DELCO #10246634)	00	Y (MM6)	1	10246634
	2-A14	2.275	GENERATOR, (CPS) (AC-DELCO #10246634)	01-02	Y (MM6, M12)	1	10246634
	2-A14	2.275	GENERATOR, (CPS)	01-02	Y (M30)	1	10316182
3.		N.S.	PULLEY, GEN (*KIT1)		.....		
4.		N.S.	NUT, GEN PULLEY (*KIT1)		.....		
5.		8.900	BOLT, HFH, M10X1.5X80, 30 THD, 22.3 OD, 9.8, 7114M (GEN BRKT) (POSN #1)	98-02	.....	3	11516357
6.		8.900	BOLT, HFH, M10X1.5X70, 30 THD, 22.3 OD, 9.8 MAT, 7114M FIN, MACH, REDUCED BODY (GEN BRKT) (POSN #2)	98-02	.....	1	11516356
7.	2-A14	2.277	BOLT, GEN (10X1.5X95) (LWR) (9.173)	98-02	Y	2	24503609
8.	2-N16	6.635	BRACKET, P/S FLUID RSVR	98-02	Y	1	12555222
9.	2-A14	2.305	COVER, GEN (*KIT2)	98-00	Y	1	10297146
	2-A14	2.305	COVER, GEN (*KIT2)	01-02	Y (MM6, M12)	1	10297146

cardiagn.com

SERVICE KITS

3.	2-B14	2.500	REGULATOR KIT, VOLTAGE (PART OF 2) (INCLS REGULATOR, NUTS (2), SCREWS (2) (AC-DELCO #D614A)	98-99	Y	1	12533439
	2-B14	2.500	REGULATOR KIT, VOLTAGE (PART OF 2) (INCLS REGULATOR, NUTS (2), SCREWS (2) (AC-DELCO #D614A)	00	Y (MM6)	1	12533439
	2-B14	2.500	REGULATOR KIT, VOLTAGE (PART OF 2) (INCLS REGULATOR, NUTS (2), SCREWS (2) (AC-DELCO #D614A)	01-02	Y	1	12533439
4.	2-B14	2.500	ATTACHMENT KIT, VOLTAGE REG (PART OF 2) (INCLS NUTS (5), SCREWS (2), WASHERS (2), SHAFT NUTS (2) (2.277)	98-02	Y	1	12533440

RPO DEFINITIONS

MM6 -- TRANSMISSION MAN 6 SPD, BORG WARNER, 85MM, 1ST 2.66, 6TH 0.50, O/D
M12 -- TRANSMISSION MAN 6 SPD, TREMEC, 85MM, 1ST 2.97, 6TH 0.57, O/D
M30 -- TRANSMISSION,AUTOMATIC 4 SPEED,4L60E,ELECTRONIC

cardiagn.com

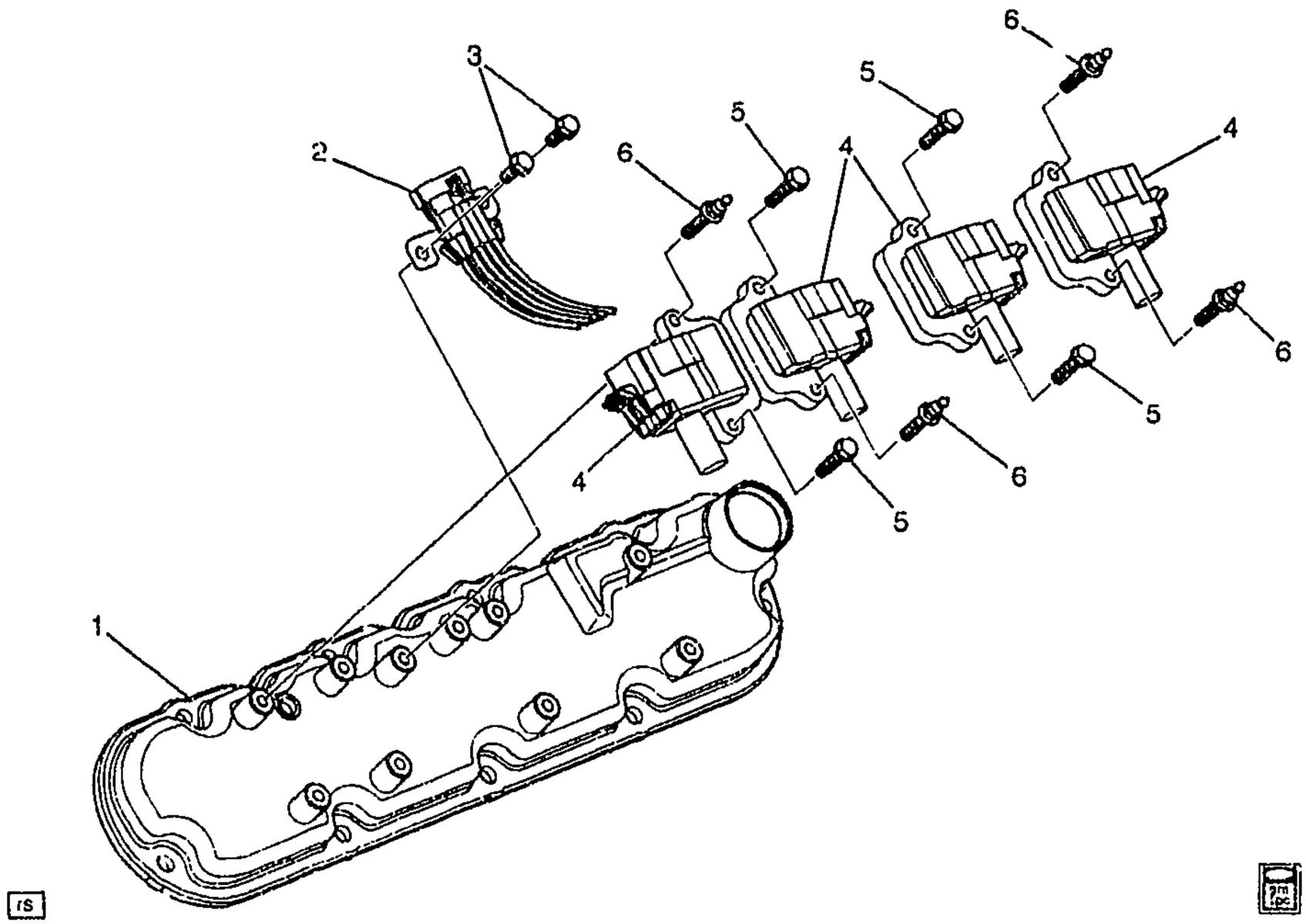

GM02-107

1997-1998 Y COIL ASM/DIRECT IGNITION

1.	2-N12	0.386	COVER, VLV RKR ARM (INCLS ATTACH BOLTS)	97-98	Y (LS1)	RH	12559603
	2-N12	0.386	COVER, VLV RKR ARM (INCLS ATTACH BOLTS)	97-98	Y (LS1)	LH	12559604
2.	2-A11	2.240	WIRE, IGN COIL (LH & RH BANKS) (PRIMARY)	97-98	Y (LS1)	2	15301401
3.		8.900	BOLT/SCREW, HFH, M6X1X10, 9.8, PZOR, 7114M, 14.2, FLG OD (WRG HARN BRKT)	97-98		4	11516421
4.	2-A8	2.170	COIL, IGN (AC-DELCO #D580)	97-98	Y (LS1)	8	12558948
5.		8.917	BOLT, M6X1X20, 9.8, PZOR, 7114M, 14.2 FLG OD (IGN COIL) (8.900) (AC-DELCO #11516423)	97-98		AR	11516423
6.	2-A8	2.183	STUD, IGN COIL (4-RH, 5-LH) (HFH, M6X1.0X40, SPECIAL HD)	97-98	Y (LS1)	9	12557539

RPO DEFINITIONS
LS1 - ENGINE GAS, 8 CYL, 5.7L, SFI, ALUMINUM ENGINE

cardiagn.com

ILLUSTRATION INTENTIONALLY LEFT BLANK

OTOU-002

1997-2002 Y NORMAL MAINTENANCE REPLACEMENT PARTS (LS1/5.7G)
2001-2002 Y NORMAL MAINTENANCE REPLACEMENT PARTS (LS6/5.7S)

NOTE: PLEASE REFER TO YOUR OWNER MANUAL FOR (NORMAL)SCHEDULED MAINTENANCE PARTS

1.	2-A11	2.270	SPARK PLUG, (AC-DELCO #41-974)	97-02	Y (LS1)	8	12563707
	2-A11	2.270	SPARK PLUG, (41-931) (AC-DELCO #41-931)	97-98	Y (LS1)	8	25162555
	2-A11	2.270	SPARK PLUG, (AC-DELCO #12)	97-98	Y (LS1)	8	25332827
	2-A11	2.270	SPARK PLUG, (AC-DELCO #41-974)	01-02	Y (LS6)	8	12563707
2.	2-D16	3.410	ELEMENT, A/CL (PAPER) (AC-DELCO #A917C)	97-02	Y (LS1)	1	25042562
	2-D16	3.410	ELEMENT, A/CL (PAPER) (AC-DELCO #A917C)	01	Y (LS6)	1	25042562
3.	2-N13	1.836	FILTER, OIL (PF44) (AC-DELCO #PF44)	97-02	Y (LS1)	1	25010633
	2-N13	1.836	FILTER, OIL (AC-DELCO #SPF44)	97-00	Y (LS1)	1	25329388
	2-N13	1.836	FILTER, OIL (AC-DELCO #UPF44)	97-00	Y (LS1)	1	25329389
	2-N13	1.836	FILTER, OIL (PF44) (AC-DELCO #PF44)	01-02	Y (LS6)	1	25010633

cardiagn.com

							OTOU-002
4.	2-A11	2.240	WIRE, SPLG (POS #1-#8 STYLE 8DDD 7.8" LONG) (2.239) (AC-DELCO #348S)	01-02	Y (LS6)	8	12192064
	2-A11	2.240	WIRE, SPLG (POS #1-#8) (STYLE 8DDD) (7.8" LONG) (2.239) (AC-DELCO #348S)	97-02	Y (LS1)	8	12192064
5.	2-D28	3.890	FILTER, FUEL (N/BRKT) (AC-DELCO #GF820)	97-98	Y (LS1)	1	10287788
	2-D28	3.890	FILTER, FUEL (W/PRESSURE REGULATOR) (AC-DELCO #GF822)	99-02	Y	1	10299146
8.	2-N13	4.197	FILTER KIT, A/TRNS FLUID (DEEP SUMP) (INCLS FILTER, GASKET, SEAL & INSTR SHT) (AC-DELCO #24208574)	97-02	Y (M30)	1	24208574
9.	2-N13	4.196	GASKET, A/TRNS FLUID PAN (AC-DELCO #8654799)	97-02	Y (M30)	1	8654799

RPO DEFINITIONS
LS1 - ENGINE GAS, 8 CYL, 5.7L, SFI, ALUMINUM ENGINE
LS6 - ENGINE GAS, 8 CYL, 5.7L, SFI, ALUMINUM, HIGH OUTPUT
M30 - TRANSMISSION,AUTOMATIC 4 SPEED,4L60E,ELECTRONIC

cardiagn.com

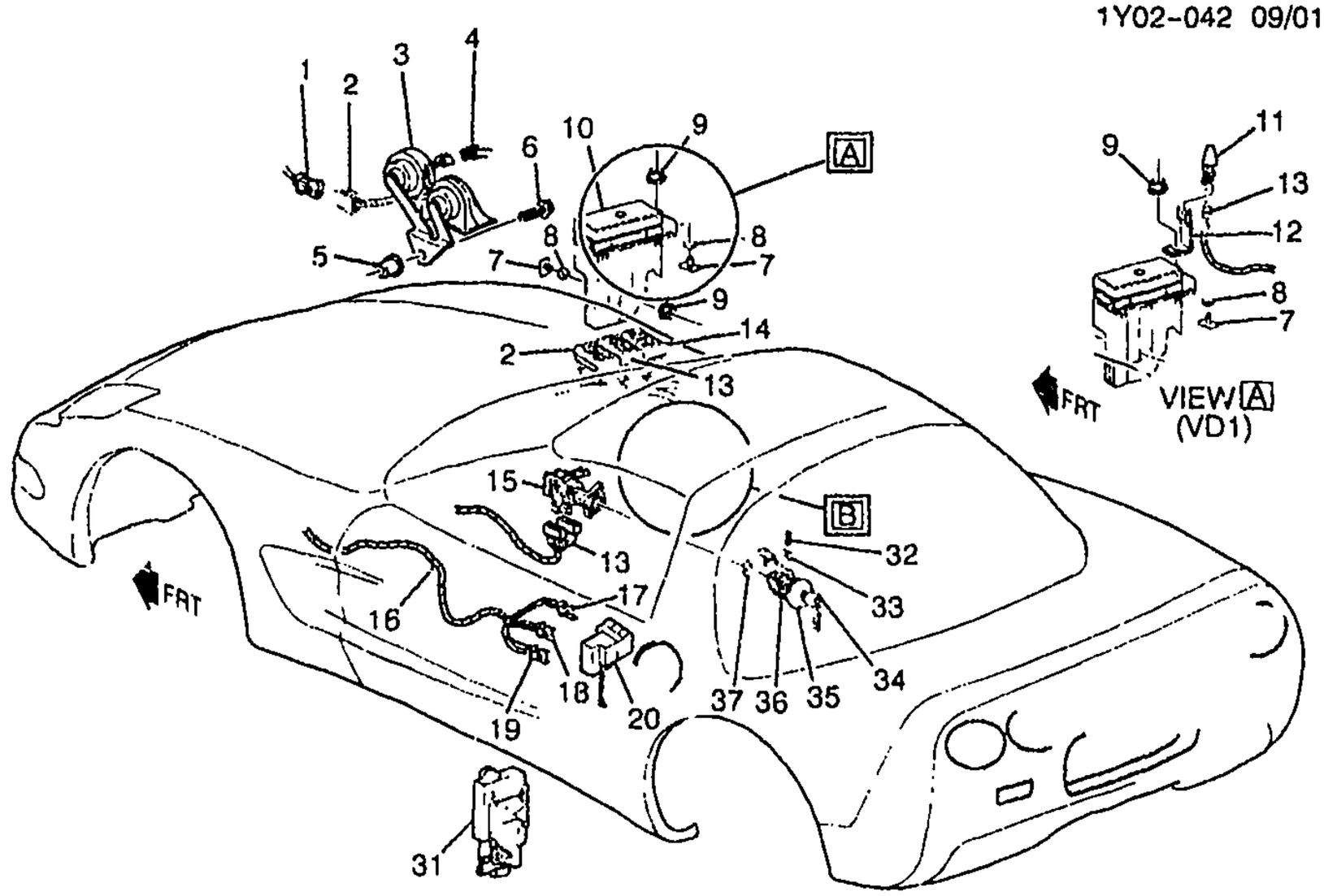

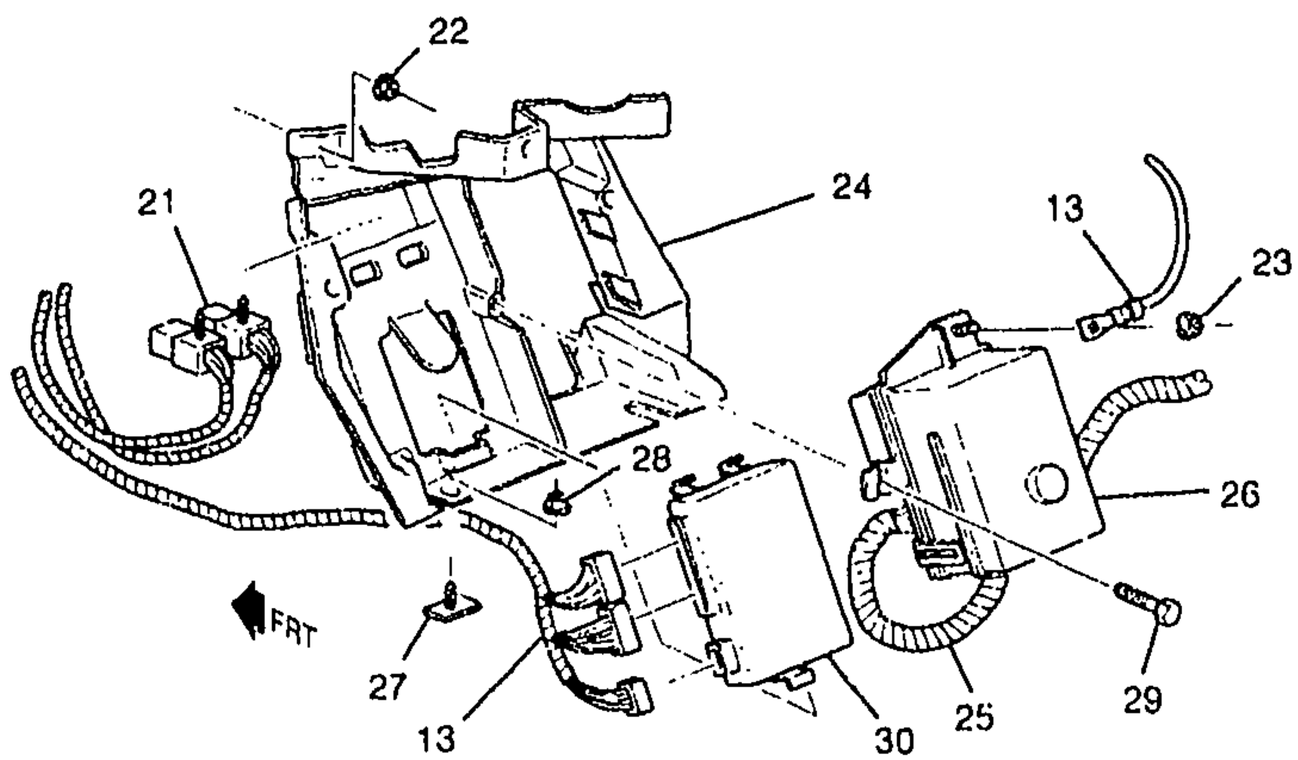

YV

1Y02-042

1997-2002 Y ALARM SYSTEM/ANTI THEFT

1.	2-A18	2.480	HARNESS, FWD LP WRG HARN EXTN	97-99	Y (EXC T90)	1	12163711
	2-A18	2.480	HARNESS, FWD LP WRG HARN EXTN	00-02	Y (EXC T90)	1	15329462
	2-A18	2.480	HARNESS, FWD LP WRG HARN EXTN	97	Y07 (T90) (EXPORT) ...	1	15329463

cardiagn.com

							1Y02-042
	2-A18	2.480	HARNESS, FWD LP WRG HARN EXTN	98-02	Y07-67 (T90) (EXPORT)	1	15329463
2.	2-A18	2.480	HARNESS, FWD LP WRG	97	Y (T96) (EXC T90)	1	12189881
	2-A18	2.480	HARNESS, FWD LP WRG	97	Y (EXC T96)	1	12189883
	2-A18	2.480	HARNESS, FWD LP WRG	98	Y (T96) (EXC JAG, T90)	1	12163322
	2-A18	2.480	HARNESS, FWD LP WRG	98	Y (EXC JAG, T96)	1	12163324
	2-A18	2.480	HARNESS, FWD LP WRG	98	Y (JAG, T96) (EXC JL4, T90)	1	12189515
	2-A18	2.480	HARNESS, FWD LP WRG	98	Y (JAG) (EXC JL4, T96)	1	12189517
	2-A18	2.480	HARNESS, FWD LP WRG	98	Y (JAG, JL4, T96) (EXC T90)	1	12189518
	2-A18	2.480	HARNESS, FWD LP WRG	98	Y (JAG, JL4) (EXC T96)	1	12189520
	2-A18	2.480	HARNESS, FWD LP WRG	99	Y07-67 (T96) (EXC JL4, T90)	1	12189973
	2-A18	2.480	HARNESS, FWD LP WRG	99	Y07-67 (EXC JL4, T90, T96)	1	12189974
	2-A18	2.480	HARNESS, FWD LP WRG	99	Y (JL4, T96) (EXC T90) .	1	12189976
	2-A18	2.480	HARNESS, FWD LP WRG	99	Y07-67 (JL4) (EXC T90, T96)	1	12189978
	2-A18	2.480	HARNESS, FWD LP WRG	99	Y37 (T96) (EXC JL4) ...	1	12189973
	2-A18	2.480	HARNESS, FWD LP WRG	99	Y37 (NV7) (EXC JL4, T96)	1	12189974
	2-A18	2.480	HARNESS, FWD LP WRG	00	Y07-67 (EXC JL4, T90)	1	15329403
	2-A18	2.480	HARNESS, FWD LP WRG	00	Y (JL4) (EXC T90)	1	15329406
	2-A18	2.480	HARNESS, FWD LP WRG	00	Y37 (EXC JL4)	1	15329403
	2-A18	2.480	HARNESS, FWD LP WRG (2ND DSN USED ON/AFTER VIN #15107689, (1ST DSN 10448116))	01	YY07-67 (JL4) (EXC T90) (2ND DES)	1	10310796
	2-A18	2.480	HARNESS, FWD LP WRG (2ND DSN USED ON/AFTER VIN #15107689, (1ST DSN 10448118))	01	YY07-67 (JL4, T90) (2ND DES)	1	10310798
	2-A18	2.480	HARNESS, FWD LP WRG (1ST DSN USED B/4 VIN #15107689, (2ND DSN 10310796))	01	YY07-67 (JL4) (EXC T90) (1ST DES)	1	10448116
	2-A18	2.480	HARNESS, FWD LP WRG (1ST DSN USED B/4 VIN #15107689, (2ND DSN 10310798))	01	YY07-67 (JL4, T90) (1ST DES)	1	10448118
	2-A18	2.480	HARNESS, FWD LP WRG	01-02	YY37	1	10310796
	2-A18	2.480	HARNESS, FWD LP WRG	01	YY37	1	10448116
	2-A18	2.480	HARNESS, FWD LP WRG	02	YY07-67 (EXC T90) ...	1	10310796
	2-B15	2.530	CONNECTOR, INLINE-TO FWD LP HARN (BLACK) (2-WAY F W/LEADS) (3.670) (AC-DELCO #PT374)	97-98	Y	1	12102747
	2-B15	2.530	CONNECTOR, INLINE-TO FWD LP HARN (WHITE) (8-WAY F W/LEADS) (2.535) (AC-DELCO #PT444)	97-02	Y (EXC T90)	1	12117271
	2-B15	2.530	CONNECTOR, INLINE-TO FWD LP HARN (BLACK) (10-WAY F) (W/LEADS) (AC-DELCO #PT588)	98-02	Y	1	12125676
	2-B15	2.530	CONNECTOR, INLINE-TO FWD LP HARN (20-WAY F) (W/O LEADS)	98-00	Y	1	12160280

cardiagn.com

							1Y02-042
	2-B15	2.530	CONNECTOR, INLINE-TO FWD LP HARN (BLACK) (2-WAY F W/LEADS) (3.670) (AC-DELCO #PT374)	99-00	Y07-67	1	12102747
	2-B15	2.530	CONNECTOR, INLINE-TO FWD LP HARN (BLACK) (2-WAY F W/LEADS) (3.670) (AC-DELCO #PT374)	99-00	Y37 (TR9)	1	12102747
	2-B15	2.530	CONNECTOR, INLINE-TO FWD LP HARN (1-WAY M) (W/LEAD) (BLACK) (AC-DELCO #PT1223)	00	Y	1	12085669
	2-B15	2.530	CONNECTOR, INLINE-TO FWD LP HARN (BLACK) (2-WAY F W/LEADS) (2.383) (AC-DELCO #PT169)	01-02	Y	1	12101899
	2-B15	2.530	CONNECTOR, INLINE-TO FWD LP HARN (BLACK) (2-WAY F W/LEADS) (3.670) (AC-DELCO #PT374)	01-02	Y	1	12102747
	2-B15	2.530	CONNECTOR, INLINE-TO FWD LP HARN (10-WAY F) (13.100) ..	01-02	Y	1	15326842
	2-B15	2.530	CONNECTOR, INLINE-TO FWD LP HARN (10-WAY M) (2.483) ...	01-02	Y	1	15326847
	2-B15	2.530	CONNECTOR, INLINE-TO FWD LP HARN	01-02	YY67 (M30, CJ2, N37) (EXC T89)	1	15326286
	2-B15	2.530	CONNECTOR, INLINE-TO FWD LP HARN (BLACK) (2-WAY F W/LEADS) (2.383) (AC-DELCO #PT169)	02	Y (MM6, M30)	1	12101899
	2-B15	2.530	CONNECTOR, INLINE-TO FWD LP HARN (BLACK) (2-WAY F W/LEADS) (2.383) (AC-DELCO #PT169)	02	YY37	1	12101899
	2-B15	2.530	CONNECTOR, INLINE--TO FWD LP HARN (16-WAY FEMALE GT-150.) (16 WAY FEMALE) (AC-DELCO #PT1463)	01-02	YY67	1	15306410
	2-A18	2.480	HARNESS, FWD LP WRG	97	Y (VD1) (EXPORT)	1	12189883
	2-A18	2.480	HARNESS, FWD LP WRG	97	Y (T90, VE1) (EXPORT)	1	12189884
	2-A18	2.480	HARNESS, FWD LP WRG	99	Y07-67 (T90) (EXC JL4) (EXPORT)	1	12189975
	2-A18	2.480	HARNESS, FWD LP WRG	99	Y07-67 (JL4, T90) (EXPORT)	1	12189978
	2-A18	2.480	HARNESS, FWD LP WRG	00	Y07-67 (T90) (EXC JL4) (EXPORT)	1	15329405
	2-A18	2.480	HARNESS, FWD LP WRG	00	Y07-67 (JL4, T90) (EXPORT)	1	15329408
	2-A18	2.480	HARNESS, FWD LP WRG	02	YY07-67 (T90) (EXPORT)	1	10310798
	2-B15	2.530	CONNECTOR, INLINE-TO FWD LP HARN (WHITE) (8-WAY F W/LEADS) (2.535) (AC-DELCO #PT444)	02	YY07-67 (T90) (EXPORT)	1	12117271
3.	2-C5	2.810	HORN KIT, GENERIC (HIGH NOTE) (BRKT KIT INCLUDED) (AC--DELCO #D1921C)	97-02	Y	1	12368061

cardiagn.com

	2-C5	2.810	HORN KIT, GENERIC (LOW NOTE) (BRKT KIT INCLUDED) (AC-DELCO #D1920C)	97-02	Y	1	12368062
4.	2-C5	2.815	CONNECTOR, HORN (GREY, (2-WAY F W/LEADS) (4.710) (AC-DELCO #PT1357)	97-02	Y	1	15306302
5.	2-C5	2.812	NUT, HORN (3.015)	97-02	Y	1	10281493
6.		N.S.	BOLT, HORN (INTEGRAL BOLT-PART OF HORN)		.....		
7.	2-B10	2.483	STUD, ENG WRG HARN J/BLK (M6 X 1 X 24) (1.271)	97-02	Y	2	10135646
8.		8.921	NUT, PUSH-ON, M6X1, SPR STL, STYLE 1, POR (ENG WRG HARN RLY BLK RET)	97-02	.....	2	14093869
9.		8.917	NUT, HEX W/CON W/A 6X1X5.5 16-OD ZP 9 (ENG WRG HARN J/BLK BRKT)	97-02	.....	2	11517293
10.	2-B10	2.483	BLOCK, ENG WRG HARN JUNC .	97	Y (EXC T90)	1	15319558
	2-B10	2.483	BLOCK, ENG WRG HARN JUNC .	98	Y (EXC F45, JAG, T90) .	1	12161089
	2-B10	2.483	BLOCK, ENG WRG HARN JUNC .	98	Y (JAG)	1	15329393
	2-B10	2.483	BLOCK, ENG WRG HARN JUNC .	99	Y	1	15329393
	2-B10	2.483	BLOCK, ENG WRG HARN JUNC (NOTE: DOES NOT INCL. COVER ASM-BAT 15328644)	00-02	Y	1	10443149
	2-B10	2.483	BLOCK, ENG WRG HARN JUNC .	97	Y (T90) (EXPORT)	1	12161089
11.		N.S.	SWITCH, HOOD AJAR IND LP ...		.....		
12.	2-N18	8.077	BRACKET, HOOD AJAR IND LP SW	97-02	Y (VD1) (EXPORT)	1	10285408
13.		N.S.	HARNESS, I/P WRG (SEE GROUP 10 FOR DETAILED ILLUSTRATED VIEW)		.....		
	2-A10	2.195	RELAY, THEFT DTRNT (STARTER ENABLE) (BLACK) (5-WAY M) (USED W/CONNECTOR 15306045) (W/OUT BRKTS) (9.277) (AC-DELCO #15-8719)	97-99	Y	1	12193601
	2-A10	2.195	RELAY, STRTR THEFT DTRNT (5-TERMINAL) (9.277) (AC-DELCO #15-8721)	98-00	Y	1	12177233
	2-N18	8.077	CONNECTOR, SW-HOOD AJAR IND (BLACK) (2-WAY F W/LEADS) (3.670) (AC-DELCO #PT374)	97-02	Y	1	12102747
	2-A10	2.195	RETAINER, THEFT DTRNT RLY (1.055)	97-98	Y07	1	12129271
	2-A10	2.195	RETAINER, THEFT DTRNT RLY (1.055)	99	Y	1	12129271
	2-A9	2.188	CONNECTOR, SW-IGN & START (BLACK) (3-WAY F W/LEADS) (2.535) (AC-DELCO #PT256)	97-02	Y	1	12101864
	2-A9	2.188	CONNECTOR, SW-IGN & START (6-WAY FEMALE M/P 280. 630 (W/LEADS)) (NATURAL) (6-WAY F W/LEADS) (AC-DELCO #PT820)	98-02	Y	1	12167166

cardiagn.com

	2-A9	2.188	CONNECTOR, SW-IGN & START (6-WAY FEMALE 280, 630. (W/O LEADS) .) (BLACK) (6-WAY F W/O LEADS)	97-02	Y	1	12162229
	2-B24	2.560	CONNECTOR, MDL-BODY CONT (PINK) (24-WAY F W/O LEADS) (2.480)	97-02	Y	1	12110244
	2-B24	2.560	CONNECTOR, MDL-BODY CONT (PINK) (32-WAY F) (2.480)	97-02	Y	1	12110245
	2-B24	2.560	CONNECTOR, MDL-BODY CONT (PINK) (24-WAY F W/O LEADS) (2.480)	02	YY67 (M30, CJ2, N37) (EXC T89)	1	12110244
	2-B24	2.560	CONNECTOR, MDL-BODY CONT (PINK) (32-WAY F) (2.480)	02	YY67 (M30, CJ2, N37) (EXC T89)	1	12110245
	2-B24	2.560	CONNECTOR, MDL-BODY CONT (GREEN) (16-WAY F W/O LEADS) (2.195)	02	YY67 (M30, CJ2, N37) (EXC T89)	1	12110269
	2-B24	2.560	CONNECTOR, MDL-BODY CONT (TYPICALLY USES 20-22GA FEMALE TERM 12089660) (GREEN) (16-WAY F W/O LEADS) (2.195)	97-02	Y	1	12110269
	2-A8	2.100	CONNECTOR, RLY-START MOT THEFT DTRNT (BLACK) (6-WAY F) (W/O LEADS) (3.900)	97-02	Y	1	12110541
	2-A8	2.100	CONNECTOR, RLY-START MOT THEFT DTRNT (BLACK) (6-WAY F) (W/O LEADS) (3.900)	02	YY67	1	12110541
	2-A10	2.195	CONNECTOR, RLY-STRG WHL THEFT DTRNT LK (BLACK) (6--WAY F) (W/O LEADS) (3.900)	98-99	Y	1	12110541
14.	2-B14	2.525	HARNESS, ENG WRG	97	Y (M30)	1	12163328
	2-B14	2.525	HARNESS, ENG WRG	97	Y (MM6)	1	12163330
	2-B14	2.525	HARNESS, ENG WRG	98	Y (M30) (EXC JAG)	1	12163328
	2-B14	2.525	HARNESS, ENG WRG	98	Y (MM6) (EXC JAG, VD1)	1	12163330
	2-B14	2.525	HARNESS, ENG WRG	98	Y (M30, JAG)	1	12163794
	2-B14	2.525	HARNESS, ENG WRG	98	Y (MM6, JAG) (EXC VD1)	1	12163795
	2-B14	2.525	HARNESS, ENG WRG	99-00	Y (MM6) (EXC VD1) ...	1	12189523
	2-B14	2.525	HARNESS, ENG WRG	99-00	Y (M30)	1	12189524
	2-B14	2.525	HARNESS, ENG WRG	01-02	Y (M30)	1	15329389
	2-B14	2.525	HARNESS, ENG WRG	01-02	Y (MM6)	1	15329391
	2-B14	2.525	HARNESS, ENG WRG	01-02	Y37 (LS6, M12)	1	15329391
	2-B14	2.525	HARNESS, ENG WRG	02	YY37	1	15329391
	2-B14	2.525	HARNESS, ENG WRG	98	Y (MM6, JAG, VD1) (EXPORT)	1	12189910
	2-B14	2.525	HARNESS, ENG WRG (ENHANCE EVAP EMISS)	99-00	Y (MM6, VD1) (EXPORT)	1	12189911
15.	2-A9	2.188	SWITCH, IGN & START (AC-DELCO #D1499C)	97-02	Y	1	10246848
16.	2-N24	13.090	HARNESS, DR LK & O/S RRVIEW MIR MEMORY INTERFACE MDL WRG	97-00	Y	LH	12163314
	2-N24	13.090	HARNESS, DR LK & O/S RRVIEW MIR MEMORY INTERFACE MDL WRG	97-99	Y	RH	12163315

cardiagn.com

						TY02-042	
	2-N24	13.090	HARNESS, DR LK & O/S RRVIEW MIR MEMORY INTERFACE MDL WRG	00-02	Y (T93)	RH	12163315
	2-N24	13.090	HARNESS, DR LK & O/S RRVIEW MIR MEMORY INTERFACE MDL WRG	01-02	Y (DL8)	LH	12163314
	2-N24	13.090	HARNESS, DR LK & O/S RRVIEW MIR MEMORY INTERFACE MDL WRG	01-02	Y (DD0)	LH	12189556
17.	2-N22	10.485	CONNECTOR, SW-DR LK (GREEN) (2-WAY F, W/LEADS) (2.535) (AC-DELCO #PT248) ...	97-02	Y	2	12101856
18.	2-N26	13.100	CONNECTOR, SW-DR AJAR IND (4-WAY F) (W/LEADS) (2.383) (AC-DELCO #PT757) ...	97-02	Y	1	12126487
19.	2-N26	13.100	CONNECTOR, INLINE-TO DR LK ACTR MOT (2-WAY F) (W/LEADS) (W/SEAL) (2.535) (AC-DELCO #PT247)	97-02	Y	2	12101855
20.		N.S.	ACTUATOR, FRT S/D LK (SEE GROUP 10 "DOOR HARDWARE" FOR DETAILED ILLUSTRATED VIEW)		.....		
21.	2-A10	2.195	RELAY, THEFT DTRNT (STARTER ENABLE) (BLACK) (5-WAY M) (USED W/CONNECTOR 15306045) (W/OUT BRKTS) (9.277) (AC-DELCO #15-8719)	97-99	Y	1	12193601
	2-A10	2.195	RELAY, STRTR THEFT DTRNT (5-TERMINAL) (9.277) (AC-DELCO #15-8721)	98-00	Y	1	12177233
22.		8.917	NUT, HEX W/CON WA 6X1X5.5 16-OD ZP 9 (MULTIUSE RLY & FUSE BRKT) (POSN #2)	97-02	.....	3	11517293
23.		8.917	NUT, HFH, M8X1.25, 17.9 OD, 738 THK, 13MM HEX, 10, ZF (I/P WRG HARN J/BLK) (8.916) (AC-DELCO #11514596)	97-02	.....	1	11514596
24.	2-B10	2.483	BRACKET, MULTIUSE RLY & FUSE	97-00	Y	1	10417445
	2-B10	2.483	BRACKET, MULTIUSE RLY & FUSE (2ND DSN USES VELCRO FASTENERS TO ATTACH BRACKET. 1ST DSN SEE P/N 10417445.)	01	Y (2ND DES)	1	10317346
	2-B10	2.483	BRACKET, MULTIUSE RLY & FUSE (1ST DSN USES RUBBER CAM LOCK FASTENERS TO ATTACH BRACKET. 2ND DSN SEE P/N 10317346)	01	Y (1ST DES)	1	10417445
	2-B10	2.483	BRACKET, MULTIUSE RLY & FUSE	02	Y	1	10317346
	2-B10	2.483	BRACKET, MULTIUSE RLY & FUSE	02	Y	1	10417445
25.	2-N24	13.090	HARNESS, BODY FRT WRG	97-98	Y07	1	12189550
	2-N24	13.090	HARNESS, BODY FRT WRG ..	98	Y07 (UZ6)	1	12189558
	2-N24	13.090	HARNESS, BODY FRT WRG	99-00	Y07 (EXC U1S)	1	12189597
	2-N24	13.090	HARNESS, BODY FRT WRG ...	99-00	Y07 (U1S)	1	12189599

cardiagn.com

	2-N24	13.090	HARNESS, BODY FRT WRG ...	99-00	Y37 (U1S)	1	12163772
	2-N24	13.090	HARNESS, BODY FRT WRG	99-00	Y37 (EXC U1S)	1	12189595
	2-N24	13.090	HARNESS, BODY FRT WRG	99-00	Y67 (EXC U1S)	1	12189599
	2-N24	13.090	HARNESS, BODY FRT WRG	99-00	Y67 (U1S)	1	12189962
	2-N24	13.090	HARNESS, BODY FRT WRG	01-02	YY07 (UZ6) (EXC U1S) .	1	15329382
	2-N24	13.090	HARNESS, BODY FRT WRG	01-02	YY07 (UZ6, U1S)	1	15329383
	2-N24	13.090	HARNESS, BODY FRT WRG	01-02	YY37	1	15329378
	2-N24	13.090	HARNESS, BODY FRT WRG ...	01-02	YY67 (UZ6) (EXC U1S) .	1	15329386
	2-N24	13.090	HARNESS, BODY FRT WRG	01-02	YY67 (UZ6, U1S)	1	15329387
26.	2-B10	2.483	BLOCK, I/P WRG HARN JUNC ..	97-98	Y	1	12193838
	2-B10	2.483	BLOCK, I/P WRG HARN JUNC ..	99-02	Y	1	10443148
	2-B10	2.483	CONNECTOR, BLK-I/P WRG JUNC (BLACK) (68-WAY F, M/P 280 FLXLK, W/O LEADS) (2.530) .	97-00	Y	1	12177206
	2-B10	2.483	CONNECTOR, BLK-I/P WRG JUNC (GRAY) (68-WAY F, M/P 280 FLXLK, W/O LEADS) (2.530) .	97-00	Y	1	12177207
	2-B10	2.483	CONNECTOR, BLK-I/P WRG JUNC (GRAY) (2-WAY F MAXI FUSE CONN W/LEADS) (2.530) (AC-DELCO #PT1028)	99-00	Y	1	15306886
	2-B10	2.483	CONNECTOR, BLK-I/P WRG JUNC (GREEN) (2-WAY F W/LEADS) (2.530) (AC-DELCO #PT1169)	99-00	Y	1	15306920
	2-B10	2.483	CONNECTOR, BLK-I/P WRG JUNC (2-WAY F MAXI FUSE W/LEADS) (2.530) (AC-DELCO #PT1190)	99-00	Y	1	15306951
	2-B10	2.483	CONNECTOR, BLK-I/P WRG JUNC (68-WAY F, M/P 280 FLXLK, W/O LEADS, GRAY) (2.530)	00	Y	1	12177205
	2-B10	2.483	CONNECTOR, BLK-I/P WRG JUNC (BLACK) (2-WAY F, MAXI FUSE, W/LEADS) (2.530) (AC-DELCO #PT1187)	00-02	Y	1	15306928
27.	2-B10	2.483	PLATE, MULTIUSE RLY BRKT STUD (M6 X 1 X 24) (1.271)	97	Y	2	10135646
	2-B10	2.483	PLATE, MULTIUSE RLY BRKT STUD (BRACKET REPLACES CENTER-MOST OF THE THREE SIMILAR BRACKETS ON THE PASSENGER SIDE OF DASHBOARD & BOTH BRACKETS ON DRIVER SIDE OF DASHBOARD) (3.162)	97	Y	1	10402723
	2-B10	2.483	PLATE, MULTIUSE RLY BRKT STUD (BRACKET REPLACES THE TWO OUTBOARD OF THE THREE SIMILAR BRACKETS ON THE PASSENGER SIDE OF DASHBOARD) (12.986)	97	Y	1	14058668
	2-B10	2.483	STUD, MULTIUSE RLY BRKT (ANC PLT) (M6 X 1 X 24) (1.271) .	98-02	Y	2	10135646
28.		8.917	NUT, HEX W/CON WA, 24 OD, M6X1X5.6, 9M, PZOR (MULTIUSE RLY & FUSE BRKT) (POSN #1) ..	97-02	. .. .	2	11514275

cardiagn.com

29.		8.977	BOLT, HEX W/12.5 OD WA, M4.2X1.41X16 DBL LD HI-LO 6010M (I/P WRG HARN FUSE BLK)	97-02		1	11515312
30.	2-B24	2.560	MODULE, BODY CONT (AC-DELCO #9381389)	97	Y	1	9381389
	2-B24	2.560	MODULE, BODY CONT (AC-DELCO #9381929)	98	Y	1	9381929
	2-B24	2.560	MODULE, BODY CONT (AC-DELCO #9381399)	99	Y	1	9381399
	2-N22	10.485	MODULE, BODY CONT (2.560) (AC-DELCO #9381399)	99	Y	1	9381399
	2-B24	2.560	MODULE, BODY CONT (AC-DELCO #10304930)	00	Y	1	10304930
	2-N22	10.485	MODULE, BODY CONT (2.560) (AC-DELCO #10304930)	00	Y	1	10304930
	2-B24	2.560	MODULE, BODY CONT (AC-DELCO #10304931)	01-02	Y	1	10304931
	2-N22	10.485	MODULE, BODY CONT (2.560) (AC-DELCO #10304931)	01-02	Y	1	10304931
31.	2-N22	10.470	LOCK, FRT S/D (INCLS THEFT DET SWITCH & ACTUATOR)	97-99	Y	RH	16636582
	2-N22	10.470	LOCK, FRT S/D	97-02	Y	LH	16640976
	2-N22	10.470	LOCK, FRT S/D	00-02	Y (EXC BCC)	RH	16639572
	2-N22	10.470	LOCK, FRT S/D (INCLS THEFT DET SWITCH & ACTUATOR)	00-02	Y (BCC) (EXPORT)	RH	16636582
32.	2-A9	2.188	SPRING, IGN LK CYL TUMB	97-02	Y	9	26050539
33.	2-A9	2.188	TUMBLER, IGN LK CYL (TUMBLER #1)	97-02	Y	AR	2852732
	2-A9	2.188	TUMBLER, IGN LK CYL (TUMBLER #2)	97-02	Y	AR	2852733
	2-A9	2.188	TUMBLER, IGN LK CYL (TUMBLER #3)	97-02	Y	AR	2852734
	2-A9	2.188	TUMBLER, IGN LK CYL (TUMBLER #4)	97-02	Y	AR	2852735
34.	2-A9	2.187	KEY, DR LK & IGN LK (UNCODED) (RESISTOR CODE #10)	97-02	Y	1	2852564
	2-A9	2.187	KEY, DR LK & IGN LK (UNCODED) (RESISTOR CODE #11)	97-02	Y	1	2852565
	2-A9	2.187	KEY, DR LK & IGN LK (UNCODED) (RESISTOR CODE #12)	97-02	Y	1	2852566
	2-A9	2.187	KEY, DR LK & IGN LK (UNCODED) (RESISTOR CODE #13)	97-02	Y	1	2852567
	2-A9	2.187	KEY, DR LK & IGN LK (UNCODED) (RESISTOR CODE #14)	97-02	Y	1	2852568
	2-A9	2.187	KEY, DR LK & IGN LK (UNCODED) (RESISTOR CODE #15)	97-02	Y	1	2852569
	2-A9	2.187	KEY, DR LK & IGN LK (UNCODED) (RESISTOR CODE #2)	97-02	Y	1	2852556

cardiagn.com

	2–A9	2.187	KEY, DR LK & IGN LK (UNCODED) (RESISTOR CODE #3)	97–02	Y	1	2852557
	2–A9	2.187	KEY, DR LK & IGN LK (UNCODED) (RESISTOR CODE #4)	97–02	Y	1	2852558
	2–A9	2.187	KEY, DR LK & IGN LK (UNCODED) (RESISTOR CODE #5)	97–02	Y	1	2852559
	2–A9	2.187	KEY, DR LK & IGN LK (UNCODED) (RESISTOR CODE #6)	97–02	Y	1	2852560
	2–A9	2.187	KEY, DR LK & IGN LK (UNCODED) (RESISTOR CODE #7)	97–02	Y	1	2852561
	2–A9	2.187	KEY, DR LK & IGN LK (UNCODED) (RESISTOR CODE #8)	97–02	Y	1	2852562
	2–A9	2.187	KEY, DR LK & IGN LK (UNCODED) (RESISTOR CODE #9)	97–02	Y	1	2852563
35.	2–A10	2.188	BEZEL, IGN LK CYL	97–02	Y	1	2852046
36.	2–A9	2.188	CYLINDER KIT, IGN LK (UNCODED) (AC–DELCO #D1473D)	97–02	Y	1	12458190
37.	2–A9	2.188	RETAINER, IGN LK CYL TUMB SPR	97–02	Y	1	26047315

RPO DEFINITIONS
BCC – CYLINDER UNIT PASSENGER DR(EXPORT)
CJ2 -- HVAC SYSTEM AIR CONDITIONER FRT, AUTO TEMP CONT, AUX TEMP CONT
DD0 – MIRROR,O/S,R AND L REM CTL,ELEC,DEFOG,LT SENSITIVE
DL8 -- MIRROR,OUTSIDE,RH AND LH REMOTE CONTROL,ELECTRIC,DEFOG
F45 -- CHASSIS CONTINUOUS VALVE REAL TIME DAMPING
JAG – BRAKE PROVISIONS ABS LOCATION
JL4 - CONTROL ACTIVE BRAKE
LS6 – ENGINE GAS, 8 CYL, 5.7L, SFI, ALUMINUM, HIGH OUTPUT
MM6 – TRANSMISSION MAN 6 SPD, BORG WARNER, 85MM, 1ST 2.66, 6TH 0.50, O/D
M12 – TRANSMISSION MAN 6 SPD, TREMEC, 85MM, 1ST 2.97, 6TH 0.57, O/D
M30 – TRANSMISSION,AUTOMATIC 4 SPEED,4L60E,ELECTRONIC
NV7 – STEERING,POWER,VARIABLE EFFORT
N37 – STEERING COLUMN,TILT AND TELESCOPING
TR9 – LAMP GROUP,COURTESY
T89 – LAMP,TAIL AND STOP(EXPORT)
T90 – LAMP,SIGNALING AND MARKER(EXPORT)
T93 - LAMP,TAIL AND STOP(SPECIAL)
T96 – LAMP,FRONT FOG
UZ6 – SPEAKER SYSTEM 6, QUAD FRT DR MTD, DUAL QTR MTD
U1S – PLAYER MULTIPLE COMPACT DISC
VD1 – PROVISION OPTIONS,EUROPE(EXPORT)
VE1 - PROVISION OPTIONS,JAPAN(EXPORT)

cardiagn.com

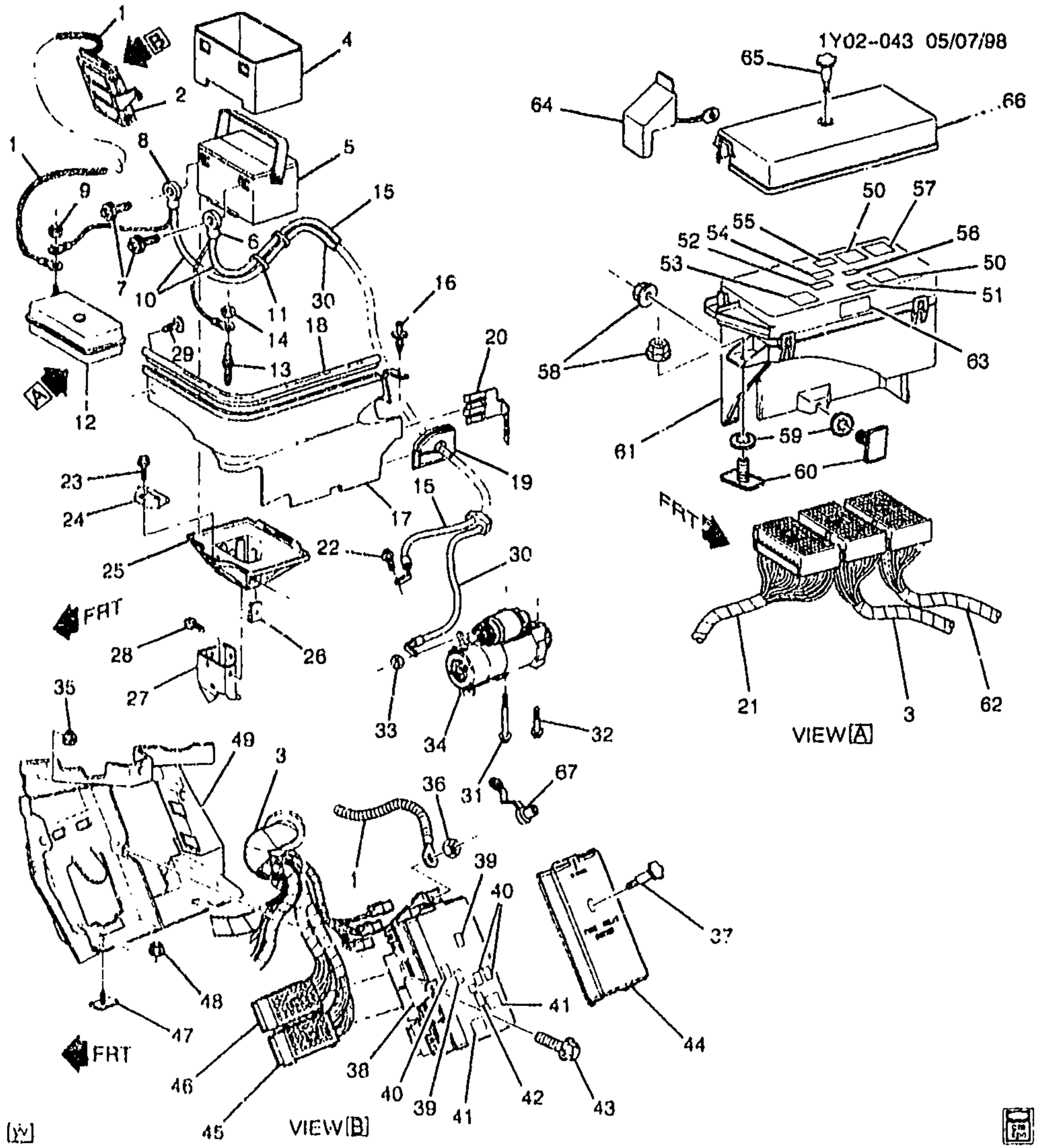

1Y02-043

1997-2000 Y BATTERY CABLES & RELATED PARTS

1.	2-A18	2.342	CABLE, BAT POS FUSE BLK (AC-DELCO #6CX40)	97-00	Y	1	12157091
2.	2-B10	2.483	BLOCK, I/P WRG HARN JUNC (INCLS 38, 39, 42, 44)	97-98	Y	1	12193838

cardiagn.com

							1Y02-043
	2-B10	2.483	BLOCK, I/P WRG HARN JUNC (INCLS 38, 39, 42, 44)	99-00	Y	1	10443148
	2-B10	2.483	LABEL, FUSE BLK IDENT	97	Y	1	12176907
	2-B10	2.483	LABEL, FUSE BLK IDENT	98	Y	1	12194083
	2-B10	2.483	LABEL, FUSE BLK IDENT	99-00	Y	1	15319414
		8.965	BREAKER, FUSE BLOCK CIRC, 20 AMP (YELLOW) (16MM BETWEEN TERM) (CYCLING)	97-00		1	12065132
		8.965	BREAKER, CIRCUIT, 20 AMP, YELLOW (NON-CYCLING)	97-00		2	12077861
		8.965	FUSE, MAXI, 30 AMP (LT GREEN) ()	97-00		1	12065932
		8.965	FUSE, MAXI, 40 AMP (AMBER) ()	97-00		1	12065933
		8.965	FUSE, MAXI, 60 AMP (BLUE) ()	97-00		1	12065935
		8.965	FUSE, MINI, 25 AMP (CLEAR) ()	97-00		1	12092076
		8.965	FUSE, MINI, 20 AMP (YELLOW) ()	97-00		1	12092077
		8.965	FUSE, MINI, 15 AMP (BLUE) ()	97-00		1	12092078
		8.965	(AC-DELCO #ATM10-25)	97-00		1	88909753
	2-B10	2.483	CONNECTOR, BLK-I/P WRG JUNC (BLACK) (68-WAY F, M/P 280 FLXLK, W/O LEADS) (2.530)	97-00	Y	1	12177206
	2-B10	2.483	CONNECTOR, BLK-I/P WRG JUNC (GRAY) (68-WAY F, M/P 280 FLXLK, W/O LEADS) (2.530)	97-00	Y	1	12177207
	2-B10	2.483	CONNECTOR, BLK-I/P WRG JUNC (GRAY) (2-WAY F MAXI FUSE CONN W/LEADS) (2.530) (AC-DELCO #PT1028)	99-00	Y	1	15305886
	2-B10	2.483	CONNECTOR, BLK-I/P WRG JUNC (GREEN) (2-WAY F W/LEADS) (2.530) (AC-DELCO #PT1169)	99-00	Y	1	15305920
	2-B10	2.483	CONNECTOR, BLK-I/P WRG JUNC (2-WAY F MAXI FUSE W/LEADS) (2.530) (AC-DELCO #PT1190)	99-00	Y	1	15305951
	2-B10	2.483	CONNECTOR, BLK-I/P WRG JUNC (68-WAY F, M/P 280 FLXLK, W/O LEADS, GRAY) (2.530)	00	Y	1	12177205
	2-B10	2.483	CONNECTOR, BLK-I/P WRG JUNC (BLACK) (2-WAY F, MAXI FUSE, W/LEADS) (2.530) (AC-DELCO #PT1187)	00	Y	1	15305928
3.	2-A18	2.480	HARNESS, I/P WRG (SEE GROUP 10 FOR DETAILED ILLUSTRATED VIEW)				
	2-B15	2.530	CONNECTOR, PWR DISTR BLK (GRAY) (2-WAY F MAXI FUSE CONN W/LEADS) (AC-DELCO #PT1028)	97-98	Y	1	15305886
	2-B15	2.530	CONNECTOR, PWR DISTR BLK (GREEN) (2-WAY F W/LEADS) (AC-DELCO #PT1169)	97-00	Y	1	15305920
	2-B15	2.530	CONNECTOR, PWR DISTR BLK (BROWN) (68-WAY F, M/P 280 FLYLK, W/O LEADS)	97-98	Y	1	15303514
4.	2-A15	2.333	INSULATOR BAT	97-00	Y	1	10246636

cardiagn.com

							1/02-043
5.		N.S.	BATTERY, ...		.....		
6.	2-A15	2.343	COVER, BAT NEG CBL TERM (PART OF 10) (BLACK VINYL) (SURROUNDS CABLE END AT BATT)	97-00	Y	1	12160209
7.		8.900	BOLT, HEX HD, 3/8-16X13/32, 1/4 THD, 1 5/32 TL, 51/64 OD, STL, ZP (BATT CBL TERM) (PART OF 10)	97-00	.....	2	8917444
8.	2-A15	2.343	COVER, BAT POS CBL TERM (PART OF 10) (RED VINYL) (SURROUNDS CABLE END AT BATT)	97-00	Y	1	12160210
9.		8.917	NUT, HFH, M8X1.25, 17.9 OD, 738 THK, 13MM HEX, 10, ZF (BATT POS CBL) (POSN #2) (8.915) (AC-DELCO #11514536)	97-00	.....	1	11514596
10.		N.S.	CABLE, BAT POS & NEG (CPS) (INCLS 6-8, 11, 15, 30)		.....		
		8.965	CONDUIT, ELECTRICAL (15 FT X .350 ID) (BAT CBL)	97-00	.....	AR	8919354
		8.965	CONDUIT, 10MM X 15 FEET (BLA/GRA NYLON) (BAT CBL) ...	97-00	.....	AR	12125347
11.	2-A15	2.343	CLIP, BAT CBL (PART OF 10)	97-00	Y	3	12124798
12.	2-B10	2.483	BLOCK, ENG WRG HARN JUNC (CPS) (INCLS 50-57, 61, 63-66)	97	Y (EXC T90)	1	15319558
	2-B10	2.483	BLOCK, ENG WRG HARN JUNC (CPS) (INCLS 50-57, 61, 63-66)	98	Y (EXC F45, JAG, T90) .	1	12161089
	2-B10	2.483	BLOCK, ENG WRG HARN JUNC (CPS) (INCLS 50-57, 61, 63-66)	98	Y (JAG)	1	15329393
	2-B10	2.483	BLOCK, ENG WRG HARN JUNC (CPS) (INCLS 50-57, 61, 63-66)	99	Y	1	15329393
	2-B10	2.483	BLOCK, ENG WRG HARN JUNC (CPS) (INCLS 50-57, 61, 63-66) (NOTE: DOES NOT INCL. COVER ASM-BAT 15328644)	00	Y	1	10443149
		8.965	FUSE, MAXI, 20 AMP (YELLOW) (ENG WRG HARN JUNC BLK) ...	97-00	.....	2	12065931
		8.965	FUSE, MAXI, 30 AMP (LT GREEN) (ENG WRG HARN JUNC BLK)	97-00	.....	2	12066932
		8.965	FUSE, MAXI, 40 AMP (AMBER) (ENG WRG HARN JUNC BLK) ...	97-00	.....	1	12065933
	2-N20	9.277	RELAY, A/C CMPR (GRAY) (4-WAY) (AC-DELCO #15-8571)	97	Y (EXC T90)	1	12088567
	2-N20	9.277	RELAY, A/C CMPR (GRAY) (4-WAY) (AC-DELCO #15-8571)	98-00	Y	1	12088567
	2-N20	9.277	RELAY, A/C CMPR (5-TERMINAL) (AC-DELCO #15-8721)	99	Y	1	12177233
	2-D19	3.670	RELAY, SECD AIR INJN PUMP (GRAY) (4-WAY) (9.277) (AC-DELCO #15-8571)	97-00	Y (LS1) (EXC T90)	1	12088567
	2-D23	3.680	RELAY, SECD AIR INJN BYPASS VLV WOT (GRAY) (4-WAY) (9.277) (AC-DELCO #15-8571)	97	Y	1	12088567

cardiagn.com

	2-D23	3.680	RELAY, SECD AIR INJN BYPASS VLV WOT (GRAY) (4-WAY) (9.277) (AC-DELCO #15-8571)	97-00	Y (LS1) (EXC T90)	1	12088567
	2-N15	4.720	RELAY, ELEK BRK CONT (GRAY) (4-WAY) (9.277) (AC-DELCO #15-8571)	97	Y (EXC T90)	1	12088567
	2-N16	7.450	RELAY, ROAD SENSING SUSP DPNR (GRAY) (4-WAY) (9.277) (AC-DELCO #15-8571)	97	Y	1	12088567
		8.965	FUSE, MINI, 25 AMP (CLEAR) (ENG WRG HARN JUNC BLK) ...	97-00	.....	1	12092076
		8.965	FUSE, MINI, 20 AMP (YELLOW) (ENG WRG HARN JUNC BLK) ...	97-00	.....	3	12092077
		8.965	FUSE, MINI, 15 AMP (BLUE) (ENG WRG HARN JUNC BLK) ...	97-00	.....	6	12092078
		8.965	ENG WRG HARN JUNC BLK (AC-DELCO #ATM10-25)	97-00	.....	15	88909753
	2-B10	2.483	BLOCK, ENG WRG HARN JUNC (CPS) (INCLS 50-57, 61, 63-66)	97	Y (T90) (EXPORT)	1	12161089
13.	2-B23	2.559	STUD, WRG HARN GND	97-98	Y	6	10278878
	2-B23	2.559	STUD, WRG HARN GND (1ST DSN STUD M6X1X25, FINISH COPPER FLASH, 2ND DSN 11518182)	99-00	Y (1ST DES)	6	10278878
	2-B23	2.559	STUD, WRG HARN GND (2ND DSN STUD-WELD M6X1X25, FINISH 6280, 1ST DSN 10278878)	99-00	Y (2ND DES)	6	11518182
14.		8.917	NUT, HFH M6X1X6.5 ZOR 9 (BAT NEG CBL GRND)	97-00	.....	1	3530297
15.	2-A15	2.341	CABLE, BAT NEG (PART OF 10) (AC-DELCO #4XX33-1)	97-00	Y	1	12157086
16.	2-A15	2.333	RETAINER, BAT H/SHLD (AT PLENUM) (POSN #2) (12.118) ...	97-00	Y	1	20510029
17.	2-A15	2.333	SHIELD, BAT HT	97-00	Y	1	10268286
18.	2-N17	8.010	SEAL, HOOD RR (EPDM EXTRUSION, BARRIER SEAL) ...	97-00	Y	1	10270456
19.	2-B15	2.530	INSULATOR, ENG WRG HARN (THERMO SHLD)	97-00	Y	1	10156146
20.	2-A15	2.333	BRACKET, BAT H/SHLD	97-00	Y	1	10281013
21.	2-B14	2.525	HARNESS, ENG WRG	97	Y (M30)	1	12163328
	2-B14	2.525	HARNESS, ENG WRG	97	Y (MM6)	1	12163330
	2-B14	2.525	HARNESS, ENG WRG	98	Y (M30) (EXC JAG)	1	12163328
	2-B14	2.525	HARNESS, ENG WRG	98	Y (MM6) (EXC JAG, VD1)	1	12163330
	2-B14	2.525	HARNESS, ENG WRG	98	Y (M30, JAG)	1	12163794
	2-B14	2.525	HARNESS, ENG WRG	98	Y (MM6, JAG) (EXC VD1)	1	12163795
	2-B14	2.525	HARNESS, ENG WRG	99-00	Y (MM6) (EXC VD1) ...	1	12189523
	2-B14	2.525	HARNESS, ENG WRG	99-00	Y (M30)	1	12189524
	2-B15	2.530	CONNECTOR, PWR DISTR BLK (BLACK) (68-WAY F M/P 280 FLXLK W/O LEADS)	97-00	Y	1	15303513
	2-B14	2.525	HARNESS, ENG WRG	98	Y (MM6, JAG, VD1) (EXPORT)	1	12189910
	2-B14	2.525	HARNESS, ENG WRG (ENHANCE EVAP EMISS)	99-00	Y (MM6, VD1) (EXPORT)	1	12189911

cardiagn.com

							1Y02-043
22.		8.900	SCREW, HEX M10X1.5X16 9.8 PE (BATT NEG CBL)	97-00		1	11513783
23.		8.900	BOLT, HEX CON WA M8X1.25X55 TYPE B 9.8 POR (BATT HOLDN RET)	97-00		1	11516700
24.	2-A15	2.335	RETAINER, BAT HOLDN	97-00	Y	1	14005061
25.	2-A15	2.333	TRAY, BAT (W/SUPT)	97-00	Y	1	10268430
26.		8.921	NUT-U, M8X1.25, 17 WIDE, 32 OAL, 21 CTR TO END, 8-4 PNL RANGE (BATT TRAY)	97-00		4	11516150
27.	2-A15	2.333	SUPPORT, BAT TRAY	97-00	Y	1	10400530
28.		8.900	BOLT, HFH LOCK, M8X1.25X25, 16THD, 18OD, 10.9, 4435M, MACH, 6MM DOG PT, 6175M (BAT TRAY TO SUPT)	97-00		4	11516720
29.		8.950	RETAINER, FITS .250 HOLE, 1.01LG.700-OD NYLON BLACK (BATT H/SHLD) (POSN #1)	97-00		1	10121502
30.	2-A15	2.342	CABLE, BAT POS (TO STARTER) (PART OF 10) (AC-DELCO #4SX37-1J)	97-00	Y	1	12157085
31.	2-A8	2.042	BOLT, STRTR (OUTBOARD) (HFH, M10X1.5X113.5, 22.5, 15 OD, 10.9)	97-98	Y	1	12558858
	2-A8	2.042	BOLT, STRTR (HFH, M10X1.5X113.5, 23.5 THD, 19.5 OD, 10.9, ZINC, MACH)	99-00	Y	1	12561387
32.	2-A8	2.042	BOLT, STRTR (INBOARD)	97-98	Y	1	12555160
	2-A8	2.042	BOLT, STRTR (HFH, M10X1.5X46.5, 23.5, 19 OD, 10.9, SPECIAL)	99-00	Y	1	12561848
33.	2-A15	2.343	NUT, BAT POS CBL (POSN #1) (8X1.25X5.95 BRASS)	97-00	Y	1	21021808
34.	2-A8	2.041	STARTER, (REMAN) (AC-DELCO #323-1063)	97-00	Y (LS1)	1	10465385
35.		8.917	NUT, HEX W/CON WA 6X1X5.5 16-OD ZP 9 (MULTIUSE RLY & FUSE BRKT) (POSN #2)	97-00		3	11517293
36.		8.917	NUT, HFH, M8X1.25, 17.9 OD, 738 THK, 13MM HEX, 10, ZF (I/P WRG HARN J/BLK) (8.915) (AC-DELCO #11514596)	97-00		1	11514596
37.	2-B10	2.483	BOLT, I/P WRG HARN ACSRY RLY & FUSE BLK CVR (THUMB-SCREW)	97-00	Y	1	12161064
38.	2-B10	2.483	BRACKET, I/P WRG HARN J/BLK (MTG BRKT SHLD) (PART OF 2)	97-00	Y	1	12176906
39.	2-B12	2.485	RELAY, DAYTIME RUNNING LP (PART OF 2) (BLACK) (5-WAY) (MICRO) (9.277) (AC-DELCO #15-5671)	97-00	Y	2	12077866
40.	2-N23	12.243	RELAY, R/CMPT LID REL (GRAY) (4-WAY) (9.277) (AC-DELCO #15-8571)	97-00	Y	1	12088567
	2-N26	13.095	RELAY, C/LP (GRAY) (4-WAY) (9.277) (AC-DELCO #15-8571)	97-00		1	12088567

cardiagn.com

							1Y02-043
	2-B13	2.490	RELAY, DISPLAY ILLUM CONT MDL (GRAY) (4-WAY) (9.277) (AC-DELCO #15-8571)	97-00	Y	1	12088567
41.	2-N21	9.778	RELAY, R/WDO DEFG (GRAY) (SPST 280 MINI) (4-TERMINAL) (AC-DELCO #15-8733)	97-00	Y	1	12193604
	2-N20	9.650	RELAY, RDO SPKR AMPF (GRAY) (SPST 280 MINI) (4-TERMINAL) (9.778) (AC-DELCO #15-8733)	97-00	Y	1	12193604
42.		8.965	BREAKER, CIRCUIT, 20 AMP, YELLOW (PART OF 2)	97-00	.....	2	12077861
43.		8.977	BOLT, HEX W/12.5 OD WA, M4.2X1.41X16 DBL LD HI-LO 6010M (I/P WRG HARN FUSE BLK)	97-00	.....	1	11515312
44.	2-B10	2.483	COVER, I/P WRG HARN J/BLK (PART OF 2)	97-00	Y	1	12194040
45.	2-B15	2.530	CONNECTOR, PWR DISTR BLK (GRAY) (68-WAY F, M/P 280 FLXLK, W/O LEADS)	97-00	Y	1	12177207
46.	2-B15	2.530	CONNECTOR, PWR DISTR BLK (BLACK) (68-WAY F, M/P 280 FLXLK, W/O LEADS)	97-00	Y	1	12177206
47.	2-B10	2.483	PLATE, MULTIUSE RLY BRKT STUD (M6 X 1 X 24) (1.271)	97	Y	2	10135646
	2-B10	2.483	PLATE, MULTIUSE RLY BRKT STUD (BRACKET REPLACES CENTER-MOST OF THE THREE SIMILAR BRACKETS ON THE PASSENGER SIDE OF DASHBOARD & BOTH BRACKETS ON DRIVER SIDE OF DASHBOARD) (3.162)	97	Y	1	10402723
	2-B10	2.483	PLATE, MULTIUSE RLY BRKT STUD (BRACKET REPLACES THE TWO OUTBOARD OF THE THREE SIMILAR BRACKETS ON THE PASSENGER SIDE OF DASHBOARD) (12.986)	97	Y	1	14058658
	2-B10	2.483	STUD, MULTIUSE RLY BRKT (ANC PLT) (M6 X 1 X 24) (1.271) .	98-00	Y	2	10135646
48.		8.917	NUT, HEX W/CON WA 24 OD, M6X1X5.6, 9M, PZOR (MULTIUSE RLY & FUSE BRKT) (POSN #1) ..	97-00	.....	2	11514275
49.	2-B10	2.483	BRACKET, MULTIUSE RLY & FUSE (PASS TOEBOARD BRKT) .	97-00	Y	1	10417445
50.	2-N12	1.055	RELAY, FAN CONT (PART OF 12) (GRAY) (SPST 280 MINI) (4-TERMINAL) (9.778) (AC-DELCO #15-8733)	97-00	Y	2	12193604
	2-N12	1.055	RELAY, FAN CONT (BLACK) (SPDT 280 MINI) (5-TERMINAL) (2.100) (AC-DELCO #D954A) ...	97	YY07 (T90)	1	12193602
51.	2-B12	2.485	RELAY, FOG LP (PART OF 12) (GRAY) (4-WAY) (9.277) (AC-DELCO #15-8571)	97-00	Y	1	12088567

cardiagn.com

							1Y02-043
52.	2-B27	2.698	RELAY, B/U LP (PART OF 12) (BLACK) (5-WAY) (MICRO) (9.277) (AC-DELCO #15-5671)	97	Y (EXC T90)	1	12077866
	2-B27	2.698	RELAY, B/U LP (PART OF 12) (BLACK) (5-WAY) (MICRO) (9.277) (AC-DELCO #15-5671)	98	Y (JAG)	1	12077866
	2-B27	2.698	RELAY, B/U LP (PART OF 12) (BLACK) (5-WAY) (MICRO) (9.277) (AC-DELCO #15-5671)	99-00	Y	1	12077866
53.	2-B14	2.510	RELAY, IGN (PART OF 12) (GRAY) (SPST 280 MINI) (4-TERMINAL) (9.778) (AC-DELCO #15-8733)	97-00	Y	1	12193604
54.	2-C5	2.815	RELAY, HORN (PART OF 12) (GRAY) (4-WAY) (9.277) (AC-DELCO #15-8571)	97-00	Y	1	12088567
55.	2-D28	3.900	RELAY, F/PMP (PART OF 12) (GRAY) (4-WAY) (9.277) (AC-DELCO #15-8571)	97-00	Y	1	12088567
56.	2-B10	2.483	PULLER, FUSE (PART OF 12) (MINI) (I/P COVER)	97	Y (T90)	1	12084791
	2-B10	2.483	PULLER, FUSE (PART OF 12) (ENG & MULTI J/BLK)	97	Y (EXC T90)	1	12193790
	2-B10	2.483	PULLER, FUSE (PART OF 12) (MINI) (I/P COVER)	98-99	Y	1	12084791
	2-B10	2.483	PULLER, FUSE (PART OF 12) (ENG & MULTI J/BLK)	00	Y	1	12193790
57.	2-N12	1.055	RELAY, FAN CONT (PART OF 12) (5-TERMINAL, SPDT, 280 MINI) (AC-DELCO #15-8720)	97-00	Y (EXC T90)	1	12177234
58.		8.917	NUT, HEX W/CON WA 6X1X5.5 16-OD ZP 9 (ENG WRG HARN J/BLK BRKT)	97-00	.....	2	11517293
59.		8.921	NUT, PUSH-ON, M6X1, SPR STL, STYLE 1, POR (ENG WRG HARN RLY BLK)	97-00	.....	2	14093869
60.	2-B10	2.483	STUD, ENG WRG HARN J/BLK (M6 X 1 X 24) (1.271)	97-00	Y	2	10135646
61.	2-B10	2.483	SHIELD, ENG WRG HARN J/BLK (PART OF 12)	97-00	Y	1	15319658
62.	2-A18	2.480	HARNESS, FWD LP WRG	97	Y (T96) (EXC T90)	1	12189881
	2-A18	2.480	HARNESS, FWD LP WRG	97	Y (EXC T96)	1	12189883
	2-A18	2.480	HARNESS, FWD LP WRG	98	Y (T96) (EXC JAG, T90)	1	12163322
	2-A18	2.480	HARNESS, FWD LP WRG	98	Y (EXC JAG, T96)	1	12163324
	2-A18	2.480	HARNESS, FWD LP WRG	98	Y (JAG, T96) (EXC JL4, T90)	1	12189515
	2-A18	2.480	HARNESS, FWD LP WRG	98	Y (JAG) (EXC JL4, T96)	1	12189517
	2-A18	2.480	HARNESS, FWD LP WRG	98	Y (JAG, JL4, T96) (EXC T90)	1	12189518
	2-A18	2.480	HARNESS, FWD LP WRG	98	Y (JAG, JL4) (EXC T96)	1	12189520
	2-A18	2.480	HARNESS, FWD LP WRG	99	Y07-67 (T96) (EXC JL4, T90)	1	12189973
	2-A18	2.480	HARNESS, FWD LP WRG	99	Y07-67 (EXC JL4, T90, T96)	1	12189974
	2-A18	2.480	HARNESS, FWD LP WRG	99	Y (JL4, T96) (EXC T90) .	1	12189976
	2-A18	2.480	HARNESS, FWD LP WRG	99	Y07-67 (JL4) (EXC T90, T96)	1	12189978
	2-A18	2.480	HARNESS, FWD LP WRG	99	Y37 (T96) (EXC JL4) ...	1	12189973

cardiagn.com

							1Y02-043
	2-A18	2.480	HARNESS, FWD LP WRG	99	Y37 (NV7) (EXC JL4, T96)	1	12189974
	2-A18	2.480	HARNESS, FWD LP WRG	00	Y07-67 (EXC JL4, T90)	1	15329403
	2-A18	2.480	HARNESS, FWD LP WRG	00	Y (JL4) (EXC T90)	1	15329406
	2-A18	2.480	HARNESS, FWD LP WRG	00	Y37 (EXC JL4)	1	15329403
	2-B15	2.530	CONNECTOR, PWR DISTR BLK (GRAY) (68-WAY F W/O LEADS)	97-99	Y	1	15303512
	2-A18	2.480	HARNESS, FWD LP WRG	97	Y (VD1) (EXPORT)	1	12189883
	2-A18	2.480	HARNESS, FWD LP WRG	97	Y (T90, VE1) (EXPORT)	1	12189884
	2-A18	2.480	HARNESS, FWD LP WRG	99	Y07-67 (T90) (EXC JL4) (EXPORT)	1	12189975
	2-A18	2.480	HARNESS, FWD LP WRG	99	Y07-67 (JL4, T90) (EXPORT)	1	12189978
	2-A18	2.480	HARNESS, FWD LP WRG	00	Y07-67 (T90) (EXC JL4) (EXPORT)	1	15329405
	2-A18	2.480	HARNESS, FWD LP WRG	00	Y07-67 (JL4, T90) (EXPORT)	1	15329408
63.		DISCON	LABEL, ENG WRG HARN ACSRY RLY & FUSE IDENT (PART OF 12)	97	Y07 (EXC T90)	1	15319540
	2-B10	2.483	LABEL, ENG WRG HARN ACSRY RLY & FUSE IDENT (PART OF 12)	98-99	Y	1	12194082
	2-B10	2.483	LABEL, ENG WRG HARN ACSRY RLY & FUSE IDENT (PART OF 12)	00	Y	1	15328703
	2-B10	2.483	LABEL, ENG WRG HARN ACSRY RLY & FUSE IDENT (PART OF 12)	97	Y07 (T90) (EXPORT) ...	1	12176792
64.		N.S.	COVER, ACSRY WRG J/BLK (PART OF 12)		.....		
65.	2-B10	2.483	BOLT, ENG WRG HARN J/BLK CVR (PART OF 12) (THUMB-SCREW)	97-00	Y	1	12161064
66.	2-B10	2.483	COVER, ENG WRG HARN J/BLK (PART OF 12) (USED WITH B+ COVER 15328644)	97-00	Y	1	15328643
67.	2-A15	2.343	COVER, BAT POS CBL J/BLK ...	97-98	Y	1	12176992
	2-A15	2.343	COVER, BAT POS CBL J/BLK (USED WITH ELEC CTR COVER 15328643)	97-00	Y	1	15328644

RPO DEFINITIONS

F45 – CHASSIS CONTINUOUS VALVE REAL TIME DAMPING
JAG – BRAKE PROVISIONS ABS LOCATION
JL4 – CONTROL ACTIVE BRAKE
LS1 – ENGINE GAS, 8 CYL, 5.7L, SFI, ALUMINUM ENGINE
MM6 – TRANSMISSION MAN 6 SPD, BORG WARNER, 85MM, 1ST 2.36, 6TH 0.50, O/D
M30 – TRANSMISSION,AUTOMATIC 4 SPEED,4L60E,ELECTRONIC
NV7 – STEERING,POWER,VARIABLE EFFORT
T90 – LAMP,SIGNALING AND MARKER(EXPORT)
T96 – LAMP,FRONT FOG
VD1 – PROVISION OPTIONS,EUROPE(EXPORT)
VE1 – PROVISION OPTIONS,JAPAN(EXPORT)

cardiagn.com

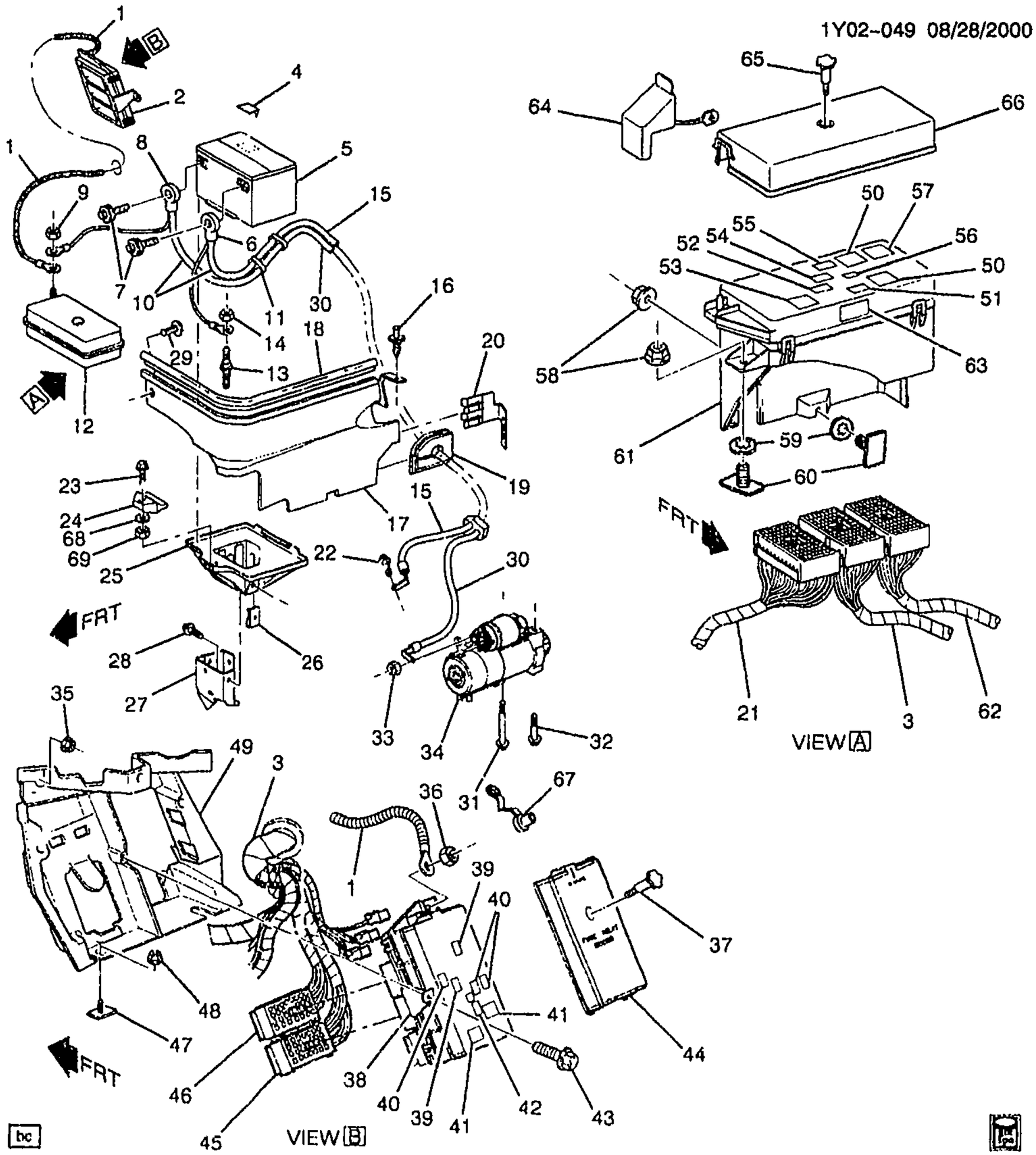

1Y02-049

2001-2002 Y BATTERY CABLES & RELATED PARTS

1.	2-A15	2.342	CABLE, BAT POS FUSE BLK (AC-DELCO #6CX40)	01-02 Y	1	12157091
2.	2-B10	2.483	BLOCK, I/P WRG HARN JUNC (INCLS 38, 39, 42, 44)	01-02 Y	1	10443148
		N.S.	LABEL, FUSE BLK IDENT	.....		

cardiagn.com

						TY02-049	
		8.965	BREAKER, FUSE BLOCK CIRC, 20 AMP (YELLOW) (16MM BETWEEN TERM) (CYCLING) ...	01-02	.....	1	12065132
		8.965	BREAKER, CIRCUIT, 20 AMP, YELLOW (NON-CYCLING)	01-02	.....	2	12077861
		8.965	FUSE, MAXI, 30 AMP (LT GREEN) ()	01-02	.....	1	12065932
		8.965	FUSE, MAXI, 40 AMP (AMBER) ()	01-02	.....	1	12065933
		8.965	FUSE, MAXI, 60 AMP (BLUE) () ..	01-02	.....	1	12065935
		8.965	FUSE, MINI, 25 AMP (CLEAR) () .	01-02	.....	1	12092076
		8.965	FUSE, MINI, 20 AMP (YELLOW) ()	01-02	.....	1	12092077
		8.965	FUSE, MINI, 15 AMP (BLUE) () ...	01-02	.....	1	12092078
		8.965	(AC-DELCO #ATM10-25)	01-02	.....	1	88909753
	2-B10	2.483	CONNECTOR, BLK-I/P WRG JUNC (BLACK) (2-WAY F, MAXI FUSE, W/LEADS) (2.530) (AC-DELCO #PT1187)	01-02	Y	1	15305928
3.		N.S.	HARNESS, I/P WRG (SEE GROUP 10 FOR DETAILED ILLUSTRATED VIEW)		.....		
4.	2-N18	8.808	LABEL, BAT CAUTION	01-02	Y07-67 (VBX)	1	15746390
5.		N.S.	BATTERY, (STORAGE) (W/HANDLE)		.....		
6.	2-A15	2.343	COVER, BAT NEG CBL TERM (PART OF 10) (BLACK VINYL) (SURROUNDS CABLE END AT BATT)	01-02	Y	1	12160209
7.		8.900	BOLT, HEX HD, 3/8-16X13/32, 1/4 THD, 1 5/32 TL, 51/64 OD, STL, ZP (BATT CBL TERM) (PART OF 10)	01-02	.....	2	8917444
8.	2-A15	2.343	COVER, BAT POS CBL TERM (PART OF 10) (RED VINYL) (SURROUNDS CABLE END AT BATT)	01-02	Y	1	12160210
9.		8.917	NUT, HFH, M8X1.25, 17.9 OD, 738 THK, 13MM HEX, 10, ZF (BATT POS CBL) (POSN #2) (8.915) (AC-DELCO #11514596)	01-02	.....	1	11514596
10.		N.S.	CABLE, BAT POS & NEG (CPS) (INCLS 6-8, 11, 15, 30)		.....		
		8.965	CONDUIT, ELECTRICAL (15 FT X .350 ID) (BAT CBL)	01-02	.....	AR	8919354
		8.965	CONDUIT, 10MM X 15 FEET (BLA/GRA NYLON) (BAT CBL) ...	01-02	.....	AR	12125347
11.	2-A15	2.343	CLIP, BAT CBL (PART OF 10)	01-02	Y	3	12124798
12.	2-B10	2.483	BLOCK, ENG WRG HARN JUNC (CPS) (INCLS 50-57, 61, 63-66) (NOTE: DOES NOT INCL. COVER ASM-BAT 15328644)	01-02	Y	1	10443149
		8.965	FUSE, MAXI, 20 AMP (YELLOW) (ENG WRG HARN JUNC BLK) ...	01-02	.....	2	12065931
		8.965	FUSE, MAXI, 30 AMP (LT GREEN) (ENG WRG HARN JUNC BLK)	01-02	.....	2	12065932
		8.965	FUSE, MAXI, 40 AMP (AMBER) (ENG WRG HARN JUNC BLK) ...	01-02	.....	1	12065933

cardiagn.com

	2-N20	9.277	RELAY, A/C CMPR (GRAY) (4-WAY) (AC-DELCO #15-8571)	01-02	Y	1	12088567
	2-D19	3.670	RELAY, SECD AIR INJN PUMP (GRAY) (4-WAY) (9.277) (AC-DELCO #15-8571)	01-02	Y	1	12088567
	2-D19	3.670	RELAY, SECD AIR INJN PUMP (GRAY) (4-WAY) (9.277) (AC-DELCO #15-8571)	01	Y	1	12088567
		8.965	FUSE, MINI, 25 AMP (CLEAR) (ENG WRG HARN JUNC BLK)	01-02		1	12092076
		8.965	FUSE, MINI, 20 AMP (YELLOW) (ENG WRG HARN JUNC BLK)	01-02		3	12092077
		8.965	FUSE, MINI, 15 AMP (BLUE) (ENG WRG HARN JUNC BLK)	01-02		6	12092078
		8.965	ENG WRG HARN JUNC BLK (AC-DELCO #ATM10-25)	01-02		15	88909753
13.		N.S.	STUD, WRG HARN GND	01-02			
14.		8.917	NUT, HFH M6X1X6.5 ZOR 9 (BAT NEG CBL GRND)	01-02		1	3530297
15.	2-A15	2.341	CABLE, BAT NEG (PART OF 10) (AC-DELCO #4XX33-1)	01-02	Y	1	12157086
16.	2-A15	2.333	RETAINER, BAT H/SHLD (AT PLENUM) (POSN #2) (12.118)	01-02	Y	1	20510029
17.	2-A15	2.333	SHIELD, BAT HT	01-02	Y	1	10268286
18.	2-N17	8.010	SEAL, HOOD RR (HOOD SIDE TO FENDER)	01-02	Y	2	10404247
	2-N17	8.010	SEAL, HOOD RR (EPDM EXTRUSION, BARRIER SEAL)	01-02	Y	1	10270456
19.	2-B15	2.530	INSULATOR, ENG WRG HARN (THERMO SHLD)	01-02	Y	1	10156146
20.	2-A15	2.333	BRACKET, BAT H/SHLD	01-02	Y	1	10281013
21.	2-B14	2.525	HARNESS, ENG WRG	01-02	Y (M30)	1	15329389
	2-B14	2.525	HARNESS, ENG WRG	01-02	Y (MM6)	1	15329391
	2-B14	2.525	HARNESS, ENG WRG	01-02	Y37 (LS6, M12)	1	15329391
	2-B14	2.525	HARNESS, ENG WRG	02	YY37	1	15329391
22.		8.900	SCREW, HEX M10X1.5X16 9.8 PE (BATT NEG CBL)	01-02		1	11513783
23.		8.900	BOLT, HEX CON WA M8X1.25X55 TYPE B 9.8 POR (BATT HOLDN RET)	01-02		1	11516700
24.	2-A15	2.335	RETAINER, BAT HOLDN	01-02	Y	1	14005061
25.	2-A15	2.333	TRAY, BAT (W/SUPT)	01-02	Y	1	10268430
26.		8.921	NUT-U, M8X1.25, 17 WIDE, 32 OAL, 21 CTR TO END, 8-4 PNL RANGE (BATT TRAY)	01-02		4	11516150
27.	2-A15	2.333	SUPPORT, BAT TRAY	01-02	Y	1	10400530
28.		8.900	BOLT, HFH LOCK, M8X1.25X25, 16THD, 18OD, 10.9, 4435M, MACH, 6MM DOG PT, 6175M (BAT TRAY TO SUPT)	01-02		4	11516720
29.		8.950	RETAINER, FITS 250 HOLE, 1.01LG.700-OD NYLON BLACK (BATT H/SHLD) (POSN #1)	01-02		1	10121502
30.	2-A15	2.342	CABLE, BAT POS (TO STARTER) (PART OF 10) (AC-DELCO #4SX37-1J)	01-02	Y	1	12157085

cardiagn.com

31.	2-A8	2.042	BOLT, STRTR (INBOARD) (HFH, M10X1.5X46.5, 23.5, 19 OD, 10.9, SPECIAL)	01-02	Y	1	12561848
	2-A8	2.042	BOLT, STRTR (OUTBOARD) (HFH, M10X1.5X113.5, 23.5 THD, 19.5 OD, 10.9, ZINC, MACH)	01-02	Y	2	12561387
32.	2-A8	2.042	BOLT, STRTR (INBOARD) (HFH, M10X1.5X46.5, 23.5, 19 OD, 10.9, SPECIAL)	01-02	Y	1	12561848
	2-A8	2.042	BOLT, STRTR (OUTBOARD) (HFH, M10X1.5X113.5, 23.5 THD, 19.5 OD, 10.9, ZINC, MACH)	01-02	Y	2	12561387
33.	2-A15	2.343	NUT, BAT POS CBL (POSN #1) (8X1.25X5.95 BRASS)	01-02	Y	1	21021808
34.	2-A8	2.041	STARTER, (REMAN) (AC-DELCO #323-1063)	01	Y (LS1)	1	10465385
	2-A8	2.041	STARTER, (REMAN) (AC-DELCO #323-1063)	01	Y (LS6)	1	10465385
	2-A8	2.041	STARTER, (REMAN) (AC-DELCO #323-1450)	02	Y (LS1, LS6)	1	10465547
35.		8.917	NUT, HEX W/CON WA 6X1X5.5 16-OD ZP 9 (MULTIUSE RLY & FUSE BRKT) (POSN #2)	01-02		3	11517293
36.		8.917	NUT, HFH, M8X1.25, 17.9 OD, 738 THK, 13MM HEX, 10, ZF (I/P WRG HARN J/BLK) (8.915) (AC-DELCO #11514596)	01-02		1	11514596
37.	2-B10	2.483	BOLT, I/P WRG HARN ACSRY RLY & FUSE BLK CVR (THUMB-SCREW)	01-02	Y	1	12161064
38.	2-B10	2.483	BRACKET, I/P WRG HARN J/BLK (MTG BRKT SHLD) (PART OF 2)	01-02	Y	1	12176906
39.	2-B12	2.485	RELAY, DAYTIME RUNNING LP (PART OF 2) (BLACK) (5-WAY) (MICRO) (9.277) (AC-DELCO #15-5671)	01-02	Y	2	12077866
40.	2-N23	12.243	RELAY, R/CMPT LID REL (GRAY) (4-WAY) (9.277) (AC-DELCO #15-8571)	01-02	Y	1	12088567
	2-N26	13.095	RELAY, C/LP (GRAY) (4-WAY) (9.277) (AC-DELCO #15-8571)	01-02	Y	1	12088567
	2-B13	2.490	RELAY, DISPLAY ILLUM CONT MDL (GRAY) (4-WAY) (9.277) (AC-DELCO #15-8571)	01-02	Y	1	12088567
41.	2-N21	9.778	RELAY, R/WDO DEFG (GRAY) (SPST 280 MINI) (4-TERMINAL) (AC-DELCO #15-8733)	01-02	Y	1	12193604
	2-N20	9.650	RELAY, RDO SPKR AMPF (GRAY) (SPST 280 MINI) (4-TERMINAL) (9.778) (AC-DELCO #15-8733)	01-02	Y	1	12193604
42.		8.965	BREAKER, CIRCUIT, 20 AMP. YELLOW (PART OF 2)	01-02		2	12077861
43.		8.977	BOLT, HEX W/12.5 OD WA, M4.2, [illegible]41X16 DBL LD HI-LO 601CM (I/P WRG HARN FUSE BLK)	01-02		1	11515312
44.	2-B10	2.483	COVER, I/P WRG HARN J/BLK (PART OF 2)	01-02	Y	1	12194040

cardiagn.com

45.	2-B15	2.530	CONNECTOR, PWR DISTR BLK (68-WAY F, M/P 280 FLXLK, W/O LEADS, GRAY)				12177205
46.	2-B15	2.530	CONNECTOR, PWR DISTR BLK (BLACK) (68-WAY F M/P 280 FLXLK W/O LEADS)				15303513
47.	2-B10	2.483	STUD, MULTIUSE RLY BRKT (ANC PLT) (M6 X 1 X 24) (1.271)	01-02	Y	2	10135646
48.		8.917	NUT, HEX W/CON WA, 24 OD, M6X1X5.6, 9M, PZOR (MULTIUSE RLY & FUSE BRKT) (POSN #1)	01-02		2	11514275
49.	2-B10	2.483	BRACKET, MULTIUSE RLY & FUSE (PASS TOEBOARD BRKT) (2ND DSN USES VELCRO FASTENERS TO ATTACH BRACKET. 1ST DSN SEE P/N 10417445.)	01	Y (2ND DES)	1	10317346
	2-B10	2.483	BRACKET, MULTIUSE RLY & FUSE (PASS TOEBOARD BRKT) (1ST DSN USES RUBBER CAM LOCK FASTENERS TO ATTACH BRACKET. 2ND DSN SEE P/N 10317346)	01	Y (1ST DES)	1	10417445
	2-B10	2.483	BRACKET, MULTIUSE RLY & FUSE (PASS TOEBOARD BRKT)	02	Y	1	10317346
	2-B10	2.483	BRACKET, MULTIUSE RLY & FUSE (PASS TOEBOARD BRKT)	02	Y	1	10417445
50.	2-N12	1.055	RELAY, FAN CONT (PART OF 12) (GRAY) (SPST 280 MINI) (4-TERMINAL) (9.778) (AC-DELCO #15-8733)	01-02	Y	AR	12193604
	2-N12	1.055	RELAY, FAN CONT (1-SERIES/PARALLEL) (SPDT), 1- (HIGH SPEED) (S) (PART OF 12) (5-TERMINAL, SPDT, 280 MINI) (AC-DELCO #15-8720)	01-02	Y	1	12177234
51.	2-B12	2.485	RELAY, FOG LP (PART OF 12) (GRAY) (4-WAY) (9.277) (AC-DELCO #15-8571)	01-02	Y	1	12088567
52.	2-B27	2.698	RELAY, B/U LP (PART OF 12) (BLACK) (5-WAY) (MICRO) (9.277) (AC-DELCO #15-5671)	01-02	Y	1	12077866
53.	2-B14	2.510	RELAY, IGN (PART OF 12) (GRAY) (SPST 280 MINI) (4-TERMINAL) (9.778) (AC-DELCO #15-8733)	01-02	Y	1	12193604
54.	2-C5	2.815	RELAY, HORN (PART OF 12) (GRAY) (4-WAY) (9.277) (AC-DELCO #15-8571)	01-02	Y	1	12088567
55.	2-D28	3.900	RELAY, F/PMP (PART OF 12) (GRAY) (4-WAY) (9.277) (AC-DELCO #15-8571)	01-02	Y	1	12088567
56.	2-B10	2.483	PULLER, FUSE (PART OF 12) (ENG & MULTI J/BLK)	01-02	Y	1	12193790
57.	2-N12	1.055	RELAY, FAN CONT (PART OF 12) (GRAY) (SPST 280 MINI) (4-TERMINAL) (9.778) (AC-DELCO #15-8733)	01-02	Y	AR	12193604

cardiagn.com

	2-N12	1.055	RELAY, FAN CONT (1-SERIES/PARALLEL) (SPDT), 1- (HIGH SPEED) (S) (PART OF 12) (5-TERMINAL, SPDT, 280 MINI) (AC-DELCO #15-8720) ..	01-02	Y	1	12177234
58.		8.917	NUT, HEX W/CON WA 6X1X5.5 16-OD ZP 9 (ENG WRG HARN J/BLK BRKT)	01-02	.....	2	11517293
59.		8.921	NUT, PUSH-ON, M6X1, SPR STL, STYLE 1, POR (ENG WRG HARN RLY BLK)	01-02	.....	2	14093869
60.	2-B10	2.483	STUD, ENG WRG HARN J/BLK (M6 X 1 X 24) (1.271)	01-02	Y	2	10135646
61.	2-B10	2.483	SHIELD, ENG WRG HARN J/BLK (PART OF 12)	01-02	Y	1	15319658
62.	2-A18	2.480	HARNESS, FWD LP WRG (2ND DSN USED ON/AFTER VIN #15107689, (1ST DSN 10448116))	01	YY07-67 (JL4) (EXC T90) (2ND DES)	1	10310796
	2-A18	2.480	HARNESS, FWD LP WRG (2ND DSN USED ON/AFTER VIN #15107689, (1ST DSN 10448118))	01	YY07-67 (JL4, T90) (2ND DES)	1	10310798
	2-A18	2.480	HARNESS, FWD LP WRG (1ST DSN USED B/4 VIN #15107689, (2ND DSN 10310796))	01	YY07-67 (JL4) (EXC T90) (1ST DES)	1	10448116
	2-A18	2.480	HARNESS, FWD LP WRG (1ST DSN USED B/4 VIN #15107689, (2ND DSN 10310798))	01	YY07-67 (JL4, T90) (1ST DES)	1	10448118
	2-A18	2.480	HARNESS, FWD LP WRG	01-02	YY37	1	10310796
	2-A18	2.480	HARNESS, FWD LP WRG	01	YY37	1	10448116
	2-A18	2.480	HARNESS, FWD LP WRG	02	YY07-67 (EXC T90) ...	1	10310796
	2-A18	2.480	HARNESS, FWD LP WRG	02	YY07-67 (T90) (EXPORT)	1	10310798
63.	2-B10	2.483	LABEL, ENG WRG HARN ACSRY RLY & FUSE IDENT (PART OF 12)	01-02	Y	1	15328703
64.		N.S.	COVER, ACSRY WRG J/BLK (PART OF 12)		....		
65.	2-B10	2.483	BOLT, ENG WRG HARN J/BLK CVR (PART OF 12) (THUMB-SCREW)	01-02	Y	1	12181064
66.	2-B10	2.483	COVER, ENG WRG HARN J/BLK (PART OF 12) (USED WITH B+ COVER 15328644)	01-02	Y	1	15328643
67.	2-A15	2.343	COVER, BAT POS CBL J/BLK (USED WITH ELEC CTR COVER 15328643)	01-02	Y	1	15328644
68.		8.929	WASHER, M10 X 22 X 3.1 (BAT HOLDN RET) (8.846)	01-02	....	AR	15650963
69.		8.921	NUT, METRIC PUSH-ON BOLT RETAINING SPRING	01-02	....	AR	10009923

RPO DEFINITIONS
JL4 - CONTROL ACTIVE BRAKE
LS1 - ENGINE GAS, 8 CYL, 5.7L, SFI, ALUMINUM ENGINE
LS6 - ENGINE GAS, 8 CYL, 5.7L, SFI, ALUMINUM, HIGH OUTPUT
MM6 - TRANSMISSION MAN 6 SPD, BORG WARNER, 85MM, 1ST 2.66, 6TH 0.50, O/D
M12 - TRANSMISSION MAN 6 SPD, TREMEC, 85MM, 1ST 2.97, 6TH 0.57, O/D

cardiagn.com

T90 – LAMP,SIGNALING AND MARKER(EXPORT)
VBX – LANGUAGE LABEL ARABIC

cardiagn.com

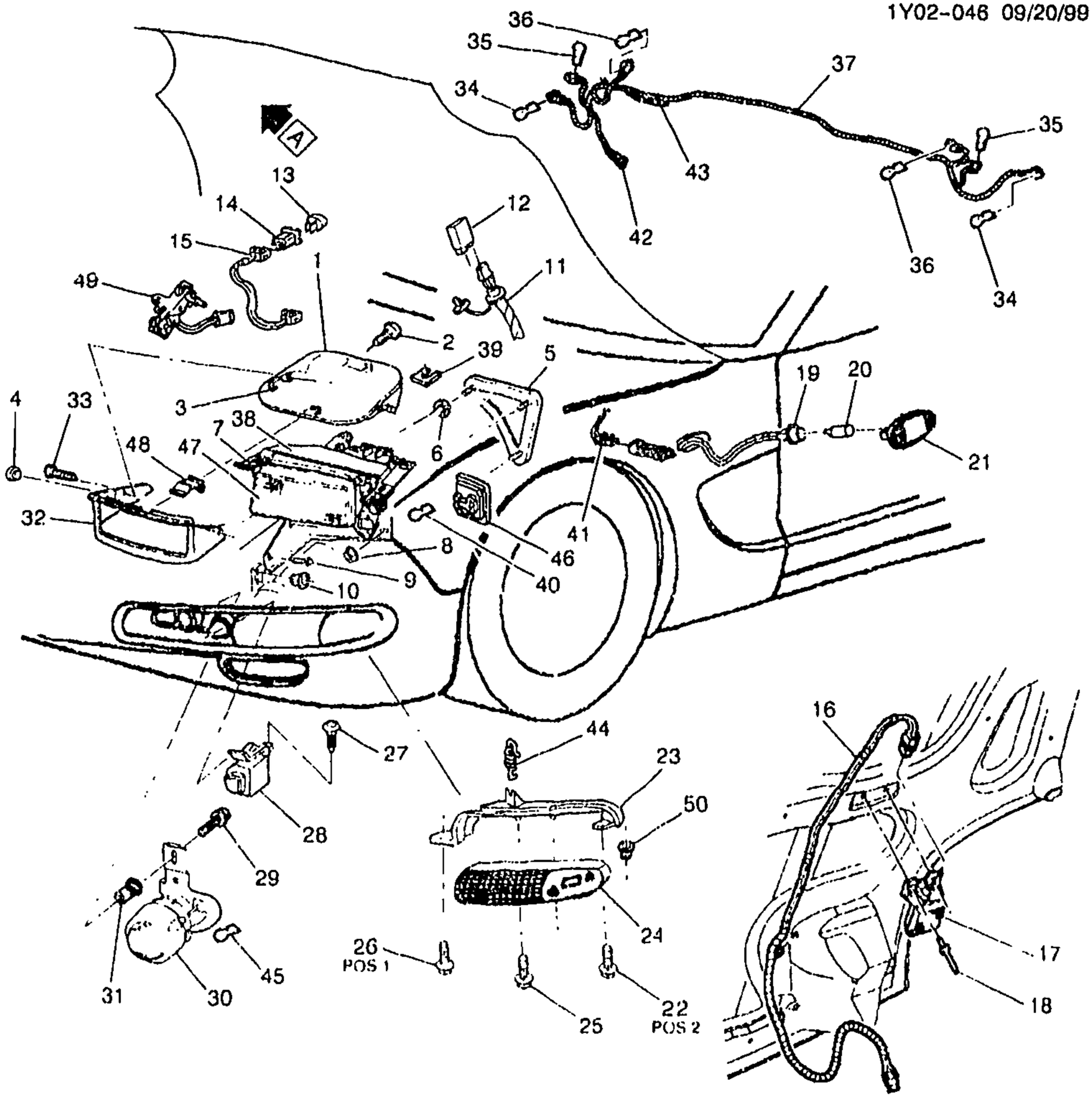

VIEW "A"

1Y02-046

1997-2002 Y LAMPS/FRONT

1.	2-C3	2.728	DOOR, HDLP OPG (INCLS 3) ...	97-02	Y	RH	10447811
	2-C3	2.728	DOOR, HDLP OPG (PIM PLASTIC) (INCLS 3)	97-02	Y	LH	10447810
2.		8.977	SCREW, PAN HD TORX W/FL WA M4 2X1.41X20303 BLK (HDLP DR ATTCH VERTICAL)	97-02	.....	8	11508561

cardiagn.com

3.		8.921	NUT, U TYPE, MULTI THD, PREV TORQ, M4.2X1.41TAP, 8.1REACH, 0.65–3.80 PNLS 1065 PZOR (HDLP BZL) (PART OF 1) (AC–DELCO #11513599)	97–02	.....	6	11513599
4.	2–C3	2.729	PLUG, HDLP OPG DR ADJR ACC HOLE (2.40DIA)	00–02	Y	2	10435410
	2–C3	2.729	PLUG, HDLP OPG DR ADJR ACC HOLE (FOR 1ST DES SEE 10297460. WHEN REPLACING PLUG WITHOUT COIN SLOT, BOTH LEFT & RIGHT BEZELS & PLUGS NEED TO BE REPLACED WITH NEW BEZELS & PLUGS.) (2.40DIA)	97	Y (2ND DES)	2	10435410
	2–C3	2.729	PLUG, HDLP OPG DR ADJR ACC HOLE (FOR 2ND DES SEE 10400759) (1.30"DIAM) (2.728) ..	97	Y (1ST DES)	2	10297460
	2–C3	2.729	PLUG, HDLP OPG DR ADJR ACC HOLE (WHEN REPLACING PLUG WITHOUT COIN SLOT, BOTH LEFT & RIGHT BEZELS & PLUGS TO BE REPLACED WITH NEW BEZELS & PLUGS.) (2.40DIA)	98–99	Y	2	10435410
5.	2–C2	2.726	PLATE, HDLP STUD	97–02	Y	LH	10290321
	2–C2	2.726	PLATE, HDLP STUD	97–02	Y	RH	10290322
6.		8.921	NUT, PUSH–ON, M6X1, SPR STL, STYLE 1, POR (HDLP RET–BRKT TO W/H)	97–02	.....	4	14093869
7.	2–B28	2.725	HEADLAMP, (W/OPG DR ACT) (MINI COMP, 94K)	97–02	Y (EXC T84, T85)	LH	10302673
	2–B28	2.725	HEADLAMP, (W/OPG DR ACTR) (MINI COMP, 94K)	97–02	Y (EXC T84, T85)	RH	16526230
	2–B12	2.485	CONNECTOR, MDL–HDLP CONT (5–WAY F, W/LEADS) (2.760) (AC–DELCO #PT284) ...	97–02	Y	1	12102775
	2–B12	2.485	CONNECTOR MDL–HDLP CONT (4–WAY F, W/LEADS) (2.170) (AC–DELCO #PT402) ...	97–02	Y	1	12102776
	2–B28	2.725	HEADLAMP, (W/OPG DR ACTR) (JAPAN & UK 'LH RULE OF ROAD')	97–02	Y (T85) (EXPORT)	RH	10302674
	2–B28	2.725	HEADLAMP, (W/OPG DR ACTR) (JAPAN & UK 'LH RULE OF ROAD')	97–02	Y (T85) (EXPORT)	LH	10302675
	2–B28	2.725	HEADLAMP, (W/OPG DR ACTR) (MINI COMP, 94K) (EUROPE 'RH RULE OF ROAD')	97–02	Y (T84) (EXPORT)	RH	10302676
	2–B28	2.725	HEADLAMP, (W/OPG DR ACTR) (MINI COMP, 94K) (EUROPE 'RH RULE OF ROAD')	97–02	Y (T84) (EXPORT)	LH	10302677
8		8.917	NUT, HEX W/CON W/A 6X1X5 5 16- OD ZP 9 (HDLP)	97–02	.....	6	11517293
9.		8.900	BOLT–HEX, M8X1 25X30, 22 THD, 24MM OD, 9 8, 7114M (HDLP BRKT)	97–02	.....	4	11516594
10.	2–C2	2.726	NUT, HDLP BRKT (3 015)	97–02	Y	4	10281493

cardiagn.com

11.	2-B12	2.485	SENSOR, DAYTIME RUNNING LP AMB LGT	97-98	Y (Z49)	1	10261143
	2-B12	2.485	SENSOR, DAYTIME RUNNING LP AMB LGT	99-02	Y (T82, Z49)	1	12450121
12.	2-B12	2.485	MODULE, HDLP AUTO CONT	97-98	Y (Z49)	1	10407669
13.	2-B25	2.575	PUSHBUTTON, HAZARD WRNG SW	97-02	Y	1	10295550
14.	2-B25	2.575	SWITCH, HAZARD WRNG	97-02	Y (EXC VD1)	1	10406626
	2-B25	2.575	SWITCH, HAZARD WRNG	97-02	Y (VD1) (EXPORT)	1	10406627
15.	2-A18	2.480	HARNESS, HAZARD LP & T/SIG LP FLSHR WRG	97-02	Y	1	12163776
	2-B25	2.575	CONNECTOR, SW-HAZARD WRNG (10-WAY F W/LEADS) (2.535) (AC-DELCO #PT150)	97-02	Y	1	12101762
	2-B25	2.575	CONNECTOR, SW-HAZARD WRNG (10-WAY M W/LEADS) (2.535) (AC-DELCO #PT215)	97-02	Y	1	12101823
	2-B25	2.575	CONNECTOR, SW-HAZARD WRNG (10-WAY M W/LEADS) (2.535) (AC-DELCO #PT215)	02	YY67	1	12101823
	2-B15	2.530	CONNECTOR, INLINE-TO I/P HARN (10-WAY F W/LEADS) (2.535) (AC-DELCO #PT150)	97-00	Y	1	12101762
16.	2-N19	8.890	HARNESS, U/HOOD LP WRG	97-98	Y	1	12163775
	2-N19	8.890	HARNESS, U/HOOD LP WRG	99-00	Y07-67	1	12163775
	2-N19	8.890	HARNESS, U/HOOD LP WRG	99-00	Y37 (TR9)	1	12163775
	2-N19	8.890	HARNESS, U/HOOD LP WRG	01-02	Y	1	12163775
	2-N19	8.890	CONNECTOR, LP-U/HOOD (BLACK) (2-WAY F W/LEADS) (2.383) (AC-DELCO #PT169)	97-00	Y	1	12101899
	2-B15	2.530	CONNECTOR, INLINE-TO FWD LP HARN (BLACK) (2-WAY F W/LEADS) (3.670) (AC-DELCO #PT374)	97-00	Y	1	12102747
17.	2-N19	8.890	LAMP, U/HOOD	97-99	Y	1	25536936
	2-N19	8.890	LAMP, U/HOOD	00-02	Y	1	10303617
		8.991	BULB, 12CP ID 561 (U/HOOD LP) (AC-DELCO #L561)	97-02		1	9433040
18.		8.067	RIVET, BLIND LG HD, .125-.187 GRIP (U/HOOD LP)	97-02		2	9432652
19.	2-B25	2.575	SOCKET, FRT SI MKR LP (PART OF 37) (W/LEADS) (2.598) (AC-DELCO #LS44)	97-02	Y	2	12141388
	2-B26	2.596	SOCKET, FRT T/SIG LP (PART OF 37) (2.694) (AC-DELCO #LS67)	97-98	Y (T90) (EXPORT)	2	12166325
	2-B26	2.596	SOCKET, FRT T/SIG LP (PART OF 37) (2.694) (AC-DELCO #LS67)	99-02	Y07-67 (T90) (EXPORT)	2	12166325
20.		8.991	BULB (W5W) (PARK & T/SIG LP) (W/T90)	97-02		2	9442398
21.	2-B26	2.596	CONNECTOR, LP T/SIG (BLACK) (2-WAY F W/LEADS) (3.670) (AC-DELCO #PT374)	97-98	Y	2	12102747
	2-B26	2.596	CONNECTOR, LP T/SIG (BLACK) (2-WAY F W/LEADS) (3.670) (AC-DELCO #PT374)	99-02	Y07-67	2	12102747

cardiagn.com

	2-B25	2.585	LAMP, FRT T/SIG (SI REPEATER) (2.880)	97-02	Y (T90) (EXPORT)	2	16530239
22.		8.977	BOLT, HWH, M4.2X1.41X20, 7.8 OD, ST, 6172M, ZN BR, TAP DRILL PT (FRT T/SIG LP BRKT) (POSN #2)	97-02		2	11513568
23.	2-B25	2.587	BRACKET, FRT T/SIG LP (SHARK CAGE)	97-02	Y	LH	10269679
	2-B25	2.587	BRACKET, FRT T/SIG LP (SHARK CAGE)	97-02	Y	RH	10269680
24.	2-B25	2.585	LAMP, PARK & FRT SI MKR & T/SIG (POLYCARBONATE) (INCLS 35)	97-02	Y (EXC T90)	RH	10301356
	2-B25	2.585	LAMP, PARK & FRT SI MKR & T/SIG (POLYCARBONATE) (INCLS 35)	97-02	Y (EXC T90)	LH	10301357
	2-B26	2.596	CONNECTOR, INLINE-TO PARK & T/SIG LP HARN (8-WAY M W/LEADS) (2.530) (AC-DELCO #PT443)	97-02	Y	1	12117270
	2-B25	2.585	LAMP, PARK & FRT SI MKR & T/SIG (INCLS 35)	97-02	Y (T90) (EXPORT)	LH	5977961
	2-B25	2.585	LAMP, PARK & FRT SI MKR & T/SIG (INCLS 35)	97-02	Y (T90) (EXPORT)	RH	5977962
25.		8.977	BOLT, HEX W/12.5 OD WA, M4.2X1.41X16 DBL LD HI-LO 6010M (FRT T/SIG LP)	97-02		4	11515312
26.		8.900	SCREW, HWH TAPPING M6.6X1.69X20 6010M BLK ZINC (FRT T/SIG LP BRKT) (POSN #1)	97-02		2	20007304
27.		8.977	BOLT-SCREW, M4.2X1.41X13, 5.4 THD, 12.5 OD, GM6172M, GM6138M (FRT MKR LP)	97-02		2	15714277
28.	2-B25	2.575	LAMP, FRT MKR (POLYCARBONATE)	97-02	Y (T90) (EXPORT)	LH	16523527
	2-B25	2.57	LAMP, FRT MKR (POLYCARBONATE)	97-02	Y (T90) (EXPORT)	RH	16523528
29.		8.900	BOLT, HEX W/CON WA, M6X1X20 (FRT FOG LP) (W/T96)	97-02		2	11514623
30.	2-B28	2.725	LAMP, FRT FOG (GLS LENS/DIE CAST)	97-99	Y (T96) (EXC T90)	RH	10256060
	2-B28	2.725	LAMP, FRT FOG (GLS LENS/DIE CAST) (WHEN REPLC THE FOG LAMP, CHECK OPPOSITE SIDE BULB TO VERIFY THAT THETRADE # IS 899 IF BULB IS NOT TRADE 899, REPLC WITH 899 BULB, PART 16525392	97-02	Y (T96) (EXC T90)	LH	10438855
	2-B28	2.725	LAMP, FRT FOG (GLS LENS/DIE CAST)	00-02	Y (T96) (EXC T90)	RH	10438856
	2-C3	2.727	BULB, FRT FOG LP (AC DELCO #899)	00-02	Y (T96) (EXC T90)	2	16525392

cardiagn.com

							1Y02-046
	2-C3	2.727	CONNECTOR, LP-FOG (BLACK 12085498) (2-WAY F W/LEADS) (USED ON FOG LAMPS W/ STRAIGHT TERMINALS 90DEG TERMS SEE) (2.535) (AC-DELCO #PT331)	97-02	Y	2	12102664
	2-B26	2.725	LAMP, FRT FOG (GLS LENS/DIE CAST)	97-02	Y (T90, T96) (EXPORT)	LH	10274295
	2-B26	2.725	LAMP, FRT FOG (GLS LENS/DIE CAST)	97-02	Y (T90, T96) (EXPORT)	RH	10274296
	2-C3	2.727	BULB, FRT FOG LP (AC-DELCO #L893)	97-99	Y (T96) (EXC T90) (EXPORT)	2	9442881
	2-C3	2.727	BULB, FRT FOG LP (AC-DELCO #H3)	97-02	Y (T90, T96) (EXPORT)	2	11513798
	2-C3	2.727	CONNECTOR, LP-FOG (2-WAY M) (W/LEADS) (2.535) (AC-DELCO #PT561)	97-98	Y (T90) (EXPORT)	2	12125649
	2-C3	2.727	CONNECTOR, LP- FOG (BLACK) (2-WAY M) (W/O LEADS) (2.530)	98	Y (T90) (EXPORT)	1	12162000
	2-C3	2.727	CONNECTOR, LP-FOG (BLACK) (2-WAY M) (W/O LEADS) (2.530)	99-00	Y07-67 (T90) (EXPORT)	1	12162000
31.	2-C2	2.726	NUT, FRT FOG LP (4.666)	97-99	Y	2	10281487
		8.921	NUT, U-SHAPED MULTI THREAD SPRG (FRT FOG LP) ..	00-02	.....	2	11515478
32.	2-C3	2.728	BEZEL, HDLP (NEW BEZELS USE PLUG WITH COIN SLOT 10435410, REPLACE CANCELLED BEZELS AS PAIR & WITH NEW PLUGS WITH SLOTS.)	97-02	Y	LH	10435411
	2-C3	2.728	BEZEL, HDLP (NEW BEZELS USE PLUG WITH COIN SLOT 10435410, REPLACE CANCELLED BEZELS AS PAIR & WITH NEW PLUGS WITH SLOTS)	97-02	Y	RH	10435412
33.		8.977	SCREW, OV HD C/R C/S TAP M4.2X1.41X16 9.45--OD DRILL PT NI ORG (HDLP BZL)	97-02	.....	6	11508614
34.		8.991	TRADE#194, 12V, 2CP (FRT SI MKR LP) (EXC T90) (AC-DELCO #L194)	97-02	.....	2	9421330
		8.991	BULB (TRADE #WEW) (E C E) (FRT SI MKR LP) (W/T90) (AC -DELCO #W3W)	97-02	.....	2	9442445
35.		8.991	BULB (W5W) (PARK & T/SIG LP)	97-01	.....	AR	9442399
		8.991	BULB, TRADE# 4157NAK (PART OF 24)) (AC DELCO #4157NA/K)	97-02	.....	2	12480182
36.		8.991	BULB (W5W) (PARK & T/SIG LP) (W/T90)	97-02	.....	2	9442399
	2-B26	2.575	SOCKET, FRT SI MKR LP (PART OF 37) (W/LEADS) (2.596) (AC-DELCO #LS44)	97-02	Y	2	12141388

cardiagn.com

							1Y02-046
	2-B26	2.696	SOCKET, FRT PARK & T/SIG LP (2.694) (AC-DELCO #LS15)	97-02	Y (EXC T90)	2	12083689
37.	2-A18	2.480	HARNESS, FWD LP WRG HARN EXTN (CPS) (INCLS 19, 42-43) ..	97-99	Y (EXC T90)	1	12163711
	2-A18	2.480	HARNESS, FWD LP WRG HARN EXTN (CPS) (INCLS 19, 42-43) ..	00-02	Y (EXC T90)	1	15329462
	2-B15	2.530	CONNECTOR, WRG HARN	01-02	Y	1	15305292
	2-B15	2.530	CONNECTOR, WRG HARN (ACTS AS A COVER FOR MATING PART 15305291.)	02	YY67 (M30, CJ2, N37) (EXC T89)	1	15305292
	2-B15	2.530	CONNECTOR, WRG HARN (12 WAY F GT-280, W/O UPR CONN/CVR, W/0 LEADS, MATES W/15305292 CONN/CVR) (12-WAY F)	97-02	Y	1	15305291
	2-B15	2.530	CONNECTOR, WRG HARN (12-WAY FEMALE GT 150 (W/LEADS) .) (12-WAY F) (W/LEADS AND CAP) (2.440) (AC-DELCO #PT1101)	97-02	YY67	1	15305914
	2-B15	2.530	CONNECTOR, WRG HARN (12-WAY FEMALE GT 150 (W/LEADS) .) (12-WAY F) (W/LEADS AND CAP) (2.440) (AC-DELCO #PT1101)	02	YY67 (M30, CJ2, N37) (EXC T89)	1	15305914
	2-B15	2.530	PLUG, WRG HARN CONN (UNUSED CAV) (BLACK) (1-WAY M)	97-02	Y	2	12059168
	2-B15	2.530	PLUG, WRG HARN CONN (UNUSED CAV) (BLACK) (1-WAY M)	02	YY07	1	12059168
	2-B15	2.530	PLUG, WRG HARN CONN (UNUSED CAV) (BLACK) (1-WAY M)	02	YY37	14	12059168
	2-A18	2.480	HARNESS, FWD LP WRG HARN EXTN (CPS) (INCLS 19, 42-43) ..	97	Y07 (T90) (EXPORT) ...	1	15329463
	2-A18	2.480	HARNESS, FWD LP WRG HARN EXTN (CPS) (INCLS 19, 42-43) ..	98-02	Y07-67 (T90) (EXPORT)	1	15329463
	2-B26	2.596	SOCKET, PARK LP (W/LEADS) (AC-DELCO #LS44)	97-98	Y (T90) (EXPORT)	2	12141388
	2-B26	2.596	SOCKET, PARK LP (W/LEADS) (AC-DELCO #LS44)	99-02	Y07-67 (T90) (EXPORT)	2	12141388
38.	2-C2	2.726	BRACKET, HDLP (FOR HEADLAMP DOOR)	97-02	Y	LH	16523679
	2-C2	2.726	BRACKET, HDLP (FOR HEADLAMP DOOR)	97-02	Y	RH	16523680
39.		8.929	WASHER, FL M6 5X18 8X1.5 SOFT STL FLCRB (HEADLAMP SHIM) (DOOR "UP AND DOWN" STOP BRKT)	97	....	2	11508927
		8.929	WASHER, PL, CD OR ZC (HEADLAMP SHIM) (DOOR "UP AND DOWN" STOP BRKT) . ..	98-00	... ...	2	120392
40.	2-C3	2.727	BULB, HDLP (LOW BEAM) (AC-DELCO #09441733)	97-02	Y (EXC T84 T85)	2	9441733
	2-C3	2.727	BULB, HDLP (HIGH BEAM) (AC-DELCO #9005)	97-02	Y (EXC T84, T85)	2	9441732
	2-C3	2.727	BULB, HDLP	97-02	Y (T84, T85) (EXPORT)	2	11515298

cardiagn.com

							1Y02-046
41.	2-A18	2.480	HARNESS, FWD LP WRG	97	Y (T96) (EXC T90)	1	12189881
	2-A18	2.480	HARNESS, FWD LP WRG	97	Y (EXC T96)	1	12189883
	2-A18	2.480	HARNESS, FWD LP WRG	98	Y (T96) (EXC JAG, T90)	1	12163322
	2-A18	2.480	HARNESS, FWD LP WRG	98	Y (EXC JAG, T96)	1	12163324
	2-A18	2.480	HARNESS, FWD LP WRG	98	Y (JAG, T96) (EXC JL4, T90)	1	12189515
	2-A18	2.480	HARNESS, FWD LP WRG	98	Y (JAG) (EXC JL4, T96)	1	12189517
	2-A18	2.480	HARNESS, FWD LP WRG	98	Y (JAG, JL4, T96) (EXC T90)	1	12189518
	2-A18	2.480	HARNESS, FWD LP WRG	98	Y (JAG, JL4) (EXC T96)	1	12189520
	2-A18	2.480	HARNESS, FWD LP WRG	99	Y07-67 (T96) (EXC JL4, T90)	1	12189973
	2-A18	2.480	HARNESS, FWD LP WRG	99	Y07-67 (EXC JL4, T90, T96)	1	12189974
	2-A18	2.480	HARNESS, FWD LP WRG	99	Y (JL4, T96) (EXC T90) .	1	12189976
	2-A18	2.480	HARNESS, FWD LP WRG	99	Y07-67 (JL4) (EXC T90, T96)	1	12189978
	2-A18	2.480	HARNESS, FWD LP WRG	99	Y37 (T96) (EXC JL4) ...	1	12189973
	2-A18	2.480	HARNESS, FWD LP WRG	99	Y37 (NV7) (EXC JL4, T96)	1	12189974
	2-A18	2.480	HARNESS, FWD LP WRG	00	Y07-67 (EXC JL4, T90)	1	15329403
	2-A18	2.480	HARNESS, FWD LP WRG	00	Y (JL4) (EXC T90)	1	15329406
	2-A18	2.480	HARNESS, FWD LP WRG	00	Y37 (EXC JL4)	1	15329403
	2-A18	2.480	HARNESS, FWD LP WRG (2ND DSN USED ON/AFTER VIN #15107689, (1ST DSN 10448116))	01	YY07-67 (JL4) (EXC T90) (2ND DES)	1	10310796
	2-A18	2.480	HARNESS, FWD LP WRG (2ND DSN USED ON/AFTER VIN #15107689, (1ST DSN 10448118))	01	YY07-67 (JL4, T90) (2ND DES)	1	10310798
	2-A18	2.480	HARNESS, FWD LP WRG (1ST DSN USED B/4 VIN #15107689, (2ND DSN 10310796))	01	YY07-67 (JL4) (EXC T90) (1ST DES)	1	10448116
	2-A18	2.480	HARNESS, FWD LP WRG (1ST DSN USED B/4 VIN #15107689, (2ND DSN 10310798))	01	YY07-67 (JL4, T90) (1ST DES)	1	10448118
	2-A18	2.480	HARNESS, FWD LP WRG	01-02	YY37	1	10310796
	2-A18	2.480	HARNESS, FWD LP WRG	01	YY37	1	10448116
	2-A18	2.480	HARNESS, FWD LP WRG	02	YY07-67 (EXC T90) ...	1	10310796
	2-A18	2.480	HARNESS, FWD LP WRG	97	Y (VD1) (EXPORT)	1	12189883
	2-A18	2.480	HARNESS, FWD LP WRG	97	Y (T90, VE1) (EXPORT)	1	12189884
	2-A18	2.480	HARNESS, FWD LP WRG	99	Y07-67 (T90) (EXC JL4) (EXPORT)	1	12189975
	2-A18	2.480	HARNESS, FWD LP WRG	99	Y07-67 (JL4, T90) (EXPORT)	1	12189978
	2-A18	2.480	HARNESS, FWD LP WRG	00	Y07-67 (T90) (EXC JL4) (EXPORT)	1	15329405
	2-A18	2.480	HARNESS, FWD LP WRG	00	Y07-67 (JL4, T90) (EXPORT)	1	15329408
	2-A18	2.480	HARNESS, FWD LP WRG	02	YY07-67 (T90) (EXPORT)	1	10310798
42.	2-B15	2.530	CONNECTOR, INLINE-TO FWD LP HARN (PART OF 37) (BLACK) (2-WAY F W/LEADS) (3.670) (AC-DELCO #PT374)	97-98	Y	1	12102747

cardiagn.com

				YY02-046		
2-B15	2.530	CONNECTOR, INLINE-TO FWD LP HARN (PART OF 37) (WHITE) (8-WAY F W/LEADS) (2.535) (AC-DELCO #PT444)	97-02	Y (EXC T90)	1	12117271
2-B15	2.530	CONNECTOR, INLINE-TO FWD LP HARN (PART OF 37) (BLACK) (10-WAY F) (W/LEADS) (AC-DELCO #PT588)	98-02	Y	1	12125676
2-B15	2.530	CONNECTOR, INLINE-TO FWD LP HARN (PART OF 37) (20-WAY F) (W/O LEADS)	98-00	Y	1	12160280
2-B15	2.530	CONNECTOR, INLINE-TO FWD LP HARN (PART OF 37) (BLACK) (2-WAY F W/LEADS) (3.670) (AC-DELCO #PT374)	99-00	Y07-67	1	12102747
2-B15	2.530	CONNECTOR, INLINE-TO FWD LP HARN (PART OF 37) (BLACK) (2-WAY F W/LEADS) (3.670) (AC-DELCO #PT374)	99-00	Y37 (TR9)	1	12102747
2-B15	2.530	CONNECTOR, INLINE-TO FWD LP HARN (PART OF 37) (1-WAY M) (W/LEAD) (BLACK) (AC-DELCO #PT1223)	00	Y	1	12085669
2-B15	2.530	CONNECTOR, INLINE-TO FWD LP HARN (PART OF 37) (BLACK) (2-WAY F W/LEADS) (2.383) (AC-DELCO #PT169)	01-02	Y	1	12101899
2-B15	2.530	CONNECTOR, INLINE-TO FWD LP HARN (PART OF 37) (BLACK) (2-WAY F W/LEADS) (3.670) (AC-DELCO #PT374)	01-02	Y	1	12102747
2-B15	2.530	CONNECTOR, INLINE-TO FWD LP HARN (PART OF 37) (10-WAY F) (13.100)	01-02	Y	1	15326842
2-B15	2.530	CONNECTOR, INLINE-TO FWD LP HARN (PART OF 37) (10-WAY M) (2.483)	01-02	Y	1	15326847
2-B15	2.530	CONNECTOR, INLINE-TO FWD LP HARN (PART OF 37)	01-02	YY67 (M30, CJ2, N37) (EXC T89)	1	15326286
2-B15	2.530	CONNECTOR, INLINE-TO FWD LP HARN (PART OF 37) (BLACK) (2-WAY F W/LEADS) (2.383) (AC-DELCO #PT169)	02	Y (MM6, M30)	1	12101899
2-B15	2.530	CONNECTOR, INLINE-TO FWD LP HARN (PART OF 37) (BLACK) (2-WAY F W/LEADS) (2.383) (AC-DELCO #PT169)	02	YY37	1	12101899
2-B15	2.530	CONNECTOR, INLINE-TO FWD LP HARN (16-WAY FEMALE GT-150.) (PART OF 37) (16 WAY FEMALE) (AC-DELCO #PT1[illegible]63)	01-02	YY67	1	15306410
2-B15	2.530	CONNECTOR, INLINE-TO FWD LP HARN (PART OF 37) (WHITE) (8-WAY F W/LEADS) (2.535) (AC-DELCO #PT444)	02	YY07-67 (T90) (EXPORT)	1	12117271

cardiagn.com

						1Y02–046	
43.	2–B15	2.530	CONNECTOR, GND–BUS BAR (PART OF 37) (1–WAY F, W/LEADS) (2.535) (AC–DELCO #PT230)	98–02	YY67	1	12102561
	2–B15	2.530	CONNECTOR, GND–BUS BAR (PART OF 37) (80–WAY F) (USE TERM 12084912 18 GA & TERM 12084913 20 GA) (3.670)	99–00	Y	2	12167308
	2–B15	2.530	CONNECTOR, GND–BUS BAR (PART OF 37) (1–WAY F) (W/LEADS) (M/P 630 SELF LK) (9.778) (AC–DELCO #PT798) ...	01–02	YY07	1	12167133
	2–B15	2.530	CONNECTOR, GND–BUS BAR (PART OF 37) (LOWER) (12–WAY FEMALE) (W/O LEADS)	01–02	YY67 (AG2, UZ6)	1	15305294
	2–B15	2.530	CONNECTOR, GND–BUS BAR (MATES WITH AND ACTS AS A CVR FOR 15305291) (PART OF 37)	97–02	Y	1	15305292
	2–B15	2.530	CONNECTOR, GND–BUS BAR (USED AS COVER FOR 12–WAY BUS BAR 15305294.) (PART OF 37) (THIS IS A MALE CAP/BAR WHICH MATES TO 12–WAY FEMALE)	97–02	Y	2	15305300
	2–B15	2.530	CONNECTOR, GND–BUS BAR (12 WAY F GT–280, W/O UPR CONN/CVR, W/0 LEADS, MATES W/15305292 CONN/CVR) (PART OF 37) (12–WAY F)	97–02	Y	1	15305291
	2–B15	2.530	CONNECTOR, GND–BUS BAR (12–WAY FEMALE BUS BAR. OFTEN USED W/15305300 UPR (COVER) .) (PART OF 37) (LOWER) (12–WAY FEMALE) (W/O LEADS)	97–02	Y	2	15305294
	2–B15	2.530	CONNECTOR, GND–BUS BAR (12–WAY FEMALE BUS BAR. OFTEN USED W/15305300 UPR (COVER)) (PART OF 37) (LOWER) (12–WAY FEMALE) (W/O LEADS)	02	YY (M30, CJ2, N37) (EXC T89)	2	15305294
44.	2–B25	2.587	SPRING, PARK & T/SIG LP	97–02	Y	2	10291802
45.	2–C3	2.727	BULB, FRT FOG LP (AC–DELCO #899)	00–02	Y (T96) (EXC T90)	2	16525392
	2–C3	2.727	BULB, FRT FOG LP (AC–DELCO #L893)	97–99	Y (T96) (EXC T90) (EXPORT)	2	9442881
	2–C3	2.727	BULB, FRT FOG LP (AC–DELCO #H3)	97–02	Y (T90, T96) (EXPORT)	2	11513798
46.	2–C4	2.755	MODULE, HDLP OPG DR ACTR CONT (RT SI ONLY)	97–02	Y	1	16523917
47.	2–B28	2.725	LENS, HDLP	97–02	Y (EXC T84, T85)	LH	16523785
	2–B28	2.725	LENS, HDLP	97–02	Y (EXC T84, T85)	RH	16523786
	2–B28	2.725	LENS, HDLP	97–02	Y (T85) (EXPORT)	LH	16524061
	2–B28	2.725	LENS, HDLP	97–02	Y (T85) (EXPORT)	RH	16524062
	2–B28	2.725	LENS, HDLP	97–02	Y (T84) (EXPORT)	LH	16524063
	2–B28	2.725	LENS, HDLP	97–02	Y (T84) (EXPORT)	RH	16524064
48.	2–C3	2.729	CLIP, HDLP BZL (2.662)	97–02	Y	2	10282366

cardiagn.com

							1Y02-046
49.	2-C4	2.760	ACTUATOR, HDLP (AC-DELCO #16523673)	97-99	Y (EXC T84, T85)	LH	16523673
	2-C4	2.760	ACTUATOR, HDLP (AC-DELCO #16523674)	97-99	Y (EXC T84, T85)	RH	16523674
	2-C4	2.760	ACTUATOR, HDLP (AC-DELCO #16530235)	00-02	Y (EXC T84, T85)	LH	16530235
	2-C4	2.760	ACTUATOR, HDLP (AC-DELCO #16530236)	00-02	Y (EXC T84, T85)	RH	16530236
	2-C4	2.760	CONNECTOR, MOT-HDLP OPG DR ACTR (5-WAY F) (W/LEADS) (2.530) (AC-DELCO #PT1015) ..	97-02	Y	2	15305874
	2-C4	2.760	ACTUATOR, HDLP (AC-DELCO #16524153)	97-99	Y (T84, T85) (EXPORT)	LH	16524153
	2-C4	2.760	ACTUATOR, HDLP (AC-DELCO #16524154)	97-99	Y (T84, T85) (EXPORT)	RH	16524154
	2-C4	2.760	ACTUATOR, HDLP (AC-DELCO #16530237)	00-02	Y (T84, T85) (EXPORT)	LH	16530237
	2-C4	2.760	ACTUATOR, HDLP (AC-DELCO #16530238)	00-02	Y (T84, T85) (EXPORT)	RH	16530238
50.	2-B25	2.587	RETAINER, PARK & FRT SI MKR & T/SIG LP	97-02	Y	2	10401202

RPO DEFINITIONS
AG2 – ADJUSTER,SEAT,6-WAY POWER,SPLIT BENCH,PASSENGER
CJ2 – HVAC SYSTEM AIR CONDITIONER FRT, AUTO TEMP CONT, AUX TEMP CONT
JAG – BRAKE PROVISIONS ABS LOCATION
JL4 – CONTROL ACTIVE BRAKE
MM6 – TRANSMISSION MAN 6 SPD, BORG WARNER, 85MM, 1ST 2.66, 6TH 0.50, O/D
M30 – TRANSMISSION,AUTOMATIC 4 SPEED,4L60E,ELECTRONIC
NV7 – STEERING,POWER,VARIABLE EFFORT
N37 – STEERING COLUMN,TILT AND TELESCOPING
TR9 – LAMP GROUP,COURTESY
T82 – HEADLAMPS,AUTOMATIC ON/OFF CONTROL
T84 – HEADLAMPS,RH RULE OF THE ROAD,RECTANGULAR(MARKED E)(EXPORT)
T85 – HEADLAMPS,LH RULE OF THE ROAD,RECTANGULAR(MARKED E)(EXPORT)
T89 – LAMP,TAIL AND STOP(EXPORT)
T90 – LAMP,SIGNALING AND MARKER(EXPORT)
T96 – LAMP,FRONT FOG
UZ6 – SPEAKER SYSTEM 6, QUAD FRT DR MTD, DUAL QTR MTD
VD1 – PROVISION OPTIONS,EUROPE(EXPORT)
VE1 – PROVISION OPTIONS,JAPAN(EXPORT)
Z49 – MANDATORY CANADIAN BASE EQUIPMENT MODIFICATIONS(CANADIAN)

cardiagn.com

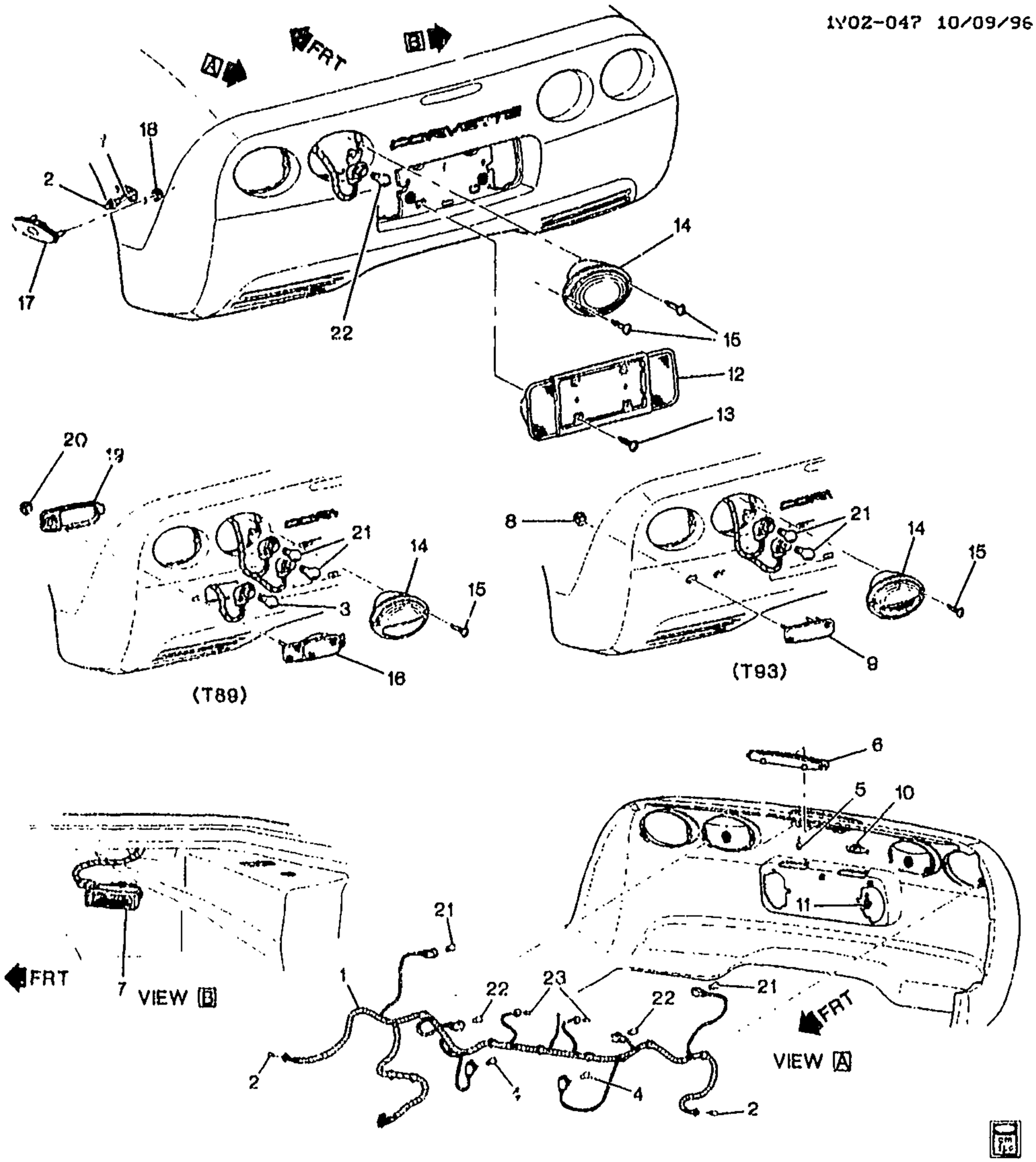

1Y02-047

1997-2002 Y LAMPS/REAR

1.	2-N24	13.090	HARNESS, BODY RR WRG	97-02	Y07 (EXC T89, T93)	1	12130411
	2-N24	13.090	HARNESS, BODY RR WRG	98-99	Y67 (EXC T89, T93)	1	12189532
	2-N24	13.090	HARNESS, BODY RR WRG	99	Y37 (EXC T89, T93)	1	12189532
	2-N24	13.090	HARNESS, BODY RR WRG	00-02	Y07 (T93) (EXC T89) ...	1	12189885
	2-N24	13.090	HARNESS, BODY RR WRG	00-02	Y37-67 (EXC T89, T93)	1	12189532

cardiagn.com

							1Y02-047
	2-N24	13.090	HARNESS, BODY RR WRG	00-02	Y37-67 (T93) (EXC T89)	1	12189534
	2-N24	13.090	HARNESS, BODY RR WRG	97-01	Y07 (T89) (EXC T93) (EXPORT)	1	12130413
	2-N24	13.090	HARNESS, BODY RR WRG	97-99	Y07 (T93) (EXC T89) (EXPORT)	1	12189885
	2-N24	13.090	HARNESS, BODY RR WRG	98	Y67 (T89) (EXC T93) (EXPORT)	1	12189533
	2-N24	13.090	HARNESS, BODY RR WRG	98-99	Y67 (T93) (EXC T89) (EXPORT)	1	12189534
	2-N24	13.090	HARNESS, BODY RR WRG	99-02	Y37-67 (T89) (EXC T93) (EXPORT)	1	12189533
	2-N24	13.090	HARNESS, BODY RR WRG	99	Y37 (T93) (EXC T89) (EXPORT)	1	12189534
2.		8.091	TRADE#194, 12V, 2CP (RR SI MKR LP) (AC-DELCO #L194) ...	97-02	(EXC T89, T93)	2	9421330
		8.991	BULB (TRADE #WEW) (E.C.E.) (RR SI MKR LP) (AC-DELCO #W3W)	97-02	(T89, T93)	2	9442445
	2-B25	2.575	SOCKET, RR SI MKR LP (W/LEADS) (2.596) (AC-DELCO #LS44)	97-02	Y	2	12141388
3.		8.091	BULB, (TRADE # P21W) (RR FOG LP)	97-02	.....	2	9442442
	2-B27	2.694	SOCKET, RR FOG LP (2.535) (AC-DELCO #LS39)	97-02	Y (T89) (EXC T93) (EXPORT)	2	12141301
4.		8.991	BULB, 12/14V 32-2 C .P. (B/U LP) (AC-DELCO #L2057)	97-02	(EXC T89)	2	9438848
		8.991	BULB, (TRADE # P21W) (B/U LP)	97-02	(T89)	2	9442442
	2-B27	2.697	SOCKET, B/U LP (2.694) (AC-DELCO #LS49)	97-02	Y (EXC T89)	2	12141493
	2-B27	2.697	SOCKET, B/U LP (2.535) (AC-DELCO #LS39)	97-02	Y (T89) (EXC T93) (EXPORT)	2	12141301
5.		8.977	BOLT, HEX W/LG FL WA M4.2X1.41X16 TAP POR (HIGH MT S/LP)	97-02	.....	2	11515730
6.	2-B26	2.679	LAMP, HIGH MT STOP	97-02	Y	1	10253893
	2-B27	2.694	CONNECTOR, INLINE-TO HIGH MT S/LP (BLACK) (2-WAY F W/LEADS) (2.383) (AC-DELCO #PT169)	97-02	Y	1	12101899
	2-B27	2.694	SOCKET, STOP & T/LP (AC-DELCO #LS15)	97-02	Y (EXC T89, T93)	4	12083689
	2-B27	2.694	SOCKET, STOP & T/LP (AC-DELCO #LS40)	97-02	Y	4	12141302
7.	2-N22	9.988	LAMP, CARGO	97-98	Y	2	10258647
	2-N22	9.988	LAMP, CARGO	99-00	Y07-67	2	10258647
	2-N22	9.988	LAMP, CARGO	99-00	Y37 (TR9)	2	10258647
	2-N22	9.988	LAMP, CARGO	01-02	Y	2	10258647
		8.991	SOCKET, WEDGE BASE INTERIOR LAMP .50X .63X.25 (BULB-CARGO LP) (AC-DELCO #25085970)	97-02	.....	2	25085970
8.		8.921	NUT, STAMPED FITS 6.3 STUD-TYPE B SELF THD STL PC (R/END FASCIA REFL)	97-02	.....	4	11502553
9.	2-B27	2.689	REFLECTOR, R/END FASCIA ...	97-02	Y (T93) (EXPORT)	2	10269317
10.	2-B28	2.700	LAMP, RR LIC PLT	97-02	Y	2	16519966

cardiagn.com

	2-B28	2.714	SOCKET, RR LIC PLT LP (W/LEADS) (2.596) (AC-DELCO #LS44)	97-02	Y	2	12141388
11.	2-B28	2.708	BOLT, RR LIC PLT LP (10.252)	97-02	Y	4	10400761
12.	2-B27	2.697	LAMP, B/U (W/RR LIC PLT PKT) (FOR EXP SEE GRP 7 RR BPR)	97-02	Y (EXC T89)	1	16523537
13.		8.906	SCREW, RD WA HD, 4.2X1.41X16, NIOR, GM6138M (B/U & RR LIC PLT LP)	97-02		4	11515498
14.	2-B26	2.679	LAMP, TAIL (RR STOP & TURN LP) (ALL RED)	97-02	Y (EXC T89, T93)	LH	16523533
	2-B26	2.679	LAMP, TAIL (RR STOP & TURN LP) (ALL RED)	97-02	Y (EXC T89, T93)	RH	16523534
	2-C5	2.892	SOCKET, RR T/SIG LP (2.535) (AC-DELCO #LS39)	97-02	Y	4	12141301
	2-B27	2.697	SOCKET, B/U LP (2.694) (AC-DELCO #LS49)	97-02	Y (EXC T89)	2	12141493
	2-B26	2.679	LAMP, TAIL (RR STOP & AMBER TURN LP)	97-02	Y (T89) (EXPORT)	LH	10253891
	2-B26	2.679	LAMP, TAIL (RR STOP & AMBER TURN LP)	97-02	Y (T89) (EXPORT)	RH	10253892
	2-B26	2.679	LAMP, TAIL (RR STOP & AMBER TURN LP)	97-02	Y (T93) (EXPORT)	LH	10299360
	2-B26	2.679	LAMP, TAIL (RR STOP & AMBER TURN LP)	97-02	Y (T93) (EXPORT)	RH	10299361
	2-B27	2.697	LAMP, B/U & TAIL (RR STOP & B/U LP)	97-02	Y (T89) (EXPORT)	LH	10270419
	2-B26	2.679	LAMP, B/U & TAIL (RR STOP & B/U LP) (2.697)	97-02	Y (T89) (EXPORT)	LH	10270419
	2-B27	2.697	LAMP, B/U & TAIL (RR STOP & B/U LP)	97-02	Y (T89) (EXPORT)	RH	10270420
	2-B26	2.679	LAMP, B/U & TAIL (RR STOP & B/U LP) (2.697)	97-02	Y (T89) (EXPORT)	RH	10270420
	2-B27	2.697	SOCKET, B/U LP (2.535) (AC-DELCO #LS39)	97-02	Y (T89) (EXC T93) (EXPORT)	2	12141301
15.		8.903	BOLT, SCR RD, M4.2X1.4X30, 8.38 OD, 6010M (T/LP) (12.183)	97-02		8	20374961
16.	2-B26	2.679	LAMP KIT, RR FOG	97-02	Y (T89) (EXPORT)	LH	12533323
	2-B26	2.679	LAMP KIT, RR FOG	97-01	Y (T89) (EXPORT)	RH	12533324
	2-B27	2.694	SOCKET, RR FOG LP (2.535) (AC-DELCO #LS39)	97-02	Y (T89) (EXC T93) (EXPORT)	2	12141301
17.	2-B25	2.575	LAMP, RR SI MKR (RED LENS)	97-02	Y (EXC T89)	2	16524722
	2-B25	2.575	LAMP, RR SI MKR (AMBER LENS)	97-02	Y (T89) (EXPORT)	2	5978259
18.		8.921	NUT, STAMPED FITS 6.3 STUD-TYPE B SELF THD STL PC (RR SI MKR LP)	97-02		4	11502553
19.		N.S.	BEZEL, RR FOG LP				
20.		8.921	NUT, STAMPED FITS 6.3 STUD-TYPE B SELF THD STL PC (RR FOG LP BZL)	97-02		2	11502553
21.		8.991	BULB, TRADE #P21 (BRAKE & TAIL LIGHT)	97-02		4	9442443
22.		8.991	BULB, 12 VOLTS, 2.1 AMPS, 32 CP, TRADE NO.3057 (T/LP) (EXC EXP) (AC-DELCO #L3057)	97-02	(EXC T89, T93)	4	9441839
		8.991	BULB, (TRADE # P21W) (T/LP RR TURN) (W/T89, T93 EXP)	97-02		AR	9442442

cardiagn.com

							TY02-047
	2-B27	2.694	SOCKET, STOP & T/LP (AC-DELCO #LS15)	97-02	Y (EXC T89, T93)	4	12083689
	2-B27	2.694	SOCKET, STOP & T/LP (AC-DELCO #LS40)	97-02	Y	4	12141302
23.		8.991	TRADE#194, 12V, 2CP (RR LIC PLT LP) (EXC T89, T93 EXP) (AC-DELCO #L194)	97-02	.....	2	9421330
		8.991	BULB (TRADE #WEW) (E.C.E.) (RR LIC PLT LP) (W/T89, T93 EXP) (AC-DELCO #W3W)	97-02	.....	2	9442445
	2-B28	2.714	SOCKET, RR LIC PLT LP (W/LEADS) (2.596) (AC-DELCO #LS44)	97-02	Y	2	12141388

*PO DEFINITIONS
TR9 – LAMP GROUP,COURTESY
T89 – LAMP,TAIL AND STOP(EXPORT)
T93 – LAMP,TAIL AND STOP(SPECIAL)

cardiagn.com

ILLUSTRATION INDEX

	TITLE	GRID
1997–1998	Y FUEL SUPPLY SYSTEM	2–I4
1999	Y FUEL SUPPLY SYSTEM	2–I9
2000	Y FUEL SUPPLY SYSTEM	2–I14
2001–2002	Y FUEL SUPPLY SYSTEM	2–I19
1997–1998	Y FUEL INJECTOR RAIL SFI (LS1/5.7G)	2–I24
1999–2002	Y FUEL INJECTOR RAIL SFI (LS1/5.7G)	2–I26
2001–2002	Y FUEL INJECTOR RAIL SFI (LS6/5.7S)	2–I26
1997–2002	Y THROTTLE BODY (MODEL 118)(LS1/5.7G)	2–J2
2001–2002	Y THROTTLE BODY (MODEL 118)(LS6/5.7S)	2–J2
1997–1999	Y A.I.R. PUMP & RELATED PARTS	2–J4
2000–2002	Y A.I.R. PUMP & RELATED PARTS PART 1 HOSES & PIPES	2–J7
2000–2002	Y A.I.R. PUMP & RELATED PARTS PART 2 PUMP & MOUNTING	2–J9
1997–1998	Y AIR INTAKE SYSTEM (M30)	2–J12
1997–1998	Y AIR INTAKE SYSTEM (MM6,EXC B4H)	2–J12
1997–1998	Y AIR INTAKE SYSTEM (EXPORT)(MM6,B4H)	2–J15
1999–2000	Y AIR INTAKE SYSTEM (EXPORT)(MM6,B4H)	2–J18
1999–2000	Y AIR INTAKE SYSTEM (M30)	2–J21
1999–2000	Y AIR INTAKE SYSTEM (MM6,EXC B4H)	2–J21
2001–2002	Y AIR INTAKE SYSTEM (EXPORT)(MM6,B4H)	2–J24
2001–2002	Y AIR INTAKE SYSTEM (EXC B4H)	2–K2
1997–2002	Y ACCELERATOR CONTROL–V8	2–K5
1997–2002	Y CRUISE CONTROL	2–K7
1997–2002	Y P.C.M. MODULE & WIRING HARNESS	2–K14
1997	Y EXHAUST SYSTEM	2–K17
1998–2002	Y EXHAUST SYSTEM	2–K20

cardiagn.com

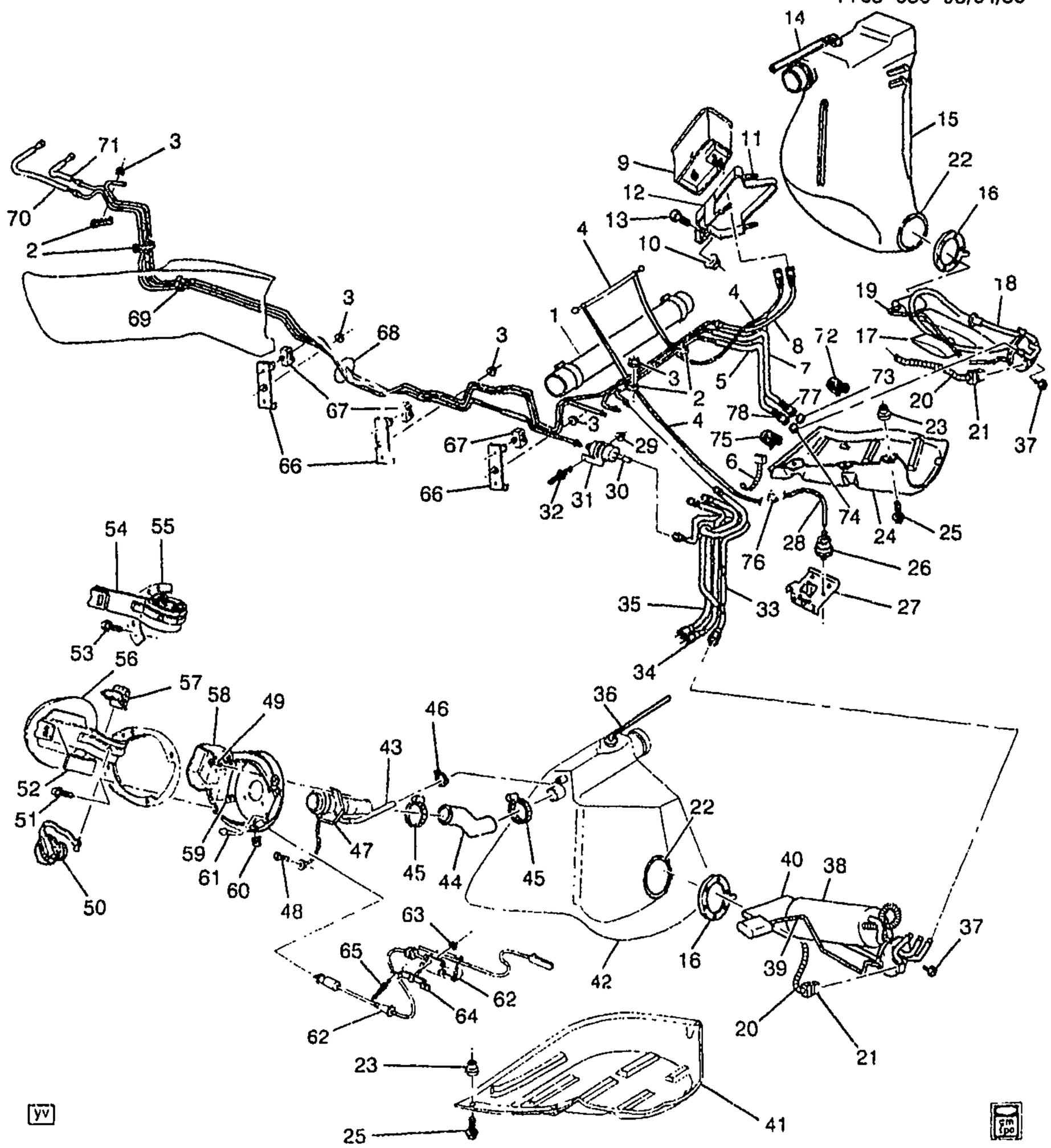

1Y03-033

1997-1998 Y FUEL SUPPLY SYSTEM

1.	2-D11	3.163	HOSE, FUEL FEED (CROSSOVER 2.75 DIAMETER) . .	97-98 Y	1	10292053
2.	2-D11	3.162	CLIP, FUEL FRT PIPE (PART OF 68)	97-98 Y	4	10276208

© 2001 GENERAL MOTORS SERVICE PARTS OPERATIONS-CHEVROLET-15Y

cardiagn.com

3.		8.917	NUT, HEX W/CON W/A 6X1X5.5 16-OD ZP 9 (FUEL FEED & RTN PIPE RET) (HOLDS CLIP TO STUD)	97-98		6	11517293
4.	2-D9	3.120	HOSE, EVAP EMIS RR	97-98	Y	1	10298122
5.	2-D11	3.163	PIPE, FUEL SDR FUEL FEED (PIPE JET PUMP TO LH TK) (INCLS 74, 75, 78)	97-98	Y	1	10404930
		N.S.	CONNECTOR, FUEL FEED PIPE				
6.		8.965	STRAP, ADJ TIE (F/INJN FUEL FEED HOSE) (AC-DELCO #12337820)	97-98		5	12337820
7.	2-D11	3.163	HOSE, FUEL FEED RR C/OVR (INCLS 72, 73, 77)	97-98	Y	1	10404929
8.	2-D10	3.145	HOSE, EVAP EMIS CNSTR PURGE (3.107)	97-98	Y	1	10276212
9.	2-D10	3.130	CANISTER, EVAP EMIS (AC-DELCO #215-182)	97-98	Y (LS1)	1	17113335
10.		8.917	NUT, HEX W/CON WA 6X1X5.5 16-OD ZP 9 (EVAP EMIS CNSTR BRKT)	97-98		2	11517293
11.		N.S.	STUD, EVAP EMIS CNSTR BRKT			2	
12.	2-D10	3.130	BRACKET, EVAP EMIS CNSTR	97-98	Y	1	10287787
13.		8.900	BOLT, HFH M6X1X25, 9.8 7114M, 14.2OD HDR PT FULL THD (EVAP EMIS CNSTR BRKT)	97-98		1	11516424
		N.S.	NUT, EVAP EMIS CNSTR BRKT BOLT			1	
14.	2-D9	3.120	HOSE, F/TNK VENT VLV (PART OF 15)	97-98	Y	1	10276201
15.	2-D8	3.001	TANK, FUEL (INCLS 14, 16-19, 22, 37) (INCLS HOSES, MODULES, TANKS, BOLTS, SEAL)	97-98	Y	RH	10292054
16.		N.S.	GASKET, FUEL SDR (PART OF 15, 42)				
17.		N.S.	STRAINER, FUEL PMP FUEL (PART OF 15)			2	
18.	2-D8	3.001	TANK KIT, FUEL (PART OF 15)	97-98	Y	RH	12458238
19.	2-D9	3.107	MODULE KIT, F/TNK F/PMP (PART OF 15) (AC-DELCO #MU1007)	97-98	Y	RH	88896043
	2-D28	3.000	MODULE KIT, F/TNK F/PMP (PART OF 15) (3.107) (AC-DELCO #MU1007)	97-98	Y	RH	88896043
20.	2-A18	2.480	HARNESS, F/PMP WRG (INCLS 21)	97-98	Y	1	12130416
21.	2-D9	3.107	CONNECTOR, SEN-FUEL LVL (FUEL PUMP WRG HARN CONN TO FUEL TK) (PART OF 20) (4-WAY F) (W/LEADS) (2.383) (AC-DELCO #PT757)	97-98	Y	2	12126487
22.	2-D9	3.112	SEAL, FUEL SDR (PART OF 15, 42) (AC-DELCO #G4)	97-98	Y	2	12458250
23.	2-D8	3.023	NUT, F/TNK STRP (3.015)	97-98	Y	4	10281493
24.	2-D8	3.015	STRAP, F/TNK SHLD	97-98	Y	RH	10291216

cardiagn.com

							TY03-033
25.		8.900	BOLT-HEX, M8X1.25X30, 22 THD, 24MM OD, 9.8, 7114M (F/TNK STRP)	97-98		10	11516594
26.	2-D9	3.120	VENT, F/TNK	97-98	Y	1	10298121
27.	2-N24	12.986	BRACE, R/CMPT PNL (127.9X126.3X66.5)	97-98	Y	LH	10263983
	2-N24	12.986	BRACE, R/CMPT PNL (127.9X126.3X73.1)	97-98	Y	RH	10299078
28.	2-D9	3.120	HOSE, EVAP EMIS	97-98	Y	1	10298123
29.		8.917	NUT, HEX W/CON WA 6X1X5.5 16-OD ZP 9 (FUEL FLTR BRKT)	97-98		1	11517293
30.	2-D28	3.890	FILTER, FUEL (INCLS 31) (W/BRKT) (AC-DELCO #GF820)	97-98	Y (LS1)	1	10287788
31.	2-D28	3.890	BRACKET, FUEL FLTR (PART OF 30)	97-98	Y	1	10253390
32.	2-D28	3.890	STUD, FUEL FLTR BRKT (2.559)	97-98	Y	1	10278878
33.	2-D11	3.163	HOSE, FUEL FEED RR (W/CHECK VALVE)	97-98	Y	1	10413424
34.	2-D11	3.163	HOSE, FUEL RTN RR	97-98	Y	1	10404927
35.	2-D11	3.163	HOSE, FUEL SDR FUEL FEED	97-98	Y	1	10404931
		N.S.	CONNECTOR, FUEL FEED PIPE				
36.	2-D9	3.120	HOSE, F/TNK VENT VLV (PART OF 42)	97-98	Y	1	10276201
37.		N.S.	BOLT, FUEL SDR (PART OF 15)				
38.	2-D8	3.001	TANK KIT, FUEL (PART OF 42)	97-98	Y	LH	12456239
39.		DISCON	MODULE, F/TNK F/PMP (PART OF 42)	97-98	Y	LH	12455734
		DISCON	MODULE, F/TNK F/PMP (PART OF 42) (3.107)	97-98	Y	LH	12455734
	2-D9	3.107	MODULE, F/TNK F/PMP (PART OF 42) (AC-DELCO #MU245)	97-98	Y	LH	12458243
	2-D28	3.900	MODULE, F/TNK F/PMP (PART OF 42) (3.107) (AC-DELCO #MU245)	97-98	Y	LH	12458243
40.	2-D9	3.110	STRAINER, F/PMP FUEL (PART OF 42) (3.107)	97-98	Y	LH	12533419
	2-D9	3.110	STRAINER KIT, FUEL (PART OF 42) (AC-DELCO #TS1004)	97-98	Y	LH	12458245
41.	2-D8	3.015	STRAP, F/TNK SHLD	97-98	Y	LH	10403525
42.	2-D8	3.001	TANK, FUEL (INCLS 16, 22, 36, 38-40, 43-44) (INCLS HOSES, MODULES, TANK, SEAL, STRAINER)	97-98	Y	LH	10410831
43.	2-D9	3.120	HOSE, F/TNK VENT (PART OF 42)	97-98	Y	1	10292057
44.	2-D8	3.003	HOSE, F/TNK FIL (PART OF 42)	97-98	Y	LH	10404104
45.		8.948	CLAMP, 28.6-86.2 DIA WORM GEAR (FUEL FEED HOSE) (AC-DELCO #12338017)	97-98		1	12338017
46.	2-D9	3.120	CLAMP, F/TNK FIL VENT HOSE (2.75 DIA) (3.417)	97-98	Y	1	10039976
47.	2-D9	3.120	PIPE, F/TNK FIL VENT	97-98	Y	1	10417554
48.		8.977	SCREW, HEX W/FL WA TAP 6.3X1.81X16 17- OD AB-POINT PZOR BLK (F/TNK FIL PIPE GND)	97-98		1	11509371
49.		8.977	BOLT, SCR HEX W/FLAT WA 12 DIA TYPE AB (F/TNK FIL VENT PIPE)	97-98		3	11509374

cardiagn.com

50.	2–D8	3.028	CAP, F/TNK FIL (W/HDL) (AC–DELCO #22616286)	97–98	Y	1	22616286
51.		8.977	SCREW, HEX W/FL WA M4.2X2.25X20 TAP POR (F/TNK FIL PIPE HSG)	97–98		5	11508443
52.		N.S.	TAPE, F/TNK FIL DR BLACKOUT			1	
53.		8.977	BOLT–SCREW, M4.2X1.41X13, 5.4 THD, 12.5 OD, GM6172M, GM6138M (F/TNK FIL DR HGE)	97–98		2	15714277
54.	2–N24	12.945	BUMPER, F/TNK FIL DR HGE (PART OF 56) (10.263)	97–98	Y	1	10276643
55.		N.S.	HINGE, F/TNK FIL DR (PART OF 56)				
56.	2–N24	12.945	DOOR, F/TNK FIL (SMC DR W/STEEL HGE) (INCLS 54–55)	97–98	Y	1	10429498
57.	2–D8	3.028	HOLDER, F/TNK FIL CAP	97–98	Y	1	10234784
58.	2–D8	3.003	HOUSING, F/TNK FIL PIPE (POCKET) (INCLS 60–61)	97–98	Y	1	10401497
59.	2–N24	12.945	NUT, F/TNK FIL DR LK ACTR (TO PCKT. POSN #1) (M8X1.0X4.3) (HEX)	97–98	Y	1	3537631
60.		8.921	NUT, U–SHAPED, M4.2X1.41 THD, PZOR, PNL 3.2–6.35, 14MM WIDE, 19MM LNG, C TO E 9 (F/TNK FIL PIPE HSG) (PART OF 58)	97–98		5	11509755
61.	2–N24	12.945	BUMPER, F/TNK FIL DR (PART OF 58)	97–98	Y	2	3547884
62.	2–N24	12.945	ACTUATOR, F/TNK FIL DR LK (INCLS FUEL DOOR RELEASE LEVER)	97–98	Y	1	10275633
63.		8.917	NUT, HEX W/CON WA 6X1X5.5 16–OD ZP 9 (F/TNK FIL DR LK ACTR) (POSN #2)	97–98		1	11517293
64.	2–N24	12.945	BRACKET, F/TNK FIL DR LK ACTR	97–98	Y	1	10280943
65.		N.S.	RIVET, F/TNK FIL DR LK ACTR BRKT			2	
66.	2–D11	3.162	RETAINER, FUEL FEED & RTN FRT PIPE (PART OF 68)	97–98	Y	3	10276219
67.	2–D11	3.162	CLIP, FUEL PIPE (PART OF 68)	97–98	Y	3	10281327
68.	2–D11	3.163	PIPE, FUEL FEED & RTN (INCLS 2, 66–67, 69)	97–98	Y	1	10276216
69.	2–D11	3.162	CLIP, FUEL FEED & RTN PIPE (PART OF 68)	97–98	Y	1	10288898
70.	2–D11	3.163	HOSE, FUEL FEED FRT	97–98	Y	1	10279630
71.	2–D11	3.163	HOSE, FUEL RTN FRT (JMPR)	97–98	Y	1	10279629
72.	2–D11	3.162	RETAINER, FUEL RTN PIPE FTG (PART OF 7) (5/16") (7.9MM) (STAINLESS STEEL)	97–98	Y	1	12530144
73.	2–D11	3.163	CAP, FUEL RTN PIPE (PART OF 7)	97–98	Y	1	10254647
74.	2–D11	3.163	CAP, FUEL FEED PIPE (PART OF 5)	97–98	Y	1	10254646
75.	2–D11	3.162	RETAINER, FUEL FEED PIPE FTG (PART OF 5) (3/8") (9.53MM) (STAINLESS STEEL)	97–98	Y	1	12530143

cardiagn.com

76.	8.948	CLAMP, SPRING BAND HOSE (M16X1) (EVAP EMIS RR HOSE) .	97–98	.....	1	11516255
77.	N.S.	FITTING, FUEL RTN RR PIPE (FUEL RTN RR) (PART OF 7)		.....	1	
78.	N.S.	FITTING, FUEL FEED FRT PIPE (FUEL FEED) (PART OF 5)		.....	1	

RPO DEFINITIONS

LS1 – ENGINE GAS, 8 CYL, 5.7L, SFI, ALUMINUM ENGINE

cardiagn.com

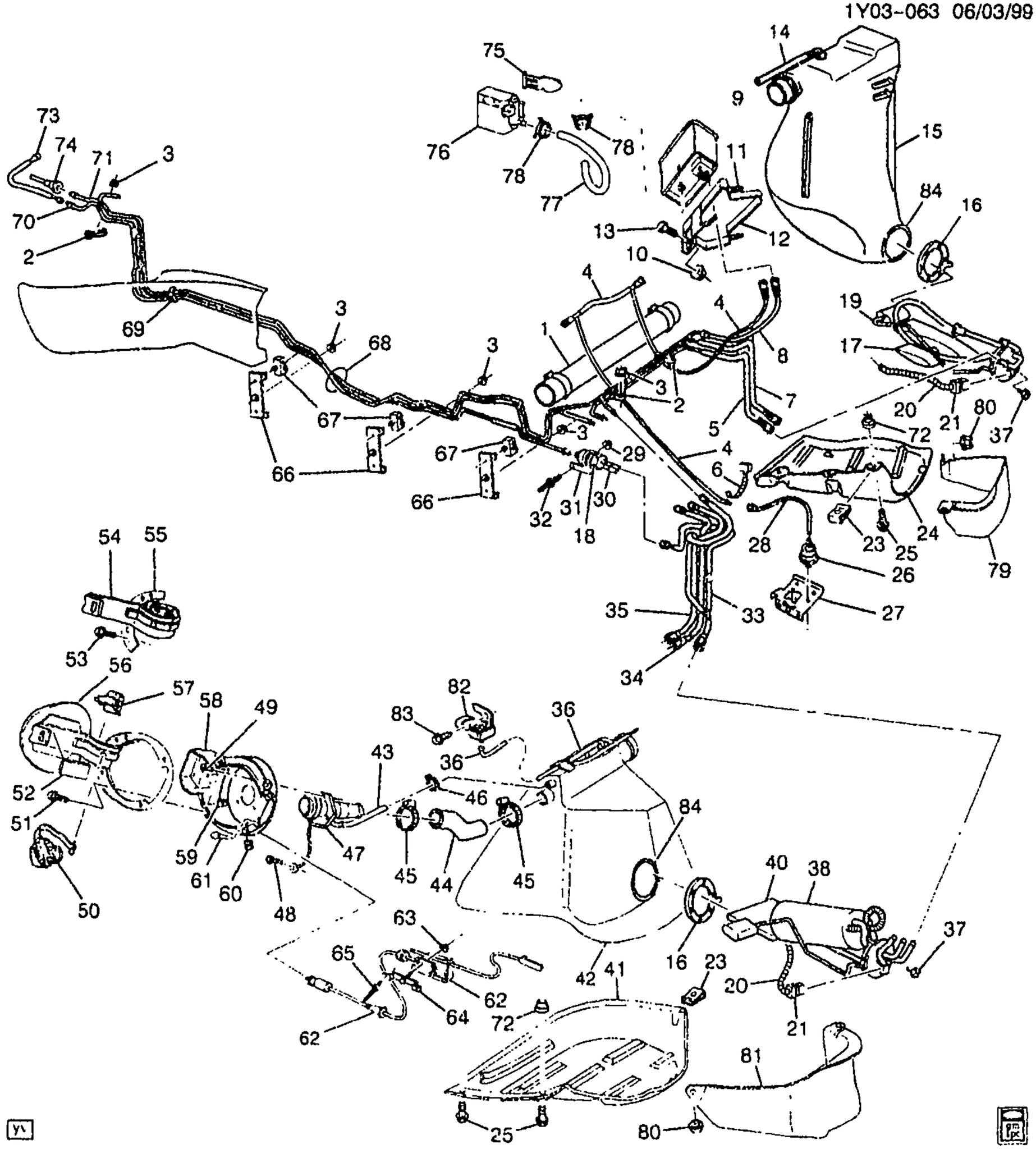

1Y03-063

1999 Y FUEL SUPPLY SYSTEM

1.	2-D11	3.163	HOSE, FUEL FEED	99 Y	1	10299108
2.	2-D11	3.162	CLIP, FUEL FRT PIPE (PART OF 68)	99 Y	3	10276208

cardiagn.com

3.		8.917	NUT, HEX W/CON WA 6X1X5.5 16-OD ZP 9 (FUEL FEED & RTN PIPE RET) (HOLDS CLIP TO STUD)	99		6	11517293
4.	2-D9	3.120	HOSE, EVAP EMIS RR	99	Y	1	10299144
5.	2-D11	3.163	PIPE, AUX FUEL RTN RR	99	Y	1	10448901
6.		8.965	STRAP, ADJ TIE (F/INJN FUEL FEED HOSE) (AC-DELCO #12337820)	99		5	12337820
7.	2-D11	3.163	PIPE, AUX FUEL FEED RR	99	Y	1	10448900
8.	2-D10	3.145	HOSE, EVAP EMIS CNSTR PURGE (3.107)	99	Y	1	10276212
9.	2-D10	3.130	CANISTER, EVAP EMIS (AC-DELCO #215-176)	99	Y (LS1)	1	17113327
10.		8.917	NUT, HEX W/CON WA 6X1X5.5 16-OD ZP 9 (EVAP EMIS CNSTR BRKT)	99		2	11517293
11.		N.S.	STUD, EVAP EMIS CNSTR BRKT (PART OF 12)			2	
12.	2-D10	3.130	BRACKET, EVAP EMIS CNSTR (INCLS 11, 13)	99	Y	1	10287787
13.		8.900	BOLT, METRIC HEX FLG HD (M6X1X30) (POR 9.8) (EVAP EMIS CNSTR BRKT) (PART OF 12)	99		1	11514008
14.		N.S.	HOSE, F/TNK VENT VLV			RH	
15.	2-D8	3.001	TANK KIT, FUEL	99	Y	RH	12458240
16.		N.S.	GASKET, FUEL SDR				
17.		N.S.	STRAINER KIT, FUEL (RH TANK)	99			
18.		N.S.	REGULATOR, FUEL PRESS (PART OF 30)				
19.	2-D9	3.107	MODULE KIT, F/TNK F/PMP (INCLS GSKT) (AC-DELCO #MU1007)	99	Y	RH	88896043
	2-D28	3.900	MODULE KIT, F/TNK F/PMP (INCLS GSKT) (3.107) (AC-DELCO #MU1007)	99	Y	RH	88896043
20.	2-A18	2.480	HARNESS, F/PMP WRG (INCLS 21)	99	Y	1	12189531
21.	2-D9	3.107	CONNECTOR, SEN-FUEL LVL (PART OF 20) (4-WAY F) (W/LEADS) (2.383) (AC-DELCO #PT757)	99	Y	2	12126487
23.		8.921	NUT-TYPE C WIDE RANGE U-SHAPE 8X1.25 (10 (F/TNK STRP)	99		6	11516149
24.	2-D8	3.015	STRAP, F/TNK SHLD	99	Y	RH	10410938
25.		8.900	BOLT-HEX, M8X1.25X30, 22 THD, 24MM OD, 9.8, 7114M (F/TNK STRP)	99		10	11516594
26.	2-D9	3.120	VENT, F/TNK	99	Y	1	10298121
27.	2-N24	12.986	BRACE, R/CMPT PNL (127.9X126.3X66.5)	99	Y	LH	10263983
	2-N24	12.986	BRACE, R/CMPT PNL (127.9X126.3X73.1)	99	Y	RH	10299078
28.	2-D9	3.120	VALVE, F/TNK VENT	99	Y	1	10299145
		N.S.	CONNECTOR, F/TNK VENT VLV HOSE			1	

cardiagn.com

29.		8.917	NUT, HEX W/CON WA 6X1X5.5 16-OD ZP 9 (FUEL FLTR BRKT)	99		1	11517293
30.	2-D28	3.890	FILTER, FUEL (INCLS 18, 31) (W/PRESSURE REGULATOR) (AC-DELCO #GF822)	99	Y	1	10299146
31.	2-D28	3.890	BRACKET, FUEL FLTR (PART OF 30)	99	Y	1	25121521
32.	2-D28	3.890	STUD, FUEL FLTR BRKT (2.559)	99	Y	1	10278878
33.	2-D11	3.163	HOSE, FUEL FEED RR	99	Y	1	10448899
		N.S.	CONNECTOR, FUEL FEED PIPE				
34.	2-D11	3.163	HOSE, FUEL PRESS REG RTN	99	Y	1	10410935
	2-D11	3.163	CONNECTOR KIT, FUEL FEED PIPE	99			
35.	2-D11	3.163	HOSE, AUX FUEL RTN RR	99	Y	1	10410934
		N.S.	CONNECTOR, FUEL FEED PIPE				
36.		N.S.	HOSE, F/TNK VENT VLV (PRESS SENS)				
37.		N.S.	BOLT, FUEL SDR				
38.		DISCON	MODULE, F/TNK F/PMP	99	Y	LH	12455734
	2-D9	3.107	MODULE, F/TNK F/PMP (AC-DELCO #MU245)	99	Y	LH	12458243
	2-D28	3.900	MODULE, F/TNK F/PMP (3.107) (AC-DELCO #MU245)	99	Y	LH	12458243
40.	2-D9	3.110	STRAINER KIT, FUEL (AC-DELCO #TS1004)	99	Y	LH	12458245
41.	2-D8	3.015	STRAP, F/TNK SHLD	99	Y	LH	10442787
42.	2-D8	3.001	TANK KIT, FUEL (INCLS 43-44)	99	Y	LH	12458241
43.	2-D9	3.120	HOSE, F/TNK VENT (PART OF 42)	99	Y	1	10299105
44.	2-D8	3.003	HOSE, F/TNK FIL (PART OF 42)	99	Y	1	10299104
45.		8.948	CLAMP, 28.6-86.2 DIA WORM GEAR (FUEL FEED HOSE) (AC-DELCO #12338017)	99		1	12338017
46.	2-D9	3.120	CLAMP, F/TNK FIL VENT HOSE (2.75 DIA) (3.417)	99	Y	1	10039976
47.	2-D9	3.120	PIPE, F/TNK FIL VENT	99	Y	1	10417554
48.		8.977	SCREW, HEX W/FL WA TAP 6.3X1.81X16 17- OD AB-POINT PZOR BLK (F/TNK FIL PIPE GND)	99		1	11509371
49.		8.977	BOLT, SCR HEX W/FLAT WA 12 DIA TYPE AB (F/TNK FIL VENT PIPE)	99		3	11509374
50.	2-D8	3.028	CAP, F/TNK FIL (W/HDL) (AC-DELCO #22616286)	99	Y	1	22616286
51.		9.977	SCREW, HEX W/FL WA M4.2X2.25X20 TAP POR (F/TNK FIL PIPE HSG)	99		5	11509443
52.		N.S.	TAPE, F/TNK FIL DR BLACKOUT	99		1	
53.		8.977	BOLT-SCREW, M4.2X1.41X13, 5.4 THD, 12.5 OD, GM6172M, GM6138M (F/TNK FIL DR HGE)	99		2	15714277
54.	2-N24	12.945	BUMPER, F/TNK FIL DR HGE (PART OF 56) (10.263)	99	Y	1	10276643
55.		N.S.	HINGE, F/TNK FIL DR (PART OF 56)	99			
56.	2-N24	12.945	DOOR, F/TNK FIL (SMC DR W/STEEL HGE) (INCLS 54-55)	99	Y	1	10429498

cardiagn.com

57.	2-D8	3.028	HOLDER, F/TNK FIL CAP	99	Y	1	10284784
58.	2-D8	3.003	HOUSING, F/TNK FIL PIPE (POCKET) (INCLS 60-61)	99	Y	1	10401497
59.	2-N24	12.945	NUT, F/TNK FIL DR LK ACTR (TO PCKT, POSN #1) (M8X1.0X4.3) (HEX)	99	Y	1	3537631
60.		8.921	NUT, U-SHAPED, M4.2X1.41 THD, PZOR, PNL 3.2-6.35, 14MM WIDE, 19MM LNG, C TO E 9 (F/TNK FIL PIPE HSG) (PART OF 58)	99		5	11509755
61.	2-N24	12.945	BUMPER, F/TNK FIL DR (PART OF 58)	99	Y	2	3547884
62.	2-N24	12.945	ACTUATOR, F/TNK FIL DR LK (INCLS FUEL DOOR RELEASE LEVER)	99	Y	1	10275633
	2-N24	12.945	CONNECTOR, SOL-F/TNK FIL DR LK ACTR (BLACK) (2-WAY F W/LEADS) (2.535) (AC-DELCO #PT159)	99	Y	1	12101888
63.		8.917	NUT, HEX W/CON WA 6X1X5.5 16-OD ZP 9 (F/TNK FIL DR LK ACTR) (POSN #2)	99		1	11517[illegible]
64.	2-N24	12.945	BRACKET, F/TNK FIL DR LK ACTR	99	Y	1	10280943
65.		N.S.	RIVET, F/TNK FIL DR LK ACTR BRKT			2	
66.	2-D11	3.162	RETAINER, FUEL FEED & RTN FRT PIPE (PART OF 68)	99	Y	3	10276219
67.	2-D11	3.162	CLIP, FUEL PIPE (PART OF 68)	99	Y	3	10281327
68.	2-D11	3.163	PIPE, FUEL FEED & RTN (INCLS 2, 66-67, 69-71)	99	Y	1	10299138
69.	2-D11	3.162	CLIP, FUEL FEED & RTN PIPE (PART OF 68)	99	Y	1	10288898
70.		N.S.	PIPE, FUEL FEED (PART OF 68)				
71.		N.S.	PIPE, FUEL FEED (PART OF 68)				
72.	2-D8	3.023	NUT, F/TNK STRP (3.015)	99	Y	4	10281493
73.	2-D11	3.163	HOSE, FUEL FEED FRT	99	Y	1	10401798
74.	2-D10	3.145	TUBE, EVAP EMIS CNSTR PURGE (FUEL FEED PIPE ASM TO ENG PURGE VALVE) (INCLUDES SERVICE PORT)	99	Y	1	12582563
75.	2-D10	3.130	BRACKET, EVAP EMIS CNSTR PURGE SOL VLV	99	Y	1	10277833
76.	2-D10	3.130	VALVE, EVAP EMIS CNSTR CONT	99	Y	1	24574755
77.	2-D9	3.120	HOSE, EVAP EMIS CNSTR SOV VLV (INCLS 78) (3.145)	99	Y	1	10417549
78.		8.948	CLAMP, WORM TYPE (11/16"TO 1 5/16") (PART OF 77) (AC-DELCO #1470030)	99		AR	1470030
79.	2-D8	3.015	SHIELD, F/TNK	99	Y	RH	10306421
80.		8.917	NUT, HEX W/CON WA 6X1X5.5 16-OD ZP 9 (F/TNK SHLD)	99		2	11517293
81.	2-D8	3.015	SHIELD, F/TNK	99	Y	LH	10410936
82.	2-D24	3.682	SENSOR, FUEL PRESS	99	Y	1	16244511

cardiagn.com

	2-D9	3.107	**CONNECTOR**, SEN-F/TNK PRESS (BLACK) (3-WAY F) (W/LEADS) (2.535) (AC-DELCO #PT117)	99	Y	1	12085495
83.		8.977	**SCREW**, HEX W/FL WA TAP 6.3X1.81X16 17- OD AB-POINT PZOR BLK (F/TNK PRESS SEN BRKT)	99	.....	1	11509371
84.	2-D9	3.112	**SEAL**, FUEL SDR (AC-DELCO #G4)	99	Y	2	12458250

RPO DEFINITIONS
LS1 -- ENGINE GAS, 8 CYL, 5.7L, SFI, ALUMINUM ENGINE

cardiagn.com

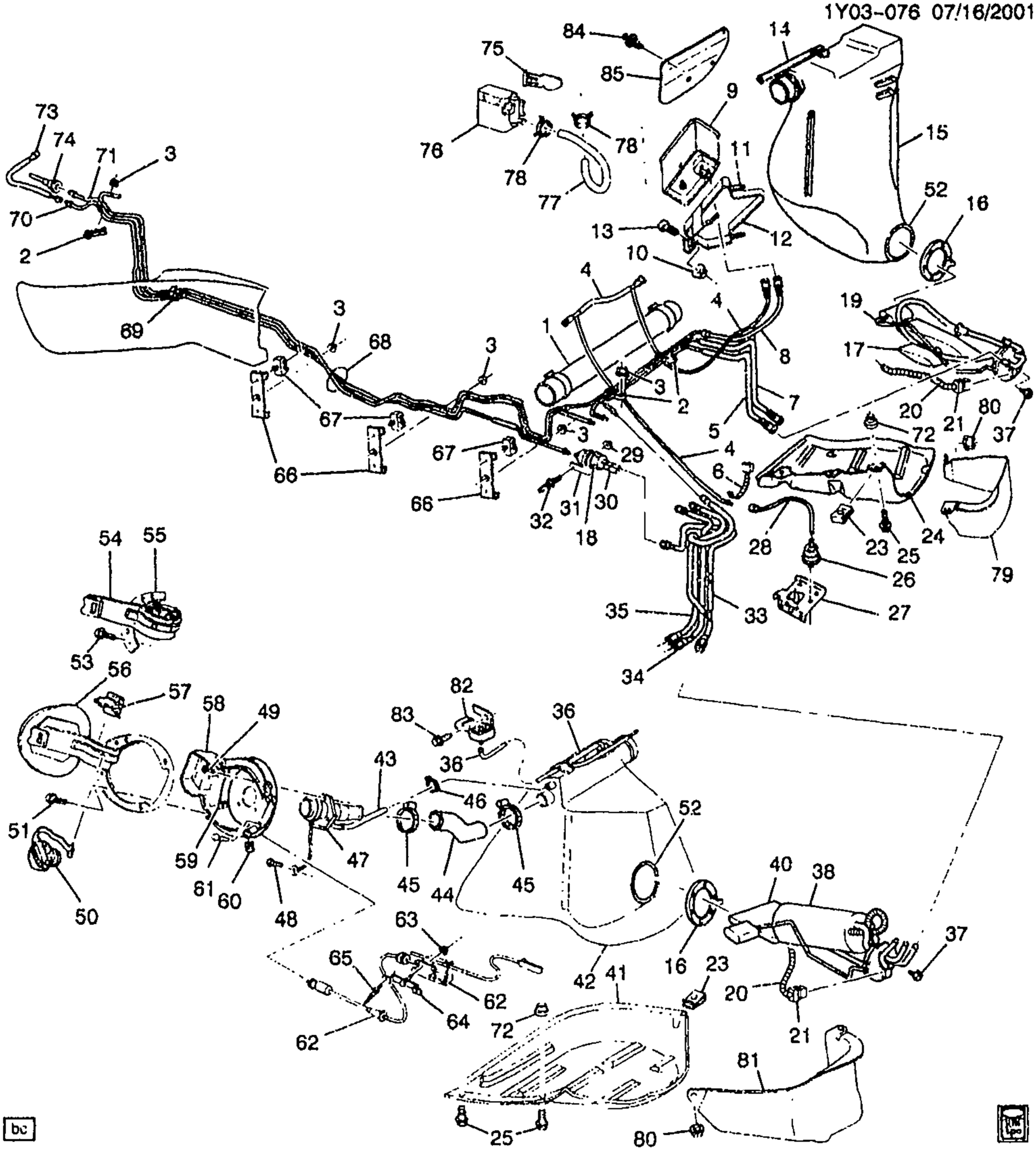

2000 Y FUEL SUPPLY SYSTEM

1.	2-D11	3.163	HOSE, FUEL FEED (2.0" DIA) (CROSSOVER HOSE)	00	Y	1 10409948
2.	2-D11	3.162	CLIP, FUEL FRT PIPE (PART OF 68)	00	Y	3 10276208

cardiagn.com

3.		8.917	NUT, HEX W/CON WA 6X1X5.5 16-OD ZP 9 (FUEL FEED & RTN PIPE RET) (HOLDS CLIP TO STUD)	00		6	11517293
4.	2-D9	3.120	HOSE, EVAP EMIS RR	00	Y	1	10409949
5.	2-D11	3.163	PIPE, AUX FUEL RTN RR	00	Y	1	10448901
6.		8.965	STRAP, ADJ TIE (F/INJN FUEL FEED HOSE) (AC-DELCO #12337820)	00		5	12337820
7.	2-D11	3.163	PIPE, AUX FUEL FEED RR	00	Y	1	10448900
8.	2-D10	3.145	HOSE, EVAP EMIS CNSTR PURGE (3.107)	00	Y	1	10276212
9.	2-D10	3.130	CANISTER, EVAP EMIS (AC-DELCO #215-181)	00	Y (LS1)	1	17113332
10.		8.917	NUT, HEX W/CON WA 6X1X5.5 16-OD ZP 9 (EVAP EMIS CNSTR BRKT)	00		2	11517293
11.		N.S.	STUD, EVAP EMIS CNSTR BRKT (PART OF 12)			2	
12.	2-D10	3.130	BRACKET, EVAP EMIS CNSTR (INCLS 11, 13)	00	Y	1	10287787
13.		8.900	BOLT, M6X1X30, POR 9.8 (EVAP EMIS CNSTR BRKT) (PART OF 12)	00		1	11516425
14.		N.S.	HOSE, F/TNK VENT VLV			RH	
15.	2-D8	3.001	TANK KIT, FUEL	00	Y	RH	12459858
16.		N.S.	GASKET, FUEL SDR				
17.	2-D9	3.110	STRAINER KIT, FUEL (AC-DELCO #TS140)	00	Y	RH	12459862
18.		N.S.	REGULATOR, FUEL PRESS (PART OF 30)				
19.	2-D9	3.107	MODULE KIT, F/TNK F/PMP (INCLS FUEL METER) (INCLS GSKT) (AC-DELCO #MU1004)	00	Y	RH	88895126
	2-D28	3.900	MODULE KIT, F/TNK F/PMP (INCLS FUEL METER) (INCLS GSKT) (3.107) (AC-DELCO #MU1004)	00	Y	RH	88895126
20.	2-A18	2.480	HARNESS, F/PMP WRG (HARN JMPR TO FUEL TK) (INCLS 21)	00	Y	1	12189906
	2-A18	2.480	HARNESS, F/PMP WRG (HARN TO JMPR) (INCLS 21)	00	Y	1	12189905
21.	2-D9	3.107	CONNECTOR, SEN-FUEL LVL (PART OF 20) (4-WAY F) (W/LEADS) (2.383) (AC-DELCO #PT757)	00	Y	2	12126487
23.		8.921	NUT-TYPE C WIDE RANGE U-SHAPE 8X1.25 (10 (F/TNK STRP)	00		6	11516149
24.	2-D8	3.015	STRAP, F/TNK SHLD	00	Y	RH	10410938
25.		8.900	BOLT-HEX, M8X1.25X3[illegible], 22 THD, 24MM OD, 9.8 7114M (F/TNK STRP)	00		10	11516594
26.		N.S.	VALVE, F/TNK VENT (PART OF FUEL TANK)	00			
27.	2-N24	12.986	BRACE, R/CMPT PNL (127.9X126.3X66.5)	00	Y	LH	10263983

cardiagn.com

	2-N24	12.986	BRACE, R/CMPT PNL (127.9X126.3X73.1)	00	Y	RH	10299078
28.		N.S.	VALVE, F/TNK VENT (PART OF FUEL TANK)	00			
		N.S.	CONNECTOR, F/TNK VENT VLV HOSE			1	
29.		8.917	NUT, HEX W/CON WA 6X1X5.5 16-OD ZP 9 (FUEL FLTR BRKT)	00		1	11517293
30.	2-D28	3.890	FILTER, FUEL (INCLS 18, 31) (W/PRESSURE REGULATOR) (AC-DELCO #GF822)	00	Y	1	10299146
31.	2-D28	3.890	BRACKET, FUEL FLTR (PART OF 30)	00	Y	1	25121521
32.	2-D28	3.890	STUD, FUEL FLTR BRKT (2.559)	00	Y	1	10278878
33.	2-D11	3.163	HOSE, FUEL FEED RR	00	Y	1	10448899
		N.S.	CONNECTOR, FUEL FEED PIPE				
34.	2-D11	3.163	HOSE, FUEL PRESS REG RTN	00	Y	1	10448903
35.	2-D11	3.163	HOSE, AUX FUEL RTN RR	00	Y	1	10448902
		N.S.	CONNECTOR, FUEL FEED PIPE				
36.		N.S.	HOSE, F/TNK VENT VLV (PRESS SENS)				
37.		N.S.	BOLT, FUEL SDR				
38.	2-D9	3.107	MODULE KIT, F/TNK F/PMP (INCLS FUEL METER) (AC-DELCO #MU1001)	00	Y	LH	12459861
	2-D28	3.900	MODULE KIT, F/TNK F/PMP (INCLS FUEL METER) (3.107) (AC-DELCO #MU1001)	00	Y	LH	12459861
40.		N.S.	STRAINER KIT, FUEL	00			
41.	2-D8	3.015	STRAP, F/TNK SHLD	00	Y	LH	10442787
42.	2-D8	3.001	TANK KIT, FUEL (INCLS 43-44)	00	Y	LH	12459859
43.		N.S.	HOSE, F/TNK VENT VLV (PART OF 42)	00			
44.		N.S.	HOSE, F/TNK FIL (PART OF 42)	00			
45.	2-D11	3.162	CLAMP, FUEL FEED HOSE (1.0" DIA)	00	Y	1	10417433
46.		N.S.	CLAMP, F/TNK FIL VENT HOSE	00			
47.	2-D9	3.120	PIPE, F/TNK FIL VENT	00	Y	1	10405679
48.		8.977	SCREW, HEX W/FL WA TAP 6.3X1.81X16 17- OD AB-POINT PZOR BLK (F/TNK FIL PIPE GND)	00		1	11509371
49.		8.977	BOLT, SCR HEX W/FLAT WA 12 DIA TYPE AB (F/TNK FIL VENT PIPE)	00		3	11509374
50.	2-D8	3.028	CAP, F/TNK FIL (W/HDL) (AC-DELCO #22616286)	00	Y	1	22616286
51.		8.977	SCREW, HEX W/FL WA M4.2X2.25X20 TAP POR (F/TNK FIL PIPE HSG)	00		5	11508443
52.	2-D9	3.112	SEAL, FUEL SDR (AC-DELCO #G25)	00	Y	2	12459863
53.		8.977	BOLT-SCREW, M4.2X1.41X13. 5.4 THD. 12.5 OD, GM6172M, GM6138M (F/TNK FIL DR HGE)	00		2	15714277
54.	2-N24	12.945	BUMPER, F/TNK FIL DR HGE (PART OF 56) (10.263)	00	Y	1	10276643

cardiagn.com

55.		N.S.	HINGE, F/TNK FIL DR (PART OF 56)	00			
56.	2-N24	12.945	DOOR, F/TNK FIL (SMC DR W/STEEL HGE) (INCLS 54-55)	00	Y	1	10429498
57.	2-D8	3.028	HOLDER, F/TNK FIL CAP	00	Y	1	10284784
58.	2-D8	3.003	HOUSING, F/TNK FIL PIPE (POCKET) (INCLS 60-61)	00	Y	1	10401497
59.	2-N24	12.945	NUT, F/TNK FIL DR LK ACTR (TO PCKT, POSN #1) (M8X1.0X4.3) (HEX)	00	Y	1	3537631
60.		8.921	NUT, U-SHAPED, M4.2X1.41 THD, PZOR, PNL 3.2-6.35, 14MM WIDE, 19MM LNG, C TO E 9 (F/TNK FIL PIPE HSG) (PART OF 58)	00		5	11509755
61.	2-N24	12.945	BUMPER, F/TNK FIL DR (PART OF 58)	00	Y	2	3547884
62.	2-N24	12.945	ACTUATOR, F/TNK FIL DR LK (INCLS FUEL DOOR RELEASE LEVER)	00	Y	1	10275633
	2-N24	12.945	CONNECTOR, SOL-F/TNK FIL DR LK ACTR (BLACK) (2-WAY F W/LEADS) (2.535) (AC-DELCO #PT159)	00	Y	1	12101888
63.		8.917	NUT, HEX W/CON WA 6X1X5.5 16-OD ZP 9 (F/TNK FIL DR LK ACTR) (POSN #2)	00		1	11517293
64.	2-N24	12.945	BRACKET, F/TNK FIL DR LK ACTR	00	Y	1	10280943
65.		N.S.	RIVET, F/TNK FIL DR LK ACTR BRKT			2	
66.	2-D11	3.162	RETAINER, FUEL FEED & RTN FRT PIPE (PART OF 68)	00	Y	3	10276219
67.	2-D11	3.162	CLIP, FUEL PIPE (PART OF 68)	00	Y	3	10281327
68.	2-D11	3.163	PIPE, FUEL FEED & RTN (INCLS 2, 66-67, 69-71)	00	Y	1	10299138
69.	2-D11	3.162	CLIP, FUEL FEED & RTN PIPE (PART OF 68)	00	Y	1	10288898
70.		N.S.	PIPE, FUEL FEED (PART OF 68)				
71.		N.S.	PIPE, FUEL FEED (PART OF 68)				
72.	2-D8	3.023	NUT, F/TNK STRP (3.015)	00	Y	4	10281493
73.	2-D11	3.163	HOSE, FUEL FEED FRT	00	Y	1	10401798
74.	2-D10	3.145	TUBE, EVAP EMIS CNSTR PURGE (FUEL FEED PIPE ASM TO ENG PURGE VALVE) (INCLUDES SERVICE PORT)	00	Y	1	12562563
75.	2-D10	3.130	BRACKET, EVAP EMIS CNSTR PURGE SOL VLV	00	Y	1	10277833
76.	2-D10	3.130	VALVE, EVAP EMIS CNSTR VENT SOL	00	Y	1	10293954
77.		8.962	HOSE, FUEL, OIL EVAP 5/8"X25' (EVAP EMIS CNSTR) (INCLS 78)	00		AR	9438383
78.	2-D10	3.145	CLAMP, EVAP EMIS CNSTR VENT SOL VLV HOSE (PART OF 77)	00	Y	2	21008428
79.	2-D8	3.015	SHIELD, F/TNK	00	Y	RH	10306421
80.		8.917	NUT, HEX W/CON WA 6X1X5.5 16-OD ZP 9 (F/TNK SHLD)	00		2	11517293

cardiagn.com

81.	2-D8	3.015	SHIELD, F/TNK	00	Y	LH	10410936
82.	2-D9	3.107	SENSOR, F/TNK PRESS	00	Y	1	16238399
	2-D9	3.107	CONNECTOR, SEN-F/TNK PRESS (BLACK) (3-WAY F) (W/LEADS) (2.535) (AC-DELCO #PT117)	00	Y	1	12085495
	2-D9	3.107	CONNECTOR, SEN-F/TNK PRESS (3-WAY M, W/LEADS) (2.530) (AC-DELCO #PT1033)	00	Y	1	15305889
83.		8.977	SCREW, HEX W/FL WA TAP 6.3X1.81X16 17- OD AB-POINT PZOR BLK (F/TNK PRESS SEN BRKT)	00		1	11509371
84.	2-D10	3.130	RETAINER, EVAP EMIS CNSTR OPG CVR (PUSH IN) (BLACK) (PUSH IN W/SCREW) (6.3MM DIA X 23MM) (1.276)	00	Y	3	20664092
85.	2-D10	3.130	COVER, EVAP EMIS CNSTR OPG	00	Y	1	10409447

RPO DEFINITIONS
LS1 - ENGINE GAS, 8 CYL, 5.7L, SFI, ALUMINUM ENGINE

cardiagn.com

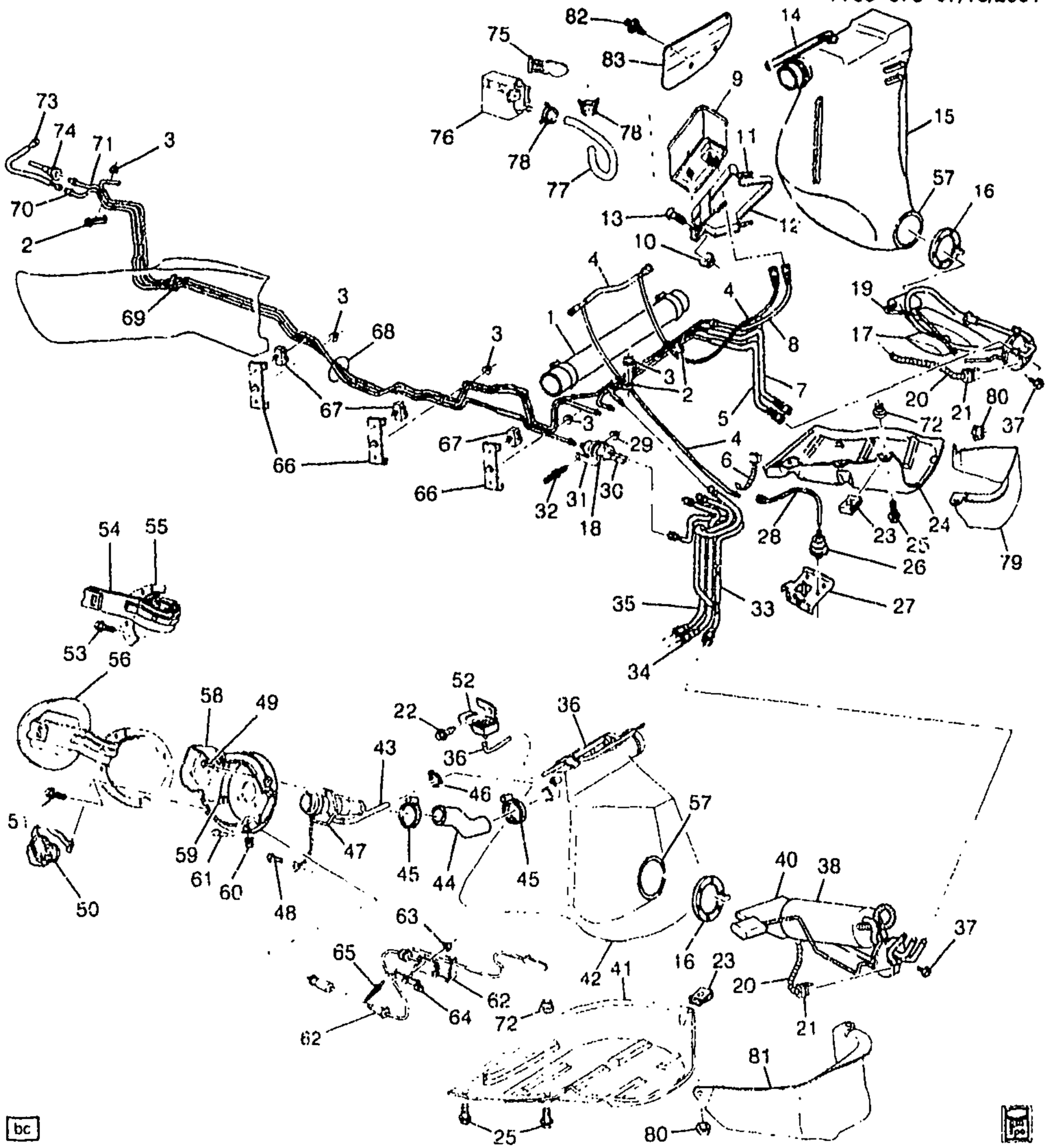

1Y03-075

2001-2002 Y FUEL SUPPLY SYSTEM

1.	2-D11	3.163	HOSE, FUEL FEED (2.0" DIA) (CROSSOVER HOSE)	01-02 Y	1	10409948
2.	2-D11	3.162	CLIP, FUEL FRT PIPE (PART OF 68)	01-02 Y	3	10276208

cardiagn.com

3.		8.917	NUT, HEX W/CON WA 6X1X5.5 16-OD ZP 9 (FUEL FEED & RTN PIPE RET) (HOLDS CLIP TO STUD)	01-02		6	11517293
4.	2-D9	3.120	HOSE, EVAP EMIS RR	01-02	Y	1	10409949
5.	2-D11	3.163	PIPE, AUX FUEL RTN RR	01-02	Y	1	10448901
6.		8.965	STRAP, ADJ TIE (F/INJN FUEL FEED HOSE) (AC-DELCO #12337820)	01-02		5	12337820
7.	2-D11	3.163	PIPE, AUX FUEL FEED RR	01-02	Y	1	10448900
8.	2-D10	3.145	HOSE, EVAP EMIS CNSTR PURGE (3.107)	01-02	Y	1	10276212
9.	2-D10	3.130	CANISTER, EVAP EMIS (AC-DELCO #215-181)	01-02	Y (LS1)	1	17113332
	2-D10	3.130	CANISTER, EVAP EMIS (AC-DELCO #215-181)	01-02	Y (LS6)	1	17113332
10.		8.917	NUT, HEX W/CON WA 6X1X5.5 16-OD ZP 9 (EVAP EMIS CNSTR BRKT)	01-02		2	11517293
11.		N.S.	STUD, EVAP EMIS CNSTR BRKT (PART OF 12)			2	
12.	2-D10	3.130	BRACKET, EVAP EMIS CNSTR (INCLS 11, 13)	01-02	Y	1	10287787
13.		8.900	BOLT, M6X1X30, POR 9.8 (EVAP EMIS CNSTR BRKT) (PART OF 12)	01-02		1	11516425
14.		N.S.	HOSE, F/TNK VENT VLV			RH	
15.	2-D8	3.001	TANK KIT, FUEL	01-02	Y	RH	12459858
16.		N.S.	GASKET, FUEL SDR				
17.		N.S.	STRAINER KIT, FUEL (RH TANK)	01-02			
18.		N.S.	REGULATOR, FUEL PRESS (PART OF 30)				
19.	2-D9	3.107	MODULE KIT, F/TNK F/PMP (INCLS FUEL METER) (INCLS GSKT) (AC-DELCO #MU1004)	01-02	Y	RH	88895126
	2-D28	3.900	MODULE KIT, F/TNK F/PMP (INCLS FUEL METER) (INCLS GSKT) (3.107) (AC-DELCO #MU1004)	01-02	Y	RH	88895126
20.	2-A18	2.480	HARNESS, F/PMP WRG (HARN JMPR TO FUEL TK) (INCLS 21)	01-02	Y	1	12189906
	2-A18	2.480	HARNESS, F/PMP WRG (HARN TO JMPR) (INCLS 21)	01-02	Y	1	12189905
21.	2-D8	3.107	CONNECTOR, SEN-FUEL LVL (PART OF 20) (4-WAY F) (W/LEADS) (2.383) (AC-DELCO #PT757)	01-02	Y	2	12126487
22.		8.977	SCREW, HEX W/FL WA TAP 6.3X1.81X16 17- OD AB-POINT PZOR BLK (F/TNK PRESS SEN BRKT)	01-02		1	11509371
23.		8.921	NUT-TYPE C WIDE RANGE U-SHAPE 8X1.25 (10 (F/TNK STRP)	01-02		6	11516149
24.	2-D8	3.015	STRAP, F/TNK SHLD	01-02	Y	RH	10410938
25.		8.900	BOLT-HEX, M8X1.25X30, 22 THD, 24MM OD, 9.8, 7114M (F/TNK STRP)	01-02		10	11516594

cardiagn.com

26.		N.S.	VALVE, F/TNK VENT (PART OF FUEL TANK)	01-02			
27.	2-N24	12.986	BRACE, R/CMPT PNL (127.9X126.3X66.5)	01-02	Y	LH	10263983
	2-N24	12.986	BRACE, R/CMPT PNL (127.9X126.3X73.1)	01-02	Y	RH	10299078
28.		N.S.	VALVE, F/TNK VENT (PART OF FUEL TANK)	01-02			
		N.S.	CONNECTOR, F/TNK VENT VLV HOSE	01-02		1	
29.		8.917	NUT, HEX W/CON WA 6X1X5.5 16-OD ZP 9 (FUEL FLTR BRKT)	01-02		1	11517293
30.	2-D28	3.890	FILTER, FUEL (INCLS 18, 31) (W/PRESSURE REGULATOR) (AC-DELCO #GF822)	01-02	Y	1	10299146
31.	2-D28	3.890	BRACKET, FUEL FLTR (PART OF 30)	01-02	Y	1	25121521
32.	2-D28	3.890	STUD, FUEL FLTR BRKT (2.559)	01-02	Y	1	10278878
33.	2-D11	3.163	HOSE, FUEL FEED RR	01-02	Y	1	10448899
		N.S.	CONNECTOR, FUEL FEED PIPE				
34.	2-D11	3.163	HOSE, FUEL PRESS REG RTN	01-02	Y	1	10448903
35.	2-D11	3.163	HOSE, AUX FUEL RTN RR	01-02	Y	1	10448902
		N.S.	CONNECTOR, FUEL FEED PIPE				
36.		N.S.	HOSE, F/TNK VENT VLV (PRESS SENS)	01-02			
37.		N.S.	BOLT, FUEL SDR	01-02			
38.	2-D9	3.107	MODULE KIT, F/TNK F/PMP (INCLS FUEL METER) (AC-DELCO #MU1001)	01-02	Y	LH	12459861
	2-D28	3.900	MODULE KIT, F/TNK F/PMP (INCLS FUEL METER) (3.107) (AC-DELCO #MU1001)	01-02	Y	LH	12459861
40.		N.S.	STRAINER KIT, FUEL	01-02			
41.	2-D8	3.015	STRAP, F/TNK SHLD	01-02	Y	LH	10442787
42.	2-D8	3.001	TANK KIT, FUEL (INCLS 43-44)	01-02	Y	LH	12459859
43.		N.S.	HOSE, F/TNK VENT VLV (PART OF 42)	01-02			
44.		N.S.	HOSE, F/TNK FIL (PART OF 42)	01-02			
45.	2-D11	3.162	CLAMP, FUEL FEED HOSE (1.0" DIA)	01-02	Y	1	10417433
46.		N.S.	CLAMP, F/TNK FIL VENT HOSE	01-02			
47.	2-D9	3.120	PIPE, F/TNK FIL VENT	01-02	Y	1	10405679
48.		8.977	SCREW, HEX W/FL WA TAP 6.3X1.81X16 17-- OD AB--POINT PZOR BLK (F/TNK FIL PIPE GND)	01-02		1	11509371
49.		8.977	BOLT, SCR HEX W/FLAT WA 12 DIA TYPE AB (F/TNK FIL VENT PIPE)	01-02		3	11509374
50.	2-D8	3.028	CAP, F/TNK FIL (W/HDL) (AC-DELCO #22816286)	01-02	Y	1	22616286
51.		8.977	SCREW, HEX W/FL WA M4 2X2.25X20 TAP POR (F/TNK FIL PIPE HSG)	01-02		5	11508443
52.	2-D9	3.107	SENSOR, F/TNK PRESS	01-02	Y	1	16238399

cardiagn.com

	2-D9	3.107	CONNECTOR, SEN-F/TNK PRESS (BLACK) (3-WAY F) (W/LEADS) (2.535) (AC-DELCO #PT117)	01-02	Y	1	12085495
	2-D9	3.107	CONNECTOR, SEN-F/TNK PRESS (3-WAY M, W/LEADS) (2.530) (AC-DELCO #PT1033)	01-02	Y	1	15305889
53.		8.977	BOLT-SCREW, M4.2X1.41X13, 5.4 THD, 12.5 OD, GM6172M, GM6138M (F/TNK FIL DR HGE)	01-02		2	15714277
54.	2-N24	12.945	BUMPER, F/TNK FIL DR HGE (PART OF 56) (10.263)	01-02	Y	1	10276643
55.		N.S.	HINGE, F/TNK FIL DR (PART OF 56)	01-02			
56.	2-N24	12.945	DOOR, F/TNK FIL (SMC DR W/STEEL HGE) (INCLS 54-55)	01-02	Y	1	10443229
57.	2-D9	3.112	SEAL, FUEL SDR (AC-DELCO #G25)	01-02	Y	2	12459863
58.	2-D8	3.003	HOUSING, F/TNK FIL PIPE (POCKET) (INCLS 60-61)	01-02	Y	1	10401497
59.	2-N24	12.945	NUT, F/TNK FIL DR LK ACTR (TO PCKT, POSN #1) (M8X1.0X4.3) (HEX)	01-02	Y	1	3537631
60.		8.921	NUT, U-SHAPED, M4.2X1.41 THD, PZOR, PNL 3.2-6.35, 14MM WIDE, 19MM LNG, C TO E 9 (F/TNK FIL PIPE HSG) (PART OF 58)	01-02		5	11509755
61.	2-N24	12.945	BUMPER, F/TNK FIL DR (PART OF 58)	01-02	Y	2	3547884
62.	2-N24	12.945	ACTUATOR, F/TNK FIL DR LK (INCLS FUEL DOOR RELEASE LEVER)	01-02	Y	1	10275633
	2-D9	3.107	CONNECTOR, SEN-F/TNK PRESS (BLACK) (3-WAY F) (W/LEADS) (2.535) (AC-DELCO #PT117)	01-02	Y	1	12085495
	2-D9	3.107	CONNECTOR, SEN-F/TNK PRESS (3-WAY M, W/LEADS) (2.530) (AC-DELCO #PT1033)	01-02	Y	1	15305889
63.		8.917	NUT, HEX W/CON WA 6X1X5.5 16-OD ZP 9 (F/TNK FIL DR LK ACTR) (POSN #2)	01-02		1	11517293
64.	2-N24	12.945	BRACKET, F/TNK FIL DR LK ACTR	01-02	Y	1	10280943
65.		N.S.	RIVET, F/TNK FIL DR LK ACTR BRKT			2	
66.	2-D11	3.162	RETAINER, FUEL FEED & RTN FRT PIPE (PART OF 68)	01-02	Y	3	10276219
67.	2-D11	3.162	CLIP, FUEL PIPE (PART OF 68)	01-02	Y	3	10281327
68.	2-D11	3.163	PIPE, FUEL FEED & RTN (INCLS 2, 66-67, 69-71)	01-02	Y	1	10299138
69.	2-D11	3.162	CLIP, FUEL FEED & RTN PIPE (PART OF 68)	01-02	Y	1	10288898
70.		N.S.	PIPE, FUEL FEED (PART OF 68)				
71.		N.S.	PIPE, FUEL FEED (PART OF 68)				
72.	2-D8	3.023	NUT, F/TNK STRP (3.015)	01-02	Y	4	10281493
73.	2-D11	3.163	HOSE, FUEL FEED FRT	01-02	Y	1	10401798

cardiagn.com

							1Y03-075
74.	2-D10	3.145	TUBE, EVAP EMIS CNSTR PURGE (FUEL FEED PIPE ASM TO ENG PURGE VALVE) (INCLUDES SERVICE PORT)	01-02	Y	1	12562563
75.	2-D10	3.130	BRACKET, EVAP EMIS CNSTR PURGE SOL VLV	01-02	Y	1	10277833
76.	2-D10	3.130	VALVE, EVAP EMIS CNSTR VENT SOL	01-02	Y	1	10293954
77.		8.962	HOSE, FUEL, OIL EVAP 5/8"X25' (EVAP EMIS CNSTR) (INCLS 78) .	01-02	.....	AR	9438383
78.	2-D10	3.145	CLAMP, EVAP EMIS CNSTR VENT SOL VLV HOSE (PART OF 77)	01-02	Y	2	21008428
79.	2-D8	3.015	SHIELD, F/TNK	01-02	Y	RH	10306421
80.		8.917	NUT, HEX W/CON WA 6X1X5.5 16-OD ZP 9 (F/TNK SHLD)	01-02	.....	2	11517293
81.	2-D8	3.015	SHIELD, F/TNK	01-02	Y	LH	10410936
82.	2-D10	3.130	RETAINER, EVAP EMIS CNSTR OPG CVR (PUSH IN) (BLACK) (PUSH IN W/SCREW) (6.3MM DIA X 23MM) (1.276)	01-02	Y	3	20664092
83.	2-D10	3.130	COVER, EVAP EMIS CNSTR OPG	01-02	Y	1	10409447

RPO DEFINITIONS
LS1 - ENGINE GAS, 8 CYL, 5.7L, SFI, ALUMINUM ENGINE
LS6 - ENGINE GAS, 8 CYL, 5.7L, SFI, ALUMINUM, HIGH OUTPUT

cardiagn.com

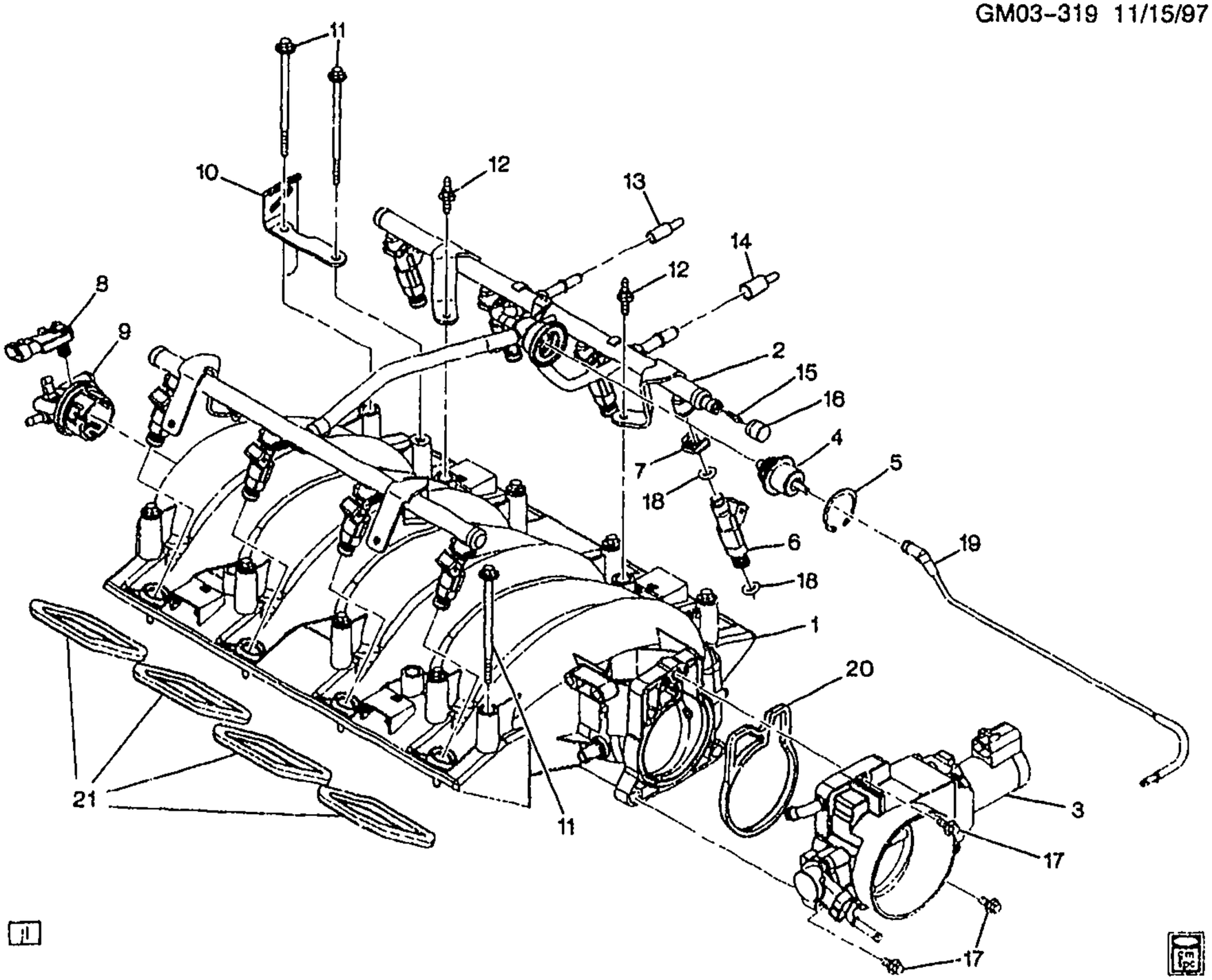

GM03-319

1997-1998 Y FUEL INJECTOR RAIL SFI (LS1/5.7G)

1.	2-D12	3.265	MANIFOLD, INT (SERV) (INCL 1)	97-98	Y (LS1)	1	88894095
2.	2-D13	3.330	RAIL, SEQ M/PORT F/INJN FUEL (AC-DELCO #12556705)	97-98	Y (LS1)	1	12556705
3.	2-D14	3.335	BODY, THROT (SEE GROUP 3 000 "THROTTLE BODY"FOR DETAIL ILLUSTRATED VIEW.) (AC-DELCO #17113564)	97-98	Y (LS1)	1	17113564
4.	2-D13	3.330	REGULATOR, FUEL PRESS (AC-DELCO #12554677)	97-98	Y (LS1)	1	12554677
5.	2-D13	3.330	RING, FUEL PRESS REG RET	97-98	Y (LS1)	1	24500246
6.	2-D13	3.300	INJECTOR KIT, SEQ M/PORT FUEL (INCLS 7, 18) (AC-DELCO #12533952)	97-98	Y (LS1)	8	12533952
7.	2-D14	3.332	RETAINER, F/INJR (PART OF ITEM #6)	97-98	Y (LS1)	8	12554679
8.	2-D24	3.682	SENSOR, MAP (W/SEAL) (AC-DELCO #213-331)	97-98	Y (LS1)	1	16212460
9.		N.S.	PLUG, MAP SEN HOLE (PART OF 1)				

cardiagn.com

								GM03-319
10.	2-D13	3.330	BRACKET, F/INJN FUEL RL (ON INTAKE MANIFOLD BEHIND FUEL RAIL-STOP)	97-98	Y (LS1)	.....	LH	12556074
	2-D13	3.330	BRACKET, F/INJN FUEL RL (90 DEG "S" TYPE BRKT)	97-98	Y (LS1)	.....	RH	12560384
11.	2-D12	3.275	BOLT, INT MANIF (W/FLAT WASHER) (M6X1.0X21.8, 13.6 OD, GM500M, ZF, MACH, ADHES)	97-98	Y (LS1)	.....	10	12552344
12.	2-D13	3.330	STUD, F/INJN FUEL RL (HFH 6X1X18.5X14 W/ADH, 6X1X14, 39.1 OAL, 14.2 OD, 9.8, 7114M) (AC-DELCO #12554211)	97-98	Y (LS1)	.....	4	12554211
13.		N.S.	CAP, OUTLET (PROTECTIVE)		.....			
14.		N.S.	CAP, INLET (PROTECTIVE)		.....			
15.	2-D13	3.330	VALVE, FUEL PRESS SERV (3.302)	97-98	Y (LS1)	.....	1	25532663
16.	2-D13	3.330	CAP, FUEL PRESS SERV VLV (3.163) (AC-DELCO #214-1044)	97-98	Y (LS1)	.....	2	25532662
17.	2-N12	1.097	BOLT, ENG COOL AIR BL PIPE (M6X1.0X30) (8.900)	97-98	Y (LS1)	.....	4	11514008
18.		N.S.	SEAL, INJECTOR (O-RING) (PART OF 6		.....			
19.	2-D13	3.330	TUBE, FUEL PRESS REG VAC ..	97-98	Y (LS1)	.....	1	12557155
20.	2-D14	3.336	SEAL, THROT BODY	97-98	Y (LS1)	.....	1	12552542
21.	2-D12	3.270	GASKET KIT, INT MANIF (CONTAINS 8 GASKETS)	97-98	Y (LS1)	.....	1	12533587

RPO DEFINITIONS
LS1 – ENGINE GAS, 8 CYL, 5.7L, SFI, ALUMINUM ENGINE

cardiagn.com

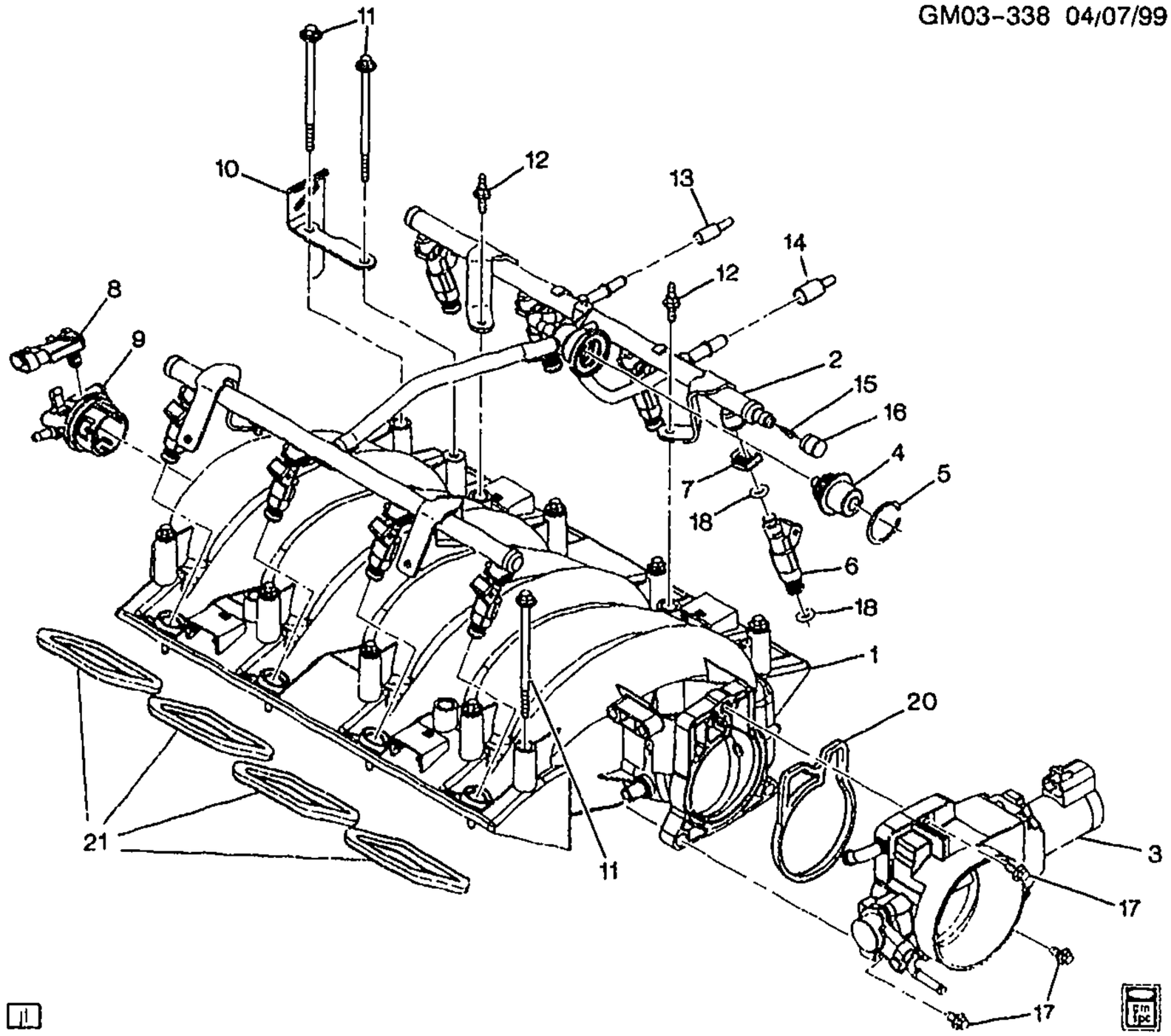

GM03-338

1999-2002 Y FUEL INJECTOR RAIL SFI (LS1/5.7G)
2001-2002 Y FUEL INJECTOR RAIL SFI (LS6/5.7S)

1.	2-D12	3.265	MANIFOLD, INT (SERV) (INCL 1)	99-00	Y (LS1)	1	88894095
	2-D12	3.265	MANIFOLD, INT (INCLS MANIF, GASKETS, SEALS, PLUGS, SENSOR) (INCL 1)	01	Y (LS1)	1	88890524
	2-D12	3.265	MANIFOLD, INT (INCLS, MANIF, GASKETS, SEALS, PLUGS, SENSOR) (INCL 1)	01	Y (LS6)	1	88890524
	2-D12	3.265	MANIFOLD, INT (INCLS MANIF, GASKETS, SEALS, PLUGS, SENSOR) (INCL 1)	02	Y (LS1)	1	88890524
	2-D12	3.265	MANIFOLD, INT (INCLS, MANIF, GASKETS, SEALS, PLUGS, SENSOR) (INCL 1)	02	Y (LS6)	1	88890524
2.	2-D13	3.330	RAIL, SEQ M/PORT F/INJN FUEL (AC-DELCO #217-1401)	99-02	Y (LS1)	1	12562815
	2-D13	3.330	RAIL, SEQ M/PORT F/INJN FUEL (AC-DELCO #217-1401)	01-02	Y (LS6)	1	12562815

cardiagn.com

3.	2-D14	3.335	BODY, THROT (SEE GROUP 3.000 "THROTTLE BODY"FOR DETAIL ILLUSTRATED VIEW.) (AC-DELCO #17113564)	99	Y (LS1)	1	17113564
	2-D14	3.335	BODY, THROT (INCLS:THROTTLE BODY SENSOR POSITION) (SEE GROUP 3.000 "THROTTLE BODY"FOR DETAIL ILLUSTRATED VIEW.)	00-02	Y (LS1)	1	17113668
	2-D14	3.335	BODY, THROT (INCLS:THROTTLE BODY SENSOR POSITION) (SEE GROUP 3.000 "THROTTLE BODY"FOR DETAIL ILLUSTRATED VIEW.)	01-02	Y (LS6)	1	17113669
4.	2-D9	3.107	DAMPENER, FUEL PULSE	99-02	Y (LS1)	1	12555909
	2-D9	3.107	DAMPENER, FUEL PULSE	01-02	Y (LS6)	1	12555909
5.	2-D13	3.330	RING, FUEL PRESS REG RET ...	99-02	Y (LS1)	1	24500246
	2-D13	3.330	RING, FUEL PRESS REG RET ...	01-02	Y (LS6)	1	24500246
6.	2-D13	3.300	INJECTOR KIT, M/PORT FUEL (INCLS 7, 18) (AC-DELCO #12456154)	99-00	Y (LS1)	8	12456154
	2-D13	3.300	INJECTOR KIT, SEQ M/PORT FUEL (INCLS 7, 18)	01	Y (LS1)	8	12482704
	2-D13	3.300	INJECTOR KIT, SEQ M/PORT FUEL (INCLS 7, 18)	01	Y (LS6)	8	12482704
	2-D13	3.300	INJECTOR KIT, SEQ M/PORT FUEL (INCLS 7, 18)	02	Y (LS1)	8	12482704
	2-D13	3.300	INJECTOR KIT, SEQ M/PORT FUEL (INCLS 7, 18)	02	Y (LS6)	8	12482704
7.	2-D14	3.332	RETAINER, F/INJR (PART OF 6) .	99-02	Y (LS1)	8	12554679
	2-D14	3.332	RETAINER, F/INJR (PART OF 6) .	01-02	Y (LS6)	8	12554679
8.	2-D24	3.682	SENSOR, MAP (W/SEAL) (AC-DELCO #213-331)	99-02	Y (LS1)	1	16212460
	2-D24	3.682	SENSOR, MAP (W/SEAL) (AC-DELCO #213-331)	01	Y37 (LS6)	1	16212460
	2-D24	3.682	SENSOR, MAP (W/SEAL) (AC-DELCO #213-331)	02	Y (LS6)	1	16212460
9.		N.S.	PLUG, MAP SEN HOLE (PART OF 1)		.....		
10.	2-D13	3.330	BRACKET, F/INJN FUEL RL (ON INTAKE MANIFOLD BEHIND FUEL RAIL-STOP)	99-02	Y (LS1)	LH	12556074
	2-D13	3.330	BRACKET, F/INJN FUEL RL (ON INTAKE MANIFOLD BEHIND FUEL RAIL-STOP)	01-02	Y (LS6)	LH	12556074
	2-D13	3.330	BRACKET, F/INJN FUEL RL (90 DEG "S" TYPE BRKT)	99-02	Y (LS1)	RH	12560384
	2-D13	3.330	BRACKET, F/INJN FUEL RL (90 DEG "S" TYPE BRKT)	01-02	Y (LS6)	RH	12560384
11.	2-D12	3.275	BOLT, INT MANIF (W/FLAT WASHER) (M6X1.0X21.8, 13.6 OD, GM500M, ZF, MACH, ADHES)	99-02	Y (LS1)	10	12552344

cardiagn.com

	2-D12	3.275	BOLT, INT MANIF (W/FLAT WASHER) (M6X1.0X21.8, 13.6 OD, GM500M, ZF, MACH, ADHES)	01-02	Y (LS6)	10	12552344
12.	2-D13	3.330	STUD, F/INJN FUEL RL (HFH 6X1X18.5X14 W/ADH, 6X1X14, 39.1 OAL, 14.2 OD, 9.8, 7114M) (AC-DELCO #12554211)	99-01	Y (LS1)	4	12554211
	2-D13	3.330	STUD, F/INJN FUEL RL (HFH 6X1X18.5X14 W/ADH, 6X1X14, 39.1 OAL, 14.2 OD, 9.8, 7114M) (AC-DELCO #12554211)	02	Y (LS1)	4	12554211
	2-D13	3.330	STUD, F/INJN FUEL RL (HFH 6X1X18.5X14 W/ADH, 6X1X14, 39.1 OAL, 14.2 OD, 9.8, 7114M) (AC-DELCO #12554211)	00-01	Y (LS6)	4	12554211
	2-D13	3.330	STUD, F/INJN FUEL RL (HFH 6X1X18.5X14 W/ADH, 6X1X14, 39.1 OAL, 14.2 OD, 9.8, 7114M) (AC-DELCO #12554211)	02	Y (LS6)	4	12554211
13.		N.S.	CAP, OUTLET (PROTECTIVE)				
14.		N.S.	CAP, INLET (PROTECTIVE)				
15.	2-D13	3.330	VALVE, FUEL PRESS SERV (3.302)	99-02	Y (LS1)	1	25532663
	2-D13	3.330	VALVE, FUEL PRESS SERV (3.302)	01-02	Y (LS6)	1	25532663
16.	2-D13	3.330	CAP, FUEL PRESS SERV VLV (3.163) (AC-DELCO #214-1044)	99-02	Y (LS1)	2	25532662
	2-D13	3.330	CAP, FUEL PRESS SERV VLV (3.163) (AC-DELCO #214-1044)	01-02	Y (LS6)	2	25532662
17.		8.900	BOLT, METRIC HEX FLG HD (M6X1X30) (POR 9.8) (ENG COOL AIR BL PIPE)	99-02		3	11514008
18.		N.S.	SEAL, INJECTOR (O-RING) (PART OF 6				
20.	2-D14	3.336	SEAL, THROT BODY	99-02	Y (LS1)	1	12552542
	2-D14	3.336	SEAL, THROT BODY	01-02	Y (LS6)	1	12552542
21.	2-D12	3.270	GASKET KIT, INT MANIF (CONTAINS 8 GASKETS)	99-02	Y (LS1)	1	12533587
	2-D12	3.270	GASKET KIT, INT MANIF (CONTAINS 8 GASKETS)	01-02	Y (LS6)	8	12533587

RPO DEFINITIONS
LS1 – ENGINE GAS, 8 CYL, 5.7L, SFI, ALUMINUM ENGINE
LS6 – ENGINE GAS, 8 CYL, 5.7L, SFI, ALUMINUM, HIGH OUTPUT

cardiagn.com

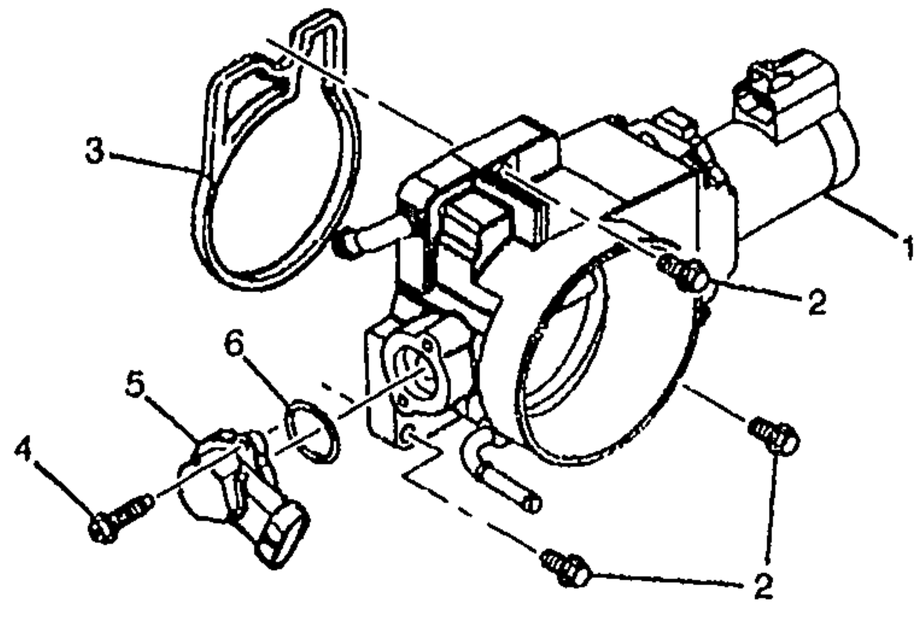

GM03-323Y

1997-2002 Y THROTTLE BODY (MODEL 118)(LS1/5.7G)
2001-2002 Y THROTTLE BODY (MODEL 118)(LS6/5.7S)

NOTE: THROTTLE BODY SERVICE AS A COMPLETE ASM-COMPONENTS NOT SERVICE

1.	2-D14	3.335	BODY, THROT (AC-DELCO #17113564)	97-99	Y (LS1)	1	17113564
	2-D14	3.336	BODY, THROT (INCLS:THROTTLE BODY SENSOR POSITION) (INCLS 4, 5, 6)	00-02	Y (LS1)	1	17113669
	2-D14	3.335	BODY, THROT (INCLS:THROTTLE BODY SENSOR POSITION) (INCLS 4, 5, 6)	01-02	Y (LS6)	1	17113669
2.		8.900	BOLT, METRIC HEX FLG HD (M6X1X30) (POR 9.8) (THROT BODY)	97-02		3	11514008
3.	2-D14	3.336	SEAL, THROT BODY	97-02	Y (LS1)	1	12552542
	2-D14	3.336	SEAL, THROT BODY	01-02	Y (LS6)	1	12552542
4.		N.S.	BOLT, THROT POSN SEN (PART OF 5)	97-99			
		N.S.	BOLT, THROT POSN SEN (PART OF 1)	00-01			
		N.S.	BOLT, THROT POSN SEN (PART OF 1)	02			
5.	2-D14	3.339	SENSOR KIT, THROT POSN (INCLS 4, 6) (AC-DELCO #17113566)	97-99	Y	1	17113566
		N.S.	SENSOR KIT, THROT POSN (PART OF 1)	00-01			
		N.S.	SENSOR KIT, THROT POSN (PART OF 1)	02			
6.		N.S.	SEAL, THROT POSN SEN LVR (PART OF 5)	97-99			
		N.S.	SEAL, THROT POSN SEN LVR (PART OF 1)	00-01			
		N.S.	SEAL, THROT POSN SEN LVR (PART OF 1)	02			

RPO DEFINITIONS

LS1 - ENGINE GAS, 8 CYL, 5.7L, SFI, ALUMINUM ENGINE

cardiagn.com

cardiagn.com

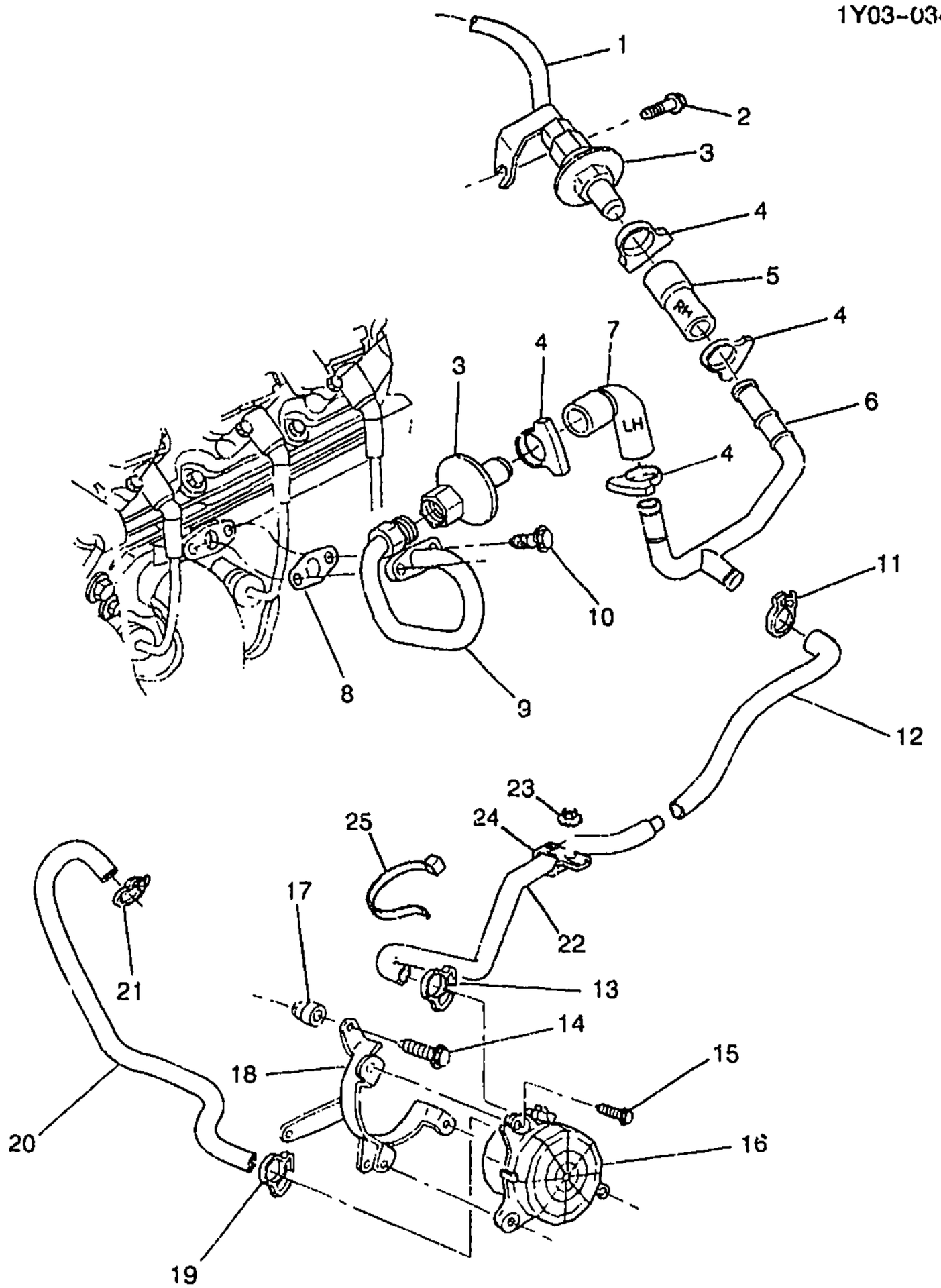

1Y03-034

1997-1999 Y A.I.R. PUMP & RELATED PARTS

1.	2-D21	3.675	PIPE, SECD AIR INJN (POSN #1) (AC-DELCO #219-204)	97-98	Y	RH	12553615
	2-D21	3.675	PIPE, SECD AIR INJN (INCLS NS NUT & FLANGE) (AC-DELCO #219-241)	99	Y	RH	12558995

© 2001 GENERAL MOTORS SERVICE PARTS OPERATIONS - CHEVROLET - 15Y

cardiagn.com

							1Y03-034
2.	2-D21	3.675	BOLT, SECD AIR INJN PIPE (POSN #2) (M10X1.5X20, 18 THD) (8.900)	97-99	Y	1	11515764
3.	2-D19	3.670	VALVE, SECD AIR INJN CHK (AC-DELCO #214-419)	97-99	Y (LS1)	2	22048212
4.	2-N13	1.166	CLAMP, SECD AIR INJN CHK VLV HOSE (1.762)	97-98	Y (LS1)	4	1623010
	2-N13	1.166	CLAMP, SECD AIR INJN CHK VLV HOSE (1.762)	99	Y	4	1623010
5.	2-D23	3.680	CONNECTOR, SECD AIR INJN PIPE (POSN #1, TO DOOR) (66.7MM LG) (STRAIGHT)	97-99	Y (LS1)	RH	12553612
6.	2-D21	3.675	PIPE, SECD AIR INJN (POSN #3) (AC-DELCO #219-206)	97-98	Y	1	12555053
	2-D21	3.675	PIPE, SECD AIR INJN (AC-DELCO #219-243)	99	Y	1	12558997
7.	2-D23	3.680	CONNECTOR, SECD AIR INJN PIPE	99	Y	LH	12558998
	2-D23	3.680	CONNECTOR, SECD AIR INJN PIPE (POSN #2, TO DOOR)	97-98	Y (LS1)	LH	12553614
8.	2-D23	3.680	GASKET, SECD AIR INJN PIPE	97-99	Y (LS1)	2	12553617
9.	2-D21	3.675	PIPE, SECD AIR INJN (POSN #2) (AC-DELCO #219-205)	97-98	Y	LH	12553616
	2-D21	3.675	PIPE, SECD AIR INJN (AC-DELCO #219-242)	99	Y	LH	12558996
10.	2-D21	3.675	BOLT, SECD AIR INJN PIPE (POSN #1) (M8X1.25X24.4) (20 THD) (0.056)	97-99	Y	4	12556127
11.	2-D21	3.675	CLAMP, SECD AIR INJN PUMP HOSE (UPR) (1.762)	97-99	Y (LS1)	1	1623010
12.	2-D21	3.675	HOSE, SECD AIR INJN PUMP (A.I.R. PMP OUT HOSE TO A.I.R. PIPE)	97	Y (LS1)	1	12557749
	2-D21	3.675	HOSE, SECD AIR INJN PUMP (A.I.R. PMP OUT HOSE TO A.I.R. PIPE)	98	Y (LS1) (EXC JAG)	1	12557749
	2-D21	3.675	HOSE, SECD AIR INJN PUMP (A.I.R. PMP OUT HOSE TO A.I.R. PIPE)	98	Y (LS1, JAG)	1	12558519
	2-D21	3.675	HOSE, SECD AIR INJN PUMP (A.I.R. PMP OUT HOSE TO A.I.R. PIPE)	99	Y (LS1)	1	12558519
13.	2-D21	3.675	CLAMP, SECD AIR INJN PUMP HOSE (LWR) (1.762)	97-99	Y (LS1)	1	1623010
14.		8.900	BOLT, W/WA (M6X1X25) (ENG BLK AIR INJN PUMP BRKT HOLE)	97-99		3	11514139
15.		8.977	BOLT, HEX W/WA, M6X1X35, 9.8, POR, 24 OD, ABPT (SECD AIR INJN PMP)	97-99		3	11513947
16.	2-D19	3.660	PUMP, SECD AIR INJN (AC-DELCO #215-345)	97-99	Y (LS1)	1	24505066
17.	2-D18	3.655	NUT, SECD AIR INJN PUMP BRKT (4.665)	97-99	Y (LS1)	3	10281487
18.	2-D18	3.655	BRACKET, SECD AIR INJN PUMP	97-99	Y (LS1)	1	12553608
19.	2-D23	3.680	CLAMP, SECD AIR INJN PUMP VCL HOSE (1.762)	97-99	Y (LS1)	1	1623010

cardiagn.com

							1Y03-034
20.	2-D21	3.675	HOSE, SECD AIR INJN PUMP A/CL (A/CL HOSE TO A.I.R. PMP IN)	97-99	Y (LS1)	1	12557748
21.		8.948	CLAMP, SIZE 6, .30MIN. - .87MAX - HEX/SLOTTED (SECD AIR INJN PMP A/CL HOSE)	97-99	.....	1	15620999
22.	2-D21	3.675	HOSE, SECD AIR INJN PUMP (A.I.R. PMP OUT TO A.I.R. PIPE HOSE TO PUMP)	97-99	Y (LS1)	1	12557750
	2-D23	3.680	CONNECTOR, SECD AIR INJN HOSE	97-99	Y	1	12555054
23.		8.917	NUT, HEX W/CON WA 6X1X5.5 16-OD ZP 9 (WSWA SOLV CNTNR)	97-99	.....	1	11517293
24.	2-D21	3.675	CLIP, SECD AIR INJN PUMP HOSE (1.166)	97-99	Y (LS1)	1	2012781
25.		8.965	STRAP, ADJ TIE (SECD AIR INJN PUMP HOSE) (AC-DELCO #12337820)	97-99	.....	1	12337820

RPO DEFINITIONS
JAG - BRAKE PROVISIONS ABS LOCATION
LS1 - ENGINE GAS, 8 CYL, 5.7L, SFI, ALUMINUM ENGINE

cardiagn.com

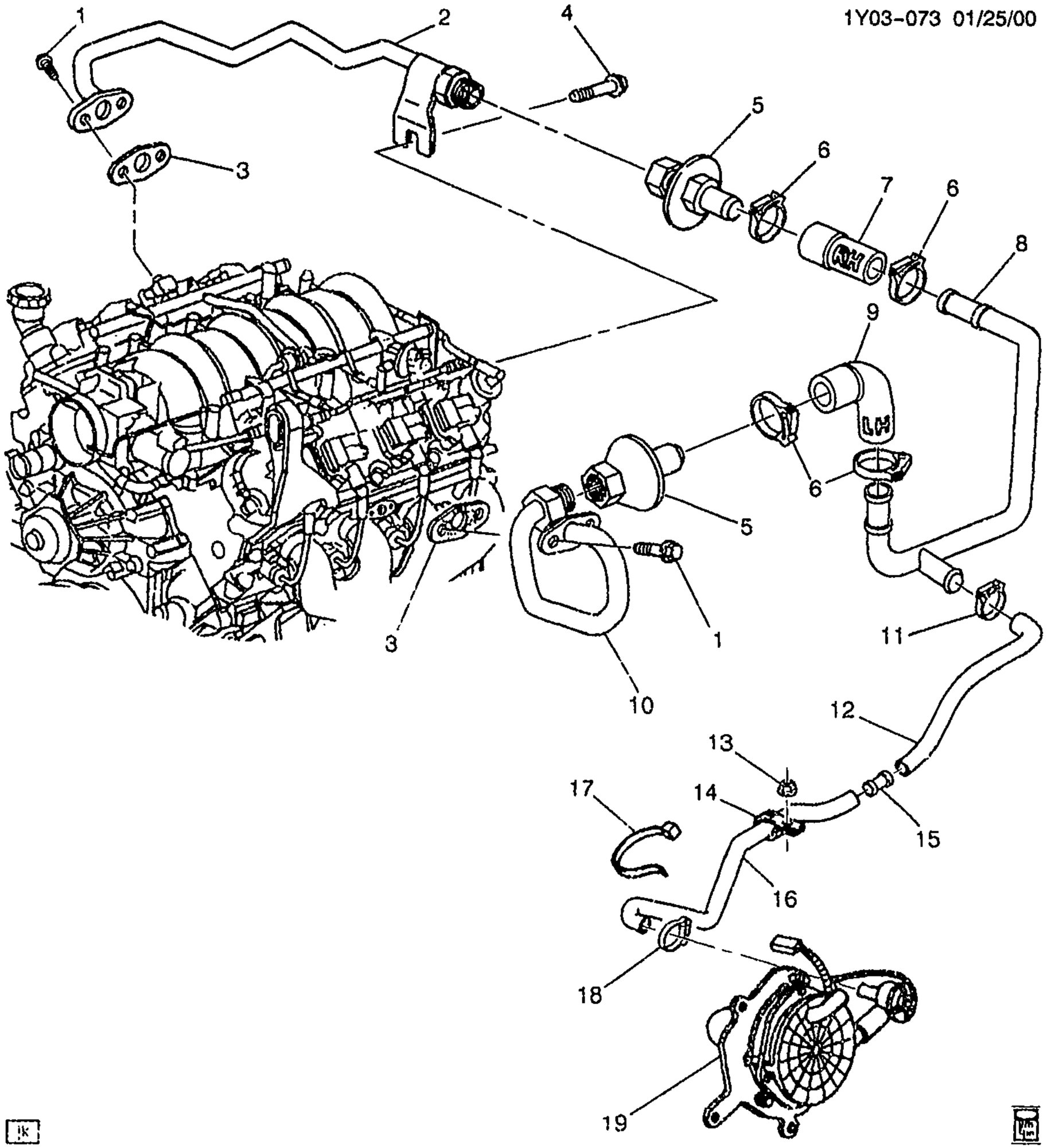

1Y03-073

2000-2002 Y A.I.R. PUMP & RELATED PARTS PART 1 HOSES & PIPES

1.	2-D21	3.675	BOLT, SECD AIR INJN PIPE (POSN #1) (M8X1.25X24.4) (20 THD) (0.056)	00-02	Y	4	12556127
2.	2-D21	3.675	PIPE, SECD AIR INJN (AC-DELCO #219-241)	00	Y (LS1)	RH	12558995
	2-D21	3.675	PIPE, SECD AIR INJN (AC-DELCO #219-346)	01-02	Y	RH	12561494

© 2001 GENERAL MOTORS SERVICE PARTS OPERATIONS-CHEVROLET-15Y

cardiagn.com

							1Y03-073
3.	2-D23	3.680	GASKET, SECD AIR INJN PIPE ..	00	Y (LS1)	2	12553617
	2-D23	3.680	GASKET, SECD AIR INJN PIPE ..	01-02	Y	2	12553617
4.	2-D21	3.675	BOLT, SECD AIR INJN PIPE (POSN #2) (M10X1.5X20, 18 THD) (8.900)	00-02	Y	1	11515764
5.	2-D19	3.670	VALVE, SECD AIR INJN CHK (AC-DELCO #214-419)	00	Y (LS1)	2	22048212
	2-D19	3.670	VALVE, SECD AIR INJN CHK (AC -DELCO #214-419)	01-02	Y	2	22048212
6.	2-N13	1.166	CLAMP, SECD AIR INJN CHK VLV HOSE (1.762)	00-02	Y	4	1623010
7.	2-D23	3.680	CONNECTOR, SECD AIR INJN PIPE (66.7MM LG) (STRAIGHT) ..	01-02	Y	RH	12553612
	2-D23	3.680	CONNECTOR, SECD AIR INJN PIPE (POSN #1, TO DOOR) (66.7MM LG) (STRAIGHT)	00	Y (LS1)	RH	12553612
8.	2-D21	3.675	PIPE, SECD AIR INJN (AC-DELCO #219-243)	00-02	Y	1	12558997
9.	2-D23	3.680	CONNECTOR, SECD AIR INJN PIPE	00-02	Y	LH	12558998
10.	2-D21	3.675	PIPE, SECD AIR INJN (AC-DELCO #219-242)	00	Y (LS1)	LH	12558996
	2-D21	3.675	PIPE, SECD AIR INJN (AC-DELCO #219-347)	01-02	Y	LH	12561495
11.		8.948	CLAMP, SIZE 6, .30MIN. - .87MAX - HEX/SLOTTED (SECD AIR INJN PUMP HOSE)	00-02	....	1	15620999
12.	2-D21	3.675	HOSE, SECD AIR INJN PUMP ...		Y	1	12558519
13.		8.917	NUT, HEX W/CON WA 6X1X5.5 16-OD ZP 9 (WSWA SOLV CNTNR)	00-02	.....	1	11517293
14.	2-D21	3.675	CLIP, SECD AIR INJN PUMP HOSE (1.166)	00	Y	1	2012781
	2-D21	3.675	CLIP, SECD AIR INJN PUMP HOSE	01-02	Y	1	10311858
15.	2-D23	3.680	CONNECTOR, SECD AIR INJN HOSE (PART OF 16)	00-02	Y	1	12555054
16.	2-D21	3.675	HOSE, SECD AIR INJN PUMP (INCLS 15)	00-02	Y	1	12559498
17.		8.965	STRAP, ADJ TIE (SECD AIR INJN PUMP HOSE) (AC-DELCO #12337820)	00-02	.....	1	12337820
18.		8.948	CLAMP, DIA 10-244MM (SECD AIR INJN PUMP HOSE)	00-02	.....	1	744243
19.		N.S.	PUMP, SECD AIR INJN (SEE "A.I.R. PUMP & RELATED PARTS-PART 2" FOR DETAILED ILLUSTRATED VIEW)		.....		

RPO DEFINITIONS
LS1 - ENGINE GAS, 8 CYL, 5.7L, SFI, ALUMINUM ENGINE

cardiagn.com

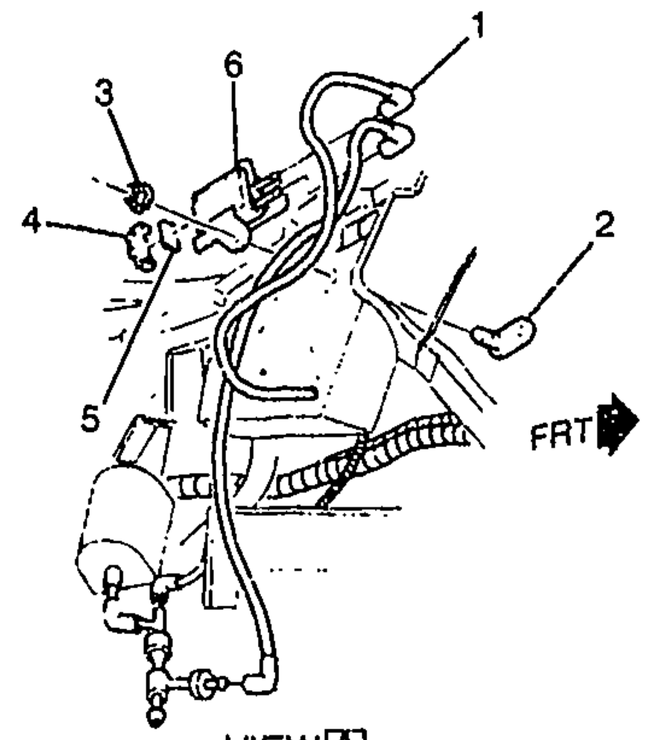

VIEW A

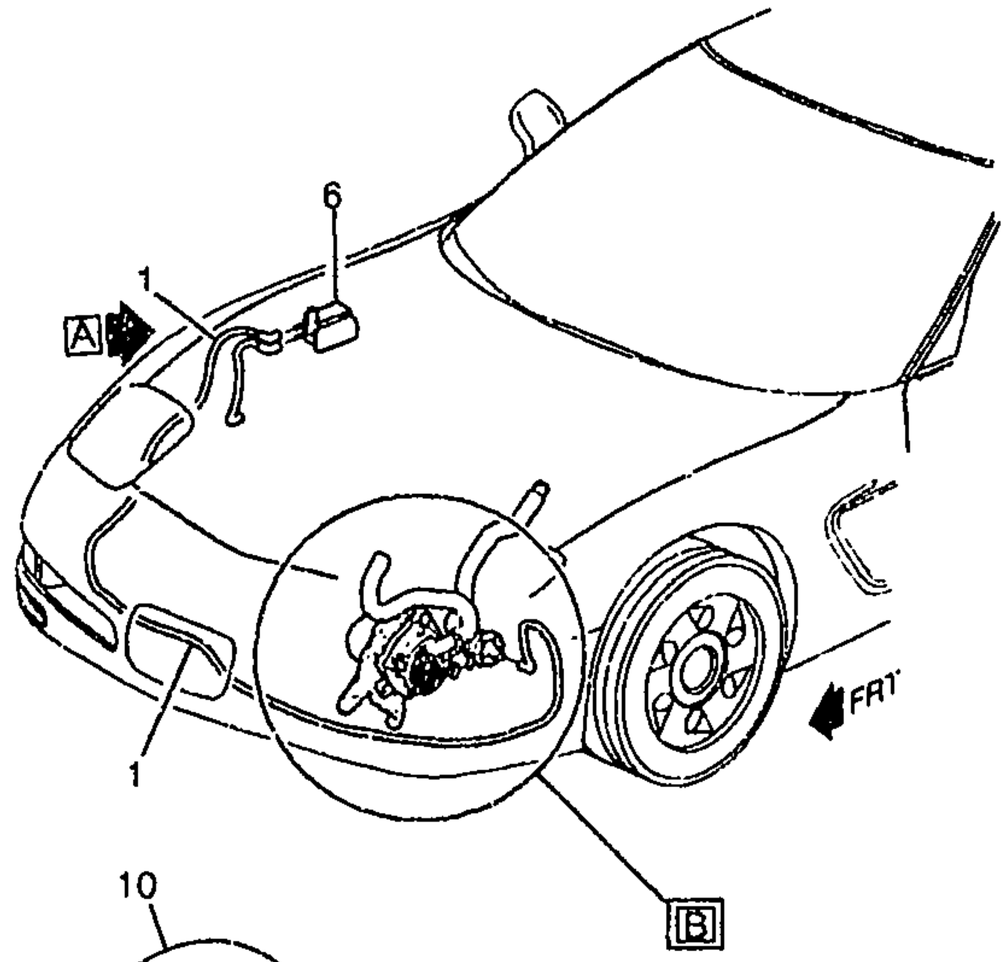

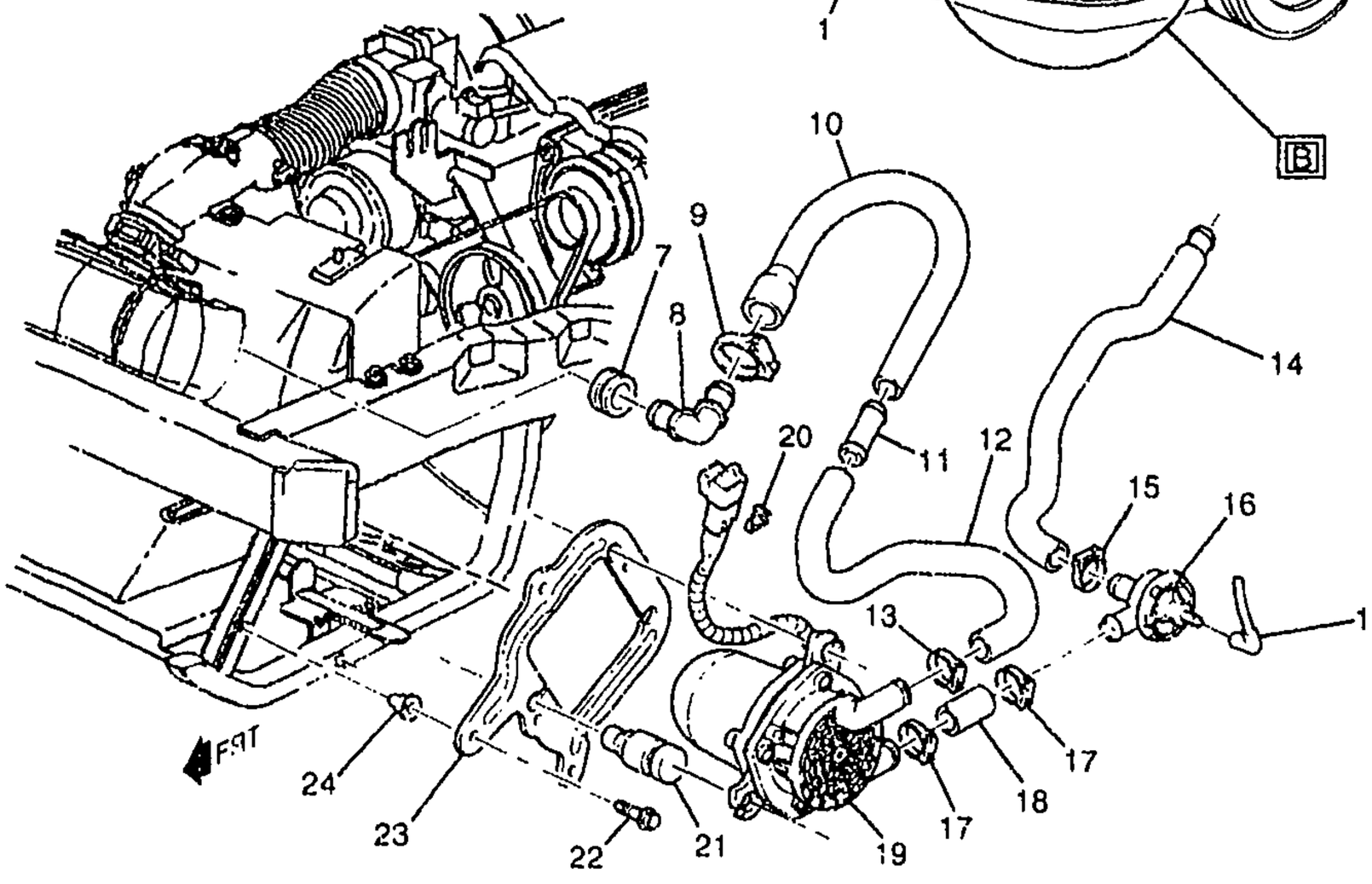

as

VIEW B

1Y03-074

2000-2002 Y A.I.R. PUMP & RELATED PARTS PART 2 PUMP & MOUNTING

1.	2-D21	3.675	HOSE, SECD AIR INJN SW VLV SOL VLV VAC (FWD LP WRG SECTION) (9.281) (COMES T/W HVAC VAC TK HOSE)	00	YY	1 15324846

© 2001 GENERAL MOTORS SERVICE PARTS OPERATIONS - CHEVROLET - 15Y

cardiagn.com

							1Y07-074
	2-N20	9.281	HOSE, HTR & A/C CONT VAC TK (ENG HARN SECTION)	01-02	Y (LS1)	1	12124136
	2-N20	9.281	HOSE, HTR & A/C CONT VAC TK (ENG HARN SECTION)	01-02	Y (LS6)	1	12124136
2.	2-D21	3.671	PLATE, SECD AIR INJN SW VLV SOL VLV SOL ANC (4.785)	00-02	Y	1	10404603
3.		8.917	NUT, HEX W/CON WA 6X1X5.5 16-OD ZP 9 (SECD AIR INJN SW VLV SOL)	00-02		1	11517293
4.	2-D21	3.671	CLAMP, EGR VAC REG SOL VLV FLTR (PART OF 6)	00-02	Y	1	1985088
5.	2-D21	3.671	FILTER, EGR VAC REG SOL VLV (PART OF 6) (AC-DELCO #219-14)	00-02	Y	1	1977796
6.	2-D19	3.670	SOLENOID, SECD AIR INJN SW VLV SOL VLV (INCLS 4, 5) (AC-DELCO #214-358)	00-02	Y	1	1997212
7.	2-D16	3.410	SEAL, A/CL HSG CVR	00	Y	1	25098174
	2-D15	3.407	GROMMET, A/CL AIR RSTN IND (3.410)	01-02	Y	1	25098174
8.	2-D23	3.680	CONNECTOR, SECD AIR INJN PUMP A/CL HOSE (PART OF 10) (1.762)	00-02	Y	1	1263193
9.		8.948	CLAMP, SIZE 6, .30MIN. - .87MAX - HEX/SLOTTED (SECD AIR INJN PUMP A/CL HOSE)	00-02		1	15620999
10.	2-D21	3.675	HOSE, SECD AIR INJN PUMP A/CL (A/CL TO SECD A.I.R. PMP IN HOSE) (INCLS 8, 11)	00-02	Y (LS1)	1	12557747
	2-D21	3.675	HOSE, SECD AIR INJN PUMP A/CL (A/CL TO SECD A.I.R. PMP IN HOSE) (INCLS 8, 11)	01-02	Y (LS6)	1	12557747
11.	2-D23	3.680	CONNECTOR, SECD AIR INJN PUMP A/CL HOSE (PART OF 10)	00-02	Y	1	12555054
12.	2-D21	3.675	HOSE, SECD AIR INJN PUMP A/CL	00-02	Y	1	12559493
13.		8.948	CLAMP, SIZE 6, .30MIN. - .87MAX - HEX/SLOTTED (SECD AIR INJN PUMP A/CL HOSE)	00-02		1	15620999
14.	2-D21	3.675	HOSE, SECD AIR INJN PUMP	00-02	Y	1	12559498
15.		8.948	CLAMP, SIZE 6, .30MIN. - .87MAX - HEX/SLOTTED (SECD AIR INJN SW VLV HOSE)	00-02		1	15620999
16.	2-D19	3.670	VALVE, SECD AIR INJN SHUTOFF (POA 12558522 KIT)	00	Y (LS1)	1	12558524
	2-D19	3.670	VALVE, SECD AIR INJN SHUTOFF (POA 12558522 KIT)	01-02	Y	1	12558524
17.		8.948	CLAMP, SIZE 6, .30MIN. - .87MAX - HEX/SLOTTED (SECD AIR INJN PUMP HOSE)	00-02		2	15620999
18.	2-D21	3.675	HOSE, SECD AIR INJN PUMP	00-02	Y	1	12559497
19.	2-D19	3.660	PUMP, SECD AIR INJN (AC-DELCO #215-426)	00-01	Y	1	12568382
	2-D19	3.660	PUMP, SECD AIR INJN (AC-DELCO #215-439)	02	Y	1	12568623
20.	2-B23	2.559	CLIP, SECD AIR INJN PMP WRG HARN	00-02	Y	1	12561498

cardiagn.com

							1Y03–074
21.	2–D18	3.655	INSULATOR, SECD AIR INJN PUMP BRKT	01–02	Y	3	24507759
	2–D18	3.655	INSULATOR, SECD AIR INJN PUMP BRKT (1ST DES USES BOLT–ON PUMP MOUNTING INSULATORS; FOR 2ND DES SEE 24507759) (CODE 7725)	00	Y (1ST DES)	3	15007725
	2–D18	3.655	INSULATOR, SECD AIR INJN PUMP BRKT (2ND DES USES PRESSED IN PUMP MOUNTING INSULATOR; FOR 1ST DES SEE 15007725 (INSULATOR), 15007726 (SPACER) & 15152297 (BOLT)	00	Y (2ND DES)	1	24507759
22.		8.900	BOLT, W/WA (M6X1X25) (ENG BLK AIR INJN PUMP BRKT HOLE)	00–02	.....	AR	11514139
23.	2–D18	3.655	BRACKET, SECD AIR INJN PUMP (MUST ALSO USE (3) 24507759 INSULATORS IF PUMP IS ORIGINALLY MOUNTED WITH BOLT–ON INSULATORS)	00–02	Y	1	12566934
	2–D18	3.655	BRACKET, SECD AIR INJN PUMP (MUST ALSO USE (3) 24507759 INSULATORS IF PUMP IS ORIGINALLY MOUNTED WITH BOLT–ON INSULATORS)	01–02	Y	1	12566934
24.	2–D18	3.655	NUT, SECD AIR INJN PUMP BRKT (4.665)	00–02	Y	3	10281487

RPO DEFINITIONS
LS1 – ENGINE GAS, 8 CYL, 5.7L, SFI, ALUMINUM ENGINE
LS6 – ENGINE GAS, 8 CYL, 5.7L, SFI, ALUMINUM, HIGH OUTPUT

cardiagn.com

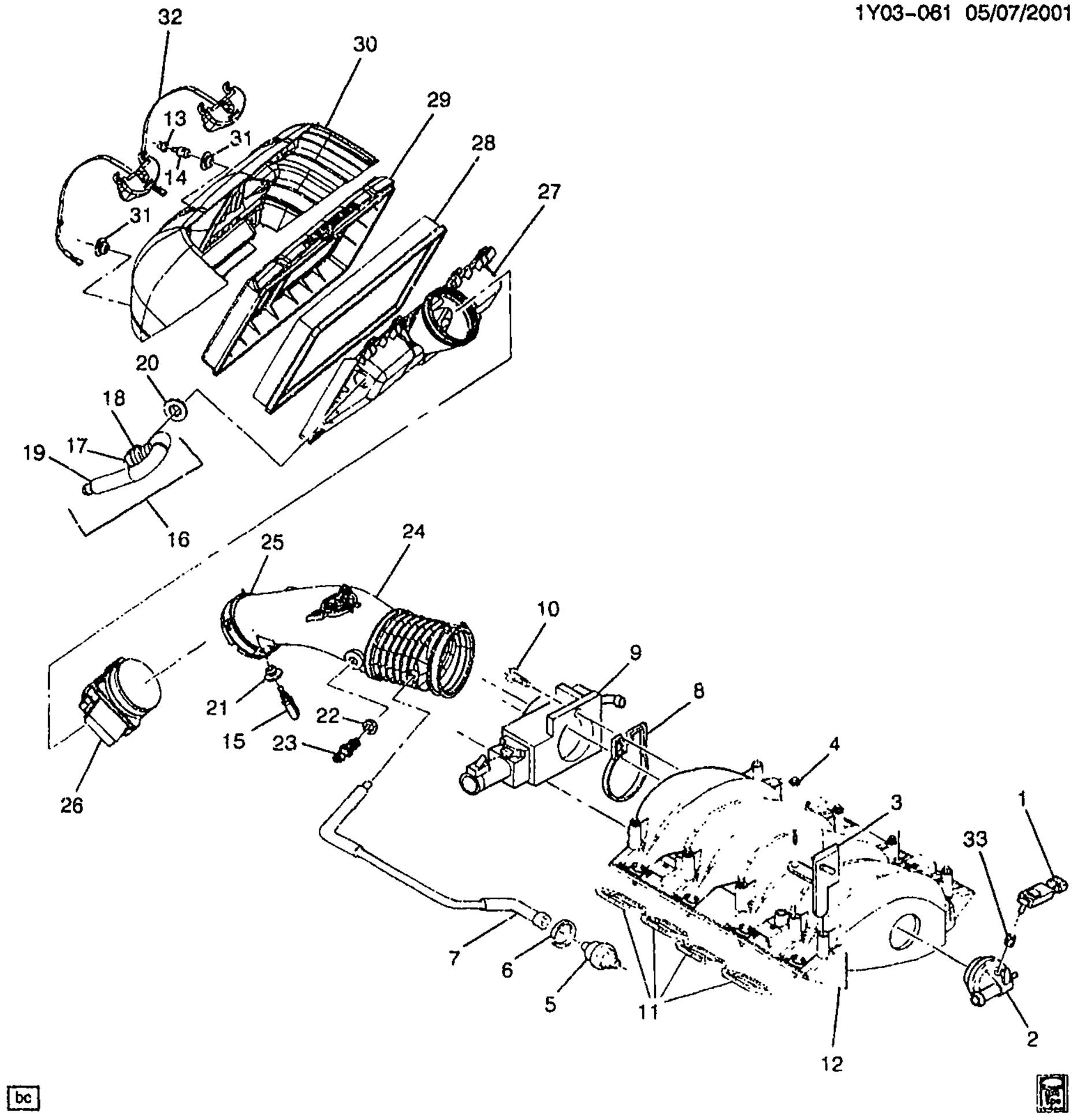

1Y03-061

1997-1998 Y AIR INTAKE SYSTEM (M30)
1997-1998 Y AIR INTAKE SYSTEM (MM6,EXC B4H)

1.	2-D24	3.682	SENSOR, MAP (W/SEAL) (AC-DELCO #213-331)	97-98 Y (LS1)	1	16212460
	2-D24	3.682	CONNECTOR, SEN-MAP (GRAY) (3-WAY F)	97-98 Y (LS1)	1	12129948
2.		N.S.	PLUG, MAP SEN HOLE	.....		

cardiagn.com

						1Y03–061	
3.	2–D13	3.330	BRACKET, F/INJN FUEL RL (ON INTAKE MANIFOLD BEHIND FUEL RAIL–STOP)	97–98	Y (LS1)	LH	12556074
	2–D13	3.330	BRACKET, F/INJN FUEL RL (90 DEG "S" TYPE BRKT)	97–98	Y (LS1)	RH	12560384
4.	2–D12	3.275	BOLT, INT MANIF (W/FLAT WASHER) (M6X1.0X21.8, 13.6 OD, GM500M, ZF, MACH, ADHES)	97–98	Y (LS1)	10	12552344
5.	2–D13	3.330	REGULATOR, FUEL PRESS (AC–DELCO #12554677)	97–98	Y (LS1)	1	12554677
6.	2–D13	3.330	RING, FUEL PRESS REG RET	97–98	Y (LS1)	1	24500246
7.	2–D13	3.330	TUBE, FUEL PRESS REG VAC	97–98	Y (LS1)	1	12557155
8.	2–D14	3.336	SEAL, THROT BODY	97–98	Y (LS1)	1	12552542
9.	2–D14	3.335	BODY, THROT (SEE GROUP 3.000 "THROTTLE BODY" FOR DETAILED ILLUSTRATED VIEW.) (AC–DELCO #17113564)	97–98	Y (LS1)	1	17113564
10.		8.900	BOLT, METRIC HEX FLG HD (M6X1X30) (POR 9.8) (THROT BODY)	97–98		3	11514008
11.	2–D12	3.270	GASKET KIT, INT MANIF (CONTAINS 8 GASKETS)	97–98	Y (LS1)	1	12533587
12.	2–D12	3.265	MANIFOLD, INT (SERV)	97–98	Y (LS1)	1	88894095
13.	2–D14	3.403	NUT, A/CL (TO FRT BMPR IMP BAR) (4.665)	97–98	Y (LS1)	2	10281487
14.	2–D14	3.403	RETAINER, A/CL (POSN #1) (M6X1.0X24) (T30 TORX)	97–98	Y (LS1)	2	12550385
15.	2–D14	3.403	RETAINER, A/CL (POSN #2)	97–98	Y (LS1)	2	25099299
16.	2–D21	3.675	HOSE, SECD AIR INJN PUMP A/CL (A/CL TO SECD A.I.R. PMP IN HOSE) (INCLS 17, 18, 19)	97–98	Y (LS1)	1	12557747
17.	2–D23	3.680	CONNECTOR, SECD AIR INJN PUMP A/CL HOSE (PART OF 16) (1.762)	97–98	Y	1	1263193
18.		8.948	CLAMP, SIZE 6, .30MIN. – .87MAX – HEX/SLOTTED (SECD AIR INJN PUMP A/CL HOSE) (PART OF 16)	97–98	(LS1)	1	15620999
19.		N.S.	CONNECTOR, SECD AIR INJN HOSE (PART OF 16)			1	12555054
20.	2–D16	3.410	SEAL, A/CL HSG CVR	97–98	Y (LS1) (GROMMET, ADAPTER, COVER)	1	25098174
21.	2–D15	3.40[illegible]	INSULATOR, A/CL HSG (30.0MM O.D.) (3.417)	97–98	Y (LS1)	2	25176248
22.	2–D16	3.415	GROMMET, INT AIR TEMP SEN	97–98	Y (LS1)	1	24504388
23.	2–D24	3.682	SENSOR, INT AIR TEMP (AC–DELCO #213–243)	97–98	Y (LS1)	1	12160244
24.	2–D15	3.407	DUCT, A/CL OTLT RR (W/INT AIR TEMP SEN)	97	Y (LS1, MM6) (EXC B4H)	1	25179366
	2–D15	3.407	DUCT, A/CL OTLT RR (W/INT AIR TEMP SEN)	97	Y (LS1, M30)	1	25179366
	2–D15	3.407	DUCT, A/CL OTLT RR (W/INT AIR TEMP SEN) (CUT HOLE IF AIR RESTRICTION INDICATOR IS USED.)	98	Y (LS1)	1	25179366
25.	2–D24	3.682	SEAL, MASS AIR FLOW SEN	97–98	Y (LS1)	1	25099771

cardiagn.com

26.	2–D24	3.682	SENSOR, MASS AIRFLOW (AC–DELCO #213–353)	97–98	Y (LS1)	1	25179711
		N.S.	CONNECTOR, SEN–MASS AIRFLOW		.....		
27.	2–D16	3.410	COVER, A/CL HSG	97–98	Y (LS1)	1	25147318
28.	2–D16	3.410	ELEMENT, A/CL (PAPER) (AC–DELCO #A917C)	97–98	Y (LS1)	1	25042562
29.	2–D15	3.406	HOUSING, A/CL	97–98	Y (LS1)	1	25147310
30.	2–D16	3.417	DUCT, FRT INT AIR	97–98	Y (LS1)	1	25166558
31.	2–D15	3.405	INSULATOR, A/CL HSG (30.0MM O.D.) (3.417)	97–98	Y (LS1)	2	25176248
32.	2–D15	3.407	CLAMP, A/CL	97–98	Y (LS1)	1	25166560
33.	2–D24	3.682	SEAL, MAP SEN	97–98	Y (LS1)	1	16194007

RPO DEFINITIONS
B4H – MODIFICATION–NOISE CONTROL, EXPORT
LS1 – ENGINE GAS, 8 CYL, 5.7L, SFI, ALUMINUM ENGINE
MM6 – TRANSMISSION MAN 6 SPD, BORG WARNER, 85MM, 1ST 2.66, 6TH 0.50, O/D
M30 – TRANSMISSION,AUTOMATIC 4 SPEED,4L60E,ELECTRONIC

cardiagn.com

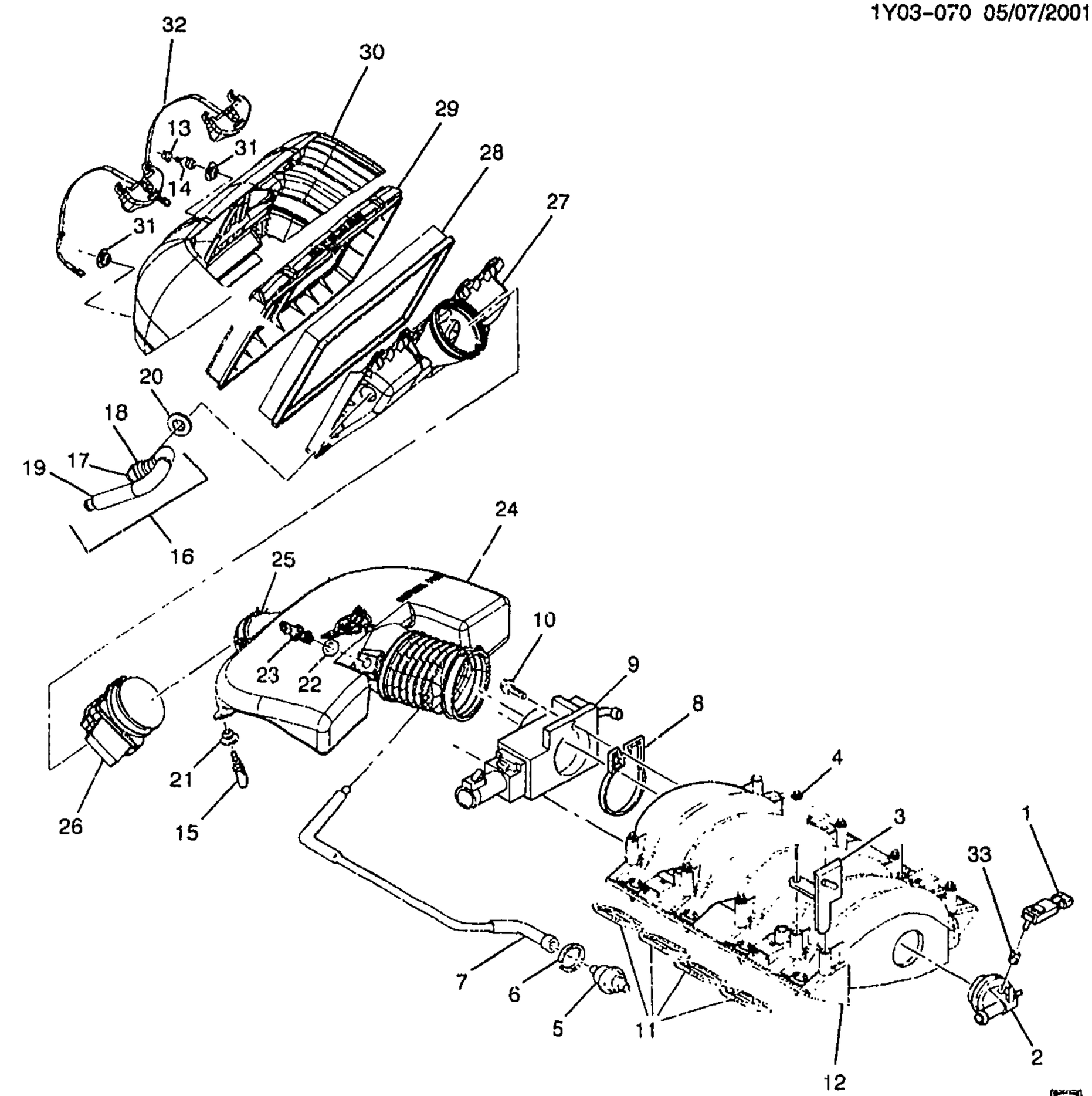

bc

1Y03-070

1997-1998 Y AIR INTAKE SYSTEM (EXPORT)(MM6,B4H)

1.	2-D24	3.682	SENSOR, MAP (W/SEAL) (AC-DELCO #213-331)	97-98	Y (LS1)	1	16212460
	2-D24	3.682	CONNECTOR, SEN-MAP (GRAY) (3-WAY F)	97-98	Y (LS1)	1	12129946
2.		N.S.	PLUG, MAP SEN HOLE		.....		
3.	2-D13	3.330	BRACKET, F/INJN FUEL RL (ON INTAKE MANIFOLD BEHIND FUEL RAIL-STOP)	97-98	Y (LS1)	LH	12556074

cardiagn.com

	2–D13	3.330	BRACKET, F/INJN FUEL RL (90 DEG "S" TYPE BRKT)	97–98	Y (LS1)	RH	12560384
4.	2–D12	3.275	BOLT, INT MANIF (W/FLAT WASHER) (M6X1.0X21.8, 13.6 OD, GM500M, ZF, MACH ADHES)	97–98	Y (LS1)	10	12552344
5.	2–D13	3.330	REGULATOR, FUEL PRESS (AC–DELCO #12554677)	97–98	Y (LS1)	1	12554677
6.	2–D13	3.330	RING, FUEL PRESS REG RET	97–98	Y (LS1)	1	24500246
7.	2–D13	3.330	TUBE, FUEL PRESS REG VAC	97–98	Y (LS1)	1	12557155
8.	2–D14	3.336	SEAL, THROT BODY	97–98	Y (LS1)	1	12552542
9.	2–D14	3.335	BODY, THROT (SEE GROUP 3.000 "THROTTLE BODY" FOR DETAILED ILLUSTRATED VIEW.) (AC–DELCO #17113564)	97–98	Y (LS1)	1	17113564
10.	2–D14	3.336	BOLT, THROT BODY (M6X1.0X30) (8.900)	97–98	Y (LS1)	3	11514008
11.	2–D12	3.270	GASKET KIT, INT MANIF (CONTAINS 8 GASKETS)	97–98	Y (LS1)	1	12533587
12.	2–D12	3.265	MANIFOLD, INT (SERV)	97–98	Y (LS1)	1	88894095
13.	2–D14	3.403	NUT, A/CL (TO FRT BMPR IMP BAR) (4.665)	97–98	Y (LS1)	2	10281487
14.	2–D14	3.403	RETAINER, A/CL (POS#1) (M6X1.0X24) (T30 TORX)	97–98	Y (LS1)	2	12550385
15.	2–D14	3.403	RETAINER, A/CL (POS #2)	97–98	Y (LS1)	2	25099299
16.	2–D21	3.675	HOSE, SECD AIR INJN PUMP A/CL (A/CL TO SECD A.I.R. PMP IN HOSE) (INCLS 17, 18, 19)	97–98	Y (LS1)	1	12557747
17.	2–D23	3.680	CONNECTOR, SECD AIR INJN PUMP A/CL HOSE (PART OF 16) (1.762)	97–98	Y	1	1263193
18.		8.948	CLAMP, SIZE 6, .30MIN. – .87MAX – HEX/SLOTTED (SECD AIR INJN PUMP A/CL HOSE) (PART OF 16)	97–98	(LS1)	1	15620999
19.		N.S.	CONNECTOR, SECD AIR INJN HOSE (PART OF 16)		Y (LS1)	1	12555054
20.	2–D16	3.410	SEAL, A/CL HSG CVR	97–98	Y (LS1) (GROMMET, ADAPTER, COVER)	1	25098174
21.	2–D15	3.405	INSULATOR, A/CL HSG (30.0MM O.D.) (3.417)	97–98	Y (LS1)	2	25176248
22.	2–D16	3.415	GROMMET, INT AIR TEMP SEN	97–98	Y (LS1)	1	24504388
23.	2–D24	3.682	SENSOR, INT AIR TEMP (AC–DELCO #213–243)	97–98	Y (LS1)	1	12160244
24.	2–D15	3.407	DUCT, A/CL OTLT RR (W/INT AIR TEMP SEN) (CUT HOLE IF AIR RESTRICTION INDICATOR IS USED.)	98	Y (LS1)	1	25179366
	2–D15	3.407	DUCT, A/CL OTLT RR (W/INT AIR TEMP SEN)	97	Y (LS1, MM6, B4H) (EXPORT)	1	25169371
25.	2–D24	3.682	SEAL, MASS AIR FLOW SEN	97–98	Y (LS1)	1	25099771
26.	2–D24	3.682	SENSOR, MASS AIRFLOW (AC–DELCO #213-353)	97–98	Y (LS1)	1	25179711
		N.S.	CONNECTOR, SEN–MASS AIRFLOW				
27.	2–D16	3.410	COVER, A/CL HSG	97–98	Y (LS1)	1	25147318
28.	2–D16	3.410	ELEMENT, A/CL (PAPER) (AC–DELCO #A917C)	97–98	Y (LS1)	1	25042562

cardiagn.com

29.	2–D15	3.406	HOUSING, A/CL	97–98	Y (LS1)	1	25147310
30.	2–D16	3.417	DUCT, FRT INT AIR	97–98	Y (LS1)	1	25166558
31.	2–D15	3.405	INSULATOR, A/CL HSG (30.0MM O.D.) (3.417)	97–98	Y (LS1)	2	25176248
32.	2–D15	3.407	CLAMP, A/CL	97–98	Y (LS1)	1	25166560
33.	2–D24	3.682	SEAL, MAP SEN	97–98	Y (LS1)	1	16194007

RPO DEFINITIONS
B4H – MODIFICATION–NOISE CONTROL, EXPORT
LS1 – ENGINE GAS, 8 CYL, 5.7L, SFI, ALUMINUM ENGINE
MM6 – TRANSMISSION MAN 6 SPD, BORG WARNER, 85MM, 1ST 2.66, 6TH 0.50, O/D

cardiagn.com

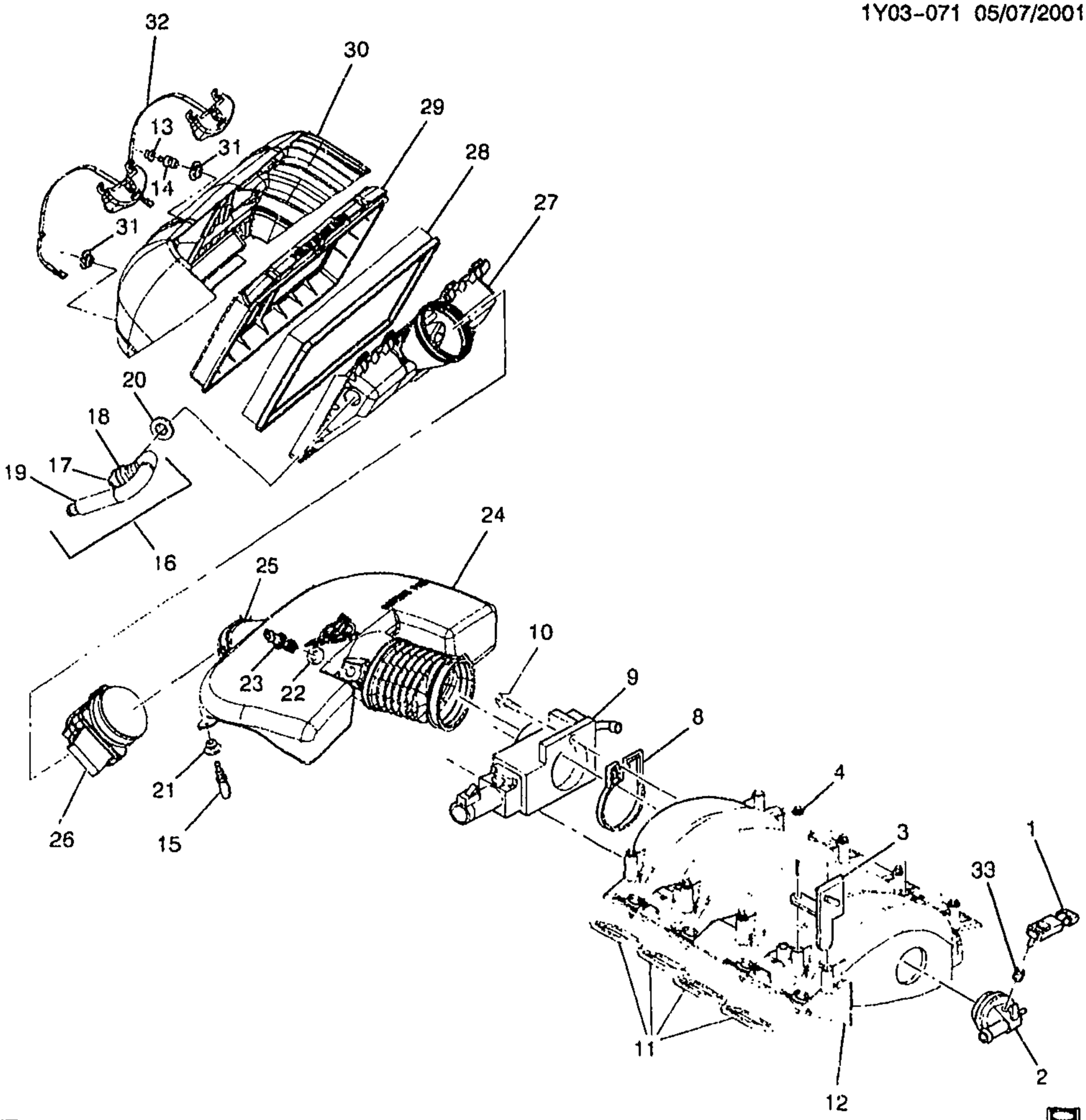

bc

1Y03-071

1999-2000 Y AIR INTAKE SYSTEM (EXPORT)(MM6,B4H)

1.	2-D24	3.682	SENSOR, MAP (W/SEAL) (AC-DELCO #213-331)	99-00	Y (LS1)	1	16212460
	2-D24	3.682	CONNECTOR, SEN-MAP (GRAY) (3-WAY F)	99-00	Y (LS1)	1	12129946
2.		N.S.	PLUG, MAP SEN HOLE		.....		
3.	2-D13	3.330	BRACKET, F/INJN FUEL RL (ON INTAKE MANIFOLD BEHIND FUEL RAIL-STOP)	99-00	Y (LS1)	LH	12556074

cardiagn.com

	2-D13	3.330	BRACKET, F/INJN FUEL RL (90 DEG "S" TYPE BRKT)	99-00	Y (LS1)	RH	12560384
4.	2-D12	3.275	BOLT, INT MANIF (W/FLAT WASHER) (M6X1.0X21.8, 13.6 OD, GM500M, ZF, MACH, ADHES)	99-00	Y (LS1)	10	12552344
8.	2-D14	3.336	SEAL, THROT BODY	99-00	Y (LS1)	1	12552542
9.	2-D14	3.335	BODY, THROT (SEE GROUP 3.000 "THROTTLE BODY" FOR DETAILED ILLUSTRATED VIEW.) (AC-DELCO #17113564)	99	Y (LS1)	1	17113564
	2-D14	3.335	BODY, THROT (INCLS:THROTTLE BODY SENSOR POSITION) (SEE GROUP 3.000 "THROTTLE BODY" FOR DETAILED ILLUSTRATED VIEW.)	00	Y (LS1)	1	17113669
10.		8.900	BOLT, METRIC HEX FLG HD (M6X1X30) (POR 9.8) (THROT BODY)	99-00		3	11514008
11.	2-D12	3.270	GASKET KIT, INT MANIF (CONTAINS 8 GASKETS)	99-00	Y (LS1)	1	12533587
12.	2-D12	3.265	MANIFOLD, INT (SERV)	99-00	Y (LS1)	1	88894095
13.	2-D14	3.403	NUT, A/CL (TO FRT BMPR IMP BAR) (4.665)	99-00	Y (LS1)	2	10281487
14.	2-D14	3.403	RETAINER, A/CL (POSN #1) (M6X1.0X24) (T30 TORX)	99-00	Y	2	12550385
15.	2-D14	3.403	RETAINER, A/CL (POSN #2)	99-00	Y	2	25099299
16.	2-D21	3.675	HOSE, SECD AIR INJN PUMP A/CL (A/CL TO SECD A.I.R. PMP IN HOSE) (INCLS 17, 18, 19)	99-00	Y (LS1)	1	12557747
17.	2-D23	3.680	CONNECTOR, SECD AIR INJN PUMP A/CL HOSE (90 DEGREE) (PART OF 16) (1.762)	99-00	Y	1	1263193
18.		8.948	CLAMP, SIZE 6, .30MIN. - .87MAX - HEX/SLOTTED (SECD AIR INJN PUMP A/CL HOSE) (PART OF 16)	99-00	Y	1	15620999
19.	2-D23	3.680	CONNECTOR, SECD AIR INJN HOSE (STRAIGHT) (PART OF 16)	99-00	Y	1	12555054
20.	2-D16	3.410	SEAL, A/CL HSG CVR	99-00	Y (GROMMET, ADAPTER, COVER)	1	25098174
21.	2-D15	3.405	INSULATOR, A/CL HSG (30.0MM O.D.) (3.417)	99-00	Y (LS1)	2	25176248
22.	2-D16	3.415	GROMMET, INT AIR TEMP SEN	99-00	Y (LS1)	1	24504388
23.	2-D24	3.682	SENSOR, INT AIR TEMP (AC-DELCO #213-243)	99-00	Y (LS1)	1	12160244
24.	2-D15	3.407	DUCT, A/CL OTLT (W/RESO & INT AIR TEMP SEN)	99-00	Y (LS1, M30)	1	25179366
	2-D15	3.407	DUCT, A/CL OTLT (W/RESO & INT AIR TEMP SEN)	99-00	Y (LS1, MM6, B4H) (EXPORT)	1	25179368
25.	2-D24	3.682	SEAL, MASS AIR FLOW SEN	99-00	Y (LS1)	1	25099771
26.	2-D24	3.682	SENSOR, MASS AIRFLOW (AC-DELCO #213-353)	99-00	Y (LS1)	1	25179711
		N.S.	CONNECTOR, SEN-MASS AIRFLOW				
27.	2-D16	3.410	COVER, A/CL HSG	99-00	Y (LS1)	1	25147318

cardiagn.com

28.	2–D16	3.410	ELEMENT, A/CL (PAPER) (AC–DELCO #A917C)	99–00	Y (LS1)	1	25042562
29.	2–D15	3.406	HOUSING, A/CL	99–00	Y (LS1)	1	25147310
30.	2–D16	3.417	DUCT, FRT INT AIR	99–00	Y (LS1)	1	25166558
31.	2–D15	3.405	INSULATOR, A/CL HSG (30.0MM O.D.) (3.417)	99–00	Y (LS1)	2	25176248
32.	2–D15	3.407	CLAMP, A/CL	99–00	Y (LS1)	1	25166560
33.	2–D24	3.682	SEAL, MAP SEN	99–00	Y (LS1)	1	16194007

RPO DEFINITIONS
B4H – MODIFICATION–NOISE CONTROL, EXPORT
LS1 – ENGINE GAS, 8 CYL, 5.7L, SFI, ALUMINUM ENGINE
MM6 – TRANSMISSION MAN 6 SPD, BORG WARNER, 85MM, 1ST 2.66, 6TH 0.50, O/D
M30 – TRANSMISSION,AUTOMATIC 4 SPEED,4L60E,ELECTRONIC

cardiagn.com

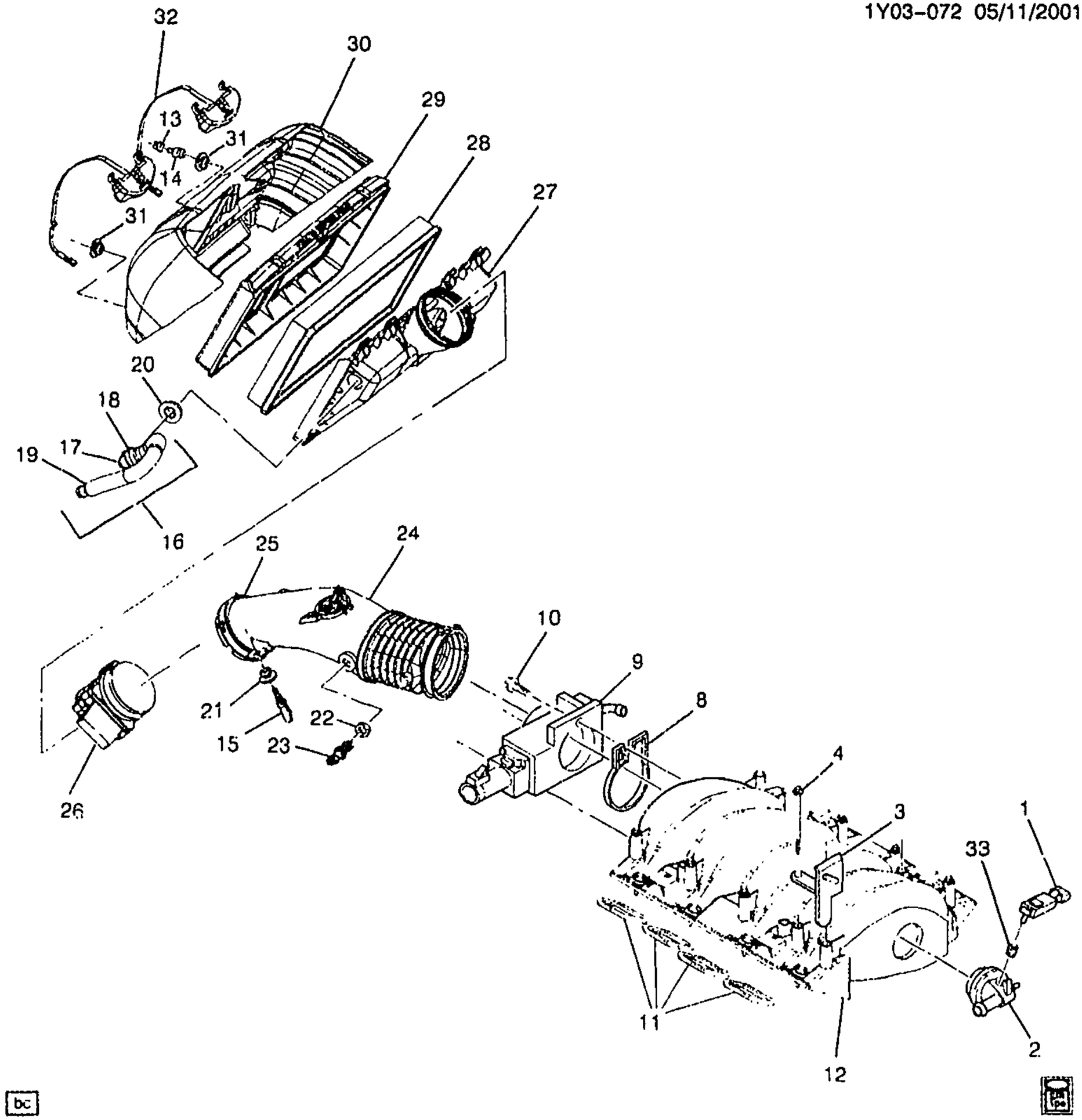

1Y03-072

1999-2000 Y AIR INTAKE SYSTEM (M30)
1999-2000 Y AIR INTAKE SYSTEM (MM6,EXC B4H)

1.	2-D24	3.682	SENSOR, MAP (W/SEAL) (AC-DELCO #213-331)	99-00 Y (LS1)	1	16212460
	2-D24	3.682	CONNECTOR, SEN-MAP (GRAY) (3-WAY F)	99-00 Y (LS1)	1	12129946
2.		N.S.	PLUG, MAP SEN HOLE	.. ..		

cardiagn.com

			INTAKE MANIFOLD BEHIND FUEL RAIL–STOP)				
	2–D13	3.330	BRACKET, F/INJN FUEL RL (90 DEG "S" TYPE BRKT)	99–00	Y (LS1)	RH	12560384
4.	2–D12	3.275	BOLT, INT MANIF (W/FLAT WASHER) (M6X1.0X21.8, 13.6 OD, GM500M, ZF, MACH, ADHES)	99–00	Y (LS1)	10	12552344
8.	2–D14	3.336	SEAL, THROT BODY	99–00	Y (LS1)	1	12552542
9.	2–D14	3.335	BODY, THROT (SEE GROUP 3.000 "THROTTLE BODY" FOR DETAILED ILLUSTRATED VIEW.) (AC–DELCO #17113564)	99	Y (LS1)	1	17113564
	2–D14	3.335	BODY, THROT (INCLS:THROTTLE BODY SENSOR POSITION) (SEE GROUP 3.000 "THROTTLE BODY" FOR DETAILED ILLUSTRATED VIEW.)	00	Y (LS1)	1	17113669
10.		8.900	BOLT, METRIC HEX FLG HD (M6X1X30) (POR 9.8) (THROT BODY)	99–00	.....	3	11514008
11.	2–D12	3.270	GASKET KIT, INT MANIF (CONTAINS 8 GASKETS)	99–00	Y (LS1)	1	12533587
12.	2–D12	3.265	MANIFOLD, INT (SERV)	99–00	.....		88894095
13.	2–D14	3.403	NUT, A/CL (TO FRT BMPR IMP BAR) (4.665)	99–00	Y (LS1)	2	10281487
14.	2–D14	3.403	RETAINER, A/CL (POSN #1) (M6X1.0X24) (T30 TORX)	99–00	Y	2	12550385
15.	2–D14	3.403	RETAINER, A/CL (POSN #2)	99–00	Y	2	25099299
16.	2–D21	3.675	HOSE, SECD AIR INJN PUMP A/CL (A/CL TO SECD A.I.R. PMP IN HOSE) (INCLS 17, 18, 19)	99–00	Y (LS1)	1	12557747
17.	2–D23	3.680	CONNECTOR, SECD AIR INJN PUMP A/CL HOSE (90 DEGREE) (PART OF 16) (1.762)	99–00	Y	1	1263193
18.		8.948	CLAMP, SIZE 6, .30MIN. – .87MAX – HEX/SLOTTED (SECD AIR INJN PUMP A/CL HOSE) (PART OF 16)	99–00	Y	1	15620999
19.	2–D23	3.680	CONNECTOR, SECD AIR INJN HOSE (STRAIGHT) (PART OF 16)	99–00	Y	1	12555054
20.	2–D16	3.410	SEAL, A/CL HSG CVR	99–00	Y (GROMMET, ADAPTER, COVER) ...	1	25098174
21.	2–D15	3.405	INSULATOR, A/CL HSG (30.0MM O.D.) (3.417)	99–00	Y (LS1)	2	25176248
22.	2–D16	3.415	GROMMET, INT AIR TEMP SEN .	99–00	Y (LS1)	1	24504388
23.	2–D24	3.682	SENSOR, INT AIR TEMP (AC–DELCO #213–243)	99–00	Y (LS1)	1	12160244
24.	2–D15	3.407	DUCT, A/CL OTLT (W/RESO & INT AIR TEMP SEN)	99–00	Y (LS1, MM6) (EXC B4H)	1	25179366
	2–D15	3.407	DUCT, A/CL OTLT (W/RESO & INT AIR TEMP SEN)	99–00	Y (LS1, M30)	1	25179366
25.	2–D24	3.682	SEAL, MASS AIR FLOW SEN	99–00	Y (LS1)	1	25099771
26.	2–D24	3.682	SENSOR, MASS AIRFLOW (AC–DELCO #213–353)	99–00	Y (LS1)	1	25179711

cardiagn.com

			AIRFLOW				
27.	2–D16	3.410	COVER, A/CL HSG	99–00	Y (LS1)	1	25147318
28.	2–D16	3.410	ELEMENT, A/CL (PAPER) (AC–DELCO #A917C)	99–00	Y (LS1)	1	25042562
29.	2–D15	3.406	HOUSING, A/CL	99–00	Y (LS1)	1	25147310
30.	2–D16	3.417	DUCT, FRT INT AIR	99–00	Y (LS1)	1	25166558
31.	2–D15	3.405	INSULATOR, A/CL HSG (30.0MM O.D.) (3.417)	99–00	Y (LS1)	2	25176248
32.	2–D15	3.407	CLAMP, A/CL	99–00	Y (LS1)	1	25166560
33.	2–D24	3.682	SEAL, MAP SEN	99–00	Y (LS1)	1	16194007

RPO DEFINITIONS
B4H – MODIFICATION–NOISE CONTROL, EXPORT
LS1 – ENGINE GAS, 8 CYL, 5.7L, SFI, ALUMINUM ENGINE
MM6 – TRANSMISSION MAN 6 SPD, BORG WARNER, 85MM, 1ST 2.66, 6TH 0.50, O/D
M30 – TRANSMISSION,AUTOMATIC 4 SPEED,4L60E,ELECTRONIC

cardiagn.com

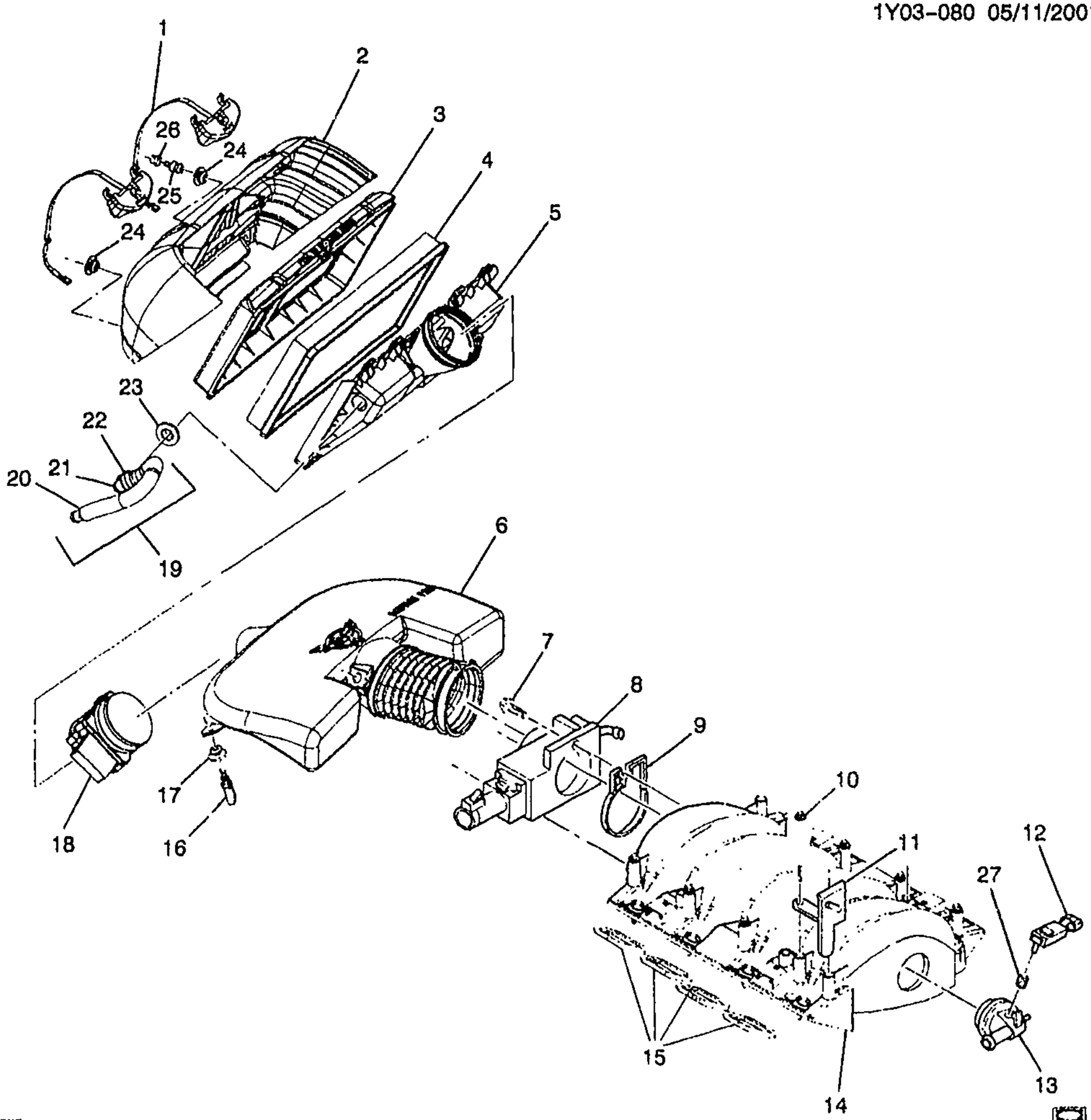

bc

1Y03-080

2001-2002 Y AIR INTAKE SYSTEM (EXPORT)(MM6,B4H)

1.	2-D15	3.407	CLAMP, A/CL	01-02	Y (LS1, B4H) (EXPORT)	1 25314816
2.	2-D16	3.417	DUCT, FRT INT AIR	01-02	Y (LS1)	1 25314814
3.	2-D15	3.406	HOUSING, A/CL	01-02	Y (LS1)	1 25314818
4.	2-D16	3.410	ELEMENT, A/CL (PAPER) (AC-DELCO #A917C)	01-02	Y (LS1)	1 25042562
5.	2-D16	3.410	COVER, A/CL HSG	01-02	Y (LS1)	1 25315957
6.	2-D15	3.407	DUCT, A/CL OTLT (W/RESO & INT AIR TEMP SEN)	01-02	Y (LS1)	1 25314823

cardiagn.com

7.		8.900	BOLT, METRIC HEX FLG HD (M6X1X30) (POR 9.8) (THROT BODY)	01–02		3	11514008
8.	2–D14	3.335	BODY, THROT (INCLS:THROTTLE BODY SENSOR POSITION) (SEE GROUP 3.000 "THROTTLE BODY" FOR DETAILED ILLUSTRATED VIEW.)	01–02	Y (LS1)	1	17113669
9.	2–D14	3.336	SEAL, THROT BODY	01–02	Y (LS1)	1	12552542
10.	2–D12	3.275	BOLT, INT MANIF (W/FLAT WASHER) (M6X1.0X21.8, 13.6 OD, GM500M, ZF, MACH, ADHES)	01–02	Y (LS1)	10	12552344
11.	2–D13	3.330	BRACKET, F/INJN FUEL RL (ON INTAKE MANIFOLD BEHIND FUEL RAIL–STOP)	01–02	Y (LS1)	LH	12556074
	2–D13	3.330	BRACKET, F/INJN FUEL RL (90 DEG "S" TYPE BRKT)	01–02	Y (LS1)	RH	12560384
12.	2–D24	3.682	SENSOR, MAP (W/SEAL) (AC–DELCO #213–331)	01–02	Y (LS1)	1	16212460
	2–D24	3.682	CONNECTOR, SEN–MAP (GRAY) (3–WAY F)	01–02	Y (LS1)	1	12129946
13.		N.S.	PLUG, MAP SEN HOLE				
14.	2–D12	3.265	MANIFOLD, INT	01–02			88890524
15.	2–D12	3.270	GASKET KIT, INT MANIF (CONTAINS 8 GASKETS)	01–02	Y (LS1)	1	12533587
16.	2–D14	3.403	RETAINER, A/CL (POSN #2)	01–02	Y	2	25099299
17.	2–D15	3.405	INSULATOR, A/CL HSG (30.0MM O.D.) (3.417)	01–02	Y (LS1)	2	25176248
18.	2–D24	3.682	SENSOR, MASS AIRFLOW (AC–DELCO #213–364)	01–02	Y	1	25318411
		N.S.	CONNECTOR, SEN–MASS AIRFLOW				
19.	2–D21	3.675	HOSE, SECD AIR INJN PUMP A/CL (A/CL TO SECD A.I.R. PMP IN HOSE) (INCLS 17, 18, 19)	01–02	Y (LS1)	1	12557747
20.	2–D23	3.680	CONNECTOR, SECD AIR INJN HOSE (STRAIGHT) (PART OF 16)	01–02	Y	1	12555054
21.	2–D23	3.680	CONNECTOR, SECD AIR INJN PUMP A/CL HOSE (90 DEGREE) (PART OF 16) (1.762)	01–02	Y	1	1263193
22.		8.948	CLAMP, SIZE 6, .30MIN. – .87MAX – HEX/SLOTTED (SECD AIR INJN PUMP A/CL HOSE) (PART OF 16)	01–02	Y	1	15620999
23.	2–D16	3.410	SEAL, A/CL HSG CVR	01–02	Y (GROMMET, ADAPTER, COVER)	1	25098174
24.	2–D15	3.405	INSULATOR, A/CL HSG (30.0MM O.D.) (3.417)	01–02	Y (LS1)	2	25176248
25.	2–D14	3.403	RETAINER, A/CL (POSN #1) (M6X1.0X24) (T30 TORX)	01–02	Y	2	12550385
26.	2–D14	3.403	NUT, A/CL (4.665)	01–02	Y (LS1, LS6)	2	10281487
27	2–D24	3.682	SEAL, MAP SEN	01–02	Y (LS1)	1	16194007

RPO DEFINITIONS
B4H – MODIFICATION – NOISE CONTROL, EXPORT
LS1 – ENGINE GAS, 8 CYL, 5.7L, SFI, ALUMINUM ENGINE

cardiagn.com

MM6 – TRANSMISSION MAN 6 SPD, BORG WARNER, 85MM, 1ST 2.66, 6TH 0.50, O/D

cardiagn.com

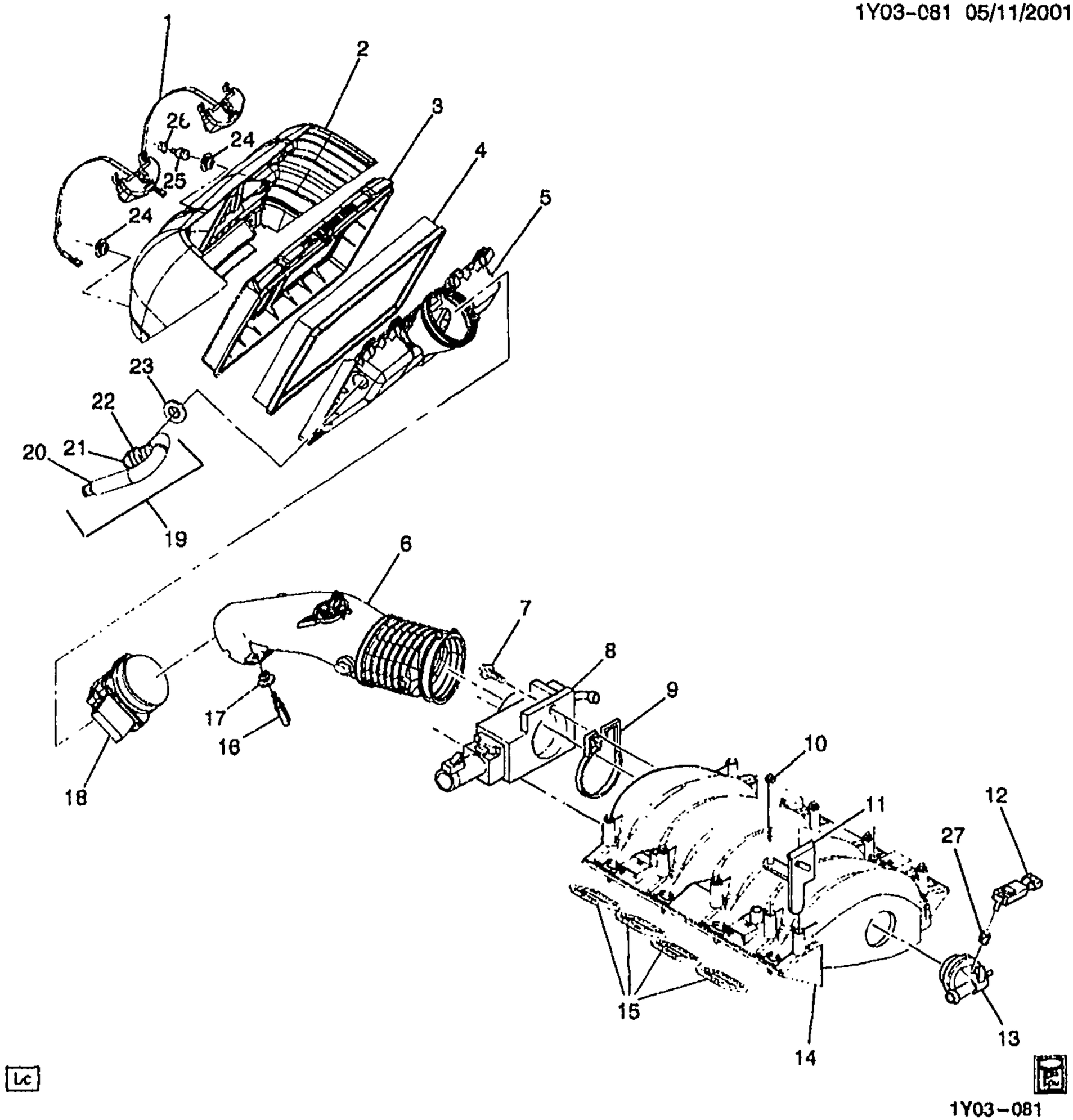

Lc

2001-2002 Y AIR INTAKE SYSTEM (EXC B4H)

1.	2-D15	3.407	CLAMP, A/CL	01-02	Y (LS1) (EXC B4H)	1	25314816
	2-D15	3.407	CLAMP, A/CL	01-02	Y (LS6)	1	25314816
2.	2-D16	3.417	DUCT, FRT INT AIR	01-02	Y (LS1)	1	25314814
	2-D16	3.417	DUCT, FRT INT AIR	01	Y (LS6)	1	25314814
	2-D16	3.417	DUCT, FRT INT AIR	02	Y (LS6)	1	12567571
3.	2-D15	3.406	HOUSING, A/CL	01-02	Y (LS1)	1	25314818
	2-D15	3.406	HOUSING, A/CL	01-02	Y (LS6)	1	25314818
4.	2-D16	3.410	ELEMENT, A/CL (PAPER) (AC-DELCO #A917C)	01-02	Y (LS1)	1	25042562

cardiagn.com

	2-D16	3.410	ELEMENT, A/CL (PAPER) (AC-DELCO #A917C)	01	Y (LS6)	1	25042562
5.	2-D16	3.410	COVER, A/CL HSG	01-02	Y (LS1)	1	25315957
	2-D16	3.410	COVER, A/CL HSG	01-02	Y (LS6)	1	25315957
6.	2-D15	3.407	DUCT, A/CL OTLT (W/RESO & INT AIR TEMP SEN)	01-02	Y (LS1)	1	25314823
	2-D15	3.407	DUCT, A/CL OTLT (W/RESO & INT AIR TEMP SEN)	01-02	Y (LS6)	1	25314823
	2-D15	3.407	DUCT, A/CL OTLT (INCLS 16)	01-02	Y (LS1)	1	25314820
	2-D15	3.407	DUCT, A/CL OTLT (INCLS 16)	01-02	Y (LS6)	1	25314820
7.		8.900	BOLT, METRIC HEX FLG HD (M6X1X30) (POR 9.8) (THROT BODY)	01-02		3	11514008
8.	2-D14	3.335	BODY, THROT (INCLS:THROTTLE BODY SENSOR POSITION) (SEE GROUP 3.000 "THROTTLE BODY" FOR DETAILED ILLUSTRATED VIEW.)	01-02	Y (LS1)	1	17113669
	2-D14	3.335	BODY, THROT (INCLS:THROTTLE BODY SENSOR POSITION) (SEE GROUP 3.000 "THROTTLE BODY" FOR DETAILED ILLUSTRATED VIEW.)	01-02	Y (LS6)	1	17113669
9.	2-D14	3.336	SEAL, THROT BODY	01-02	Y (LS1)	1	12552542
	2-D14	3.336	SEAL, THROT BODY	01-02	Y (LS6)	1	12552542
10.	2-D12	3.275	BOLT, INT MANIF (W/FLAT WASHER) (M6X1.0X21.8, 13.6 OD, GM500M, ZF, MACH, ADHES)	01-02	Y (LS1)	10	12552344
	2-D12	3.275	BOLT, INT MANIF (W/FLAT WASHER) (M6X1.0X21.8, 13.6 OD, GM500M, ZF, MACH, ADHES)	01-02	Y (LS6)	10	12552344
11.	2-D13	3.330	BRACKET, F/INJN FUEL RL (ON INTAKE MANIFOLD BEHIND FUEL RAIL-STOP)	01-02	Y (LS1)	LH	12556074
	2-D13	3.330	BRACKET, F/INJN FUEL RL (ON INTAKE MANIFOLD BEHIND FUEL RAIL-STOP)	01-02	Y (LS6)	LH	12556074
	2-D13	3.330	BRACKET, F/INJN FUEL RL (90 DEG "S" TYPE BRKT)	01-02	Y (LS1)	RH	12560384
	2-D13	3.330	BRACKET, F/INJN FUEL RL (90 DEG "S" TYPE BRKT)	01-02	Y (LS6)	RH	12560384
12.	2-D24	3.682	SENSOR, MAP (W/SEAL) (AC-DELCO #213-331)	01-02	Y (LS1)	1	16212460
	2-D24	3.682	SENSOR, MAP (W/SEAL) (AC-DELCO #213-331)	01	Y37 (LS6)	1	16212460
	2-D24	3.682	SENSOR, MAP (W/SEAL) (AC-DELCO #213-331)	02	Y (LS6)	1	16212460
	2-D24	3.682	CONNECTOR, SEN-MAP (GRAY) (3-WAY F)	01-02	Y (LS1)	1	12129946
	2-D24	3.682	CONNECTOR, SEN-MAP (GRAY) (3-WAY F)	01-02	Y (LS6)	1	12129946
13.		N.S.	PLUG, MAP SEN HOLE				
14.	2-D12	3.265	MANIFOLD, INT	01-02			88890524

cardiagn.com

							1Y03-081
15.	2-D12	3.270	GASKET KIT, INT MANIF (CONTAINS 8 GASKETS)	01-02	Y (LS1)	1	12533587
	2-D12	3.270	GASKET KIT, INT MANIF (CONTAINS 8 GASKETS)	01-02	Y (LS6)	8	12533587
16.	2-D14	3.403	RETAINER, A/CL (POSN #2) (M6X1.0X24) (T30 TORX)	01-02	Y (LS1)	2	12550385
	2-D14	3.403	RETAINER, A/CL (POSN #2) (M6X1.0X24) (T30 TORX)	01-02	Y (LS6)	2	12550385
	2-D14	3.403	RETAINER, A/CL (POSN #2)	01-02	Y (LS1)	2	25099299
	2-D14	3.403	RETAINER, A/CL (POSN #2)	01-02	Y (LS6)	2	25099299
	2-D14	3.403	RETAINER, A/CL (POSN #2)	01-02	Y (LS1)	1	25176485
	2-D14	3.403	RETAINER, A/CL (POSN #2)	01-02	Y (LS6)	1	25176485
17.	2-D15	3.405	INSULATOR, A/CL HSG (30.0MM O.D.) (3.417)	01-02	Y (LS1)	2	25176248
18.	2-D24	3.682	SENSOR, MASS AIRFLOW (AC-DELCO #213-364)	01-02	Y	1	25318411
	2-D24	3.682	SENSOR, MASS AIRFLOW (AC-DELCO #213-1150)	02	Y (LS6)	1	25341604
		N.S.	CONNECTOR, SEN-MASS AIRFLOW		.....		
19.	2-D21	3.675	HOSE, SECD AIR INJN PUMP A/CL (A/CL TO SECD A.I.R. PMP IN HOSE) (INCLS 17, 18, 19)	01-02	Y (LS1)	1	12557747
	2-D21	3.675	HOSE, SECD AIR INJN PUMP A/CL (A/CL TO SECD A.I.R. PMP IN HOSE) (INCLS 17, 18, 19)	01-02	Y (LS6)	1	12557747
20.	2-D23	3.680	CONNECTOR, SECD AIR INJN HOSE (STRAIGHT) (PART OF 16)	01-02	Y	1	12555054
21.	2-D23	3.680	CONNECTOR, SECD AIR INJN PUMP A/CL HOSE (90 DEGREE) (PART OF 16) (1.762)	01-02	Y	1	1263193
22.		8.948	CLAMP, SIZE 6, .30MIN. - .87MAX - HEX/SLOTTED (SECD AIR INJN PUMP A/CL HOSE) (PART OF 16)	01-02	Y	1	15620999
23.	2-D16	3.410	SEAL, A/CL HSG CVR	01-02	Y (GROMMET, ADAPTER, COVER)	1	25098174
24.	2-D15	3.405	INSULATOR, A/CL HSG (30.0MM O.D.) (3.417)	01-02	Y (LS1)	2	25176248
25.	2-D14	3.403	RETAINER, A/CL (POSN #1) (M6X1.0X24) (T30 TORX)	01-02	Y	2	12550385
26.	2-D14	3.403	NUT, A/CL (4.665)	01-02	Y (LS1, LS6)	2	10281487
27.	2-D24	3.682	SEAL, MAP SEN	01-02	Y (LS1)	1	16194007
	2-D24	3.682	SEAL, MAP SEN	01	Y37 (LS6)	1	16194007

RPO DEFINITIONS
B4H - MODIFICATION-NOISE CONTROL, EXPORT
LS1 - ENGINE GAS, 8 CYL, 5.7L, SFI, ALUMINUM ENGINE
LS6 - ENGINE GAS, 8 CYL, 5.7L, SFI, ALUMINUM, HIGH OUTPUT

cardiagn.com

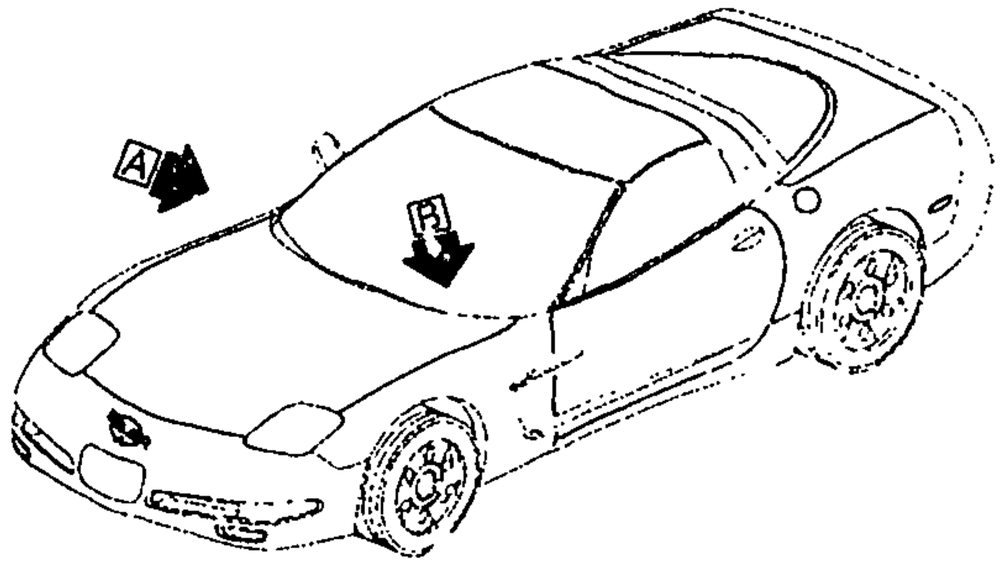

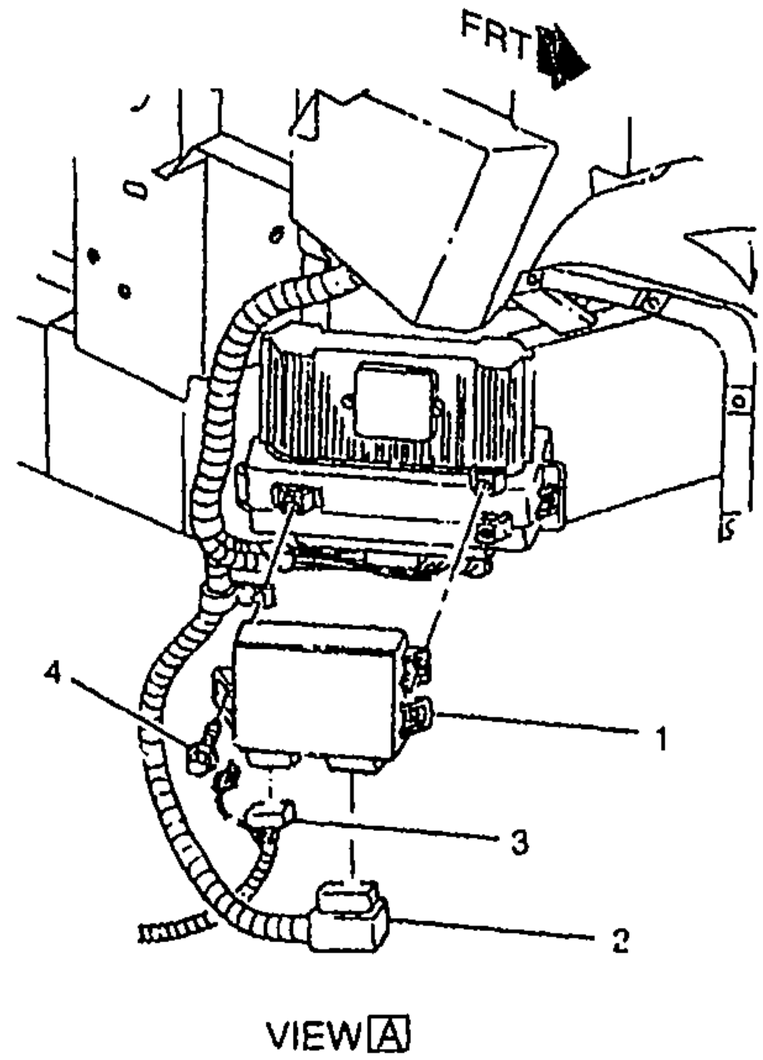

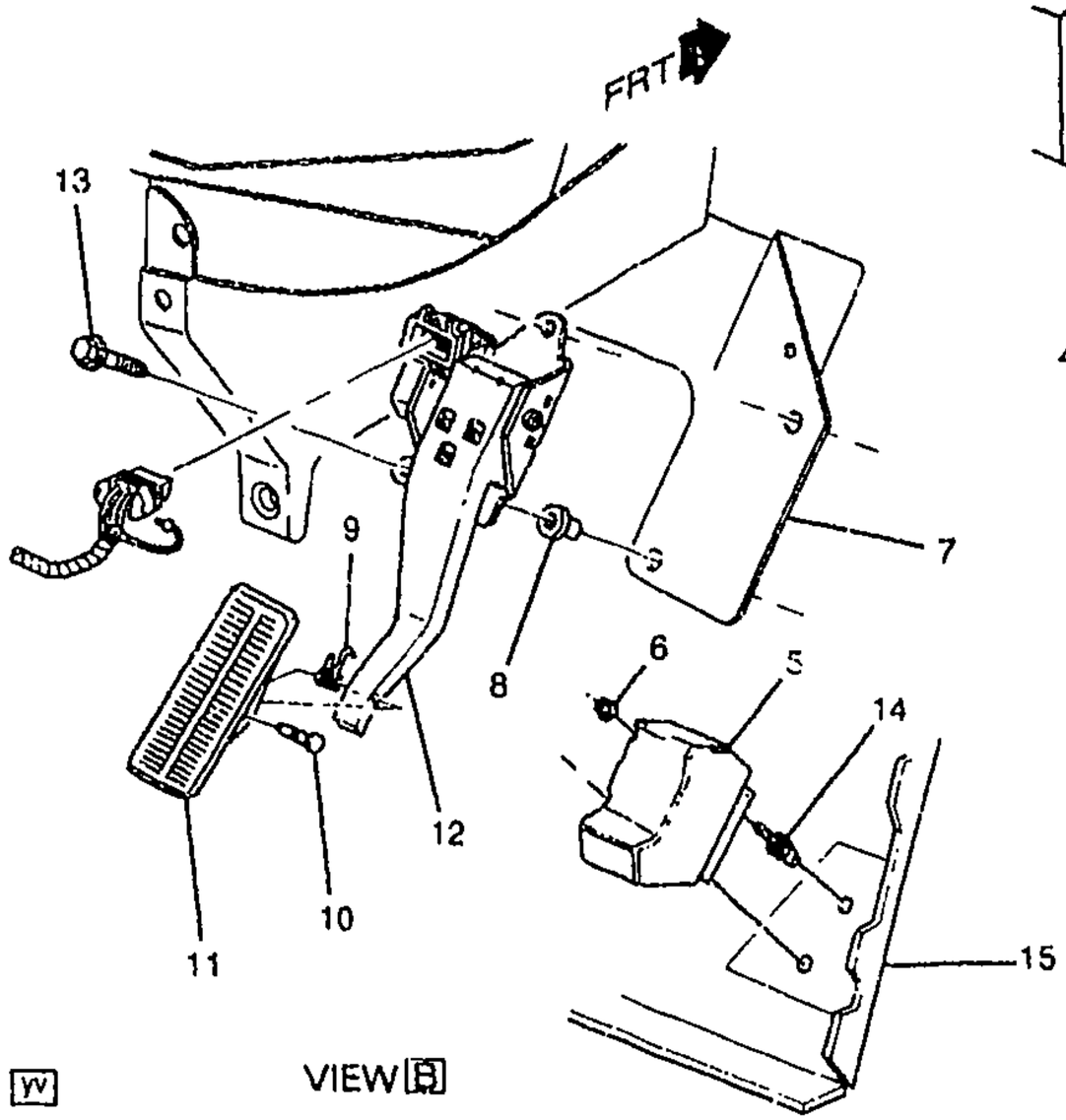

1Y03-062

1997-2002 Y ACCELERATOR CONTROL-V8

1.	2-D19	3.670	MODULE, ELEK THROT ACTR CONT	97-98	Y (LS1)	1	25311783
	2-D19	3.670	MODULE, ELEK THROT ACTR CONT	99-02	Y	1	25311783
2.		N.S.	CONNECTOR, TO ENG HARN				
3.	2-D16	3.454	CONNECTOR, MOT-THROT ACTR (BLACK) (2-WAY M) (W/LEADS) (13.090) (AC-DELCO #PT288)	97-00	Y (LS1)	1	12116247
	2-D16	3.454	CONNECTOR, MOT-THROT ACTR (TO I/P HARNESS) (BLACK) (10-WAY F) (W/LEADS) (2.530) (AC-DELCO #PT588)	97	Y07	1	12125676

© 2001 GENERAL MOTORS SERVICE PARTS OPERATIONS-CHEVROLET-15Y

cardiagn.com

							1Y03-062
4.		8.977	SCREW, HEX W/FL WA M4.2X2.25X20 TAP POR (TCM) (ATTACHES ETM TO PCM BRKT)	97-02		3	11508443
5.	2-D16	3.451	STOP, ACCEL PED	97-02	Y	1	12558786
6.		8.917	NUT, HFH M6X1X6.5 ZOR 9 (ACCEL PED STOP)	97-02		2	3530297
7.	2-N16	6.760	BRACKET, STRG COL (#52)	97-02	Y	1	10402879
8.	2-D16	3.454	NUT, ACCEL PED LVR SUPT (INSERT M8X1.25) (STEEL) (6.760)	97-02	Y	2	27000835
9.	2-D16	3.459	SPRING, ACCEL PED (PART OF 12)	97-02	Y	1	25162608
10.	2-D16	3.452	PIN, ACCEL PED PIV (PART OF 12)	97-02	Y	1	25162606
11.	2-D16	3.451	PEDAL, ACCEL (PART OF 12) (PEDAL ONLY)	97-02	Y	1	3920296
12.	2-D16	3.451	PEDAL, ACCEL (W/BRKT & POSN SEN) (INCLS 9, 10, 11)	97-02	Y	1	12565643
13.		8.900	BOLT, M8X1.25X25, 21.8 THD LEN, 180 OD, 10.9, POR (ACCEL PED LVR SUPT)	97-02		2	11515757
14.		N.S.	STUD, ACCEL PED STOP BRKT			2	
15.	2-N24	12.975	REINFORCEMENT, FLR K/UP PNL	97-02	Y	LH	10299652
	2-N24	12.975	REINFORCEMENT, FLR K/UP PNL	97-02	Y	RH	10299653

RPO DEFINITIONS
LS1 - ENGINE GAS, 8 CYL, 5.7L, SFI, ALUMINUM ENGINE

cardiagn.com

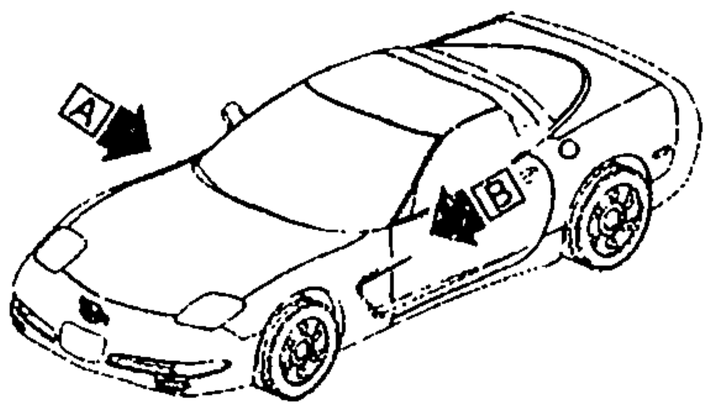

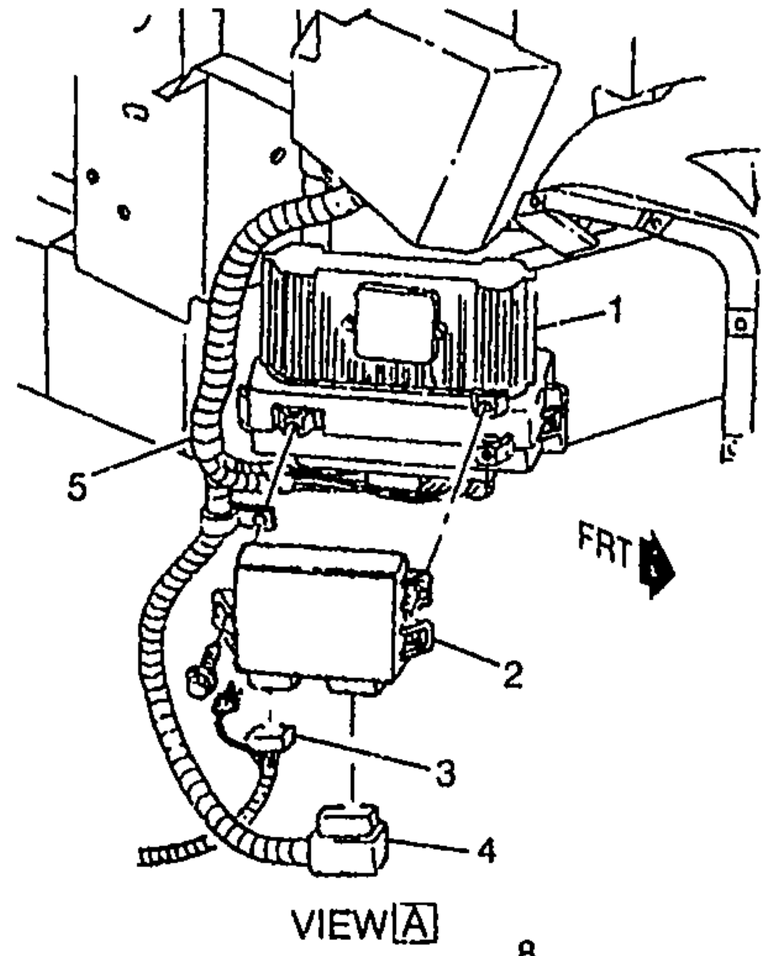

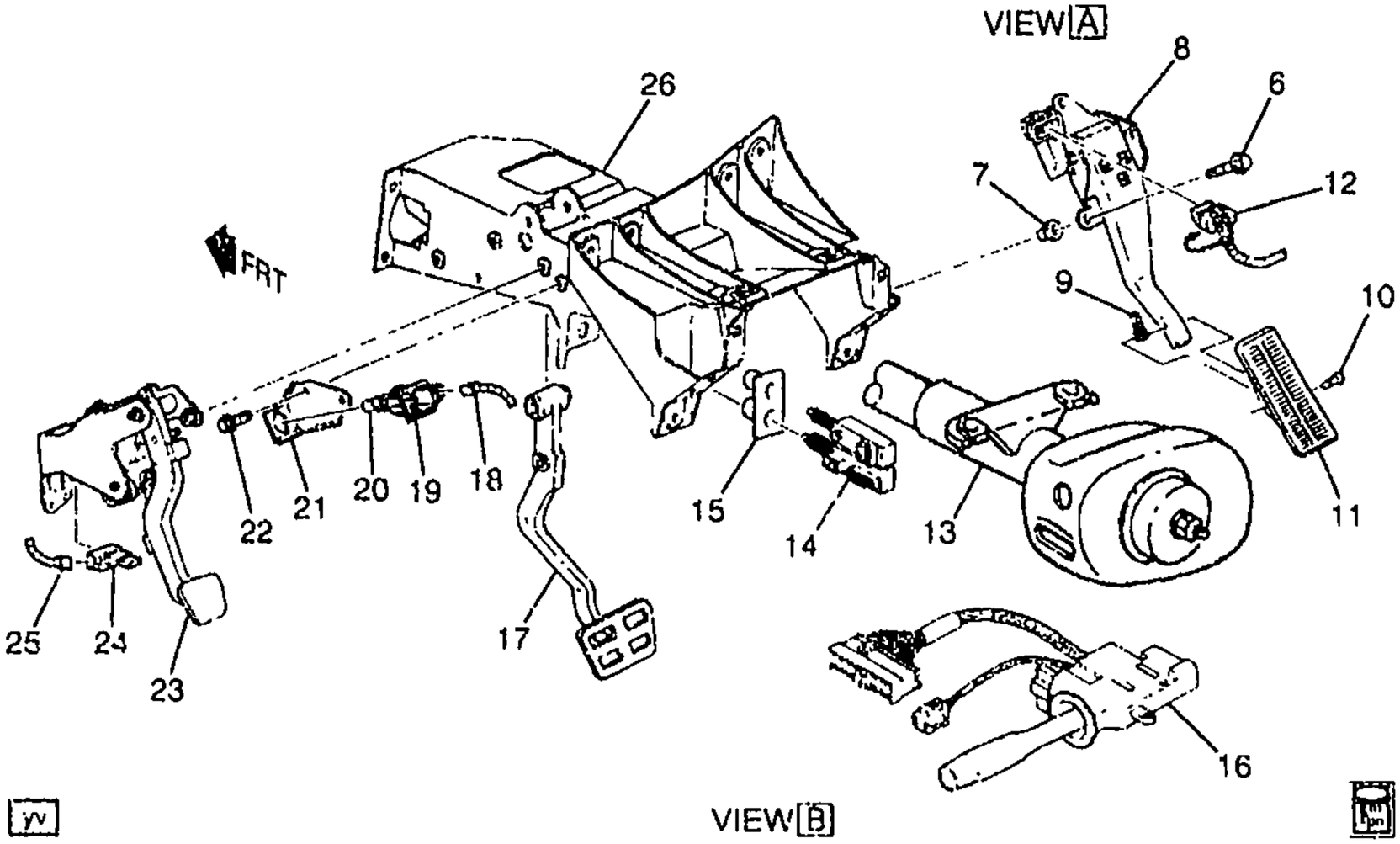

1Y03-066

1997-2002 Y CRUISE CONTROL

1.	2-D19	3.670	MODULE, PWRT CONT (REMAN) (AC-DELCO #16232148)	97	Y	1	16232148
	2-D19	3.670	MODULE, PWRT CONT (REMAN) (AC-DELCO #16238212)	98	Y	1	16238212
	2-D19	3.670	MODULE, PWRT CONT (REMAN) (REQUIRES PROGRAMMING PRIOR TO PROPER OPERATION IN VEHICLE)	99-00	Y (LS1)	1	9354896

cardiagn.com

	2-D19	3.670	MODULE, PWRT CONT (REMAN) (AC-DELCO #12200411)	01-02	Y	1	12200411
	2-D19	3.670	MODULE, PWRT CONT (REMAN) (AC-DELCO #12200411) (ID DJMA)	01-02	Y (LS1, GU2, NC1, NF7, YGH)	1	12200411
	2-D19	3.670	MODULE, PWRT CONT (REMAN) (AC-DELCO #12200411) (ID DHYK)	01-02	Y (LS1, G90, K29, NF7)	1	12200411
	2-D19	3.670	MODULE, PWRT CONT (REMAN) (AC-DELCO #12200411) (ID DHYJ)	01-02	Y (LS1, G90, NA3)	1	12200411
	2-D19	3.670	MODULE, PWRT CONT (REMAN) (AC-DELCO #12200411) (ID DJMC)	01-02	Y (LS1, G90, NC1, NF7) (EXC K29)	1	12200411
	2-D19	3.670	MODULE, PWRT CONT (REMAN) (AC-DELCO #12200411) (ID DHYL)	01-02	Y (LS1, G90, NM2)	1	12200411
	2-D19	3.670	MODULE, PWRT CONT (REMAN) (AC-DELCO #12200411) (ID DJMB)	01-02	Y (LS1, G90, NT3)	1	12200411
	2-D19	3.670	MODULE, PWRT CONT (REMAN) (AC-DELCO #12200411) (ID DHYR)	01-02	Y (LS1, MM6, K29, NF7)	1	12200411
	2-D19	3.670	MODULE, PWRT CONT (REMAN) (AC-DELCO #12200411) (ID DHYM)	01-02	Y (LS1, MM6, NA3)	1	12200411
	2-D19	3.670	MODULE, PWRT CONT (REMAN) (AC-DELCO #12200411) (ID DHYN)	01-02	Y (LS1, MM6, NF7, NC1) (EXC K29)	1	12200411
	2-D19	3.670	MODULE, PWRT CONT (REMAN) (AC-DELCO #12200411) (ID DHYP)	01-02	Y (LS1, MM6, NT3)	1	12200411
	2-D19	3.670	MODULE, PWRT CONT (REMAN) (AC-DELCO #12200411) (ID DHYT)	01-02	Y (LS6, M12, K29, NF7)	1	12200411
	2-D19	3.670	MODULE, PWRT CONT (REMAN) (AC-DELCO #12200411) (ID DHYS)	01-02	Y (LS6, M12, NC1, NF7) (EXC K29)	1	12200411
	2-D19	3.670	MODULE, PWRT CONT (REMAN) (REQUIRES PROGRAMMING) (AC-DELCO #12209614)	01-02	Y (LA1, MN5, FR9)	1	12209614
	2-D19	3.670	CONNECTOR, MDL-PWRT CONT (80-WAY F) (USE TERM 12084912 18 GA & TERM 12084913 20 GA)	97-99	Y	2	12167308
	2-D19	3.670	CONNECTOR, MDL-PWRT CONT (80-WAY F) (USE TERM 12084912 18 GA & TERM 12084913 20 GA)	01-02	Y	2	12167308
2.	2-D19	3.670	MODULE, ELEK THROT ACTR CONT	97-98	Y (LS1)	1	25311783
	2-D19	3.670	MODULE, ELEK THROT ACTR CONT	99-02	Y	1	25311783
3.	2-D16	3.454	CONNECTOR, MOT-THROT ACTR (TO I/P HARN) (BLACK) (2-WAY M) (W/LEADS) (13.090) (AC-DELCO #PT288)	97-00	Y (LS1)	1	12116247

cardiagn.com

	2-D16	3.454	CONNECTOR, MOT-THROT ACTR (TO I/P HARNESS) (TO I/P HARN) (BLACK) (10-WAY F) (W/LEADS) (2.530) (AC-DELCO #PT588)	97	Y07	1	12125676
	2-D19	3.670	CONNECTOR, MDL-THROT ACTR CONT (TO I/P HARN) (BLACK) (2-WAY M) (W/LEADS) (13.090) (AC-DELCO #PT288)	98	Y (JAG)	1	12116247
	2-D19	3.670	CONNECTOR, MDL-THROT ACTR CONT (TO ENG HARNESS) (TO I/P HARN) (16-WAY F, W/O LEADS, M/P 100W)	97-02	Y	1	12191065
	2-D19	3.670	CONNECTOR, MDL-THROT ACTR CONT (TO I/P HARNESS) (TO I/P HARN) (BLACK) (10-WAY F) (W/LEADS) (2.530) (AC-DELCO #PT588)	98-02	Y	2	12125676
4.	2-D19	3.670	CONNECTOR, MDL-THROT ACTR CONT (W/JAG) (TO ENG WRG HARN) (BLACK) (2-WAY M) (W/LEADS) (13.090) (AC-DELCO #PT288)	98	Y	1	12116247
	2-D19	3.670	CONNECTOR, MDL-THROT ACTR CONT (TO ENG WRG HARN) (16-WAY F, W/O LEADS, M/P 100W)	97-02	Y	1	12191065
5.	2-B14	2.525	HARNESS, ENG WRG	97	Y (M30)	1	12163328
	2-B14	2.525	HARNESS, ENG WRG	97	Y (MM6)	1	12163330
	2-B14	2.525	HARNESS, ENG WRG	98	Y (M30) (EXC JAG)	1	12163328
	2-B14	2.525	HARNESS, ENG WRG	98	Y (MM6) (EXC JAG, VD1)	1	12163330
	2-B14	2.525	HARNESS, ENG WRG	98	Y (M30, JAG)	1	12163794
	2-B14	2.525	HARNESS, ENG WRG	98	Y (MM6, JAG) (EXC VD1)	1	12163795
	2-B14	2.525	HARNESS, ENG WRG	99-00	Y (MM6) (EXC VD1)	1	12189523
	2-B14	2.525	HARNESS, ENG WRG	99-00	Y (M30)	1	12189524
	2-B14	2.525	HARNESS, ENG WRG	01-02	Y (M30)	1	15329389
	2-B14	2.525	HARNESS, ENG WRG	01-02	Y (MM6)	1	15329391
	2-B14	2.525	HARNESS, ENG WRG	01-02	Y37 (LS6, M12)	1	15329391
	2-B14	2.525	HARNESS, ENG WRG	02	YY37	1	15329391
	2-B14	2.525	HARNESS, ENG WRG	98	Y (MM6, JAG, VD1) (EXPORT)	1	12189910
	2-B14	2.525	HARNESS, ENG WRG (ENHANCE EVAP EMISS)	99-00	Y (MM6, VD1) (EXPORT)	1	12189911
6.		8.900	BOLT, M8X1.25X25, 21.8 THD LEN, 180 OD, 10.9, POR (ACCEL PED LVR SUPT)	97-02		2	11515757
7.	2-D16	3.454	NUT, ACCEL PED LVR SUPT (INSERT M8X1.25) (STEEL) (6.700)	97-02	Y	2	27000835
8.	2-D16	3.451	PEDAL, ACCEL (W/BRKT & POSN SEN) (INCLS 9, 10, 11)	97-02	Y	1	12565643
9.	2-D16	3.459	SPRING, ACCEL PED (PART OF 8)	97-02	Y	1	25162608
10.	2-D16	3.452	PIN, ACCEL PED PIV (PART OF 8)	97-02	Y	1	25162606

cardiagn.com

11.	2-D16	3.451	PEDAL, ACCEL (PART OF 8) (PEDAL ONLY)	97-02	Y	1	3920296
12.	2-A18	2.480	HARNESS, I/P WRG (SEE GROUP 10 FOR DETAILED ILLUSTRATED VIEW)				
13.	2-N16	6.518	COLUMN, STRG	97-98	Y	1	26047460
	2-N16	6.518	COLUMN, STRG	98	Y07-67 (NP7)	1	26071322
	2-N16	6.518	COLUMN, STRG	99-00	Y07-67 (EXC NP7, N37)	1	26070622
	2-N16	6.518	COLUMN, STRG	99-00	Y07-67 (NP7)	1	26070623
	2-N16	6.518	COLUMN, STRG	99-00	Y (N37)	1	26070626
	2-N16	6.518	COLUMN, STRG	99	Y37 (NV7)	1	26070622
	2-N16	6.518	COLUMN, STRG	00	Y37	1	26070622
	2-N16	6.518	COLUMN, STRG	01	Y07-67 (MM6) (EXC NP7, N37)	1	26079636
	2-N16	6.518	COLUMN, STRG	01	Y07-67 (MM6, N37)	1	26079640
	2-N16	6.518	COLUMN, STRG	01	Y07-67 (M30, N37)	1	26080425
	2-N16	6.518	COLUMN, STRG	01	Y07-67 (M30) (EXC NP7, N37)	1	26080430
	2-N16	6.518	COLUMN, STRG	01	Y37 (M12)	1	26079636
	2-N16	6.518	COLUMN, STRG	02	Y07-67 (MM6, N37)	1	26094231
	2-N16	6.518	COLUMN, STRG	02	Y07-67 (M30, N37)	1	26094232
	2-N16	6.518	COLUMN, STRG	02	Y07-67 (MM6) (EXC NP7, N37)	1	26094233
	2-N16	6.518	COLUMN, STRG	02	Y07-67 (M30) (EXC NP7, N37)	1	26094235
	2-N16	6.518	COLUMN, STRG	02	Y37 (M12)	1	26094233
	2-B15	2.530	CONNECTOR, INLINE-TO STRG COL HARN (BLACK) (4-WAY M) (W/LEADS) (2.535) (AC-DELCO #PT144)	97-02	Y	1	12085536
	2-B15	2.530	CONNECTOR, INLINE-TO STRG COL HARN (23-WAY M) (W/O LEADS)	97-02	Y	1	12092248
	2-B15	2.530	CONNECTOR, INLINE-TO STRG COL HARN (6-WAY F, W/LEADS) (9.172) (AC-DELCO #PT590)	97-02	Y	1	12125678
	2-B15	2.530	CONNECTOR, INLINE-TO STRG COL HARN (BLACK) (4-WAY M) (2.535)	98-02	Y	1	12085206
	2-B15	2.530	CONNECTOR, INLINE-TO STRG COL HARN (BLACK) (3-WAY F W/LEADS) (2.535) (AC-DELCO #PT256)	99-02	Y07-67	1	12101864
	2-B15	2.530	CONNECTOR, INLINE-TO STRG COL HARN (3-WAY M) (9.709) (AC-DELCO #PT455)	99-02	Y07-67	1	12117322
	2-B15	2.530	CONNECTOR, INLINE-TO STRG COL HARN (BLACK) (4-WAY M) (W/LEADS) (2.535) (AC-DELCO #PT144)	02	YY67 (M30, CJ2, N37) (EXC T89)	1	12085536
	2-B15	2.530	CONNECTOR, INLINE-TO STRG COL HARN (23-WAY M) (W/O LEADS)	02	YY67 (M30, CJ2, N37) (EXC T89)	1	12092248

cardiagn.com

							1Y03-066
	2-B15	2.530	CONNECTOR, INLINE-TO STRG COL HARN (BLACK) (3-WAY F W/LEADS) (2.535) (AC-DELCO #PT256)	02	YY67 (M30, CJ2, N37) (EXC T89)	1	12101864
	2-B15	2.530	CONNECTOR, INLINE-TO STRG COL HARN (3-WAY M) (9.709) (AC-DELCO #PT455) ...	02	YY67 (M30, CJ2, N37) (EXC T89)	1	12117322
	2-B15	2.530	CONNECTOR, INLINE-TO STRG COL HARN (6-WAY F, W/LEADS) (9.172) (AC-DELCO #PT590)	02	YY67	1	12125678
	2-B15	2.530	CONNECTOR, INLINE-TO STRG COL HARN (RR) (BLACK) (6-WAY M W/LEADS) (13.100) (AC-DELCO #PT1013)	98-02	Y	1	15305872
	2-B15	2.530	CONNECTOR, INLINE-TO STRG COL HARN (RR) (BLACK) (6-WAY M W/LEADS) (13.100) (AC-DELCO #PT1013)	02	YY67 (M30, CJ2, N37) (EXC T89)	1	15305872
	2-B15	2.530	CONNECTOR, INLINE-TO STRG COL HARN (TO TELESCOPING MOTOR) (2-WAY F W/LEADS W/INDEX TAB OTR EDGE OF CAVITY B) (2.535) (AC-DELCO #PT146)	99-02	Y	1	12085535
	2-B15	2.530	CONNECTOR, INLINE-TO STRG COL HARN (TO TELESCOPING MOTOR) (2-WAY F W/LEADS W/INDEX TAB OTR EDGE OF CAVITY B) (2.535) (AC-DELCO #PT146)	02	YY67 (M30, CJ2, N37) (EXC T89)	1	12085535
	2-N16	6.518	COLUMN, STRG	01	Y (NP7) (EXPORT)	1	26079637
	2-N16	6.518	COLUMN, STRG	02	Y (NP7) (EXPORT)	1	26094234
14.	2-N14	4.710	SWITCH, ELEK BRK CONT BRK PED (W/ S/LP SW) (INCLS 15) ...	97-02	Y	1	11516210
	2-A17	2.447	SWITCH, ELEK BRK CONT BRK PED (W/ S/LP SW) (INCLS 15) (4.710)	97-02	Y	1	11516210
	2-N21	9.765	CONNECTOR, LP-BRK IND (BLACK) (2-WAY F W/LEADS) (3.670) (AC-DELCO #PT374) ...	97-02	Y	1	12102747
	2-A17	2.447	CONNECTOR, SW-S/LP & TCC (4-WAY F) (W/LEADS) (9.764) (AC-DELCO #PT483)	97-02	Y	1	12117350
	2-A17	2.447	CONNECTOR, SW-S/LP & TCC (4-WAY F) (W/LEADS) (9.764) (AC-DELCO #PT483)	02	YY67 (M30, CJ2, N37) (EXC T89)	1	12117350
	2-N15	4.720	RETAINER, ELEK BRK CONT WRG HARN MDL CONN (32-WAY FEMALE MIC/P 100W RETAINER, CLEAR)	99	Y37 (EXC JL4, NV7, T96)	1	12129232
15.	2-A17	2.447	RETAINER, S/LP & TCC & CRCONT REL SW (PART OF 14) (AC-DELCO #3537079)	97-02	Y	1	3537079
16	2-D27	3.883	SWITCH, HDLP & T/SIG & CRCONT (W/ LVR) (2.485) (AC-DELCO #D1512G)	97-02	Y	1	26075870

cardiagn.com

							1Y03-066
	2-B12	2.485	SWITCH, HDLP & T/SIG & CRCONT (W/ LVR) (AC-DELCO #D1512G)	97-02	Y	1	26075870
17.	2-N14	4.625	PEDAL, BRK	97-02	Y (M30)	1	10253660
	2-N14	4.625	PEDAL, BRK	97-00	Y (MM6)	1	10262012
	2-N14	4.625	PEDAL, BRK	01-02	Y (MM6, M12)	1	10262012
18.	2-D28	3.887	CONNECTOR, SW-CRCONT REL (BLACK) (2-WAY F) (W/LEADS) (2.530) (AC-DELCO #PT733)	97-02	Y	1	12123463
19.	2-D28	3.887	SWITCH, CRCONT REL (W/O RET)	97-98	Y (MM6)	1	22584374
	2-D28	3.887	SWITCH, CRCONT REL	99-00	Y (MM6)	1	10426455
	2-D28	3.887	SWITCH, CRCONT REL	01-02	Y07-67 (MM6)	1	10426455
	2-D28	3.887	SWITCH, CRCONT REL	01-02	Y37	1	10426455
20.	2-D28	3.885	RETAINER, CRCONT VAC REL VLV	97-00	Y (MM6)	1	10194431
	2-D28	3.885	RETAINER, CRCONT VAC REL VLV	01-02	Y07-67 (LS1, MM6)	1	10194431
	2-D28	3.885	RETAINER, CRCONT VAC REL VLV	01-02	Y37 (LS6, M12)	1	10194431
21.	2-D28	3.887	BRACKET, CRCONT REL SW	97-00	Y (MM6)	1	12555049
	2-D28	3.887	BRACKET, CRCONT REL SW	01-02	Y (MM6, M12)	1	12555049
22.		8.900	BOLT, W/WA (M6X1X25) (CR CONT REL SW BRKT) (CR CONT CLU DISABLE SW TO STRG CLU SUPT BRKT)	97-02		2	11514139
23.	2-N12	0.830	PEDAL, CLU	97-00	Y (MM6)	1	12552447
	2-N12	0.830	PEDAL, CLU	01-02	Y (MM6, M12)	1	12552447
24.	2-E11	4.054	SWITCH, CLU PED POSN (AC-DELCO #D2214A)	97-00	Y (MM6)	1	14094368
	2-E11	4.054	SWITCH, CLU PED POSN (AC-DELCO #D2214A)	01-02	Y (MM6, M12)	1	14094368
25.	2-E11	4.054	CONNECTOR, SW-CLU PED POSN (BLUE) (2-WAY F) (W/LEADS) (AC-DELCO #PT357)	97-02	Y	1	12102690
26.	2-N16	6.760	BRACKET, STRG COL (#52)	97-02	Y	1	10402879

RPO DEFINITIONS
CJ2 – HVAC SYSTEM AIR CONDITIONER FRT, AUTO TEMP CONT AUX TEMP CONT
FR9 – RATIO TRANSAXLE FINAL DRIVE 3.29
GU2 – AXLE,REAR,2.73 RATIO
G90 – AXLE REAR 3.15 RATIO
JAG – BRAKE PROVISIONS ABS LOCATION
JL4 – CONTROL ACTIVE BRAKE
K29 - MODULE,POWERTRAIN CONTROL
LA1 – ENGINE GAS, 6 CYL, 3.4L, MFI, HO
LS1 – ENGINE GAS, 8 CYL, 5.7L, SFI, ALUMINUM ENGINE
LS6 – ENGINE GAS, 8 CYL, 5.7L, SFI, ALUMINUM, HIGH OUTPUT
MM6 – TRANSMISSION MAN 6 SPD, BORG WARNER, 85MM, 1ST 2.66, 6TH 0.50, O/D
MN5 – TRANSMISSION AUTO 4 SPD, 4T45-E
M12 – TRANSMISSION MAN 6 SPD, TREMEC, 85MM, 1ST 2.97, 6TH 0.57, O/D
M30 – TRANSMISSION,AUTOMATIC 4 SPEED,4L60E,ELECTRONIC
NA3 – EMISSION SYSTEM JAPAN
NC1 – EMISSION SYSTEM CALIFORNIA, LEV
NF7 – EMISSION SYSTEM FEDERAL, NLEV
NM2 – EMISSION SYSTEM EXPORT, LEADED FUEL
NP7 – STEERING COLUMN(EXPORT)

cardiagn.com

NT3 – EMISSION SYSTEM EEC 00
NV7 – STEERING,POWER,VARIABLE EFFORT
N37 – STEERING COLUMN,TILT AND TELESCOPING
T89 – LAMP,TAIL AND STOP (EXPORT)
T96 – LAMP,FRONT FOG
VD1 – PROVISION OPTIONS,EUROPE(EXPORT)
YGH – TIRE REAR P275/40ZR18 BW TL HW4 SBR i.MT

cardiagn.com

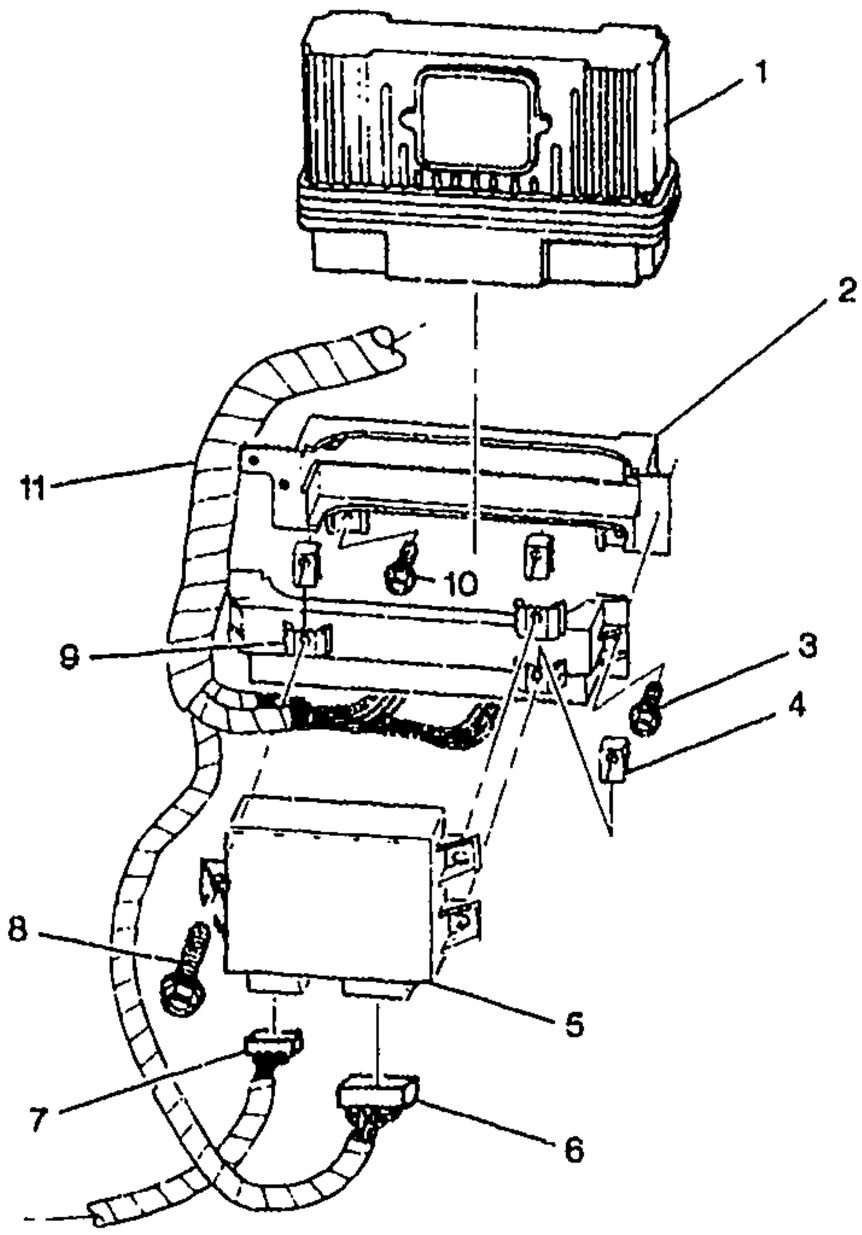

1Y03-065

1997-2002 Y P.C.M. MODULE & WIRING HARNESS

1.	2-L19	3.670	MODULE, PWRT CONT (REMAN) (AC-DELCO #16232148)	97	Y	1	16232148
	2-D19	3.670	MODULE, PWRT CONT (REMAN) (AC-DELCO #16238212)	98	Y	1	16238212
	2-D19	3.670	MODULE, PWRT CONT (REMAN) (REQUIRES PROGRAMMING PRIOR TO PROPER OPERATION IN VEHICLE)	99-00	Y (LS1)	1	9354896
	2-D19	3.670	MODULE, PWRT CONT (REMAN) (AC-DELCO #12200411)	01-02	Y	1	12200411
	2-D19	3.670	MODULE, PWRT CONT (REMAN) (AC-DELCO #12200411) (ID DJMA)	01-02	Y (LS1, GU2, NC1, NF7, YGH)	1	12200411
	2-D19	3.670	MODULE, PWRT CONT (REMAN) (AC-DELCO #12200411) (ID DHYK)	01-02	Y (LS1, G90, K29, NF7)	1	12200411
	2-D19	3.670	MODULE, PWRT CONT (REMAN) (AC-DELCO #12200411) (ID DHYJ)	01-02	Y (LS1, G90, NA3)	1	12200411
	2-D19	3.670	MODULE, PWRT CONT (REMAN) (AC-DELCO #12200411) (ID DJMC)	01-02	Y (LS1, G90, NC1, NF7) (EXC K29)	1	12200411

cardiagn.com

							1Y03-065
	2-D19	3.670	MODULE, PWRT CONT (REMAN) (AC-DELCO #12200411) (ID DHYL)	01-02	Y (LS1, G90, NM2)	1	12200411
	2-D19	3.670	MODULE, PWRT CONT (REMAN) (AC-DELCO #12200411) (ID DJMB)	01-02	Y (LS1, G90, NT3)	1	12200411
	2-D19	3.670	MODULE, PWRT CONT (REMAN) (AC-DELCO #12200411) (ID DHYR)	01-02	Y (LS1, MM6, K29, NF7)	1	12200411
	2-D19	3.670	MODULE, PWRT CONT (REMAN) (AC-DELCO #12200411) (ID DHYM)	01-02	Y (LS1, MM6, NA3)	1	12200411
	2-D19	3.670	MODULE, PWRT CONT (REMAN) (AC-DELCO #12200411) (ID DHYN)	01-02	Y (LS1, MM6, NF7, NC1) (EXC K29)	1	12200411
	2-D19	3.670	MODULE, PWRT CONT (REMAN) (AC-DELCO #12200411) (ID DHYP)	01-02	Y (LS1, MM6, NT3)	1	12200411
	2-D19	3.670	MODULE, PWRT CONT (REMAN) (AC-DELCO #12200411) (ID DHYT)	01-02	Y (LS6, M12, K29, NF7)	1	12200411
	2-D19	3.670	MODULE, PWRT CONT (REMAN) (AC-DELCO #12200411) (ID DHYS)	01-02	Y (LS6, M12, NC1, NF7) (EXC K29)	1	12200411
	2-D19	3.670	MODULE, PWRT CONT (REMAN) (REQUIRES PROGRAMMING) (AC-DELCO #12209614)	01-02	Y (LA1, MN5, FR9)	1	12209614
	2-D19	3.670	CONNECTOR, MDL-PWRT CONT (80-WAY F) (USE TERM 12084912 18 GA & TERM 12084913 20 GA)	97-99	Y	2	12167308
	2-D19	3.670	CONNECTOR, MDL-PWRT CONT (80-WAY F) (USE TERM 12084912 18 GA & TERM 12084913 20 GA)	01-02	Y	2	12167308
2.	2-D21	3.671	BRACKET, PCM (INR)	97-98	Y	1	10286699
	2-D21	3.671	BRACKET, PCM (INR)	99-02	Y	1	10288066
3.		8.977	SCREW, HEX W/FL WA M4.2X2.25X20 TAP POR (POSN #1)	97-02		2	11508443
4.		8.921	NUT, U TYPE, MULTI THD, PREV TORQ, M4.2X1.41TAP, 8.1REACH, 0.65-3.80 PNLS 1065 PZOR (TCM) (AC-DELCO #11513599)	97-02		3	11513599
5.	2-D19	3.670	MODULE, ELEK THROT ACTR CONT	97-98	Y (LS1)	1	25311783
	2-D19	3.670	MODULE, ELEK THROT ACTR CONT	99-02	Y	1	25311783
6.	2-D19	3.670	CONNECTOR, MDL-THROT ACTR CONT (TO ENG HARNESS) (16-WAY F, W/O LEADS, M/P 100W)	97-02	Y	1	12191065
7.	2-D19	3.670	CONNECTOR, MDL-THROT ACTR CONT (TO I/P HARNESS) (BLACK) (10-WAY F) (W/LEADS) (2.530) (AC-DELCO #PT586)	97-02	Y	2	12125676
8.		8.977	SCREW, HEX W/FL WA M4.2X2.25X20 TAP POR (TCM)	97-02		3	11508443

cardiagn.com

							1Y03-065
9.	2-D21	3.671	BRACKET, PCM (OTR)	97-98	Y	1	10286700
	2-D21	3.671	BRACKET, PCM (OTR)	99-02	Y	1	10288067
10.		8.977	SCREW, HIGH-HEX WA HD TAP/B 4.200X 1.41X 30.00 PO (POSN #2) (8.900)	97-02		4	11509541
11.	2-B14	2.525	HARNESS, ENG WRG	97	Y (M30)	1	12163328
	2-B14	2.525	HARNESS, ENG WRG	97	Y (MM6)	1	12163330
	2-B14	2.525	HARNESS, ENG WRG	98	Y (M30) (EXC JAG)	1	12163328
	2-B14	2.525	HARNESS, ENG WRG	98	Y (MM6) (EXC JAG, VD1)	1	12163330
	2-B14	2.525	HARNESS, ENG WRG	98	Y (M30, JAG)	1	12163794
	2-B14	2.525	HARNESS, ENG WRG	98	Y (MM6, JAG) (EXC VD1)	1	12163795
	2-B14	2.525	HARNESS, ENG WRG	99-00	Y (MM6) (EXC VD1)	1	12189523
	2-B14	2.525	HARNESS, ENG WRG	99-00	Y (M30)	1	12189524
	2-B14	2.525	HARNESS, ENG WRG	01-02	Y (M30)	1	15329389
	2-B14	2.525	HARNESS, ENG WRG	01-02	Y (MM6)	1	15329391
	2-B14	2.525	HARNESS, ENG WRG	01-02	Y37 (LS6, M12)	1	15329391
	2-B14	2.525	HARNESS, ENG WRG	02	YY37	1	15329391
	2-B14	2.525	HARNESS, ENG WRG	98	Y (MM6, JAG, VD1) (EXPORT)	1	12189910
	2-B14	2.525	HARNESS, ENG WRG (ENHANCE EVAP EMISS)	99-00	Y (MM6, VD1) (EXPORT)	1	12189911

RPO DEFINITIONS
FR9 – RATIO TRANSAXLE FINAL DRIVE 3.29
GU2 – AXLE,REAR,2.73 RATIO
G90 – AXLE REAR 3.15 RATIO
JAG – BRAKE PROVISIONS ABS LOCATION
K29 – MODULE,POWERTRAIN CONTROL
LA1 – ENGINE GAS, 6 CYL, 3.4L, MFI, HO
LS1 – ENGINE GAS, 8 CYL, 5.7L, SFI, ALUMINUM ENGINE
LS6 – ENGINE GAS, 8 CYL, 5.7L, SFI, ALUMINUM, HIGH OUTPUT
MM6 – TRANSMISSION MAN 6 SPD, BORG WARNER, 85MM, 1ST 2.66, 6TH 0.50, O/D
MN5 – TRANSMISSION AUTO 4 SPD, 4T45-E
M12 – TRANSMISSION MAN 6 SPD, TREMEC, 85MM, 1ST 2.97, 6TH 0.57, O/D
M30 – TRANSMISSION,AUTOMATIC 4 SPEED,4L60E,ELECTRONIC
NA3 – EMISSION SYSTEM JAPAN
NC1 – EMISSION SYSTEM CALIFORNIA, LEV
NF7 – EMISSION SYSTEM FEDERAL, NLEV
NM2 – EMISSION SYSTEM EXPORT, LEADED FUEL
NT3 – EMISSION SYSTEM EEC 00
VD1 – PROVISION OPTIONS,EUROPE(EXPORT)
YGH – TIRE REAR P275/40ZR18 BW TL HW4 SBR EMT

cardiagn.com

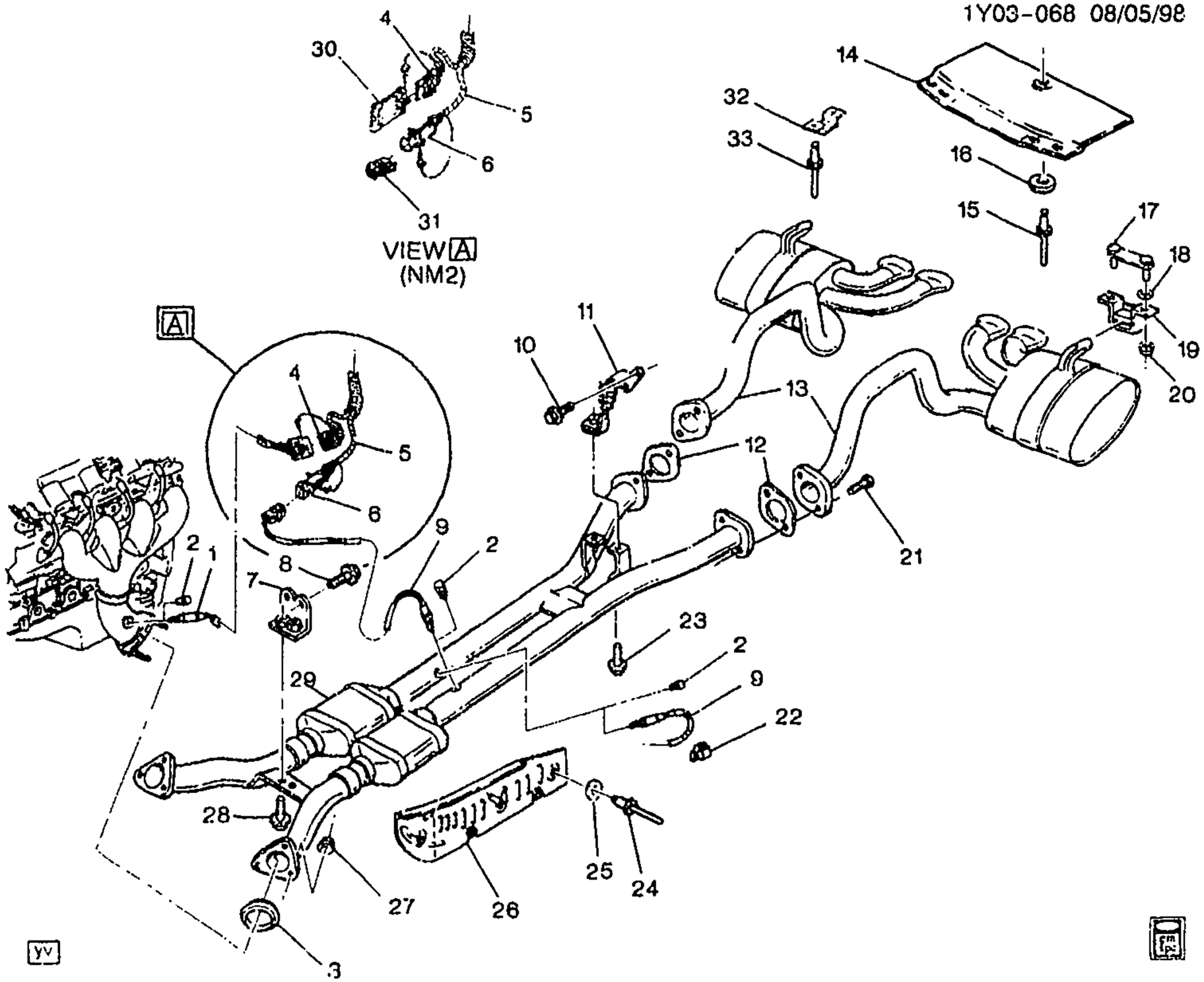

1Y03-068

1997 Y EXHAUST SYSTEM

1.	2-D24	3.682	SENSOR, HTD OXY (POSN #2) (PRE-CONVERTER) (AC-DELCO #AFS75)	97 Y	2	25312184
2.		8.971	PLUG-EXT, M18X1.5X10 TAPPERED 1:16, 19 OD, 22 OAL, SAE 1010/1012 (OXY SEN HOLE)	97	4	25509274
3.	2-D17	3.611	SEAL, EXH MANIF PIPE	97 Y	2	12555555
4.	2-D24	3.682	CONNECTOR, INLINE-TO OXY SEN (FRT) (4-WAY F) (W/LEADS, IN A ROW) (4.651) (AC-DELCO #PT368)	97 Y	2	12102741
5.	2-B14	2.525	HARNESS, ENG WRG	97 Y (M30)	1	12163328
	2-B14	2.525	HARNESS, ENG WRG	97 Y (MM6)	1	12163330
6.	2-D24	3.682	CONNECTOR, INLINE-TO OXY SEN (RR) (4-WAY M) (W/LEADS) (2.530) (AC-DELCO #PT919) ...	97 Y	2	15305801
7.	2-D18	3.616	BRACE, EXH PIPE (3.690)	97 Y	1	12552247

cardiagn.com

8.		8.900	BOLT, M10X1.5X30, 10.9, 7114M, 22 OD, HDR PT (EXH PIPE HNGR BRKT)	97		2	11516328
9.	2-D24	3.682	SENSOR, HTD OXY (POSN #3) (POST-CONVERTER) (AC-DELCO #AFS108)	97	Y	2	25312202
		N.S.	SEALER, OXY SEN				
10.		8.900	BOLT, M10X1.5X 25 POINTED, 21MM THD, 21.5 OD (POSN #2)	97		4	11515765
11.	2-D18	3.616	HANGER, EXH PIPE RR	97	Y	RH	10273796
	2-D18	3.616	HANGER, EXH PIPE RR	97	Y	LH	10273797
12.	2-D27	3.704	GASKET, EXH MUFF (BLACK)	97	Y	2	10276792
13.	2-D26	3.701	MUFFLER, EXH	97	Y	LH	12453571
	2-D26	3.701	MUFFLER, EXH	97	Y	RH	12455774
	2-D26	3.701	MUFFLER, EXH	97	Y	LH	88895874
14.	2-D27	3.705	SHIELD, EXH MUFF RR HT	97	Y	2	10295396
15.		8.967	RIVET, BLIND LG DOME, 1/8X0.255, 0.129- 0.133HOLE, 0.063-0.125 GRIP, 0.375 HD ODSTL, PZOR (EXH MUFF H/SHLD BRKT)	97		6	9441669
16.	2-D27	3.705	WASHER, EXH MUFF H/SHLD BRKT (SPR, CUP, 5.2X27.0X0.254, 4.5 TALL, SS, PL) (3.613)	97	Y	6	25525493
17.	2-D27	3.704	REINFORCEMENT, EXH MUFF HNGR	97	Y	2	10294002
18.		8.921	NUT, METRIC PUSH-ON BOLT RETAINING SPRING (POSN #2)	97	Y	2	10009923
19.	2-D27	3.704	INSULATOR, EXH MUFF HNGR	97	Y	2	10421196
20.		8.917	NUT, HFH, M8X1.25X8.8, 17.9 OD, 10 DIN, PREV TORQUE (POSN #1)	97	Y	4	11517031
21.	2-D18	3.616	BOLT, EXH PIPE RR HNGR (POSN #3) (HEX M10X1.5X35 10.9PC) (0.029)	97	Y	4	14060030
22.	2-B23	2.559	CLIP, OXY SEN LEAD	97	Y (EXC NM8)	6	12555072
23.		8.900	BOLT, HFH, M8X1.25X20, 17THD, 18OD (POSN #1)	97		2	11515756
24.		8.967	RIVET, BLIND LG DOME, 1/8X0.255, 0.129- 0.133HOLE, 0.063-0.125 GRIP, 0.375 HD ODSTL, PZOR (EXH PIPE H/SHLD)	97		8	9441669
25.	2-D18	3.616	WASHER, EXH PIPE H/SHLD (SPR, CUP, 5.2X27.0X0.254, 4.5 TALL, SS, PL) (3.613)	97	Y	8	25525493
26.	2-D26	3.690	SHIELD, CTLTC CONV HT	97	Y	LH	10259597
	2-D26	3.690	SHIELD, CTLTC CONV HT	97	Y	RH	10259598
27.		8.915	NUT, HFH, 10X1.5 6H THD, 21.3 OD, 9.8 THK 13 HEX DR, GRD 9, ZF (EXH C/OVR PIPE) (8.917)	97		6	10255857
28.		8.900	BOLT, M10X1.5X30, 10.9, 7114M, 22 OD, HDR PT (EXH PIPE HNGR)	97		2	11516328
29.	2-D25	3.685	CONVERTER, OXIDN CTLTC (W/EXH PIPE)	97	Y (NM8)	1	12534952

cardiagn.com

	2-D17	3.609	CONVERTER, OXIDN CTLTC (W/EXH PIPE) (3.685)	97	Y (NM8)	1	12534952
	2-D25	3.685	CONVERTER, OXIDN CTLTC (W/EXH PIPE)	97	Y	1	88896488
	2-D17	3.609	CONVERTER, OXIDN CTLTC (W/EXH PIPE) (3.685)	97	Y	1	88896488
30.	2-B23	2.559	COVER, ENG WRG HARN	97	Y (NM8) (EXPORT)	2	12124742
31.	2-B23	2.559	CAP, OXY SEN WRG HARN CONN (2-WAY) (W/O LEADS)	97	Y (NM8) (EXPORT)	2	12191286
32.	2-D17	3.602	BRACKET, EXH MUFF H/SHLD	97	Y	6	10296759
33.		N.S.	RIVET, EXH MUFF H/SHLD BRKT			2	

RPO DEFINITIONS
MM6 – TRANSMISSION MAN 6 SPD, BORG WARNER, 85MM, 1ST 2.66, 6TH 0.50, O/D
M30 – TRANSMISSION,AUTOMATIC 4 SPEED,4L60E,ELECTRONIC
NM8 – EMISSION SYSTEM,LEADED FUEL(EXPORT)

cardiagn.com

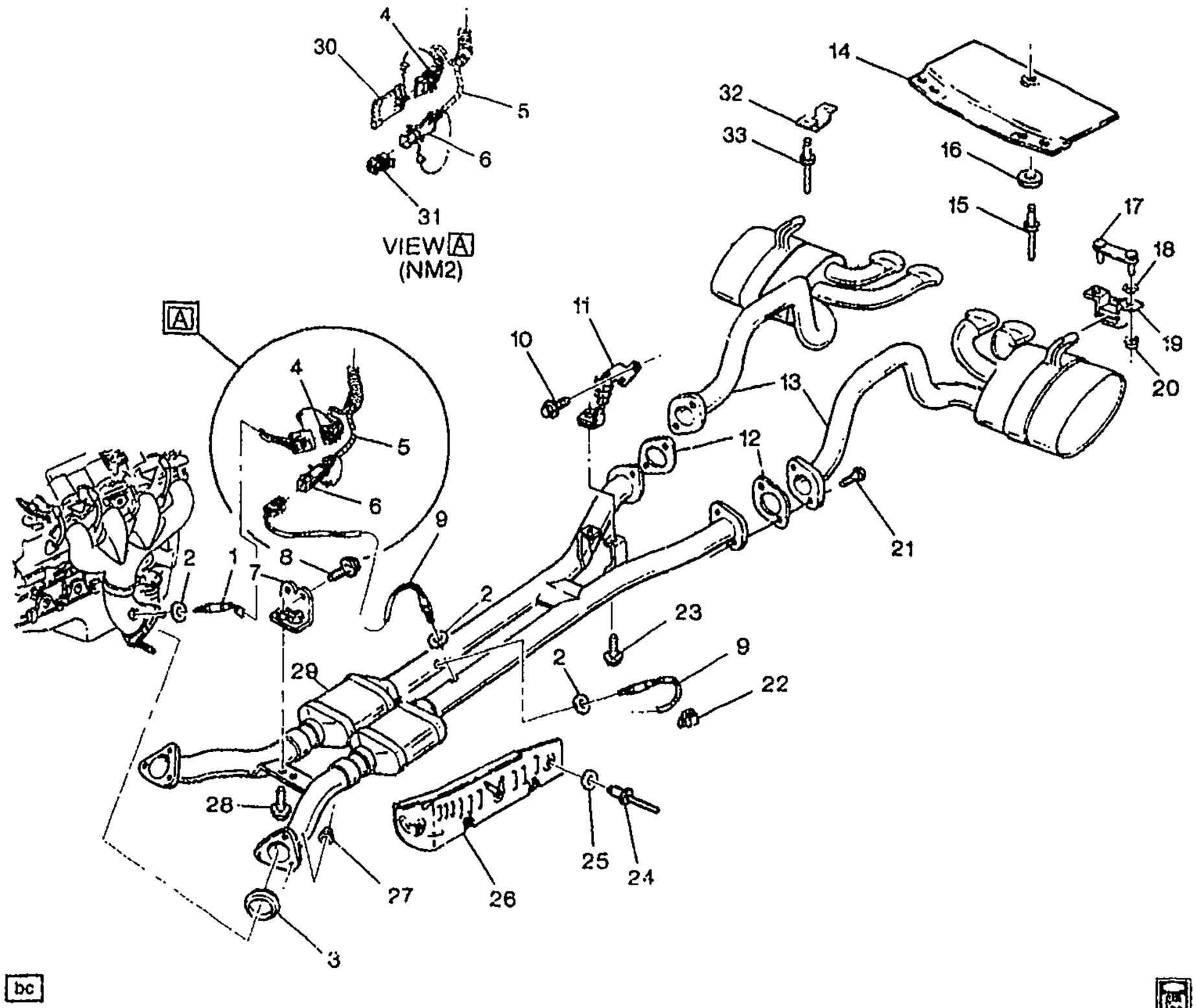

1Y03-079

1998-2002 Y EXHAUST SYSTEM

1.	2-D24	3.682	SENSOR, HTD OXY (POSN 2) (PRE-CONVERTER) (ENG-OUT) (AC-DELCO #AFS75)	98-02	Y	2	25312184
2.	2-D23	3.680	GASKET, OXY SEN	98-99	Y (EXC NM8)	AR	5617102
	2-D23	3.680	GASKET, OXY SEN	00	Y (NA3, NA7, NC1, NF2) (EXPORT)	AR	5617102
	2-D23	3.680	GASKET, OXY SEN	01-02	Y (NA3, NC1, NF7, NT3) (EXPORT)	AR	5617102
3.	2-D17	3.611	SEAL, EXH MANIF PIPE	98-02	Y	2	12555555
4.	2-D24	3.682	CONNECTOR, INLINE-TO OXY SEN (FRT) (4-WAY F) (W/LEADS, IN A ROW) (4.651) (AC-DELCO #PT368)	98-02	Y	2	12102741
5.	2-B14	2.525	HARNESS, ENG WRG	98	Y (M30) (EXC JAG)	1	12163328

cardiagn.com

	2-B14	2.525	HARNESS, ENG WRG	98	Y (MM6) (EXC JAG, VD1)	1	12163330
	2-B14	2.525	HARNESS, ENG WRG	98	Y (M30, JAG)	1	12163794
	2-B14	2.525	HARNESS, ENG WRG	98	Y (MM6, JAG) (EXC VD1)	1	12163795
	2-B14	2.525	HARNESS, ENG WRG	99-00	Y (MM6) (EXC VD1) ...	1	12189523
	2-B14	2.525	HARNESS, ENG WRG	99-00	Y (M30)	1	12189524
	2-B14	2.525	HARNESS, ENG WRG	01-02	Y (M30)	1	15329389
	2-B14	2.525	HARNESS, ENG WRG	01-02	Y (MM6)	1	15329391
	2-B14	2.525	HARNESS, ENG WRG	01-02	Y37 (LS6, M12)	1	15329391
	2-B14	2.525	HARNESS, ENG WRG	02	YY37	1	15329391
	2-B14	2.525	HARNESS, ENG WRG	98	Y (MM6, JAG, VD1) (EXPORT)	1	12189910
	2-B14	2.525	HARNESS, ENG WRG (ENHANCE EVAP EMISS)	99-00	Y (MM6, VD1) (EXPORT)	1	12189911
6.	2-D24	3.682	CONNECTOR, INLINE-TO OXY SEN (RR) (4-WAY M) (W/LEADS) (2.530) (AC-DELCO #PT919) ...	98-02	Y	2	15305801
7.	2-D18	3.616	BRACE, EXH PIPE (3.690)	98-02	Y	1	12552247
8.		8.900	BOLT, M10X1.5X30, 10.9, 7114M, 22 OD, HDR PT (EXH PIPE HNGR BRKT)	98-02	.....	2	11516328
9.	2-D24	3.682	SENSOR, HTD OXY (POSN 3) (CATALYST MONITORING) (POST-CONVERTER) (AC-DELCO #AFS108)	98-99	Y (LS1) (EXC NM8)	2	25312202
	2-D24	3.682	SENSOR, HTD OXY (POSN 3) (CATALYST MONITORING) (AC-DELCO #213-810)	00	Y (NC1, NF2)	2	25317697
	2-D24	3.682	SENSOR, HTD OXY (POSN 3) (CATALYST MONITORING) (AC-DELCO #213-810)	01-02	Y (NA3, NC1, NF7, NT3)	2	25317697
		N.S.	SEALER, OXY SEN		.....		
	2-D24	3.682	SENSOR, HTD OXY (POSN 3) (CATALYST MONITORING) (AC-DELCO #213-810) .	00	Y (NA3, NA7) (EXPORT)	2	25317697
10.		8.900	BOLT, M10X1.5X 25 POINTED, 21MM THD, 21.5 OD (POSN #2) .	98-02	.....	4	11515765
11.	2-D18	3.616	HANGER, EXH PIPE RR	98-02	Y	RH	10273796
	2-D18	3.616	HANGER, EXH PIPE RR	98-02	Y	LH	10273797
12.	2-D27	3.704	GASKET, EXH MUFF (BLACK) ...	98-02	Y	2	10276792
13.	2-D26	3.701	MUFFLER, EXH	98-99	Y	LH	12453571
	2-D26	3.701	MUFFLER, EXH	98-99	Y	RH	12455774
	2-D26	3.701	MUFFLER, EXH	98-99	Y	LH	88895874
	2-D26	3.701	MUFFLER, EXH	00	Y (NC1)	RH	12455778
	2-D26	3.701	MUFFLER, EXH	00	Y (NC1)	LH	12455779
	2-D26	3.701	MUFFLER, EXH (W/TAIL PIPE) (.8MM THICKNESS OF MUFFLER)	01	Y37 (NC1, NF7)	LH	10303856
	2-D27	3.705	MUFFLER, EXH (W/TAIL PIPE) (.8MM THICKNESS OF MUFFLER) (3.701)	01	Y37 (NC1, NF7)	LH	10303856
	2-D26	3.701	MUFFLER, EXH (W/TAIL PIPE) (1.1MM THICKNESS OF MUFFLER)	01	Y37 (NC1, NF7)	LH	10318352

cardiagn.com

	2-D27	3.705	MUFFLER, EXH (W/TAIL PIPE) (1.1MM THICKNESS OF MUFFLER) (3.701)	01	Y37 (NC1, NF7)	LH	10318352
	2-D26	3.701	MUFFLER, EXH (W/TAIL PIPE) (.8MM MUFFLER THICKNESS)	01	Y37 (NC1, NF7)	RH	10318353
	2-D27	3.705	MUFFLER, EXH (W/TAIL PIPE) (.8MM MUFFLER THICKNESS) (3.701)	01	Y37 (NC1, NF7)	RH	10318353
	2-D26	3.701	MUFFLER, EXH (W/TAIL PIPE) (1.1MM MUFFLER THICKNESS)	01	Y37 (NC1, NF7)	RH	10303853
	2-D27	3.705	MUFFLER, EXH (W/TAIL PIPE) (1.1MM MUFFLER THICKNESS) (3 701)	01	Y37 (NC1, NF7)	RH	10303853
	2-D26	3.701	MUFFLER, EXH	00	Y (NA3, NA7, NF2) (EXPORT)	RH	12455774
	2-D26	3.701	MUFFLER, EXH	00	Y (NM2) (EXPORT)	RH	12455774
	2-D26	3.701	MUFFLER, EXH	00	Y (NA3 NA7, NF2) (EXPORT)	LH	88895874
	2-D26	3.701	MUFFLER, EXH	00	Y (NM2) (EXPORT)	LH	88895874
	2-D26	3.701	MUFFLER, EXH	01-02	Y07-67 (NA3, NC1, NF7, NT3) (EXPORT)	RH	88895880
	2-D26	3.701	MUFFLER, EXH	01-02	Y07-67 (NA3, NC1, NF7, NT3) (EXPORT)	LH	88895881
	2-D26	3.701	MUFFLER, EXH	01-02	Y07-67 (NM2) (EXPORT)	RH	88895883
	2-D26	3.701	MUFFLER, EXH	01-02	Y07-67 (NM2) (EXPORT)	LH	88895884
14.	2-D27	3.705	SHIELD, EXH MUFF RR HT	98-02	Y	2	10295396
15.		8.967	RIVET, BLIND LG DOME, 1/8X0.255, 0.129- 0.133HOLE, 0.063-0.125 GRIP, 0.375 HD ODSTL, PZOR (EXH MUFF H/SHLD BRKT)	98-02		6	9441669
16.	2-D27	3.705	WASHER, EXH MUFF H/SHLD BPKT (SPR, CUP, 5.2X27.0X0.254, 4.5 TALL, SS, PL) (3.613)	98-02	Y	6	25525493
17.	2-D27	3.704	REINFORCEMENT, EXH MUFF HNGR	98-02	Y	2	10294002
18.		8.921	NUT, METRIC PUSH-ON BOLT RETAINING SPRING (POSN #2)	98-02	Y	2	10009923
19.	2-D27	3.704	INSULATOR, EXH MUFF HNGR	98-00	Y	2	10421196
	2-D27	3.704	INSULATOR, EXH MUFF HNGR	01-02	Y	2	10429800
20.		8.917	NUT, HFH, M8X1.25X8.8, 17.9 OD, 10 DIN, PREV TORQUE (POSN #1)	98-02	Y	4	11517031
21.		8.900	BOLT, HEX M10X1.5X35 10.9 PC (POSN #3)) (0.029)	98-02	Y	4	14060030
22.	2-B23	2.559	CLIP, OXY SEN LEAD	98	Y (EXC NM8)	6	12555072
	2-B23	2.559	CLIP, OXY SEN LEAD	99	Y (NA3, NA7, NB6, NF2) (EXPORT)	6	12555072
	2-B23	2.559	CLIP, OXY SEN LEAD	00	Y (NA3, NA7, NC1, NF2) (EXPORT)	6	12555072
	2-B23	2.559	CLIP, OXY SEN LEAD	01-02	Y (NA3, NC1, NF7, NT3) (EXPORT)	6	12555072
23.		8.900	BOLT, HFH, M8X1.25X20, 17THD, 18OD (POSN #1)	98-02		2	11515756

cardiagn.com

24.		8.967	RIVET, BLIND LG DOME, 1/8X0.255, 0.129– 0.133HOLE, 0.063–0.125 GRIP, 0.375 HD ODSTL, PZOR (EXH PIPE H/SHLD)	98–02		8	9441669
25.	2–D18	3.616	WASHER, EXH PIPE H/SHLD (SPR, CUP, 5.2X27.0X0.254, 4.5 TALL, SS, PL) (3.613)	98–02	Y	8	25525493
26.	2–D26	3.690	SHIELD, CTLTC CONV HT	98–02	Y	LH	10259597
	2–D26	3.690	SHIELD, CTLTC CONV HT	98–02	Y	RH	10259598
27.		8.915	NUT, HFH, 10X1.5 6H THD, 21.3 OD, 9.8 THK 13 HEX DR, GRD 9, ZF (EXH C/OVR PIPE) (8.917)	98–02		6	10255857
28.		8.900	BOLT, M10X1.5X30, 10.9, 7114M, 22 OD, HDR PT (EXH PIPE HNGR)	98–02		2	11516328
29.	2–D25	3.685	PIPE, CTLTC CONV	02	YY37 (NC1, NF7)	1	10439825
	2–D17	3.609	PIPE, CTLTC CONV (3.685)	02	YY37 (NC1, NF7)	1	10439825
	2–D25	3.685	CONVERTER, OXIDN CTLTC (W/EXH PIPE)	98	Y	1	88896488
	2–D17	3.609	CONVERTER, OXIDN CTLTC (W/EXH PIPE) (3.685)	98	Y	1	88896488
	2–D25	3.685	CONVERTER, OXIDN CTLTC (W/EXH PIPE)	98	Y (NM8)	1	12458423
	2–D17	3.609	CONVERTER, OXIDN CTLTC (W/EXH PIPE) (3.685)	98	Y (NM8)	1	12458423
	2–D25	3.685	CONVERTER, OXIDN CTLTC (W/EXH PIPE)	99	Y (EXC NM8)	1	88896488
	2–D17	3.609	CONVERTER, OXIDN CTLTC (W/EXH PIPE) (3.685)	99	Y (EXC NM8)	1	88896488
	2–D17	3.609	CONVERTER, OXIDN CTLTC (W/EXH PIPE) (3.685)	00	Y (NC1)	1	12455780
	2–D25	3.685	CONVERTER, OXIDN CTLTC (W/EXH PIPE)	00	Y (NF2)	1	88895875
	2–D25	3.685	CONVERTER, OXIDN CTLTC (W/EXH PIPE)	01	Y37 (NC1, NF7)	1	10426194
	2–D17	3.609	CONVERTER, OXIDN CTLTC (W/EXH PIPE) (3.685)	01	Y37 (NC1, NF7)	1	10426194
	2–D25	3.685	CONVERTER, OXIDN CTLTC (W/EXH PIPE)	99	Y (NM2) (EXPORT)	1	12458423
	2–D17	3.609	CONVERTER, OXIDN CTLTC (W/EXH PIPE) (3.685)	99	Y (NM2) (EXPORT)	1	12458423
	2–D25	3.685	CONVERTER, OXIDN CTLTC (W/EXH PIPE)	00	Y (NM2) (EXPORT)	1	12455777
	2–D25	3.685	CONVERTER, OXIDN CTLTC (W/EXH PIPE)	00	Y (NA3, NA7) (EXPORT)	1	88895875
	2–D25	3.685	CONVERTER, OXIDN CTLTC (W/EXH PIPE)	01	Y07–67 (NA3, NC1, NF7, NT3) (EXPORT)	1	88895882
	2–D17	3.609	CONVERTER, OXIDN CTLTC (W/EXH PIPE) (3.685)	01–02	Y07–67 (NA3, NC1, NF7, NT3) (EXPORT)	1	88895882
	2–D25	3.685	CONVERTER, OXIDN CTLTC (W/EXH PIPE)	01–02	Y07–67 (NM2) (EXPORT)	1	88895885
	2–D17	3.609	CONVERTER, OXIDN CTLTC (W/EXH PIPE) (3.685)	01–02	Y07–67 (NM2) (EXPORT)	1	88895885
30.	2–B23	2.559	COVER, ENG WRG HARN	98	Y (NM8) (EXPORT)	2	12124742
	2–B23	2.559	COVER, ENG WRG HARN	99–02	Y (NM2) (EXPORT)	2	12124742
31.	2–B23	2.559	CAP, OXY SEN WRG HARN CONN (2–WAY) (W/O LEADS)	98	Y (NM8) (EXPORT)	2	12191286

cardiagn.com

	2-B23	2.559	CAP, OXY SEN WRG HARN CONN (2-WAY) (W/O LEADS) ...	99-02	Y (NM2) (EXPORT)	2	12191286
32.	2-D17	3.602	BRACKET, EXH MUFF H/SHLD ..	98-02	Y	6	10296759
33.		N.S.	RIVET, EXH MUFF H/SHLD BRKT		.....	2	

RPO DEFINITIONS
JAG – BRAKE PROVISIONS ABS LOCATION
LS1 – ENGINE GAS, 8 CYL, 5.7L, SFI, ALUMINUM ENGINE
LS6 – ENGINE GAS, 8 CYL, 5.7L, SFI, ALUMINUM, HIGH OUTPUT
MM6 – TRANSMISSION MAN 6 SPD, BORG WARNER, 85MM, 1ST 2.66, 6TH 0.50, O/D
M12 – TRANSMISSION MAN 6 SPD, TREMEC, 85MM, 1ST 2.97, 6TH 0.57, O/D
M30 – TRANSMISSION,AUTOMATIC 4 SPEED,4L60E,ELECTRONIC
NA3 – EMISSION SYSTEM JAPAN
NA7 – EMISSION SYSTEM EUROPEAN
NB6 – EMISSION SYSTEM CALIFORNIA,TIER 1
NC1 – EMISSION SYSTEM CALIFORNIA, LEV
NF2 – EMISSION SYSTEM,FEDERAL TIER 1
NF7 – EMISSION SYSTEM FEDERAL, NLEV
NM2 – EMISSION SYSTEM EXPORT, LEADED FUEL
NM8 – EMISSION SYSTEM,LEADED FUEL(EXPORT)
NT3 – EMISSION SYSTEM EEC 00
VD1 – PROVISION OPTIONS,EUROPE(EXPORT)

cardiagn.com

ILLUSTRATION INDEX

	TITLE	GRID
1997–2002	Y 6–SPEED MANUAL TRANSMISSION ASSEMBLY(MM6)	2–L4
2001–2002	Y 6–SPEED MANUAL TRANSMISSION ASSEMBLY(M12)	2–L12
1997–2000	Y SHIFT CONTROLS/MANUAL TRANSMISSION (MM6)	2–L20
2001–2002	Y SHIFT CONTROLS/MANUAL TRANSMISSION (MM6,M12)	2–L20

cardiagn.com

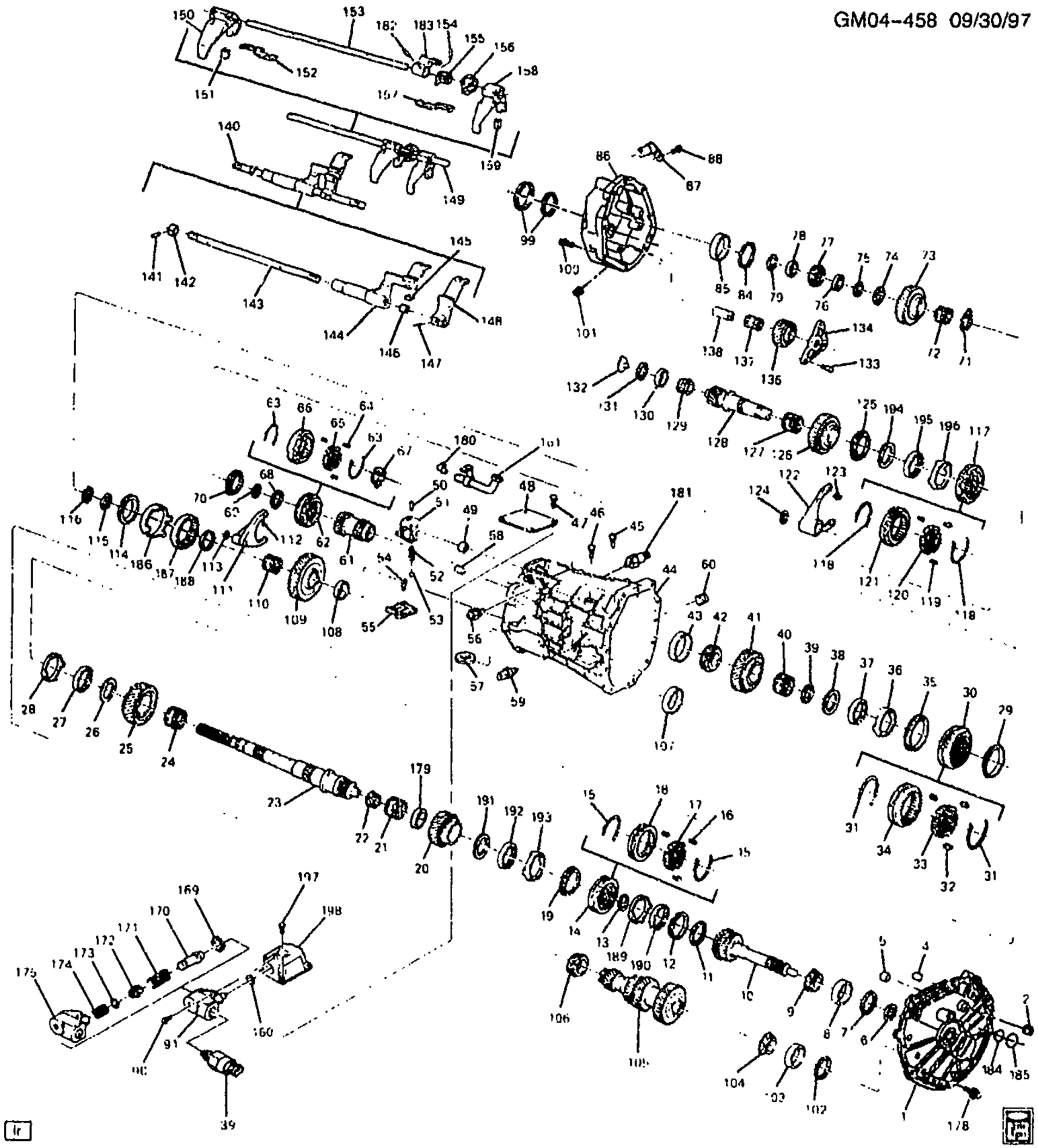

GM04-458

1997-2002 Y 6-SPEED MANUAL TRANSMISSION ASSEMBLY(MM6)

1.	2-E11	4.083	PLATE, TRANS FRT ADAP	97-02	Y (MM6)	1	12455019
	2-E13	4.303	CAM, SHFT SHF DTNT	97-02	Y (MM6)	1	12455029
	2-E13	4.303	PIN, SHFT SHF DTNT CAM PIV ..	97-02	Y (MM6)	1	12455030
	2-E13	4.303	SPRING, SHFT SHF DTNT CAM .	97-02	Y (MM6)	1	12455031
	2-E13	4.303	WASHER, SHFT SHF DTNT CAM	97-02	Y (MM6)	1	12455032

cardiagn.com

	2-E10	4.010	BOLT, M/TRNS CONT LVR HSG (CENTERING CAM SPRING) (M8X1.25X20) (4.012)	97-02	Y (MM6)	4	15546805
2.	2-E12	4.104	PLUG, TRANS FRT ADAPT INSP (8.971)	97-02	Y (MM6)	1	12387621
4.	2-E12	4.104	PIN, TRANS CASE LOC (DOWEL) (0.685)	97-02	Y (MM6)	2	12523068
5.	2-E14	4.309	BUSHING, TOP SHFT RL	97-02	Y (MM6)	2	12523001
6.	2-E15	4.354	SEAL, INPUT SHF	97-02	Y (MM6)	1	15635337
7.	2-E16	4.376	SHIM, INPUT SHF BRG (.022MM)	97-02	Y (MM6)	AR	12523218
	2-E16	4.376	SHIM, INPUT SHF BRG (.026MM)	97-02	Y (MM6)	AR	12523220
	2-E16	4.376	SHIM, INPUT SHF BRG (.028MM)	97-02	Y (MM6)	AR	12523221
	2-E16	4.376	SHIM, INPUT SHF BRG (.030MM)	97-02	Y (MM6)	AR	12523222
	2-E16	4.376	SHIM, INPUT SHF BRG (.032MM)	97-02	Y (MM6)	AR	12523223
	2-E16	4.376	SHIM, INPUT SHF BRG (.034MM)	97-02	Y (MM6)	AR	12523224
	2-E16	4.376	SHIM, INPUT SHF BRG (.036MM)	97-02	Y (MM6)	AR	12523225
	2-E16	4.376	SHIM, INPUT SHF BRG (.038MM)	97-02	Y (MM6)	AR	12523226
	2-E16	4.376	SHIM, INPUT SHF BRG (.040MM)	97-02	Y (MM6)	AR	12523227
	2-E16	4.376	SHIM, INPUT SHF BRG (.042MM)	97-02	Y (MM6)	AR	12523228
	2-E16	4.376	SHIM, INPUT SHF BRG (.044MM)	97-02	Y (MM6)	AR	12523229
	2-E16	4.376	SHIM, INPUT SHF BRG (.046MM)	97-02	Y (MM6)	AR	12523230
	2-E16	4.376	SHIM, INPUT SHF BRG (.048MM)	97-02	Y (MM6)	AR	12523231
	2-E16	4.376	SHIM, INPUT SHF BRG (.050MM)	97-02	Y (MM6)	AR	12523232
8.		N.S.	RACE, INPUT SHAFT BEARING (PART OF 9)				
9.	2-E15	4.355	BEARING, MAIN DRV GR (INCL 8)	97-02	Y (MM6)	1	12523289
10.	2-E15	4.351	SHAFT, INPUT (4.403)	97-02	Y (MM6)	1	88894115
11.		N.S.	RACE, INPUT SHAFT BEARING (*KIT1)				
12.	2-E17	4.383	RING, 4TH GR BLOCKING	97-02	Y (MM6)	1	12455018
13.	2-E18	4.384	WASHER, 3RD & 4TH GR SYN HUB THR	97-02	Y (MM6)	2	12455003
14.	2-E17	4.380	SYNCHRONIZER, 3RD & 4TH GR (INCL 15 THRU 18)	97-02	Y (MM6)	1	12455002
15.	2-E18	4.384	SPRING, SYN (3RD/4TH) (PART OF 14)	97-02	Y (MM6)	2	12523185
16.	2-E20	4.416	KEY, 3RD & 4TH GR (PART OF 14) (WINGED FLANGES ON SIDES OF KEY) (4.384)	97-02	Y (MM6)	3	14083521
17.		N.S.	HUB, 3RD/4TH SYC (PART OF 14)				
18.		N.S.	SLEEVE, 3RD/4TH SYC (PART OF 14)				
19.	2-E17	4.383	RING, 3RD GR BLOCKING (4.416)	97-02	Y (MM6)	1	12455000
20.	2-E19	4.415	GEAR, 3RD	97-01	Y (MM6)	1	12454998
	2-E19	4.415	GEAR, 3RD	02	Y (MM6)	1	88894114
21.	2-E15	4.355	BEARING, 3RD GR	97-02	Y (MM6)	1	12523073
22.		N.S.	BEARING, MAINSHAFT SMALL TAPERED (*KIT1)				
23.	2-E19	4.403	SHAFT, MAIN (OUTPUT)	97-02	Y (MM6)	1	12454996
24.	2-E15	4.355	BEARING, 2ND GR	97-02	Y (MM6)	1	12523073
25.	2-E18	4.395	GEAR, 2ND	97-02	Y (MM6)	1	12455004
26.	2-E19	4.412	SPACER, 2ND GR BRG	97-02	Y (MM6)	1	12455005
27.	2-E17	4.383	CONE, 2ND GR SYN INR (W/18 INNER GROOVES)	97-02	Y (MM6)	1	12455010

cardiagn.com

28.	2-E17	4.383	CONE, 2ND GR SYN OTR (W/12 INNER GROOVES)	97-02	Y (MM6)	1	12455011
29.	2-E17	4.383	RING, 2ND GR BLOCKING	97-02	Y (MM6)	1	12455009
30.	2-E17	4.380	SYNCHRONIZER, 1ST & 2ND GR (INCL 31 THRU 34)	97-02	Y (MM6)	1	12455006
31.	2-E18	4.384	SPRING, SYN (PART OF 30)	97-02	Y (MM6)	2	12455008
32.	2-E18	4.384	INSERT, 1ST & 2ND GR SYN (PART OF 30)	97-02	Y (MM6)	1	12455007
33.		N.S.	HUB, 1ST/2ND SYN) (PART OF 30)				
34.		N.S.	SLEEVE, 1ST/2ND SYN) (PART OF 30)				
35.	2-E17	4.383	RING, 1ST GR BLOCKING	97-02	Y (MM6)	1	12455009
36.	2-E17	4.383	CONE, 1ST GR SYN OTR (W/12 INNER GROOVES)	97-02	Y (MM6)	1	12455011
37.	2-E17	4.383	CONE, 1ST GR SYN INR (W/18 INNER GROOVES)	97-02	Y (MM6)	1	12455010
38.	2-E18	4.384	RING, TRANS SYN RET (1ST & 2ND GEAR) (4.318)	97-02	Y (MM6)	1	12523187
39.	2-E20	4.419	SPACER, 1ST GR BRG RLR	97-02	Y (MM6)	1	12455012
40.	2-E15	4.355	BEARING, 1ST GR (4.383)	97-02	Y (MM6)	1	12523188
41.	2-E20	4.417	GEAR, 1ST (AC-DELCO #12455013)	97-02	Y (MM6)	1	12455013
42.	2-E19	4.408	BEARING, MAIN SHF RR (INCL 43) (W/TAPPERED ROLLERS)	97-02	Y (MM6)	1	12523286
43.		N.S.	RACE, MAINSHAFT BEARING (PART OF 42)				
44.	2-E12	4.103	CASE, TRANS (INCL 57)	97-02	Y (MM6)	1	12523067
45.	2-E14	4.309	BOLT, REV SHFT SHF GDE	97-02	Y (MM6)	2	12523213
46.	2-E14	4.309	BOLT, REV SHFT SHF GDE	97-02	Y (MM6)	2	12523213
47.	2-E10	4.010	BOLT, M/TRNS CONT LVR HSG (M8X1.25X20) (4.012)	97-02	Y (MM6)	4	15546805
48.	2-E12	4.105	PLATE, TRANS FRT SHIFTER CVR	97-02	Y (MM6)	1	12455046
49.	2-E14	4.309	BUSHING, TOP SHFT RL	97-02	Y (MM6)	2	12523001
50.	2-E13	4.307	PIN, 1ST & 2ND SHFT FORK (3/16 X 13/16 ROLL) (8.939)	97-02	Y (MM6)	1	454512
51.	2-E12	4.302	LEVER, SKIP SHFT LVR	97-02	Y (MM6)	1	12455033
52.	2-E14	4.311	SPRING, SHFT DTNT BALL	97-02	Y (MM6)	1	12523242
53.		8.899	BALL, 3/8 STEEL (AC-DELCO #7826284)	97-02		AR	7826284
54.	2-E13	4.303	BOLT, SHFT GDE PLT	97-02	Y (MM6)	2	12523243
55.	2-E14	4.311	PLATE, SHFT GDE DTNT	97-02	Y (MM6)	1	12523236
56.	2-E12	4.302	LEVER, OFFSET SHFT	97-02	Y (MM6)	1	12455056
57.	2-E12	4.105	MAGNET, TRANS (PART OF 44) (AC-DELCO #12386078)	97-02	Y (MM6)	2	12386078
58.	2-E12	4.104	PIN, TRANS CASE LOC (DOWEL) (0.685)	97-02	Y (MM6)	2	12523068
59.	2-B27	2.698	SWITCH, B/U LP (M16X1.5 THD)	97-02	Y (LS1, MM6)	1	14069600
60.	2-E12	4.104	PLUG, TRANS OIL FIL (8.971)	97-02	Y (MM6)	1	12387621
61.	2-E19	4.415	GEAR, 5TH	97-02	Y (MM6)	1	12523042
62.	2-E17	4.380	SYNCHRONIZER, REV GR (INCL 63 THRU 67)	97-02	Y (MM6)	1	12523043
63.	2-E18	4.384	SPRING, SYN (5-6 & REVERSE)	97-02	Y (MM6)	2	12523251
64.	2-E18	4.384	KEY, 5TH & 6TH & REV SYN (WINGED FLANGES ON SIDES OF KEY)	97-02	Y (MM6)	3	14083521

cardiagn.com

65.		N.S.	HUB, REV SYN (PART OF 62)				
66.		N.S.	SLEEVE, REV SYN (PART OF 62)				
67.	2-E18	4.384	RETAINER, REV GR SYN INSERT (PART OF 62)	97-02	Y (MM6)	1	12523044
68.	2-E20	4.419	WASHER, REV GR THR (PEEK)	97-02	Y (MM6)	1	12523047
69.	2-E18	4.384	RING, TRANS SYN RET (REVERSE) (4.318)	97-02	Y (MM6)	1	12523253
70.	2-E17	4.383	RING, REV GR BLOCKING (4.384)	97-02	Y (MM6)	1	12523049
71.	2-E20	4.419	WASHER, REV GR (LOCATED BETWEEN REV GR & SYNCHRO ASM)	97-02	Y (MM6)	1	12523048
72.	2-E24	4.431	BEARING, REV GR	97-02	Y (MM6)	1	12523050
73.	2-E20	4.417	GEAR, REV (TRANS MAIN SHF)	97-02	Y (MM6)	1	12523052
74.	2-E20	4.419	WASHER, REV GR THR (LOCATED BETWEEN REV GR & REAR MAINSHAFT)	97-02	Y (MM6)	1	12523053
75.	2-E18	4.384	RING, TRANS SYN RET (5-6 SYN HUB) (4.318)	97-02	Y (MM6)	1	12523253
76.	2-E24	4.426	SPACER, 5TH & 6TH CNTR GR (4.416)	97-02	Y (MM6)	2	12455040
77.	2-E19	4.408	BEARING, MAIN SHF RR (INCL 85) (W/STRAIGHT ROLLERS)	97-02	Y (MM6)	1	12523057
78.	2-E24	4.426	SPACER, 5TH & 6TH CNTR GR (4.416)	97-02	Y (MM6)	2	12455040
79.	2-E19	4.412	RING, MAIN SHF RR BRG RET	97-02	Y (MM6)	1	12523058
84.	2-E19	4.412	RING, MAIN SHF RR BRG RET	97-02	Y (MM6)	1	12523058
85.		N.S.	RACE, MAINSHAFT BEARING (PART OF 77)				
86.	2-E15	4.317	EXTENSION, TRANS	97-02	Y (MM6)	1	12455042
87.	2-N13	4.329	SENSOR, VEH SPD (AC-DELCO #213-344)	97-01	Y	1	12369458
	2-N13	4.329	SENSOR, VEH SPD (AC-DELCO #213-344)	02	Y (LS1, M30, MM6, GU2, GU6, G90)	1	12369458
88.	2-N13	4.329	BOLT, VEH SPD SEN (AC-DELCO #12369459)	97-01	Y	1	12369459
	2-N13	4.329	BOLT, VEH SPD SEN (AC-DELCO #12369459)	02	Y (LS1, M30, MM6, GU2, GU6, G90)	1	12369459
89.	2-E13	4.307	SOLENOID, REV LOCKOUT	97-02	Y (MM6)	1	12523300
	2-E13	4.307	SEAL, REV LOCKOUT SOL (O RING)	97-02	Y (MM6)	1	12523293
90.	2-E13	4.307	BOLT, REV LOCKOUT MTG	97-02	Y (MM6)	1	12523302
91.	2-E13	4.307	LOCKOUT, REV (INCL 169 THRU 175)	97-02	Y (MM6)	1	12523298
99.	2-E19	4.399	SEAL, MAIN SHF INR	97-02	Y (MM6)	1	12455044
	2-E19	4.399	SEAL, MAIN SHF OTR	97-02	Y (MM6)	1	12455045
100.	2-E15	4.317	STUD, TRANS EXTN	97-02	Y (MM6)	1	12455043
101.	2-E12	4.104	PLUG, TRANS OIL DRN (8.971)	97-02	Y (MM6)	1	12387621
102.	2-E20	4.422	SHIM, CNTR GR BRG (.014 THK) (4.376)	97-02	Y (MM6)	AR	14050780
	2-E20	4.422	SHIM, CNTR GR BRG (.016 THK) (4.376)	97-02	Y (MM6)	AR	14050781
	2-E20	4.422	SHIM, CNTR GR BRG (.018 THK) (4.376)	97-02	Y (MM6)	AR	14050782
	2-E20	4.422	SHIM, CNTR GR BRG (.012 THK) (4.376)	97-02	Y (MM6)	AR	14050783
	2-E20	4.422	SHIM, CNTR GR BRG (.020 THK) (4.376)	97-02	Y (MM6)	AR	14050784

cardiagn.com

	2-E20	4.422	SHIM, CNTR GR BRG (.036 THK) (4.376)	97-02	Y (MM6)		AR	14050785
	2-E20	4.422	SHIM, CNTR GR BRG (.024 THK) (4.376) (AC-DELCO #14069868)	97-02	Y (MM6)		AR	14069868
	2-E20	4.422	SHIM, CNTR GR BRG (.025 THK) (4.376) (AC-DELCO #14069869)	97-02	Y (MM6)		AR	14069869
	2-E20	4.422	SHIM, CNTR GR BRG (.026 THK) (4.376) (AC-DELCO #14069870)	97-02	Y (MM6)		AR	14069870
	2-E20	4.422	SHIM, CNTR GR BRG (.027 THK) (4.376) (AC-DELCO #14069871)	97-02	Y (MM6)		AR	14069871
	2-E20	4.422	SHIM, CNTR GR BRG (.028 THK) (4.376) (AC-DELCO #14069872)	97-02	Y (MM6)		AR	14069872
	2-E20	4.422	SHIM, CNTR GR BRG (.029 THK) (4.376) (AC-DELCO #14069873)	97-02	Y (MM6)		AR	14069873
	2-E20	4.422	SHIM, CNTR GR BRG (.030 THK) (4.376) (AC-DELCO #14069874)	97-02	Y (MM6)		AR	14069874
	2-E20	4.422	SHIM, CNTR GR BRG (.031 THK) (4.376) (AC-DELCO #14069875)	97-02	Y (MM6)		AR	14069875
	2-E20	4.422	SHIM, CNTR GR BRG (.032 THK) (4.376) (AC-DELCO #14069876)	97-02	Y (MM6)		AR	14069876
	2-E20	4.422	SHIM, CNTR GR BRG (.033 THK) (4.376) (AC-DELCO #14069877)	97-02	Y (MM6)		AR	14069877
	2-E20	4.422	SHIM, CNTR GR BRG (.034 THK) (4.376) (AC-DELCO #14069878)	97-02	Y (MM6)		AR	14069878
	2-E20	4.422	SHIM, CNTR GR BRG (.035 THK) (4.376) (AC-DELCO #14069879)	97-02	Y (MM6)		AR	14069879
	2-E20	4.422	SHIM, CNTR GR BRG (.037 THK) (4.376) (AC-DELCO #14069880)	97-02	Y (MM6)		AR	14069880
	2-E20	4.422	SHIM, CNTR GR BRG (.038 THK) (4.376) (AC-DELCO #14069881)	97-02	Y (MM6)		AR	14069881
	2-E20	4.422	SHIM, CNTR GR BRG (.039 THK) (4.376) (AC-DELCO #14069882)	97-02	Y (MM6)		AR	14069882
	2-E20	4.422	SHIM, CNTR GR BRG (.040 THK) (4.376) (AC-DELCO #14069883)	97-02	Y (MM6)		AR	14069883
103.		N.S.	RACE, COUNTERSHAFT BEARING (PART OF 104)					
104.	2-E20	4.422	BEARING, CNTR GR FRT (INCL 103)	97-02	Y (MM6)		1	12523054
105.	2-E20	4.421	GEAR KIT, CNTR (INCL 128)	97-02	Y (MM6)		1	12455055
106.	2-E20	4.422	BEARING, CNTR GR RR (INCL 107)	97-02	Y (MM6)		1	12523216
107.		N.S.	RACE, COUNTERSHAFT BEARING) (PART OF 106)					
108.	2-E24	4.426	SPACER, 5TH & 6TH CNTR GR (6TH SPD) (4.416)	97-02	Y (MM6)		2	12455040
109.	2-E19	4.415	GEAR, 6TH	97-02	Y (MM6)		1	12455041
110.	2-E20	4.422	BEARING, CNTR GR (4.355)	97-02	Y (MM6)		1	12523255
111.	2-E13	4.303	FORK, REV SHFT (REVERSE) (INCL 112)	97-02	Y (MM6)		1	12523288
112.	2-E14	4.312	INSERT, REV SHFT FORK (PART OF 111)	97-02	Y (MM6)		2	12523233
113.	2-E14	4.312	RING, REV SHFT FORK RET (4.422)	97-02	Y (MM6)		1	12523055
114.	2-E17	4.383	RING, 6TH GR BLOCKING	97-02	Y (MM6)		1	12455036
115.	2-E24	4.426	SPACER, 5TH & 6TH CNTR GR (6TH SPD) (4.416)	97-02	Y (MM6)		2	12455040
116.	2-E18	4.384	RING, TRANS SYN RET (5-6 SYN HUB) (4.318)	97-02	Y (MM6)		1	12523253

cardiagn.com

117.	2-E17	4.380	SYNCHRONIZER, 5TH & 6TH GR (INCL 118 THRU 121)	97-02	Y (MM6)	1	12455035
118.	2-E18	4.384	SPRING, SYN (5-6 REV) (PART OF 117)	97-02	Y (MM6)	2	12523251
119.	2-E18	4.384	KEY, 5TH & 6TH & REV SYN (PART OF 117) (WINGED FLANGES ON SIDES OF KEY)	97-02	Y (MM6)	3	14083521
120.		N.S.	HUB, 5TH/6TH SYN (PART OF 117)				
121.		N.S.	SLEEVE, 5TH/6TH SYN (PART OF 117)				
122.	2-E13	4.303	FORK, 5TH & 6TH SHFT (INCL 123)	97-02	Y (MM6)	1	12523258
123.	2-E14	4.312	INSERT, 5TH & 6TH SHFT FORK (PART OF 122)	97-02	Y (MM6)	2	12523233
124.	2-E18	4.384	RING, 5TH GR SYN RET (.89 ID)	97-02	Y (MM6)	1	12541299
125.	2-E17	4.383	RING, 5TH GR BLOCKING	97-02	Y (MM6)	1	12455036
126.	2-E19	4.415	GEAR, 5TH (DRV)	97-02	Y (MM6)	1	12455034
127.	2-E15	4.355	BEARING, 5TH GR	97-02	Y (MM6)	1	12523247
128.		N.S.	GEAR, 5TH CNTR (PART OF 105)				
129.	2-E15	4.317	BEARING, CTSHF EXTN (INCL 130)	97-02	Y (MM6)	1	12523059
130.		N.S.	RACE, CTSF EXT BEARING (PART OF 129)				
131.	2-E20	4.422	SHIM, FRT CTSHF EXTN BRG (.022MM)	97-02	Y (MM6)	AR	12523259
	2-E20	4.422	SHIM, FRT CTSHF EXTN BRG (.024MM)	97-02	Y (MM6)	AR	12523260
	2-E20	4.422	SHIM, FRT CTSHF EXTN BRG (.026MM)	97-02	Y (MM6)	AR	12523261
	2-E20	4.422	SHIM, FRT CTSHF EXTN BRG (.028MM)	97-02	Y (MM6)	AR	12523262
	2-E20	4.422	SHIM, FRT CTSHF EXTN BRG (.030MM)	97-02	Y (MM6)	AR	12523263
	2-E20	4.422	SHIM, FRT CTSHF EXTN BRG (.032MM)	97-02	Y (MM6)	AR	12523264
	2-E20	4.422	SHIM, FRT CTSHF EXTN BRG (.034 THK)	97-02	Y (MM6)	AR	12523265
	2-E20	4.422	SHIM, FRT CTSHF EXTN BRG (.036MM)	97-02	Y (MM6)	AR	12523266
	2-E20	4.422	SHIM, FRT CTSHF EXTN BRG (.038MM)	97-02	Y (MM6)	AR	12523267
	2-E20	4.422	SHIM, FRT CTSHF EXTN BRG (.040MM)	97-02	Y (MM6)	AR	12523268
	2-E20	4.422	SHIM, FRT CTSHF EXTN BRG (.042MM)	97-02	Y (MM6)	AR	12523269
	2-E20	4.422	SHIM, FRT CTSHF EXTN BRG (.044MM)	97-02	Y (MM6)	AR	12523270
	2-E20	4.422	SHIM, FRT CTSHF EXTN BRG (.046MM)	97-02	Y (MM6)	AR	12523271
	2-E20	4.422	SHIM, FRT CTSHF EXTN BRG (.048MM)	97-02	Y (MM6)	AR	12523272
	2-E20	4.422	SHIM, FRT CTSHF EXTN BRG (.050MM)	97-02	Y (MM6)	AR	12523273
132.	2-E15	4.349	FUNNEL, TRANS LUB	97-02	Y (MM6)	1	12523275
133.	2-E13	4.303	BOLT, SHFT GDE PLT (REV IDLER GR SHF)	97-02	Y (MM6)	2	12523243
134.	2-E24	4.435	BRACKET, REV IDLER GR SHF	97-02	Y (MM6)	1	12369470

cardiagn.com

136.	2-E24	4.430	GEAR, REV IDLER	97-02	Y (MM6)	3	12523283
137.	2-E24	4.431	BEARING, REV IDLER GR (4.355) (AC-DELCO #12523284)	97-02	Y (MM6)	1	12523284
138.	2-E24	4.433	SHAFT, REV IDLER GR	97-02	Y (MM6)	1	12369469
140.		N.S.	LEVER, TRANS 5TH & 6TH SHFT (SERVICED BY COMPONENTS 141 THRU 148)				
141.	2-E12	4.302	PIN, REV SHFT COLR (PART OF 140) (3/16 X 13/16 ROLL) (8.939)	97-02	Y (MM6)	1	454512
142.	2-E12	4.302	COLLAR, TRANS REV SHFT LVR	97-02	Y (MM6)	1	12523203
143.	2-E14	4.309	SHAFT, 5TH & 6TH & REV SHFT	97-02	Y (MM6)	1	12523202
144.	2-E12	4.302	LEVER, TRANS 5TH & 6TH SHFT	97-02	Y (MM6)	1	12523204
145.		N.S.	PAD, 5TH/6TH SHIFT RAIL LEVER (PART OF 144)				
146.		N.S.	BUSHING, 5TH/6TH SHIFT RAIL LEVER (PART OF 144)				
147.	2-E13	4.307	SEAL, REV LOCKOUT SOL (O RING)	97-02	Y (MM6)	1	12523293
148.	2-E12	4.302	LEVER, OFFSET SHFT (REV)	97-02	Y (MM6)	1	12523205
149.		N.S.	RAIL ASSY (SERVICED BY ITEMS 150 THRU 159)				
150.	2-E13	4.303	FORK, 1ST & 2ND SHFT	97-02	Y (MM6)	1	12523210
151.	2-E14	4.312	INSERT, 1ST & 2ND SHFT FORK	97-02	Y (MM6)	2	12523208
152.	2-E13	4.307	PLATE, SHFT INTLK (HELD INTO INTERLOCK PLATE)	97-02	Y (MM6)	1	12523209
153.	2-E14	4.309	SHAFT, 1ST & 2ND & 3RD & 4TH SHFT	97-02	Y (MM6)	1	12455014
154.	2-E13	4.307	PIN, 1ST & 2ND SHFT FORK (3/16 X 13/16 ROLL) (8.939)	97-02	Y (MM6)	1	454512
155.	2-E12	4.302	PIN, CONT SEL ARM	97-02	Y (MM6)	1	12523211
156.	2-E13	4.307	PLATE, SHFT INTLK (GEAR SELECT) (HOLDS INTERLOCK PLATES)	97-02	Y (MM6)	1	12523212
157.	2-E13	4.307	PLATE, SHFT INTLK (HELD INTO INTERLOCK PLATE)	97-02	Y (MM6)	1	12523209
158.	2-E13	4.303	FORK, 3RD & 4TH SHFT	97-02	Y (MM6)	1	12523207
159.	2-E14	4.312	INSERT, 3RD & 4TH SHFT FORK	97-02	Y (MM6)	2	12523208
160.	2-E13	4.307	SEAL, REV LOCKOUT (O RING)	97-02	Y (MM6)	1	12523301
161.	2-E12	4.104	PIPE, TRANS VENT	97-02	Y (MM6)	1	12455049
	2-E12	4.104	CLIP, TRANS VENT HOSE	97-02	Y (MM6)	1	12455047
169.		N.S.	RING, SNAP (PART OF 91)				
170.		N.S.	LOCKOUT, REVERSE (PART OF 91)				
171.		N.S.	SPRING, REVERSE LOCKOUT OUTER (PART OF 91)				
172.		N.S.	SEAT, REVERSE LOCKOUT (PART OF 91)				
173.		N.S.	RING, SNAP (PART OF 91)				
174.		N.S.	SPRING, REVERSE LOCKOUT INNER (PART OF 91)				
175.		N.S.	BODY, REVERSE LOCKOUT (PART OF 91)				
178.	2-E11	4.083	BOLT, TRANS ADAP (M6X13)	97-02	Y (MM6)	2	12458099
	2-E11	4.083	BOLT, TRANS ADAP (M10X1.5-40MM) (0.683)	97-02	Y (MM6)	11	12523235
179.	2-E19	4.412	SPACER, 2ND GR BRG	97-02	Y (MM6)	1	12455005
180.	2-E12	4.104	VENT, M/TRNS	97-02	Y (MM6)	1	12523294

cardiagn.com

							GM04-458
181.	2-E13	4.307	SOLENOID, SKIP SHFT (CPS) ...	97-02	Y (MM6)	1	12523292
	2-E13	4.307	SEAL, SKIP SHFT SOL (O RING)	97-02	Y (MM6)	1	12523293
182.	2-E13	4.307	PIN, 1ST & 2ND SHFT FORK (3/16 X 13/16 ROLL) (8.939)	97-02	Y (MM6)	1	454512
183.	2-E12	4.302	LEVER, SKIP SHFT LVR	97-02	Y (MM6)	1	12455033
184.	2-E14	4.309	SEAL, SHFT SHF INR	97-02	Y (MM6)	1	12455028
185.	2-E14	4.309	SEAL, SHFT SHF OTR	97-02	Y (MM6)	1	12455027
186.	2-E17	4.383	CONE, 4TH GR SYN OTR (6TH GEAR)	97-02	Y (MM6)	1	12455016
187.	2-E17	4.383	CONE, 4TH GR SYN INR (6TH GEAR)	97-02	Y (MM6)	1	12455017
188.	2-E18	4.384	WASHER, 5TH & 6TH GR SYN ..	97-02	Y (MM6)	2	12455039
189.	2-E17	4.383	CONE, 4TH GR SYN OTR	97-02	Y (MM6)	1	12455016
190.	2-E17	4.383	CONE, 4TH GR SYN INR	97-02	Y (MM6)	1	12455017
191.	2-E19	4.415	WASHER, 3RD GR THR	97-02	Y (MM6)	1	12454997
192.	2-E17	4.383	CONE, 3RD GR SYN INR	97-02	Y (MM6)	1	12454999
193.	2-E17	4.383	CONE, 3RD GR SYN OTR	97-02	Y (MM6)	1	12455001
194.	2-E18	4.384	WASHER, 5TH & 6TH GR SYN ..	97-02	Y (MM6)	2	12455039
195.	2-E17	4.383	CONE, 4TH GR SYN INR (5TH GEAR)	97-02	Y (MM6)	1	12455017
196.	2-E17	4.383	CONE, 4TH GR SYN OTR (5TH GEAR)	97-02	Y (MM6)	1	12455016
197.	2-E13	4.307	BOLT, REV LOCKOUT SOL CVR (M8X1.25)	97-02	Y (MM6)	4	12455048
198.	2-E12	4.105	PLATE, TRANS FRT SHIFTER CVR	97-02	Y (MM6)	1	12455046

SERVICE KITS

	2-E9	4.003	TRANSMISSION, MAN	97	Y (MM6)	1	12563410
	2-E9	4.003	TRANSMISSION, MAN	98-01	Y (MM6) (EXC VD1) ...	1	12563410
	2-E9	4.003	TRANSMISSION, MAN	02	Y (MM6) (EXC VD1) ...	1	12570231
	2-E9	4.003	TRANSMISSION, MAN	98-02	Y (MM6, VD1) (EXPORT)	1	12563411
1.	2-E15	4.317	BEARING, CTSHF EXTN (INCLS 11, 22)	97-02	Y (MM6)	1	12523059
2.	2-N15	5.505	CARRIER, DIFF (W/GEARS) (INCL 87, 88) (3.42 RATIO)	97-02	Y (MM6)	1	12551769

RPO DEFINITIONS
GU2 – AXLE,REAR,2.73 RATIO
GU6 – AXLE,REAR,3.42 RATIO
G90 – AXLE REAR 3.15 RATIO
LS1 – ENGINE GAS, 8 CYL, 5.7L, SFI, ALUMINUM ENGINE
MM6 – TRANSMISSION MAN 6 SPD, BORG WARNER, 85MM, 1ST 2.66, 6TH 0.50, O/D
M30 – TRANSMISSION,AUTOMATIC 4 SPEED,4L60E,ELECTRONIC
VD1 – PROVISION OPTIONS,EUROPE(EXPORT)

cardiagn.com

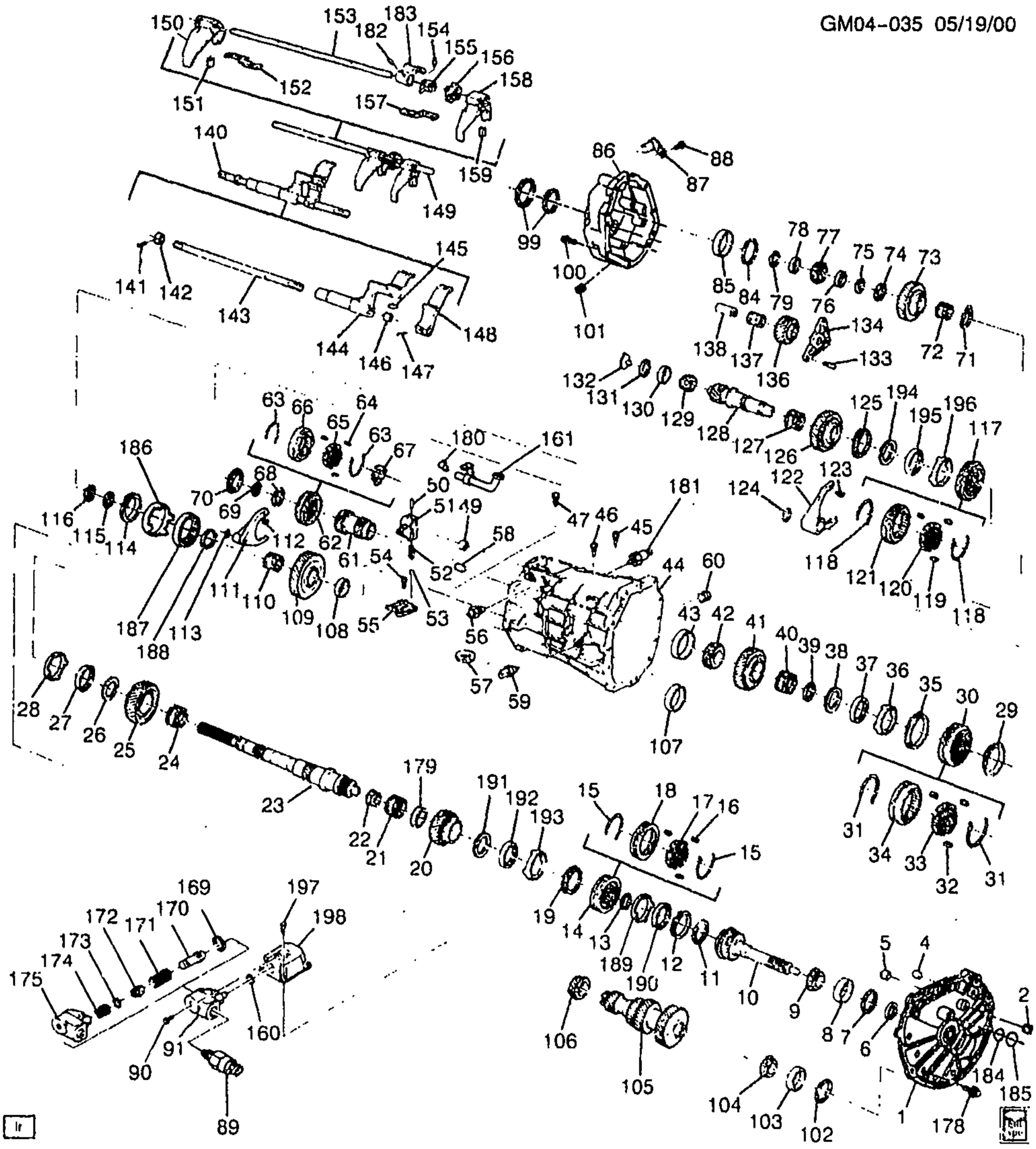

GM04-035

2001-2002 Y 6-SPEED MANUAL TRANSMISSION ASSEMBLY(M12)

1.	2-E11	4.083	PLATE, TRANS FRT ADAP	01-02	YY37 (M12)	1	12455019
	2-E13	4.303	CAM, SHFT SHF DTNT	01-02	YY37 (M12)	1	12455029
	2-E13	4.303	PIN, SHFT SHF DTNT CAM PIV ..	01-02	YY37 (M12)	1	12455030
	2-E13	4.303	SPRING, SHFT SHF DTNT CAM .	01-02	YY37 (M12)	1	12455031
	2-E13	4.303	WASHER, SHFT SHF DTNT CAM	01-02	YY37 (M12)	1	12455032

cardiagn.com

	2-E10	4.010	BOLT, M/TRNS CONT LVR HSG (CENTERING CAM SPRING) (M8X1.25X20) (4.012)	01-02	YY37 (M12)	1	15546805
2.	2-E12	4.104	PLUG, TRANS FRT ADAPT INSP (8.971)	01-02	YY37 (M12)	1	12387621
4.	2-E12	4.104	PIN, TRANS CASE LOC (DOWEL) (0.685)	01-02	YY37 (M12)	2	12523068
5.	2-E14	4.309	BUSHING, TOP SHFT RL	01-02	YY37 (M12)	2	12523001
6.	2-E15	4.354	SEAL, INPUT SHF	01-02	YY37 (M12)	1	15635337
7.	2-E16	4.376	SHIM, INPUT SHF BRG (.022MM)	01-02	YY37 (M12)	AR	12523218
	2-E16	4.376	SHIM, INPUT SHF BRG (.026MM)	01-02	YY37 (M12)	AR	12523220
	2-E16	4.376	SHIM, INPUT SHF BRG (.028MM)	01-02	YY37 (M12)	AR	12523221
	2-E16	4.376	SHIM, INPUT SHF BRG (.030MM)	01-02	YY37 (M12)	AR	12523222
	2-E16	4.376	SHIM, INPUT SHF BRG (.032MM)	01-02	YY37 (M12)	AR	12523223
	2-E16	4.376	SHIM, INPUT SHF BRG (.034MM)	01-02	YY37 (M12)	AR	12523224
	2-E16	4.376	SHIM, INPUT SHF BRG (.036MM)	01-02	YY37 (M12)	AR	12523225
	2-E16	4.376	SHIM, INPUT SHF BRG (.038MM)	01-02	YY37 (M12)	AR	12523226
	2-E16	4.376	SHIM, INPUT SHF BRG (.040MM)	01-02	YY37 (M12)	AR	12523227
	2-E16	4.376	SHIM, INPUT SHF BRG (.042MM)	01-02	YY37 (M12)	AR	12523228
	2-E16	4.376	SHIM, INPUT SHF BRG (.044MM)	01-02	YY37 (M12)	AR	12523229
	2-E16	4.376	SHIM, INPUT SHF BRG (.046MM)	01-02	YY37 (M12)	AR	12523230
	2-E16	4.376	SHIM, INPUT SHF BRG (.048MM)	01-02	YY37 (M12)	AR	12523231
	2-E16	4.376	SHIM, INPUT SHF BRG (.050MM)	01-02	YY37 (M12)	AR	12523232
	2-E16	4.376	SHIM, INPUT SHF BRG (.041 THK) (AC-DELCO #14069884)	01-02	YY37 (M12)	AR	14069884
	2-E16	4.376	SHIM, INPUT SHF BRG (.042 THK) (AC-DELCO #14069885)	01-02	YY37 (M12)	AR	14069885
	2-E16	4.376	SHIM, INPUT SHF BRG (.043 THK) (MAIN DR) (AC-DELCO #14069886)	01-02	YY37 (M12)	AR	14069886
	2-E16	4.376	SHIM, INPUT SHF BRG (.044 THK) (MAIN DR) (AC-DELCO #14069887)	01-02	YY37 (M12)	AR	14069887
8.		N.S.	RACE, INPUT SHAFT BEARING (PART OF 9)				
9.	2-N13	4.355	BEARING, MAIN DRV GR (INCL 8)	01-02	YY37 (M12)	1	88894051
10.	2-E19	4.403	SHAFT, MAIN (INPUT)	01-02	YY37 (M12)	1	88894050
11.		N.S.	RACE, INPUT SHAFT BEARING (*KIT1)				
12.	2-E17	4.383	RING, 4TH GR BLOCKING	01-02	YY37 (M12)	1	12455018
13.	2-E18	4.384	WASHER, 3RD & 4TH GR SYN HUB THR	01-02	YY37 (M12)	1	12455003
14.	2-E17	4.380	SYNCHRONIZER, 3RD & 4TH GR (INCL 15 THRU 18)	01-02	YY37 (M12)	1	12455002
15.	2-E18	4.384	SPRING, SYN (3RD/4TH) (PART OF 14)	01-02	YY37 (M12)	2	12523185
16.	2-E20	4.416	KEY, 3RD & 4TH GR (PART OF 14) (WINGED FLANGES ON SIDES OF KEY) (4.384)	01-02	YY (M12)	3	14083521
17.		N.S.	HUB, 3RD & 4TH GR SYN (PART OF 14)				
18.		N.S.	SLEEVE, 3RD/4TH SYC (PART OF 14)				
19.	2-E17	4.383	RING, 3RD GR BLOCKING (4.416)	01-02	YY37 (M12)	1	12455000
20.	2-E19	4.415	GEAR, 3RD	01-02	YY37 (M12)	1	88894087

cardiagn.com

21.	2–E15	4.355	BEARING, 3RD GR	01–02	YY37 (M12)	1	12523073
22.		N.S.	BEARING, MAINSHAFT SMALL TAPERED (*KIT1)				
23.	2–E19	4.403	SHAFT, MAIN (OUTPUT)	01–02	YY37 (M12)	1	12454986
24.		4.355	BEARING, 2ND GR	01–02			
25.	2–E18	4.395	GEAR, 2ND	01–02	YY37 (M12)	1	88894088
26.	2–E19	4.412	SPACER, 2ND GR BRG	01–02	YY37 (M12)	1	12455005
27.	2–E17	4.383	CONE, 2ND GR SYN INR (W/18 INNER GROOVES)	01–02	YY37 (M12)	1	12455010
28.	2–E17	4.383	CONE, 2ND GR SYN OTR (W/12 INNER GROOVES)	01–02	YY37 (M12)	1	12455011
29.		4.383	RING, 2ND GR BLOCKING	01–02			
30.	2–E17	4.380	SYNCHRONIZER, 1ST & 2ND GR (INCL 31 THRU 34)	01–02	YY37 (M12)	1	12455006
31.	2–E18	4.384	SPRING, SYN (PART OF 30)	01–02	YY37 (M12)	2	12455008
32.	2–E18	4.384	INSERT, 1ST & 2ND GR SYN (PART OF 30)	01–02	YY37 (M12)	1	12455007
33.		N.S.	HUB, 1ST & 2ND GR SYN (PART OF 30)				
34.		N.S.	SLEEVE, 1ST & 2ND GR SYN (PART OF 30)				
35.	2–E17	4.383	RING, 1ST GR BLOCKING	01–02	YY37 (M12)	1	12455009
36.	2–E17	4.383	CONE, 1ST GR SYN OTR (W/12 INNER GROOVES)	01–02	YY37 (M12)	1	12455011
37.	2–E17	4.383	CONE, 1ST GR SYN INR (W/18 INNER GROOVES)	01–02	YY37 (M12)	1	12455010
38.	2–E18	4.384	RING, TRANS SYN RET (1ST & 2ND GEAR) (4.318)	01–02	YY37 (M12)	1	12523187
39.	2–E20	4.419	SPACER, 1ST GR BRG RLR	01–02	YY37 (M12)	1	12455012
40.	2–E15	4.355	BEARING, 1ST GR (4.383)	01–02	YY37 (M12)	1	12523188
41.	2–E20	4.417	GEAR, 1ST	01–02	YY37 (M12)	1	88894089
42.	2–E19	4.408	BEARING, MAIN SHF RR (INCL 43) (W/TAPPERED ROLLERS)	01–02	YY37 (M12)	1	12523286
43.		N.S.	RACE, MAINSHAFT BEARING (PART OF 42)				
44.	2–E12	4.103	CASE, TRANS (INCL 57)	01–02	YY37 (M12)	1	12523067
45.	2–E14	4.309	BOLT, REV SHFT SHF GDE	01–02	YY37 (M12)	2	12523213
46.	2–E14	4.309	BOLT, REV SHFT SHF GDE	01–02	YY37 (M12)	2	12523213
47.	2–E10	4.010	BOLT, M/TRNS CONT LVR HSG (M8X1.25X20) (4.012)	01–02	YY37 (M12)	1	15546805
48.	2–E12	4.105	PLATE, TRANS FRT SHIFTER CVR	01–02	YY37 (M12)	1	12455046
49.	2–E14	4.309	BUSHING, TOP SHFT RL	01–02	YY37 (M12)	2	12523001
50.	2–E13	4.307	PIN, 1ST & 2ND SHFT FORK (3/16 X 13/16 ROLL) (8.939)	01–02	YY37 (M12)	1	454512
51.	2–E12	4.302	LEVER, SKIP SHFT LVR	01–02	YY37 (M12)	1	12455033
52.	2–E14	4.311	SPRING, SHFT DTNT BALL	01–02	YY37 (M12)	1	12523242
53.		8.899	BALL, 3/8 STEEL (AC–DELCO #7826284)	01–02		AR	7826284
54.	2–E13	4.303	BOLT, SHFT GDE PLT	01–02	YY37 (M12)	2	12523243
55.	2–E14	4.311	PLATE, SHFT GDE DTNT	01–02	YY37 (M12)	1	12523236
56.	2–E14	4.311	DETENT, SHFT INTLK (4.302)	01–02	YY37 (M12)	1	12455056
57.	2–E12	4.105	MAGNET, TRANS (PART OF 44) (AC- DELCO #12386078)	01–02	YY37 (M12)	2	12386078
58.	2–E12	4.104	PIN, TRANS CASE LOC (DOWEL) (0.685)	01–02	YY37 (M12)	2	12523068
59.	2–B27	2.698	SWITCH, B/U LP (M16X1.5 THD)	01–02	YY37 (M12)	1	14069600

cardiagn.com

	2-B27	2.698	SWITCH, B/U LP (M16X1.5 THD)	02	YY37 (LS6, M12)	1	14069600
60.	2-E12	4.104	PLUG, TRANS OIL FIL (8.971)	01-02	YY37 (M12)	1	12387621
61.	2-E19	4.415	GEAR, 5TH	01-02	YY37 (M12)	1	12523042
62.	2-E17	4.380	SYNCHRONIZER, REV GR (INCL 63 THRU 67)	01-02	YY37 (M12)	1	12523043
63.	2-E18	4.384	SPRING, SYN (5-6 & REVERSE)	01-02	YY37 (M12)	2	12523251
64.	2-E18	4.384	KEY, 5TH & 6TH & REV SYN (WINGED FLANGES ON SIDES OF KEY)	01-02	YY37 (M12)	3	14083521
65.		N.S.	HUB, REV SYN (PART OF 62)				
66.		N.S.	SLEEVE, REV SYN (PART OF 62)				
67.	2-E18	4.384	RETAINER, REV GR SYN INSERT (PART OF 62)	01-02	YY37 (M12)	1	12523044
68.	2-E20	4.419	WASHER, REV GR THR (PEEK)	01-02	YY37 (M12)	1	12523047
69.	2-E18	4.384	RING, TRANS SYN RET (REVERSE) (4.318)	01-02	YY37 (M12)	1	12523253
70.	2-E17	4.383	RING, REV GR BLOCKING (4.384)	01-02	YY37 (M12)	1	12523049
71.	2-E20	4.419	WASHER, REV GR (LOCATED BETWEEN REV GR & SYNCHRO ASM)	01-02	YY37 (M12)	1	12523048
72.	2-E24	4.431	BEARING, REV GR	01-02	YY37 (M12)	1	12523050
73.	2-E20	4.417	GEAR, REV (TRANS MAIN SHF)	01-02	YY37 (M12)	1	12523052
74.	2-E20	4.419	WASHER, REV GR THR (LOCATED BETWEEN REV GR & REAR MAINSHAFT)	01-02	YY37 (M12)	1	12523053
75.	2-E18	4.384	RING, TRANS SYN RET (5-6 SYN HUB) (4.318)	01-02	YY37 (M12)	1	12523253
76.	2-E24	4.426	SPACER, 5TH & 6TH CNTR GR (4.416)	01-02	YY37 (M12)	1	12455040
77.	2-E19	4.408	BEARING, MAIN SHF RR (INCL 85) (W/STRAIGHT ROLLERS)	01-02	YY37 (M12)	1	12523057
78.	2-E24	4.426	SPACER, 5TH & 6TH CNTR GR (4.416)	01-02	YY37 (M12)	1	12455040
79.	2-E19	4.412	RING, MAIN SHF RR BRG RET	01-02	YY37 (M12)	1	12523058
84.	2-E19	4.412	RING, MAIN SHF RR BRG RET	01-02	YY37 (M12)	1	12523058
85.		N.S.	RACE, MAINSHAFT BEARING (PART OF 77)				
86.	2-E15	4.317	EXTENSION, TRANS	01-02	YY37 (M12)	1	12455042
87.	2-N13	4.328	SENSOR, VEH SPD (AC-DELCO #213-344)	01	Y	1	12369458
	2-N13	4.329	SENSOR, VEH SPD (AC-DELCO #213-344)	02	YY37 (LS6, M12, GU6)	1	12369458
88.	2-N13	4.329	BOLT, VEH SPD SEN (AC-DELCO #12369459)	01	Y	1	12369459
	2-N13	4.329	BOLT, VEH SPD SEN (AC-DELCO #12369459)	02	YY (LS6, M12, GU6)	1	12369459
	2-N13	4.329	BOLT, VEH SPD SEN (AC-DELCO #12369459)	02	YY37 (LS6, M12, GU6)	7	12369459
89.	2-E13	4.307	SOLENOID, REV LOCKOUT	01-02	YY37 (M12)	1	12523300
	2-E13	4.307	SEAL, REV LOCKOUT SOL (O RING)	01-02	YY37 (M12)	1	12523203
90.	2-E13	4.307	BOLT, REV LOCKOUT MTG	01-02	YY37 (M12)	1	12523302
91.	2-E13	4.307	LOCKOUT, REV (INCL 169 THRU 175)	01-02	YY37 (M12)	1	12523299
99.	2-E19	4.399	SEAL, MAIN SHF INR	01	YY37 (M12)	1	12455044
	2-E19	4.399	SEAL, MAIN SHF OTR	01	YY37 (M12)	1	12455045

cardiagn.com

100.	2-E15	4.317	STUD, TRANS EXTN	01	YY37 (M12)	1	12455043
101.	2-E12	4.104	PLUG, TRANS FRT ADAPT INSP (OIL DRAIN) (8.971)	01-02	YY37 (M12)	1	12387621
102.	2-E20	4.422	SHIM, CNTR GR BRG (.014 THK) (4.376)	01-02	YY37 (M12)	AR	14050780
	2-E20	4.422	SHIM, CNTR GR BRG (.016 THK) (4.376)	01-02	YY37 (M12)	AR	14050781
	2-E20	4.422	SHIM, CNTR GR BRG (.018 THK) (4.376)	01-02	YY37 (M12)	AR	14050782
	2-E20	4.422	SHIM, CNTR GR BRG (.012 THK) (4.376)	01-02	YY37 (M12)	AR	14050783
	2-E20	4.422	SHIM, CNTR GR BRG (.020 THK) (4.376)	01-02	YY37 (M12)	AR	14050784
	2-E20	4.422	SHIM, CNTR GR BRG (.036 THK) (4.376)	01-02	YY37 (M12)	AR	14050785
	2-E20	4.422	SHIM, CNTR GR BRG (.024 THK) (4.376) (AC-DELCO #14069868)	01-02	YY37 (M12)	AR	14069868
	2-E20	4.422	SHIM, CNTR GR BRG (.025 THK) (4.376) (AC-DELCO #14069869)	01-02	YY37 (M12)	AR	14069869
	2-E20	4.422	SHIM, CNTR GR BRG (.026 THK) (4.376) (AC-DELCO #14069870)	01-02	YY37 (M12)	AR	14069870
	2-E20	4.422	SHIM, CNTR GR BRG (.027 THK) (4.376) (AC-DELCO #14069871)	01-02	YY37 (M12)	AR	14069871
	2-E20	4.422	SHIM, CNTR GR BRG (.028 THK) (4.376) (AC-DELCO #14069872)	01-02	YY37 (M12)	AR	14069872
	2-E20	4.422	SHIM, CNTR GR BRG (.029 THK) (4.376) (AC-DELCO #14069873)	01-02	YY37 (M12)	AR	14069873
	2-E20	4.422	SHIM, CNTR GR BRG (.030 THK) (4.376) (AC-DELCO #14069874)	01-02	YY37 (M12)	AR	14069874
	2-E20	4.422	SHIM, CNTR GR BRG (.031 THK) (4.376) (AC-DELCO #14069875)	01-02	YY37 (M12)	AR	14069875
	2-E20	4.422	SHIM, CNTR GR BRG (.032 THK) (4.376) (AC-DELCO #14069876)	01-02	YY37 (M12)	AR	14069876
	2-E20	4.422	SHIM, CNTR GR BRG (.033 THK) (4.376) (AC-DELCO #14069877)	01-02	YY37 (M12)	AR	14069877
	2-E20	4.422	SHIM, CNTR GR BRG (.034 THK) (4.376) (AC-DELCO #14069878)	01-02	YY37 (M12)	AR	14069878
	2-E20	4.422	SHIM, CNTR GR BRG (.035 THK) (4.376) (AC-DELCO #14069879)	01-02	YY37 (M12)	AR	14069879
	2-E20	4.422	SHIM, CNTR GR BRG (.037 THK) (4.376) (AC-DELCO #14069880)	01-02	YY37 (M12)	AR	14069880
	2-E20	4.422	SHIM, CNTR GR BRG (.038 THK) (4.376) (AC-DELCO #14069881)	01-02	YY37 (M12)	AR	14069881
	2-E20	4.422	SHIM, CNTR GR BRG (.039 THK) (4.376) (AC-DELCO #14069882)	01-02	YY37 (M12)	AR	14069882
	2-E20	4.422	SHIM, CNTR GR BRG (.040 THK) (4.376) (AC-DELCO #14069883)	01-02	YY37 (M12)	AR	14069883
103.		N.S.	RACE, COUNTERSHAFT BEARING (PART OF 104)				
104.	2-E20	4.422	BEARING, CNTR GR FRT (INCL 103)	01-02	YY37 (M12)	1	88894090
105.	2-E20	4.421	GEAR KIT, CNTR (INCL 128)	01-02	YY37 (M12)	1	12455055
106.	2-E20	4.422	BEARING, CNTR GR RR (INCL 107)	01-02	YY37 (M12)	1	88894091
107.		N.S.	RACE, COUNTERSHAFT BEARING) (PART OF 106)				
108.	2-E20	4.416	SPACER, MAIN SHF GR BRG (6TH SPD)	01-02	YY37 (M12)	2	12523056

cardiagn.com

109.	2-E19	4.415	GEAR, 6TH	01-02	YY37 (M12)	1	12455041
110.	2-E20	4.422	BEARING, CNTR GR (4.355)	01-02	YY37 (M12)	1	12523255
111.	2-E13	4.303	FORK, REV SHFT (REVERSE) (INCL 112)	01-02	YY37 (M12)	1	12523288
112.	2-E14	4.312	INSERT, REV SHFT FORK (PART OF 111)	01-02	YY37 (M12)	2	12523233
113.	2-E14	4.312	RING, REV SHFT FORK RET (4.422)	01-02	YY37 (M12)	1	12523055
114.	2-E17	4.383	RING, 6TH GR BLOCKING	01	YY37 (M12)	1	12455036
115.	2-E20	4.416	SPACER, MAIN SHF GR BRG (6TH SPD) (6TH SPD)	01-02	YY37 (M12)	2	12523056
116.	2-E18	4.384	RING, TRANS SYN RET (5-6 SYN HUB) (4.318)	01-02	YY37 (M12)	1	12523253
117.	2-E17	4.380	SYNCHRONIZER, 5TH & 6TH GR (INCL 118 THRU 121)	01-02	YY37 (M12)	1	12455035
118.	2-E18	4.384	SPRING, SYN (5-6 REV) (PART OF 117)	01-02	YY37 (M12)	2	12523251
119.	2-E18	4.384	KEY, 5TH & 6TH & REV SYN (PART OF 117) (WINGED FLANGES ON SIDES OF KEY)	01-02	YY37 (M12)	3	14083521
120.		N.S.	HUB, 5TH & 6TH GR SYN (PART OF 117)				
121.		N.S.	SLEEVE, 5TH GR SYN (PART OF 117)				
122.	2-E13	4.303	FORK, 5TH & 6TH SHFT (INCL 123)	01-02	YY37 (M12)	1	12523258
123.	2-E14	4.312	INSERT, 5TH & 6TH SHFT FORK (PART OF 122)	01-02	YY37 (M12)	2	12523233
124.	2-E18	4.384	RING, 5TH GR SYN RET (.89 ID)	01-02	YY37 (M12)	1	12541299
125.	2-E17	4.383	RING, 5TH GR BLOCKING	01-02	YY37 (M12)	1	12455036
126.	2-E19	4.415	GEAR, 5TH (DRV)	01-02	YY37 (M12)	1	12455034
127.	2-E15	4.355	BEARING, 5TH GR	01-02	YY37 (M12)	1	88894093
128.		N.S.	GEAR, 5TH CNTR (PART OF 105)				
129.	2-E15	4.317	BEARING, CTSHF EXTN (INCL 130)	01-02	YY37 (M12)	1	88894092
130.		N.S.	RACE, CTSF EXT BEARING (PART OF 129)				
131.	2-E20	4.422	SHIM, FRT CTSHF EXTN BRG (.022MM)	01-02	YY37 (M12)	AR	12523259
	2-E20	4.422	SHIM, FRT CTSHF EXTN BRG (.024MM)	01-02	YY37 (M12)	AR	12523260
	2-E20	4.422	SHIM, FRT CTSHF EXTN BRG (.026MM)	01-02	YY37 (M12)	AR	12523261
	2-E20	4.422	SHIM, FRT CTSHF EXTN BRG (.028MM)	01-02	YY37 (M12)	AR	12523262
	2-E20	4.422	SHIM, FRT CTSHF EXTN BRG (.030MM)	01-02	YY37 (M12)	AR	12523263
	2-E20	4.422	SHIM, FRT CTSHF EXTN BRG (.032MM)	01-02	YY37 (M12)	AR	12523264
	2-E20	4.422	SHIM, FRT CTSHF EXTN BRG (.034 THK)	01-02	YY37 (M12)	AR	12523265
	2-E20	4.422	SHIM, FRT CTSHF EXTN BRG (.036MM)	01-02	YY37 (M12)	AR	12523266
	2-E20	4.422	SHIM, FRT CTSHF EXTN BRG (.038MM)	01-02	YY37 (M12)	AR	12523267
	2-E20	4.422	SHIM, FRT CTSHF EXTN BRG (.040MM)	01-02	YY37 (M12)	AR	12523268

cardiagn.com

	2-E20	4.422	SHIM, FRT CTSHF EXTN BRG (.042MM)	01-02	YY37 (M12)	AR	12523269
	2-E20	4.422	SHIM, FRT CTSHF EXTN BRG (.044MM)	01-02	YY37 (M12)	AR	12523270
	2-E20	4.422	SHIM, FRT CTSHF EXTN BRG (.046MM)	01-02	YY37 (M12)	AR	12523271
	2-E20	4.422	SHIM, FRT CTSHF EXTN BRG (.048MM)	01-02	YY37 (M12)	AH	12523272
	2-E20	4.422	SHIM, FRT CTSHF EXTN BRG (.050MM)	01-02	YY37 (M12)	AR	12523273
132.	2-E15	4.349	FUNNEL, TRANS LUB	01-02	YY37 (M12)	1	12523275
133.	2-E13	4.303	BOLT, SHFT GDE PLT (REV IDLER GR SHF)	01-02	YY37 (M12)	2	12523243
134.	2-E24	4.435	BRACKET, REV IDLER GR SHF	01-02	YY37 (M12)	1	12369470
136.	2-E24	4.430	GEAR, REV IDLER	01-02	YY37 (M12)	1	12523283
137.	2-E15	4.355	BEARING, 3RD GR	01-02	YY37 (M12)	1	12523073
138.	2-E24	4.433	SHAFT, REV IDLER GR	01-02	YY37 (M12)	1	12369469
140.	2-E12	4.302	LEVER, TRANS 5TH & 6TH SHFT	01	YY37 (M12)	1	12523204
141.	2-E12	4.302	PIN, REV SHFT COLR (PART OF 140) (3/16 X 13/16 ROLL) (8.939)	01	YY37 (M12)	1	454512
142.	2-E12	4.302	COLLAR, TRANS REV SHFT LVR	01	YY37 (M12)	1	12523203
143.	2-E14	4.309	SHAFT, 5TH & 6TH & REV SHFT	01	YY37 (M12)	1	12523202
144.	2-E12	4.302	LEVER, TRANS 5TH & 6TH SHFT (INCL 145, 146)	01	YY37 (M12)	1	12523204
145.	2-E14	4.312	INSERT, 5TH & REV SHFT FORK (PART OF 144)	01-02	YY37 (M12)	2	12523233
146.	2-E14	4.309	BUSHING, TOP SHFT RL (PART OF 144)	01-02	YY37 (M12)	2	12523001
147.	2-E13	4.307	SEAL, REV LOCKOUT SOL (O RING)	01-02	YY37 (M12)	1	12523293
148.	2-E12	4.302	LEVER, OFFSET SHFT (REV)	01	YY37 (M12)	1	12523205
149.		N.S.	RAIL ASSY (SERVICED BY ITEMS 150 THRU 159)				
150.	2-E13	4.303	FORK, 1ST & 2ND SHFT (INCL 151)	01-02	YY37 (M12)	1	12523210
151.	2-E14	4.312	INSERT, 1ST & 2ND SHFT FORK (ALSO PART OF 150)	01-02	YY37 (M12)	2	12523208
152.	2-E13	4.307	PLATE, SHFT INTLK (HELD INTO INTERLOCK PLATE)	01-02	YY37 (M12)	1	12523209
153.	2-E14	4.309	SHAFT, 1ST & 2ND & 3RD & 4TH SHFT	01-02	YY37 (M12)	1	12455014
154.	2-E13	4.307	PIN, 1ST & 2ND SHFT FORK (3/16 X 13/16 ROLL) (8.939)	01-02	YY37 (M12)	1	454512
155.	2-E12	4.302	PIN, CONT SEL ARM	01	YY37 (M12)	1	12523211
156.	2-E13	4.307	PLATE, SHFT INTLK (GEAR SELECT) (HOLDS INTERLOCK PLATES)	01-02	YY37 (M12)	1	12523212
157.	2-E13	4.307	PLATE, SHFT INTLK (HELD INTO INTERLOCK PLATE)	01-02	YY37 (M12)	1	12523209
158.	2-E13	4.303	FORK 3RD & 4TH SHFT	01-02	YY37 (M12)	1	12523207
159.	2-E14	4.312	INSERT, 3RD & 4TH SHFT FORK	01-02	YY37 (M12)	2	12523208
160.	2-E13	4.307	SEAL, REV LOCKOUT (O RING)	01-02	YY37 (M12)	1	12523301
161.	2-E12	4.104	PIPE, TRANS VENT	01-02	YY37 (M12)	1	12455049
	2-E12	4.104	CLIP, TRANS VENT HOSE	01-02	YY37 (M12)	1	12455047
169.		N.S.	RING, SNAP (PART OF 91)				
170.		N.S.	LOCKOUT, REVERSE (PART OF 91)				

cardiagn.com

171.		N.S.	SPRING, REVERSE LOCKOUT OUTER (PART OF 91)				
172.		N.S.	SEAT, REVERSE LOCKOUT (PART OF 91)				
173.		N.S.	RING, SNAP (PART OF 91)				
174.		N.S.	SPRING, REVERSE LOCKOUT INNER (PART OF 91)				
175.		N.S.	BODY, REVERSE LOCKOUT (PART OF 91)				
178.	2-E11	4.083	BOLT, TRANS ADAP (M6X13)	01-02	YY (M12)	2	12458099
	2-E11	4.083	BOLT, TRANS ADAP (M10X1.5-40MM) (0.683)	01-02	YY37 (M12)	11	12523235
179.	2-E20	4.416	SPACER, MAIN SHF GR BRG (6TH SPD) (3RD SPD)	01-02	YY37 (M12)	2	12523056
180.	2-E12	4.104	VENT, M/TRNS	01	YY37 (M12)	1	12523294
181.	2-E13	4.307	SOLENOID, SKIP SHFT (CPS)	01-02	YY37 (M12)	1	12523292
	2-E13	4.307	SEAL, SKIP SHFT SOL (O RING)	01-02	YY37 (M12)	1	12523293
182.	2-E13	4.307	PIN, 1ST & 2ND SHFT FORK (3/16 X 13/16 ROLL) (8.939)	01-02	YY37 (M12)	1	454512
183.	2-E12	4.302	LEVER, SKIP SHFT LVR	01-02	YY37 (M12)	1	12455033
184.	2-E14	4.309	SEAL, SHFT SHF INR	01-02	YY37 (M12)	1	12455028
185.	2-E14	4.309	SEAL, SHFT SHF OTR	01-02	YY37 (M12)	1	12455027
186.	2-E17	4.383	CONE, TRANS SYN (4TH, 5TH & 6TH) (6TH GEAR)	01-02	YY37 (M12)	1	88894070
187.	2-E17	4.383	CONE, 4TH GR SYN INR (6TH GEAR)	01-02	YY37 (M12)	1	12455017
188.	2-E20	4.416	SPACER, MAIN SHF GR BRG (6TH SPD) (5TH & 6TH GR SYN)	01-02	YY37 (M12)	2	12523056
189.	2-E17	4.383	CONE, TRANS SYN (4TH, 5TH & 6TH)	01-02	YY37 (M12)	1	88894070
190.	2-E17	4.383	CONE, 4TH GR SYN INR	01-02	YY37 (M12)	1	12455017
191.	2-E19	4.415	WASHER, 3RD GR THR	01-02	YY37 (M12)	1	12454997
192.	2-E17	4.383	CONE, 3RD GR SYN INR	01-02	YY37 (M12)	1	12454999
193.	2-E17	4.383	CONE, 3RD GR SYN (OUTER)	01-02	YY37 (M12)	1	88894069
194.	2-E18	4.384	WASHER, 5TH & 6TH GR SYN	01-02	YY37 (M12)	2	12455039
195.	2-E17	4.383	CONE, 4TH GR SYN INR (5TH GEAR)	01-02	YY37 (M12)	1	12455017
196.	2-E17	4.383	CONE, TRANS SYN (4TH, 5TH & 6TH) (5TH GEAR)	01-02	YY37 (M12)	1	88894070
197.	2-E13	4.307	BOLT, REV LOCKOUT SOL CVR (M8X1.25)	01-02	YY37 (M12)	4	12455048
198.	2-E12	4.105	PLATE, TRANS FRT SHIFTER CVR	01-02	YY37 (M12)	1	12455046

SERVICE KITS

	2-E9	4.003	TRANSMISSION, MAN	01-02	YY37 (LS6, M12)	1	12561852
1.	2-E15	4.317	BEARING, CTSHF EXTN (INCLS 11, 22)	01-02	YY37 (M12)	1	88894092
2.	2-N15	5.505	CARRIER, DIFF (INCL 87, 88)	01	YY37 (M12, GU6)	1	12561853
	2-N15	5.505	CARRIER, DIFF (INCL 87, 88)	02	YY37 (LS6, M12, GU6)	1	12572683

RPO DEFINITIONS
GU6 - AXLE,REAR,3.42 RATIO
LS6 - ENGINE GAS, 8 CYL, 5.7L, SFI, ALUMINUM, HIGH OUTPUT
M12 - TRANSMISSION MAN 6 SPD, TREMEC, 85MM, 1ST 2.97, 6TH 0.57, O/D

cardiagn.com

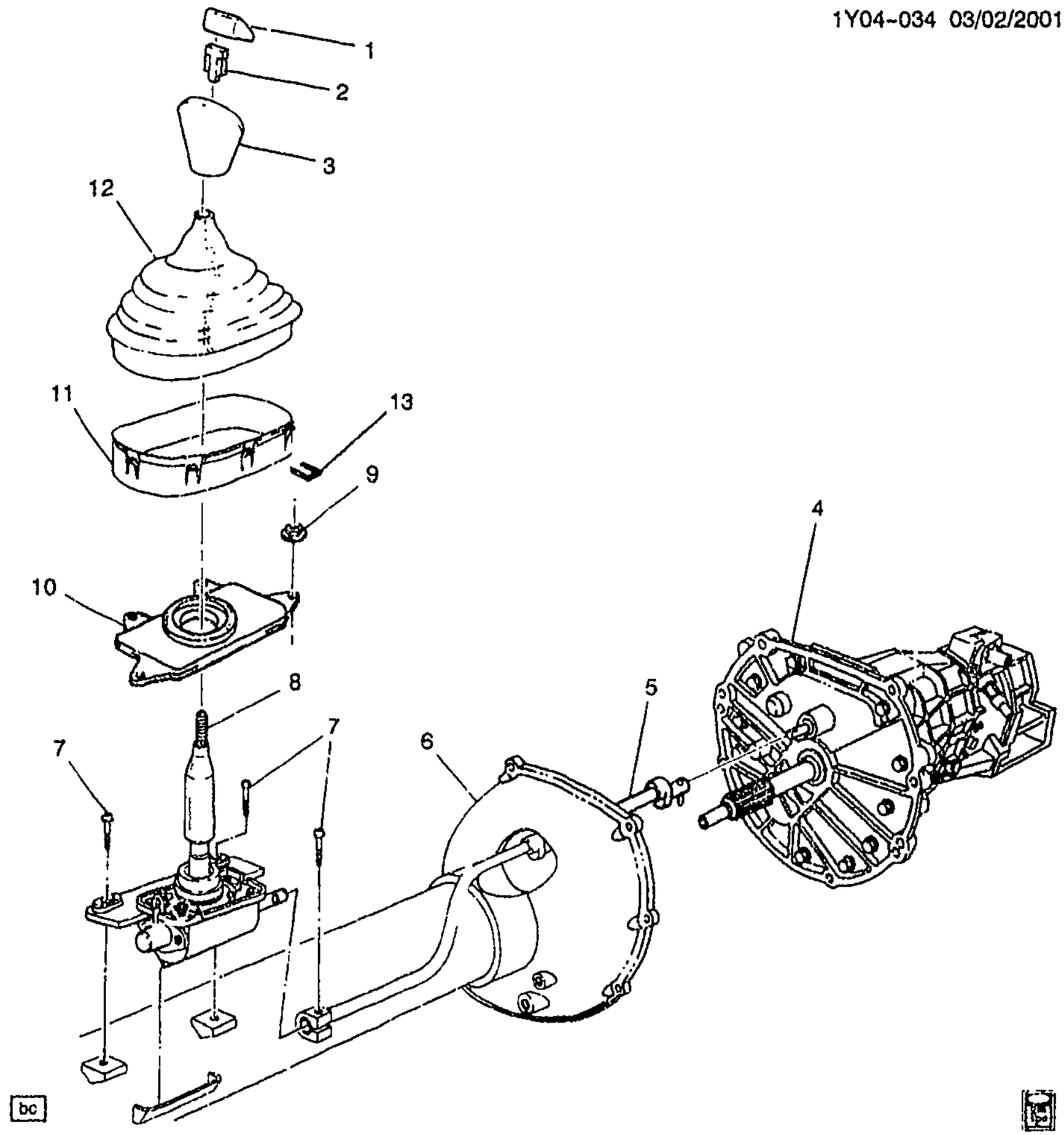

1Y04-034

1997-2000 Y SHIFT CONTROLS/MANUAL TRANSMISSION (MM6)
2001-2002 Y SHIFT CONTROLS/MANUAL TRANSMISSION (MM6,M12)

1.	2-E9	4.006	PUSHBUTTON, M/TRNS CONT LVR REL (W/SHFT PATT)	97-00	Y (MM6)	1	12551771
	2-E9	4.006	PUSHBUTTON, M/TRNS CONT LVR REL (W/SHFT PATT)	01-02	Y (MM6, M12)	1	12551771
2.	2-E9	4.006	INSERT, M/TRNS CONT LVR KNOB	97-00	Y (MM6)	1	10150014
	2-E9	4.006	INSERT, M/TRNS CONT LVR KNOB	01-02	Y (MM6, M12)	1	10150014

cardiagn.com

3.	2-E9	4.006	KNOB, M/TRNS CONT LVR (W/SHFT PATT) (NOTE:FOR SHFT PATT ORDER PUSHBUTTON 12551771)	97	Y (MM6)	1	12551768
	2-E9	4.006	KNOB, M/TRNS CONT LVR (W/SHFT PATT) (NOTE:FOR SHFT PATT ORDER PUSHBUTTON 12551771)	98	Y (MM6) (EXC Z4Z)	1	12559931
	2-E9	4.006	KNOB, M/TRNS CONT LVR (W/SHFT PATT) (NOTE:FOR SHFT PATT ORDER PUSHBUTTON 12551771)	98	Y67 (MM6, Z4Z)	1	12560119
	2-E9	4.006	KNOB, M/TRNS CONT LVR (W/SHFT PATT) (NOTE:FOR SHFT PATT ORDER PUSHBUTTON 12551771)	99-00	Y (MM6)	1	12559931
	2-E9	4.006	KNOB, M/TRNS CONT LVR (W/SHFT PATT) (NOTE:FOR SHFT PATT ORDER PUSHBUTTON 12551771)	01-02	Y (MM6, M12)	1	12559931
4.		N.S.	TRANSAXLE, MAN (3.42 RATIO) (CPS)		....		
5.	2-E10	4.035	ROD, M/TRNS SHFT LVR	97-00	Y (MM6)	1	12554740
	2-E10	4.035	ROD, M/TRNS SHFT LVR	01-02	Y (MM6, M12)	1	12554740
6.	2-N15	5.546	SUPPORT, DRIVELINE (COMPLETE ASM) (COMPONENT PARTS SERVICED)	97-00	Y (MM6)	1	12564457
	2-N15	5.546	SUPPORT, DRIVELINE (COMPLETE ASM) (COMPONENT PARTS SERVICED)	01-02	Y (MM6, M12)	1	12564457
7.	2-E10	4.012	BOLT, M/TRNS CONT (CONT ASM TO TORQUE TUBE) (TORX, M8X1.25X27)	97-00	Y (MM6)	3	12553719
	2-E10	4.012	BOLT, M/TRNS CONT (CONT ASM TO TORQUE TUBE) (TORX, M8X1.25X27)	01-02	Y (MM6, M12)	3	12553719
8.	2-E9	4.004	CONTROL, M/TRNS (W/O SHFT PATT)	97-02	Y (MM6)	1	12560342
	2-E9	4.004	CONTROL, M/TRNS (W/O SHFT PATT)	01-02	Y37 (LS6, M12)	1	12563853
9.		8.917	NUT, HEX W/CON WA 6X1X5.5 16-OD ZP 9 (M/TRNS CONT LVR BOOT RET)	97-02	.....	4	11517293
10.	2-E10	4.015	BOOT, M/TRNS CONT LVR (SHIFTER TO BODY TUNNEL) ...	97-00	Y (MM6)	1	12555226
	2-E10	4.015	BOOT, M/TRNS CONT LVR (SHIFTER TO BODY TUNNEL) ...	01-02	Y (MM6, M12)	1	12555226
11.		N.S.	RETAINER, M/TRNS CONT LVR BOOT (PART OF 12)		.....		
12.	2-E10	4.015	BOOT, M/TRNS CONT LVR (INCLS 11, 13)	98	Y67 (MM6, Z4Z)	1	10298248
	2-E10	4.015	BOOT, M/TRNS CONT LVR (USED W/LEATHER TRIM) (INCLS 11, 13)	97	Y (MM6)	1	10433159

cardiagn.com

	2-E10	4.015	BOOT, M/TRNS CONT LVR (USED W/LEATHER TRIM) (INCLS 11, 13)	98	Y (MM6) (EXC Z4Z)	1	10433159
	2-E10	4.015	BOOT, M/TRNS CONT LVR (USED W/LEATHER TRIM) (INCLS 11, 13)	99-02	Y (MM6)	1	10433159
	2-E10	4.015	BOOT, M/TRNS CONT LVR (USED W/LEATHER TRIM) (INCLS 11, 13)	01-02	Y (M12)	1	10433159
13.	2-E10	4.015	RETAINER, M/TRNS CONT LVR BOOT (PART OF 12) (4.006)	97-00	Y (MM6)	8	10028352
	2-E10	4.015	RETAINER, M/TRNS CONT LVR BOOT (PART OF 12) (4.006)	01-02	Y07-67 (MM6)	8	10028352
	2-E10	4.015	RETAINER, M/TRNS CONT LVR BOOT (PART OF 12) (4.006)	01-02	Y37 (M12)	8	10028352

RPO DEFINITIONS
LS6 – ENGINE GAS, 8 CYL, 5.7L, SFI, ALUMINUM, HIGH OUTPUT
MM6 – TRANSMISSION MAN 6 SPD, BORG WARNER, 85MM, 1ST 2.66, 6TH 0.50, O/D
M12 – TRANSMISSION MAN 6 SPD, TREMEC, 85MM, 1ST 2.97, 6TH 0.57, O/D
Z4Z – MERCHANDISED PKG INDY PACE CAR

cardiagn.com

2.041 STARTER, Starter Motor

97–01	Y 5.7G (LS1)	10465385	1	281.34	STARTER, (REMAN) (AC–DELCO #323–1063)	2–F4,1
01	Y 5.7S (LS6)	10465385	1	281.34	STARTER, (REMAN) (AC–DELCO #323–1063)	2–F4,1
02	Y 5.7G (LS1), 5.7S (LS6)	10465547	1	285.16	STARTER, (REMAN) (AC–DELCO #323–1450)	2–F4,1

2.042 BOLT, Starter Motor

97–98	Y	12555160	1	5.59	BOLT, STRTR (INBOARD)	2–F4,2
97–98	Y	12558858	1	5.43	BOLT, STRTR (OUTBOARD) (HFH, M10X1.5X113.5, 22.5, 15 OD, 10.9)	2–F4,3
99–00	Y	12561387	1	5.43	BOLT, STRTR (OUTBOARD) (HFH, M10X1.5X113.5, 23.5 THD, 19.5 OD, 10.9, ZINC, MACH)	2–F4,3
99–00	Y 5.7G (LS1)	12561848	1	5.59	BOLT, STRTR (INBOARD) (HFH, M10X1.5X46.5, 23.5, 19 OD, 10.9, SPECIAL)	2–F4,2
01–02	Y	12561387	2	5.43	BOLT, STRTR (OUTBOARD) (HFH, M10X1.5X113.5, 23.5 THD, 19.5 OD, 10.9, ZINC, MACH)	2–F4,3
01–02	Y	12561848	1	5.59	BOLT, STRTR (INBOARD) (HFH, M10X1.5X46.5, 23.5, 19 OD, 10.9, SPECIAL)	2–F4,2

2.100 CONNECTOR, Starter Motor

97–02	Y	12110541	1	1.12	CONNECTOR, RLY–START MOT THEFT DTRNT (BLACK) (6–WAY F) (W/O LEADS) (03.900)	2–F15,13
02	YY67	12110541	1	1.12	CONNECTOR, RLY–START MOT THEFT DTRNT (BLACK) (6–WAY F) (W/O LEADS) (03.900)	2–F15,13

2.170 COIL – CONNECTOR, Ignition Coil

97–02	Y 5.7G (LS1)	12558948	8	56.35	COIL, IGN (AC–DELCO #D580)	2–F12,4
01–02	Y 5.7S (LS6)	12558948	8	56.35	COIL, IGN (AC–DELCO #D580)	2–F12,4
97–02	Y 5.7G (LS1)	12102741	8	26.79	CONNECTOR, COIL–IGN (4–WAY F) (W/LEADS, IN A ROW) (04.651) (AC–DELCO #PT368)	1–J8,266
01–02	Y 5.7S (LS6)	12102741	8	26.79	CONNECTOR, COIL–IGN (4–WAY F) (W/LEADS, IN A ROW) (04.651) (AC–DELCO #PT368)	1–J8,266

2.183 BOLT – BRACKET – STUD, Ignition Coil Mounting

99–02	Y 5.7G (LS1)	10258914	10	3.45	BOLT, IGN COIL (14.065)	1–J8,240
99	Y 5.7G (LS1)	12560038	3	3.33	BOLT, IGN COIL (MODIFIED HEAD) (POINTED/STUD–TYPE) (01.745)	1–J8,239
01	Y 5.7S (LS6)	10258914	10	3.45	BOLT, IGN COIL (14.065)	1–J8,240
01–02	Y 5.7G (LS1)	12560038	3	3.33	BOLT, IGN COIL (MODIFIED HEAD) (POINTED/STUD–TYPE) (01.745)	1–J8,239
01–02	Y 5.7S (LS6)	12560038	3	3.33	BOLT, IGN COIL (MODIFIED HEAD) (POINTED/STUD–TYPE) (01.745)	1–J8,239
99–00	Y 5.7G (LS1)	12562864	1	10.78	BRACKET, IGN COIL (AC–DELCO #12562864)	1–I16,243
01–02	Y 5.7G (LS1)	12563288	1	10.78	BRACKET, IGN COIL (AC–DELCO #12563288)	1–J8,243

© 2001 GENERAL MOTORS SERVICE PARTS OPERATIONS–CHEVROLET–15Y

cardiagn.com

2.183 BOLT – BRACKET – STUD, Ignition Coil Mounting (Con't)

01–02	Y 5.7S (LS6)	12563288	1	10.78	BRACKET, IGN COIL (AC–DELCO #12563288)	1–J8,243
97–99	Y 5.7G (LS1)	12557539	9	3.33	STUD, IGN COIL (4–RH, 5–LH) (HFH, M6X1.0X40, SPECIAL HD)	2–F12,6

2.187 KEY, Ignition and Locks

97–02	Y	2852556	1	28.71	KEY, DR LK & IGN LK (UNCODED) (RESISTOR CODE #2)	2–F15,34
97–02	Y	2852557	1	28.71	KEY, DR LK & IGN LK (UNCODED) (RESISTOR CODE #3)	2–F15,34
97–02	Y	2852558	1	28.71	KEY, DR LK & IGN LK (UNCODED) (RESISTOR CODE #4)	2–F15,34
97–02	Y	2852559	1	28.71	KEY, DR LK & IGN LK (UNCODED) (RESISTOR CODE #5)	2–F15,34
97–02	Y	2852560	1	28.71	KEY, DR LK & IGN LK (UNCODED) (RESISTOR CODE #6)	2–F15,34
97–02	Y	2852561	1	28.71	KEY, DR LK & IGN LK (UNCODED) (RESISTOR CODE #7)	2–F15,34
97–02	Y	2852562	1	28.71	KEY, DR LK & IGN LK (UNCODED) (RESISTOR CODE #8)	2–F15,34
97–02	Y	2852563	1	28.71	KEY, DR LK & IGN LK (UNCODED) (RESISTOR CODE #9)	2–F15,34
97–02	Y	2852564	1	28.71	KEY, DR LK & IGN LK (UNCODED) (RESISTOR CODE #10)	2–F15,34
97–02	Y	2852565	1	28.71	KEY, DR LK & IGN LK (UNCODED) (RESISTOR CODE #11)	2–F15,34
97–02	Y	2852566	1	28.71	KEY, DR LK & IGN LK (UNCODED) (RESISTOR CODE #12)	2–F15,34
97–02	Y	2852567	1	28.71	KEY, DR LK & IGN LK (UNCODED) (RESISTOR CODE #13)	2–F15,34
97–02	Y	2852568	1	28.71	KEY, DR LK & IGN LK (UNCODED) (RESISTOR CODE #14)	2–F15,34
97–02	Y	2852569	1	28.71	KEY, DR LK & IGN LK (UNCODED) (RESISTOR CODE #15)	2–F15,34

2.188 BOLT – CONNECTOR – CYLINDER KIT – HOUSING – NUT – RETAINER – SPRING – SWITCH – TUMBLER, Ignition Switch

97	Y	26036497	3	3.38	BOLT, IGN LK CYL CASE (M5X.8X15) (PAN HD TORX TAP) (06.760)	4–E20,1
98	Y (EXC STRG COL (NP7) (EXPORT)	26036497	3	3.38	BOLT, IGN LK CYL CASE (M5X.8X15) (PAN HD TORX TAP) (06.760)	4–E20,1
99–02	Y	26036497	3	3.38	BOLT, IGN LK CYL CASE (M5X.8X15) (PAN HD TORX TAP) (06.760)	4–E20,1
97	Y	26036496	1	3.33	BOLT, IGN SW (M4.55 TAP X15) (EXT TORX FLG HD)	
97–02	Y	12101864	1	18.16	CONNECTOR, SW–IGN & START (BLACK) (3–WAY F W/LEADS) (02.535) (AC–DELCO #PT256)	2–F15,13
97–02	Y	12162229	1	.80	CONNECTOR, SW–IGN & START (6–WAY FEMALE 280, 630. (W/O LEADS) .) (BLACK) (6–WAY F W/O LEADS)	2–F15,13

© 2001 GENERAL MOTORS SERVICE PARTS OPERATIONS–CHEVROLET–15Y

cardiagn.com

2.188 BOLT – CONNECTOR – CYLINDER KIT – HOUSING – NUT – RETAINER – SPRING – SWITCH – TUMBLER, Ignition Switch (Con't)

98–02	Y	12167156	1	42.09	CONNECTOR, SW–IGN & START (6–WAY FEMALE M/P 280, 630 (W/LEADS)) (NATURAL) (6–WAY F W/LEADS) (AC–DELCO #PT820)	2–F15,13
97–02	Y	12458190	1	92.48	CYLINDER KIT, IGN LK (UNCODED) (AC–DELCO #D1473D)	2–F15,36
97–02	Y	10404727	1	13.93	HOUSING, IGN & START SW	5–E25,35
97	Y	10237960	2	.46	NUT, IGN & START SW (M6X1.0) (10.512)	5–E25,36
98–02	Y	10410398	2	*.51	NUT, IGN & START SW (M6X1.0 ITR "D" THD) (10.512)	5–F18,36
97–02	Y	26047315	1	*.50	RETAINER, IGN LK CYL TUMB SPR	2–F15,37
97–02	Y	26050539	9	*.51	SPRING, IGN LK CYL TUMB	2–F15,32
97–02	Y	10246848	1	63.26	SWITCH, IGN & START (AC–DELCO #D1499C)	2–F15,15
97–02	Y	2852732	AR	*.50	TUMBLER, IGN LK CYL (TUMBLER #1)	2–F15,33
97–02	Y	2852733	AR	*.50	TUMBLER, IGN LK CYL (TUMBLER #2)	2–F15,33
97–02	Y	2852734	AR	*.50	TUMBLER, IGN LK CYL (TUMBLER #3)	2–F15,33
97–02	Y	2852735	AR	*.50	TUMBLER, IGN LK CYL (TUMBLER #4)	2–F15,33

2.195 CONNECTOR – LOCK – RELAY – RETAINER – SENSOR, Ignition Switch Warning, Lock, Headlamp, Theft Deterrent or Rear/Side Object

98–00	Y	12110541	1	1.12	CONNECTOR, RLY–STRG WHL THEFT DTRNT LK (BLACK) (6–WAY F) (W/O LEADS) (03.900)	2–F15,13
01–02	Y67	12110541	1	1.12	CONNECTOR, RLY–THEFT DTRNT (BLACK) (6–WAY F) (W/O LEADS) (03.900)	2–F15,13
97–02	Y	26050960	1	162.68	LOCK, STRG WHL THEFT DTRNT	4–E17,16
98–00	Y	12177233	1	23.80	RELAY, STRG WHL THEFT DTRNT LK (5–TERMINAL) (09.277) (AC–DELCO #15–8721)	2–F15,13
98–00	Y	12177233	1	23.80	RELAY, STRTR THEFT DTRNT (5–TERMINAL) (09.277) (AC–DELCO #15–8721)	2–F15,13
97–99	Y	12193601	1	23.80	RELAY, THEFT DTRNT (STARTER ENABLE) (BLACK) (5–WAY M) (USED W/CONNECTOR 15306045) (W/OUT BRKTS) (09.277) (AC–DELCO #15–8719)	2–F15,13
97–98	Y07	12129271	1	3.40	RETAINER, THEFT DTRNT RLY (01.055)	2–F15,13
99	Y	12129271	1	3.40	RETAINER, THEFT DTRNT RLY (01.055)	2–F15,13
99	Y07–67	10448904	1	28.17	SENSOR, THEFT DTRNT SHK	

2.198 BEZEL, Ignition Lock

97–02	Y	2852046	1	8.61	BEZEL, IGN LK CYL	2–F15,35

© 2001 GENERAL MOTORS SERVICE PARTS OPERATIONS–CHEVROLET–15Y

cardiagn.com

2.239 WIRE KIT, Spark or Glow Plug Ignition

97–02	Y 5.7G (LS1)	88892763	1		WIRE KIT, SPLG (AC–DELCO #748CC)	1–J8,236
01–02	Y 5.7S (LS6)	88892763	1		WIRE KIT, SPLG (AC–DELCO #748CC)	1–J8,236

2.240 WIRE, Spark Plug or Coil

97–98	Y 5.7G (LS1)	15301401	2	78.54	WIRE, IGN COIL (LH & RH BANKS) (PRIMARY)	2–F12,2
99–00	Y 5.7G (LS1)	12562863	1	78.54	WIRE, IGN COIL (AC–DELCO #12562863)	1–I16,258
01–02	Y 5.7G (LS1)	12569111	1	78.54	WIRE, IGN COIL	1–J8,258
01–02	Y 5.7S (LS6)	12569111	1	78.54	WIRE, IGN COIL	1–J8,258
97–02	Y 5.7G (LS1)	12192064	8	17.85	WIRE, SPLG (POS #1–#8) (STYLE 8DDD) (7.8" LONG) (02.239) (AC–DELCO #348S)	2–F13,4
01–02	Y 5.7S (LS6)	12192064	8	17.85	WIRE, SPLG (POS #1–#8 STYLE 8DDD 7.8" LONG) (02.239) (AC–DELCO #348S)	2–F13,4

2.251 SHIELD, Spark Plug Ignition Wire

97–02	Y 5.7G (LS1)	12132258	1	4.62	SHIELD, SPLG WIRE	

2.270 SPARK PLUG, Engine Tune–up (Spark, Glow)

97–98	Y 5.7G (LS1)	12563707	8	N.L.	SPARK PLUG, (AC–DELCO #41–974) (PLATINUM PLUG)	2–F13,1
97–98	Y 5.7G (LS1)	25162555	8	N.L.	SPARK PLUG, (41–931) (AC–DELCO #41–931) (PLATINUM PLUG)	2–F13,1
99–00	Y 5.7G (LS1)	12563707	8	N.L.	SPARK PLUG, (AC–DELCO #41–974) (PLATINUM PLUG)	2–F13,1
01–02	Y 5.7G (LS1)	12563707	8	N.L.	SPARK PLUG, (AC–DELCO #41–974) (PLATINUM PLUG)	2–F13,1
01–02	Y 5.7S (LS6)	12563707	8	N.L.	SPARK PLUG, (AC–DELCO #41–974) (PLATINUM PLUG)	2–F13,1

cardiagn.com

TUNE-UP CHARTS

		1997-1998 LS1 (5.7G)	
NAME	GROUP	GM SPO	AC DELCO
SPARKPLUG	2.270	25162555	41-931
FILTER,AIR	3.410	25042562	A917C
FILTER,FUEL	3.890	10287788	GF820
VALVE,PCV	1.745	25179136	CV948C
FILTER,OIL	1.836	25010633	PF44

		1999-2000 LS1 (5.7G)	
NAME	GROUP	GM SPO	AC DELCO
SPARKPLUG	2.270	12563707	41-974
FILTER,AIR	3.410	25042562	A917C
FILTER,FUEL	3.890	10299146	GF822
VALVE,PCV	1.745	25179136	CV948C
FILTER,OIL	1.836	25010633	PF44

		2001 LS1 (5.7G)	
NAME	GROUP	GM SPO	AC DELCO
SPARKPLUG	2.270	12563707	41-974
FILTER,AIR	3.410	25042562	A917C
FILTER,FUEL	3.890	10299146	GF822
VALVE,PCV	1.745	25179136	CV948C
FILTER,OIL	1.836	25010633	PF44

** FOR NEW STYLE TUNE-UP CHARTS SEE GROUP 2 - ILLUSTRATIONS - NORMAL MAINTAINCE REPLACEMENT PARTS **

cardiagn.com

		2001 LS6 (5.7L)	
NAME	GROUP	GM SPO	AC DELCO
SPARKPLUG	2.270	12563707	41-974
FILTER,AIR	3.410	25042562	A917C
FILTER,FUEL	3.890	10299146	GF822
VALVE,PCV	1.745	N/A	N/A
FILTER,OIL	1.836	25010633	PF44

		2002 LS1 (5.7G)	
NAME	GROUP	GM SPO	AC DELCO
SPARKPLUG	2.270	12563707	41-974
FILTER,AIR	3.410	25042562	A917C
FILTER,FUEL	3.890	10299146	GF822
VALVE,PCV	1.745	25179136	CV948C
FILTER,OIL	1.836	25010633	PF44

		2002 LS6 (5.7L)	
NAME	GROUP	GM SPO	AC DELCO
SPARKPLUG	2.270	12563707	41-974
FILTER,AIR	3.410	N/A	N/A
FILTER,FUEL	3.890	10299146	GF822
VALVE,PCV	1.745	26179136	CV948C
FILTER,OIL	1.836	25010633	PF44

N/A = NOT AVAILABLE OR NOT APPLICABLE
A = THREADED FITTINGS ON BOTH ENDS

** FOR NEW STYLE TUNE-UP CHARTS SEE GROUP 2 - ILLUSTRATIONS - NORMAL MAINTAINCE REPLACEMENT PARTS **

cardiagn.com

2.274 PULLEY KIT, Generator Drive

97–99	Y	12533437	1	67.51	PULLEY KIT, GEN (INCLS PULLEY, WASHER, NUT)	2–F5,1
00–02	Y 6–SPD M/TRANS (MM6)	12533437	1	67.51	PULLEY KIT, GEN (INCLS PULLEY, WASHER, NUT)	2–F5,1

2.275 GENERATOR, Engine Electrical

01–02	Y 4–SPD A/TRANS (M30)	10316182	1		GENERATOR	2–F5,1
97–99	Y	10246634	1	389.13	GENERATOR, (AC–DELCO #10246634)	2–F5,1
00	Y 6–SPD M/TRANS (MM6)	10246634	1	389.13	GENERATOR, (AC–DELCO #10246634)	2–F5,1
01–02	Y 6–SPD M/TRANS (MM6), MANUAL 6 SPD O/D TRANS, TREMEC (M12)	10246634	1	389.13	GENERATOR, (AC–DELCO #10246634)	2–F5,1

2.277 BOLT – BRACKET, Generator Mounting

97–02	Y	24503609	2	3.33	BOLT, GEN (10X1.5X95) (LWR) (09.173)	2–F8,7
97–98	Y	11516357	3	*3.33	BOLT, GEN BRKT (POSN #1) (M10X1.5X75, 25 THD, 22.3 OD, 9.8, 7114M) (08.900)	
97	Y	11516554	3	3.33	BOLT, GEN RR BRKT (TO KNUCKLE) (08.900)	2–F8,4
97–02	Y	12555220	1	55.81	BRACKET, GEN & P/S PUMP	2–F8,1
97	Y 5.7G (LS1)	12557330	1	16.65	BRACKET, GEN RR	2–F8,3

2.297 COVER KIT, Generator Commutator

97–99	Y	12533438	1	19.02	COVER KIT, GEN SLIP RING END FRM (INCLS COVER, NUTS (3)) (02.305)	2–F5,2
00	Y 6–SPD M/TRANS (MM6)	12533438	1	19.02	COVER KIT, GEN SLIP RING END FRM (INCLS COVER, NUTS (3)) (02.305)	2–F5,2
01–02	Y	12533438	1	19.02	COVER KIT, GEN SLIP RING END FRM (INCLS COVER, NUTS (3)) (02.305)	2–F5,2

2.305 COVER, Generator Drive End

97–00	Y	10297146	1	1.39	COVER, GEN	2–F8,9
01–02	Y 6–SPD M/TRANS (MM6), MANUAL 6 SPD O/D TRANS, TREMEC (M12)	10297146	1	1.39	COVER, GEN	2–F8,9

2.313 CONNECTOR – COVER, Generator

98–02	Y 4–SPD A/TRANS (M30), 6–SPD M/TRANS (MM6)	12085537	2	32.91	CONNECTOR, GEN (4–WAY F) (W/LEADS) (02.535) (AC–DELCO #PT147)	
97–98	Y	12146808	1	58	COVER, GEN WIRE TERM (BLACK) (TERMINAL BOOT COVER)	
01–02	Y 6–SPD M/TRANS (MM6), 4–SPD A/TRANS (M30)	12146808	1	.58	COVER, GEN WIRE TERM (BLACK) (TERMINAL BOOT COVER)	
	*EXPORT**********EXPORT**********EXPORT**********EXPORT**********EXPORT*					
99	Y 6–SPD M/TRANS (MM6), EUROPEAN PROVISIONS (VD1) (EXPORT)	12146808	1	.58	COVER, GEN WIRE TERM (BLACK) (TERMINAL BOOT COVER)	

cardiagn.com

2.330 BATTERY, Battery

01	YY V8, 5.7L ALL	19002254	1		BATTERY, (AC–DELCO #75P7YR) (ABSORBENT GLASS MAT)	

2.333 BRACKET – INSULATOR – RETAINER – SHIELD – SUPPORT – TRAY, Battery

97–02	Y	10281013	1	6.80	BRACKET, BAT H/SHLD	2–G2,20
97–00	Y	10246636	1	12.35	INSULATOR, BAT	2–G2,4
97–02	Y	20510029	1	*2.75	RETAINER, BAT H/SHLD (AT PLENUM) (POSN #2) (12.118)	2–G2,16
97–02	Y	10268286	1	8.05	SHIELD, BAT HT	2–G2,17
97–02	Y	10400530	1	18.35	SUPPORT, BAT TRAY	2–G2,27
97–02	Y	10268430	1	5.70	TRAY, BAT (W/SUPT)	2–G2,25

2.335 RETAINER, Battery Hold Down

97–02	Y	14005061	1	2.30	RETAINER, BAT HOLDN	2–G2,24

2.341 CABLE – STRAP, Battery (Negative)

97–02	Y	12157086	1	64.38	CABLE, BAT NEG (AC–DELCO #4XX33–1)	2–G2,15
97–02	Y	6286800	1	20.39	STRAP, ENG GND	

2.342 CABLE, Battery (Positive)

97–02	Y	12157085	1	64.38	CABLE, BAT POS (TO STARTER) (AC–DELCO #4SX37–1J)	2–G2,30
97–02	Y	12157091	1	42.75	CABLE, BAT POS FUSE BLK (AC–DELCO #6CX40)	2–G2,1

2.343 CLIP – COVER – NUT, Battery Cable

97–02	Y	12124798	3	3.33	CLIP, BAT CBL	2–G2,11
97–02	Y	12160209	1	.90	COVER, BAT NEG CBL TERM (BLACK VINYL) (SURROUNDS CABLE END AT BATT)	2–G2,6
97–98	Y	12176992	1	1.73	COVER, BAT POS CBL J/BLK	2–G2,67
97–02	Y	15328644	1	1.73	COVER, BAT POS CBL J/BLK (USED WITH ELEC CTR COVER 15328643)	2–G2,67
97–02	Y	12160210	1	1.22	COVER, BAT POS CBL TERM (RED VINYL) (SURROUNDS CABLE END AT BATT)	2–G2,8
97–02	Y	21021808	1	*.52	NUT, BAT POS CBL (POSN #1) (8X1.25X5.95 BRASS)	2–G2,33

2.383 BOLT – CONNECTOR – GROMMET – SENSOR, Distributor (also Knock Sensor)

97–99	Y 5.7G (LS1)	11515756	1	*.52	BOLT, CM/SHF POSN SEN (M8X1.25X20) (08.900)	
97–99	Y 5.7G (LS1)	11515756	1	*.52	BOLT, CR/SHF POSN SEN (M8X1.25X20) (08.900)	
97–99	Y 5.7G (LS1)	12102754	2	42.33	CONNECTOR, MDL–ELEK IGN CONT (7–WAY F, W/LEADS) (08.965) (AC–DELCO #PT381)	1–H10,510
97–00	Y 5.7G (LS1)	12085495	1	27.30	CONNECTOR, SEN–CM/SHF POSN (BLACK) (3–WAY F) (W/LEADS) (02.535) (AC–DELCO #PT117)	1–J17,543

cardiagn.com

2.383 BOLT – CONNECTOR – GROMMET – SENSOR, Distributor (also Knock Sensor) (Con't)

97–02	Y 5.7G (LS1)	12085495	1	27.30	CONNECTOR, SEN–CM/SHF POSN (BLACK) (3–WAY F) (W/LEADS) (02.535) (AC–DELCO #PT117)	1–J17,543
01–02	Y 5.7S (LS6)	12085495	1	27.30	CONNECTOR, SEN–CM/SHF POSN (BLACK) (3–WAY F) (W/LEADS) (02.535) (AC–DELCO #PT117)	1–J17,543
97–99	Y	12085495	1	27.30	CONNECTOR, SEN–CR/SHF POSN (BLACK) (3–WAY F) (W/LEADS) (02.535) (AC–DELCO #PT117)	1–J17,543
00–02	Y 5.7G (LS1)	12085495	1	27.30	CONNECTOR, SEN–CR/SHF POSN (BLACK) (3–WAY F) (W/LEADS) (02.535) (AC–DELCO #PT117)	1–J17,543
01–02	Y 5.7S (LS6)	12085495	1	27.30	CONNECTOR, SEN–CR/SHF POSN (BLACK) (3–WAY F) (W/LEADS) (02.535) (AC–DELCO #PT117)	1–J17,543
97–98	Y	12176800	2	1.58	CONNECTOR, SEN–KNOCK (FRONT) (1–WAY F) (W/O LEADS) (M/P 150 SLD)	1–H10,532
97	Y 5.7G (LS1)	15306070	2	12.18	CONNECTOR, SEN–KNOCK (FRT) (1–WAY F) (W/LEADS) (M/P 150 SLD) (AC–DELCO #PT1233) ..	1–H10,532
98	Y 5.7G (LS1), (2ND DES)	12126456	2	57.12	CONNECTOR, SEN–KNOCK (1–WAY M, W/LEADS, HIGH TEMP) (01.150) (USE W/SENSOR STAMPED 10456603 & CONN W/O INEX TAB, FOR 2ND DES SEE 15306070 (PT1233) (AC–DELCO #PT727)	1–J12,532
98–02	Y 5.7G (LS1)	12126456	2	57.12	CONNECTOR, SEN–KNOCK (1–WAY M, W/LEADS, HIGH TEMP) (01.150) (AC–DELCO #PT727)	1–J12,532
98	Y 5.7G (LS1), (1ST DES)	15306070	1	12.18	CONNECTOR, SEN–KNOCK (1–WAY F) (W/LEADS) (M/P 150 SLD) (USE W/SENSOR STAMPED 10456222 & W/INDEX TAB ON CONN TO SENSOR, FOR 2ND DES SEE 12126456 (PT727) (AC–DELCO #PT1233)	1–H10,532
01–02	Y 5.7S (LS6)	12126456	2	57.12	CONNECTOR, SEN–KNOCK (1–WAY M, W/LEADS, HIGH TEMP) (01.150) (AC–DELCO #PT727)	1–J12,532
97–02	Y 5.7G (LS1)	12558177	2	*2.68	GROMMET, KNOCK SEN	1–J17,530
01–02	Y 5.7S (LS6)	12558177	2	*2.68	GROMMET, KNOCK SEN	1–J17,530
97–98	Y 5.7G (LS1)	12560229	1	57.85	SENSOR, CM/SHF POSN (AC–DELCO #213–355)	1–I2,105
99–02	Y 5.7G (LS1)	12561211	1	52.68	SENSOR, CM/SHF POSN (AC–DELCO #213–363)	1–J17,543
01–02	Y 5.7S (LS6)	12561211	1	52.68	SENSOR, CM/SHF POSN (AC–DELCO #213–363)	1–J17,543
97–02	Y 5.7G (LS1)	12560228	1	52.68	SENSOR, CR/SHF POSN (AC–DELCO #213–354)	1–I2,172

cardiagn.com

2.383 BOLT – CONNECTOR – GROMMET – SENSOR, Distributor (also Knock Sensor) (Con't)

01–02	Y 5.7S (LS6)	12560228	1	52.68	SENSOR, CR/SHF POSN (AC–DELCO #213–354)	1–I2,172
97	Y 5.7G (LS1)	10456222	2	52.68	SENSOR, KNOCK (AC–DELCO #213–298)	1–H10,531
98	Y 5.7G (LS1), (1ST DES)	10456222	2	52.68	SENSOR, KNOCK (W/LOCATING TAB, 2ND DES SEE 10456603) (AC–DELCO #213–298)	1–H10,531
98–02	Y 5.7G (LS1), (2ND DES)	10456603	2	47.79	SENSOR, KNOCK (W/O LOCATING TAB, 1ST DES SEE 10456222) (AC–DELCO #213–362)	1–J17,531
01–02	Y 5.7S (LS6)	10456603	2	47.79	SENSOR, KNOCK (W/O LOCATING TAB) (AC–DELCO #213–362)	1–J17,531

2.440 BOLT – CONNECTOR – RETAINER, Chassis Electric Diagnostic

97–99	Y	20538173	2	3.45	BOLT, I/P WRG HARN DATA LINK CONN (BLACK) (4.8 HOLE) (14.685)	
97–01	Y	12110250	1	*1.73	CONNECTOR, DATA LINK (16–WAY F W/O LEADS W/MTG TABS) (AC–DELCO #PT1477)	5–F2,21
97–01	Y	15305914	1	60.96	CONNECTOR, DATA LINK (12–WAY F) (W/LEADS AND CAP) (AC–DELCO #PT1101) .	5–F2,21
02	YY67	12110250	1	*1.73	CONNECTOR, DATA LINK (16–WAY F W/O LEADS W/MTG TABS) (AC–DELCO #PT1477)	5–F2,21
02	YY67	15305914	1	60.96	CONNECTOR, DATA LINK (12–WAY FEMALE GT 150 (W/LEADS) .) (12–WAY F) (W/LEADS AND CAP) (AC–DELCO #PT1101)	5–F2,21
97–02	Y	20538173	2	3.45	RETAINER, I/P WRG HARN DATA LINK CONN (BLACK) (4.8 HOLE) (14.685)	

2.447 CONNECTOR – RELAY – RETAINER – SWITCH, Stop Lamp Switch

97–98	Y	12166226	1	44.37	CONNECTOR, SW–S/LP (2–WAY F) (W/LEADS & CAPACITOR) ..	
97–02	Y	12117350	1	23.01	CONNECTOR, SW–S/LP & TCC (4–WAY F) (W/LEADS) (09.764) (AC–DELCO #PT483)	2–K7,14
02	YY67 4–SPD A/TRANS (M30), A/C FRT AUTO/AUX CONT (CJ2), T&T WHL (N37), (EXC TAIL & S/LP (T89) (EXPORT)	12117350	1	23.01	CONNECTOR, SW–S/LP & TCC (4–WAY F) (W/LEADS) (09.764) (AC–DELCO #PT483)	2–K7,14
99	Y07–67	12088567	1	16.45	RELAY, HDLP CUTOFF (INADVERTENT POWER SHUTOFF;HEADLAMP & PARKING LAMP) (GRAY) (4–WAY) (N[illegible]) (AC–DELCO #15–8571)	
97–02	Y	3537079	1	6.16	RETAINER, S/LP & TCC & CRCONT REL SW (AC–DELCO #3537079)	2–K7,15
97–02	Y	11516210	1	21.90	SWITCH, ELEC BRK CONT BRK PED (W/ S/LP SW) (04.710) ...	2–K7,14

cardiagn.com

2.461 CONNECTOR, Capsule/Headlamp Warning

01–02	YY67	12065535	1	18.01	CONNECTOR, SEN–HDLP AUTO CONT AMB LGT (2–WAY F W/LEADS W/INDEX TAB OTR EDGE OF CAVITY B) (02.535) (AC–DELCO #PT146)	5–G16,25

2.480 HARNESS – WIRE, Chassis Wiring

97–02	Y 4–SPD A/TRANS (M30) ...	15320476	1	82.75	HARNESS, A/TRNS WRG (INCLS TCC SOL VLV) (AC–DELCO #15320476)	3–E15,66
97–98	Y	12130416	1	131.58	HARNESS, F/PMP WRG	2–I4,20
99	Y	12189531	1	131.58	HARNESS, F/PMP WRG	2–I9,20
00–02	Y	12189905	1		HARNESS, F/PMP WRG (HARN TO JMPR)	2–I14,20
00–02	Y	12189906	1		HARNESS, F/PMP WRG (HARN JMPR TO FUEL TK)	2–I14,20
97	Y FRT FOG LP (T96), (EXC SIG & MKR LP (T90) (EXPORT)	12189881	1	301.92	HARNESS, FWD LP WRG	2–F15,2
97	Y (EXC FRT FOG LP (T96) ...	12189883	1	944.44	HARNESS, FWD LP WRG	2–F15,2
98	Y FRT FOG LP (T96), (EXC FRT ABS BRAKE LOC (JAG), SIG & MKR LP (T90) (EXPORT)	12163322	1	301.92	HARNESS, FWD LP WRG	2–F15,2
98	Y (EXC FRT ABS BRAKE LOC (JAG), FRT FOG LP (T96) ..	12163324	1	301.92	HARNESS, FWD LP WRG	2–F15,2
98	Y FRT ABS BRAKE LOC (JAG), FRT FOG LP (T96), (EXC ACTIVE BRAKE CTL (JL4), SIG & MKR LP (T90) (EXPORT)	12189515	1	301.92	HARNESS, FWD LP WRG	2–F15,2
98	Y FRT ABS BRAKE LOC (JAG), (EXC ACTIVE BRAKE CTL (JL4), FRT FOG LP (T96)	12189517	1	301.92	HARNESS, FWD LP WRG	2–F15,2
98	Y FRT ABS BRAKE LOC (JAG), ACTIVE BRAKE CTL (JL4), FRT FOG LP (T96), (EXC SIG & MKR LP (T90) (EXPORT)	12189518	1	364.74	HARNESS, FWD LP WRG	2–F15,2
98	Y FRT ABS BRAKE LOC (JAG), ACTIVE BRAKE CTL (JL4), (EXC FRT FOG LP (T96)	12189520	1	666.86	HARNESS, FWD LP WRG	2–F15,2
99	Y ACTIVE BRAKE CTL (JL4), FRT FOG LP (T96), (EXC SIG & MKR LP (T90) (EXPORT) .	12189976	1	290.29	HARNESS, FWD LP WRG	2–F15,2
99	Y07–67 FRT FOG LP (T96), (EXC ACTIVE BRAKE CTL (JL4), SIG & MKR LP (T90) (EXPORT)	12189973	1	301.92	HARNESS, FWD LP WRG	2–F15,2
99	Y07–67 (EXC ACTIVE BRAKE CTL (JL4), SIG & MKR LP (T90) (EXPORT), FRT FOG LP (T96)	12189974	1	301.92	HARNESS, FWD LP WRG	2–F15,2
99	Y07–67 ACTIVE BRAKE CTL (JL4), (EXC SIG & MKR LP (T90) (EXPORT), FRT FOG LP (T96)	12189978	1	300.90	HARNESS, FWD LP WRG	2–F15,2

cardiagn.com

99	Y37 FRT FOG LP (T96), (EXC ACTIVE BRAKE CTL (JL4) ..	12189973	1	301.92	HARNESS, FWD LP WRG	2–F15,2
99	Y37 P/S (VARIABLE) (NV7), (EXC ACTIVE BRAKE CTL (JL4), FRT FOG LP (T96) ...	12189974	1	301.92	HARNESS, FWD LP WRG	2–F15,2
00	Y ACTIVE BRAKE CTL (JL4), (EXC SIG & MKR LP (T90) (EXPORT)	15329406	1	290.29	HARNESS, FWD LP WRG	2–F15,2
00	Y07–67 (EXC ACTIVE BRAKE CTL (JL4), SIG & MKR LP (T90) (EXPORT)	15329403	1	301.92	HARNESS, FWD LP WRG	2–F15,2
00	Y37 (EXC ACTIVE BRAKE CTL (JL4)	15329403	1	301.92	HARNESS, FWD LP WRG	2–F15,2
01	YY07–67 ACTIVE BRAKE CTL (JL4), (EXC SIG & MKR LP (T90) (EXPORT), (2ND DES)	10310796	1	296.53	HARNESS, FWD LP WRG (2ND DSN USED ON/AFTER VIN #15107689, (1ST DSN 10448116))	2–F15,2
01	YY07–67 ACTIVE BRAKE CTL (JL4), SIG & MKR LP (T90) (EXPORT), (2ND DES)	10310798	1	300.90	HARNESS, FWD LP WRG (2ND DSN USED ON/AFTER VIN #15107689, (1ST DSN 10448118))	2–F15,2
01	YY07–67 ACTIVE BRAKE CTL (JL4), (EXC SIG & MKR LP (T90) (EXPORT), (1ST DES)	10448116	1	296.53	HARNESS, FWD LP WRG (1ST DSN USED B/4 VIN #15107689, (2ND DSN 10310796))	2–F15,2
01	YY07–67 ACTIVE BRAKE CTL (JL4), SIG & MKR LP (T90) (EXPORT), (1ST DES)	10448118	1	300.90	HARNESS, FWD LP WRG (1ST DSN USED B/4 VIN #15107689, (2ND DSN 10310798))	2–F15,2
01–02	YY37	10310796	1	296.53	HARNESS, FWD LP WRG	2–F15,2
01	YY37	10448116	1	296.53	HARNESS, FWD LP WRG	2–F15,2
02	YY07–67 (EXC SIG & MKR LP (T90) (EXPORT)	10310796	1	296.53	HARNESS, FWD LP WRG	2–F15,2
97–99	Y (EXC SIG & MKR LP (T90) (EXPORT)	12163711	1	40.09	HARNESS, FWD LP WRG HARN EXTN	2–F15,1
00–02	Y (EXC SIG & MKR LP (T90) (EXPORT)	15329462	1	40.09	HARNESS, FWD LP WRG HARN EXTN	2–F15,1
97–02	Y	12163776	1	80.84	HARNESS, HAZARD LP & T/SIG LP FLSHR WRG	2–G17,15
97	Y 4–SPD A/TRANS (M30), A/C FRT AUTO/AUX CONT (CJ2), (EXC TAIL & S/LP (T89) (EXPORT), CANADIAN (Z49)	12189868	1	1548.75	HARNESS, I/P WRG	5–E8,12
97	Y 4–SPD A/TRANS (M30), A/C MAN CONT (C60), (EXC TAIL & S/LP (T89) (EXPORT), CANADIAN (Z49)	12189869	1	1257.59	HARNESS, I/P WRG	5–E8,12
97	Y 6–SPD M/TRANS (MM6), A/C FRT AUTO/AUX CONT (CJ2), (EXC TAIL & S/LP (T89) (EXPORT), CANADIAN (Z49)	12189870	1	1257.59	HARNESS, I/P WRG	5–E8,12
97	Y 6–SPD M/TRANS (MM6), A/C MAN CONT (C60), (EXC TAIL & S/LP (T89) (EXPORT), CANADIAN (Z49)	12189871	1	1257.59	HARNESS, I/P WRG	5–E8,12

cardiagn.com

2.480 HARNESS – WIRE, Chassis Wiring (Con't)

97	Y 4–SPD A/TRANS (M30), A/C FRT AUTO/AUX CONT (CJ2), CANADIAN (Z49), (EXC TAIL & S/LP (T89) (EXPORT), SPECIAL TAIL & S/LP (T93)	12189874	1	1257.59	HARNESS, I/P WRG	5–E8,12
97	Y 4–SPD A/TRANS (M30), A/C MAN CONT (C60), CANADIAN (Z49), (EXC TAIL & S/LP (T89) (EXPORT), SPECIAL TAIL & S/LP (T93) .	12189875	1	1257.59	HARNESS, I/P WRG	5–E8,12
97	Y 6–SPD M/TRANS (MM6), A/C FRT AUTO/AUX CONT (CJ2), CANADIAN (Z49), (EXC TAIL & S/LP (T89) (EXPORT), SPECIAL TAIL & S/LP (T93)	12189876	1	1257.59	HARNESS, I/P WRG	5–E8,12
97	Y 6–SPD M/TRANS (MM6), A/C MAN CONT (C60), CANADIAN (Z49), (EXC TAIL & S/LP (T89) (EXPORT), SPECIAL TAIL & S/LP (T93) .	12189877	1	1257.59	HARNESS, I/P WRG	5–E8,12
98	Y 6–SPD M/TRANS (MM6), A/C MAN CONT (C60), (EXC FRT ABS BRAKE LOC (JAG), TAIL & S/LP (T89) (EXPORT), CANADIAN (Z49)	12189816	1	1257.59	HARNESS, I/P WRG	5–E8,12
98	Y07 4–SPD A/TRANS (M30), A/C FRT AUTO/AUX CONT (CJ2), (EXC FRT ABS BRAKE LOC (JAG), TAIL & S/LP (T89) (EXPORT), CANADIAN (Z49)	12189813	1	1257.59	HARNESS, I/P WRG	5–E8,12
98	Y07 4–SPD A/TRANS (M30), A/C MAN CONT (C60), (EXC FRT ABS BRAKE LOC (JAG), TAIL & S/LP (T89) (EXPORT), CANADIAN (Z49)	12189814	1	1467.60	HARNESS, I/P WRG	5–E8,12
98	Y07 6–SPD M/TRANS (MM6), A/C FRT AUTO/AUX CONT (CJ2), (EXC FRT ABS BRAKE LOC (JAG), TAIL & S/LP (T89) (EXPORT), CANADIAN (Z49)	12189815	1	1595.21	HARNESS, I/P WRG	5–E8,12
98	Y07 4–SPD A/TRANS (M30), A/C FRT AUTO/AUX CONT (CJ2), CANADIAN (Z49), (EXC FRT ABS BRAKE LOC (JAG), TAIL & S/LP (T89) (EXPORT), SPECIAL TAIL & S/LP (T93)	12189819	1	1257.59	HARNESS, I/P WRG	5–E8,12
98	Y07 4–SPD A/TRANS (M30), A/C MAN CONT (C60), CANADIAN (Z49), (EXC FRT ABS BRAKE LOC (JAG), TAIL & S/LP (T89) (EXPORT), SPECIAL TAIL & S/LP (T93) .	12189820	1	1257.59	HARNESS, I/P WRG	5–E8,12

cardiagn.com

2.480 HARNESS – WIRE, Chassis Wiring (Con't)

98	Y07 6–SPD M/TRANS (MM6), A/C FRT AUTO/AUX CONT (CJ2), CANADIAN (Z49), (EXC FRT ABS BRAKE LOC (JAG), TAIL & S/LP (T89) (EXPORT), SPECIAL TAIL & S/LP (T93)	12189821	1	1257.59	HARNESS, I/P WRG	5–E8,12
98	Y07 6–SPD M/TRANS (MM6), A/C MAN CONT (C60), CANADIAN (Z49), (EXC FRT ABS BRAKE LOC (JAG), TAIL & S/LP (T89) (EXPORT), SPECIAL TAIL & S/LP (T93) .	12189822	1	1257.59	HARNESS, I/P WRG	5–E8,12
98	Y07 4–SPD A/TRANS (M30), A/C FRT AUTO/AUX CONT (CJ2), ACTIVE BRAKE CTL (JL4), FRT ABS BRAKE LOC (JAG), (EXC TAIL & S/LP (T89) (EXPORT), CANADIAN (Z49)	12190400	1	1233.23	HARNESS, I/P WRG (MUST BE USED W/BODY CONT MDL LABELED 9359821 FOR 1998) .	5–E8,12
98	Y07 4–SPD A/TRANS (M30), A/C MAN CONT (C60), ACTIVE BRAKE CTL (JL4), FRT ABS BRAKE LOC (JAG), (EXC TAIL & S/LP (T89) (EXPORT), CANADIAN (Z49)	12190401	1	1233.23	HARNESS, I/P WRG (MUST BE USED W/BODY CONT MDL LABELED 9359821 FOR 1998) .	5–E8,12
98	Y07 6–SPD M/TRANS (MM6), A/C FRT AUTO/AUX CONT (CJ2), ACTIVE BRAKE CTL (JL4), FRT ABS BRAKE LOC (JAG), (EXC TAIL & S/LP (T89) (EXPORT), CANADIAN (Z49)	12190402	1	1233.23	HARNESS, I/P WRG (MUST BE USED W/BODY CONT MDL LABELED 9359821 FOR 1998) .	5–E8,12
98	Y07 6–SPD M/TRANS (MM6), A/C MAN CONT (C60), ACTIVE BRAKE CTL (JL4), FRT ABS BRAKE LOC (JAG), (EXC TAIL & S/LP (T89) (EXPORT), CANADIAN (Z49)	12190403	1	1233.23	HARNESS, I/P WRG (MUST BE USED W/BODY CONT MDL LABELED 9359821 FOR 1998) .	5–E8,12
98	Y07 4–SPD A/TRANS (M30), A/C FRT AUTO/AUX CONT (CJ2), FRT ABS BRAKE LOC (JAG), ACTIVE BRAKE CTL (JL4), CANADIAN (Z49), (EXC TAIL & S/LP (T89) (EXPORT), SPECIAL TAIL & S/LP (T93)	12190406	1	1233.23	HARNESS, I/P WRG (MUST BE USED W/BODY CONT MDL LABELED 9359821 FOR 1998) .	5–E8,12
98	Y07 4–SPD A/TRANS (M30), A/C MAN CONT (C60), FRT ABS BRAKE LOC (JAG), ACTIVE BRAKE CTL (JL4), CANADIAN (Z49), (EXC TAIL & S/LP (T89) (EXPORT), SPECIAL TAIL & S/LP (T93) .	12190407	1	1233.23	HARNESS, I/P WRG (MUST BE USED W/BODY CONT MDL LABELED 9359821 FOR 1998) .	5–E8,12
98	Y07 6–SPD M/TRANS (MM6), A/C FRT AUTO/AUX CONT (CJ2), FRT ABS BRAKE LOC (JAG), ACTIVE BRAKE CTL (JL4), CANADIAN (Z49), (EXC TAIL & S/LP (T89) (EXPORT), SPECIAL TAIL & S/LP (T93)	12190408	1	1233.23	HARNESS, I/P WRG (MUST BE USED W/BODY CONT MDL LABELED 9359821 FOR 1998) .	5–E8,12

cardiagn.com

2.480 HARNESS – WIRE, Chassis Wiring (Con't)

98	Y07 6–SPD M/TRANS (MM6), A/C MAN CONT (C60), FRT ABS BRAKE LOC (JAG), ACTIVE BRAKE CTL (JL4), CANADIAN (Z49), (EXC TAIL & S/LP (T89) (EXPORT), SPECIAL TAIL & S/LP (T93) .	12190409	1	1233.23	HARNESS, I/P WRG (MUST BE USED W/BODY CONT MDL LABELED 9359821 FOR 1998) .	5–E8,12
98	Y07 4–SPD A/TRANS (M30), A/C FRT AUTO/AUX CONT (CJ2), FRT ABS BRAKE LOC (JAG), (EXC ACTIVE BRAKE CTL (JL4), TAIL & S/LP (T89) (EXPORT), CANADIAN (Z49)	12190412	1	1233.23	HARNESS, I/P WRG (MUST BE USED W/BODY CONT MDL LABELED 9359821 FOR 1998) .	5–E8,12
98	Y07 4–SPD A/TRANS (M30), A/C MAN CONT (C60), FRT ABS BRAKE LOC (JAG), (EXC ACTIVE BRAKE CTL (JL4), TAIL & S/LP (T89) (EXPORT), CANADIAN (Z49)	12190413	1	1233.23	HARNESS, I/P WRG (MUST BE USED W/BODY CONT MDL LABELED 9359821 FOR 1998) .	5–E8,12
98	Y07 6–SPD M/TRANS (MM6), A/C FRT AUTO/AUX CONT (CJ2), FRT ABS BRAKE LOC (JAG), (EXC ACTIVE BRAKE CTL (JL4), TAIL & S/LP (T89) (EXPORT), CANADIAN (Z49)	12190414	1	1233.23	HARNESS, I/P WRG (MUST BE USED W/BODY CONT MDL LABELED 9359821 FOR 1998) .	5–E8,12
98	Y07 6–SPD M/TRANS (MM6), A/C MAN CONT (C60), FRT ABS BRAKE LOC (JAG), (EXC ACTIVE BRAKE CTL (JL4), TAIL & S/LP (T89) (EXPORT), CANADIAN (Z49)	12190415	1	1233.23	HARNESS, I/P WRG (MUST BE USED W/BODY CONT MDL LABELED 9359821 FOR 1998) .	5–E8,12
98	Y07 4–SPD A/TRANS (M30), A/C FRT AUTO/AUX CONT (CJ2), FRT ABS BRAKE LOC (JAG), CANADIAN (Z49), (EXC ACTIVE BRAKE CTL (JL4), TAIL & S/LP (T89) (EXPORT), SPECIAL TAIL & S/LP (T93)	12190418	1	1233.23	HARNESS, I/P WRG (MUST BE USED W/BODY CONT MDL LABELED 9359821 FOR 1998) .	5–E8,12
98	Y07 4–SPD A/TRANS (M30), A/C MAN CONT (C60), FRT ABS BRAKE LOC (JAG), CANADIAN (Z49), (EXC ACTIVE BRAKE CTL (JL4), TAIL & S/LP (T89) (EXPORT), SPECIAL TAIL & S/LP (T93) .	12190419	1	1233.23	HARNESS, I/P WRG (MUST BE USED W/BODY CONT MDL LABELED 9359821 FOR 1998) .	5–E8,12
98	Y07 6–SPD M/TRANS (MM6), A/C FRT AUTO/AUX CONT (CJ2), FRT ABS BRAKE LOC (JAG), CANADIAN (Z49), (EXC ACTIVE BRAKE CTL (JL4), TAIL & S/LP (T89) (EXPORT), SPECIAL TAIL & S/LP (T93)	12190420	1	1233.23	HARNESS, I/P WRG (MUST BE USED W/BODY CONT MDL LABELED 9359821 FOR 1998) .	5–E8,12
98	Y07 6–SPD M/TRANS (MM6), A/C MAN CONT (C60), FRT ABS BRAKE LOC (JAG), CANADIAN (Z49), (EXC ACTIVE BRAKE CTL (JL4), TAIL & S/LP (T89) (EXPORT), SPECIAL TAIL & S/LP (T93) .	12190421	1	1233.23	HARNESS, I/P WRG (MUST BE USED W/BODY CONT MDL LABELED 9359821 FOR 1998) .	5–E8,12

cardiagn.com

2.480 HARNESS – WIRE, Chassis Wiring (Con't)

98	Y67 4–SPD A/TRANS (M30), A/C FRT AUTO/AUX CONT (CJ2), (EXC FRT ABS BRAKE LOC (JAG), TAIL & S/LP (T89) (EXPORT), CANADIAN (Z49)	12189801	1	1257.59	HARNESS, I/P WRG	5–E8,12
98	Y67 6–SPD M/TRANS (MM5), A/C FRT AUTO/AUX CONT (CJ2), (EXC FRT ABS BRAKE LOC (JAG), TAIL & S/LP (T89) (EXPORT), CANADIAN (Z49)	12189802	1	1257.59	HARNESS, I/P WRG	5–E8,12
98	Y67 4–SPD A/TRANS (M30), A/C MAN CONT (C60), (EXC FRT ABS BRAKE LOC (JAG), TAIL & S/LP (T89) (EXPORT), CANADIAN (Z49)	12189803	1	1257.59	HARNESS, I/P WRG	5–E8,12
98	Y67 6–SPD M/TRANS (MM6), A/C MAN CONT (C60), (EXC FRT ABS BRAKE LOC (JAG), TAIL & S/LP (T89) (EXPORT), CANADIAN (Z49)	12189804	1	1257.59	HARNESS, I/P WRG	5–E8,12
98	Y67 4–SPD A/TRANS (M30), A/C FRT AUTO/AUX CONT (CJ2), CANADIAN (Z49), (EXC FRT ABS BRAKE LOC (JAG), TAIL & S/LP (T89) (EXPORT), SPECIAL TAIL & S/LP (T93)	12189805	1	1257.59	HARNESS, I/P WRG	5–E8,12
98	Y67 4–SPD A/TRANS (M30), A/C MAN CONT (C60), CANADIAN (Z49), (EXC FRT ABS BRAKE LOC (JAG), TAIL & S/LP (T89) (EXPORT), SPECIAL TAIL & S/LP (T93) .	12189806	1	1257.59	HARNESS, I/P WRG	5–E8,12
98	Y67 6–SPD M/TRANS (MM6), A/C FRT AUTO/AUX CONT (CJ2), CANADIAN (Z49), (EXC FRT ABS BRAKE LOC (JAG), TAIL & S/LP (T89) (EXPORT), SPECIAL TAIL & S/LP (T93)	12189807	1	1257.59	HARNESS, I/P WRG	5–E8,12
98	Y67 6–SPD M/TRANS (MM6), A/C MAN CONT (C60), CANADIAN (Z49), (EXC FRT ABS BRAKE LOC (JAG), TAIL & S/LP (T89) (EXPORT), SPECIAL TAIL & S/LP (T93) .	12189808	1	1257.59	HARNESS, I/P WRG	5–E8,12
98	Y67 4–SPD A/TRANS (M30), A/C FRT AUTO/AUX CONT (CJ2), FRT ABS BRAKE LOC (JAG), (EXC TAIL & S/LP (T89) (EXPORT), CANADIAN (Z49)	12189980	1	1233.23	HARNESS, I/P WRG (MUST BE USED W/BODY CONT MDL LABELED 9359821 FOR 1998) .	5–E8,12
98	Y67 6–SPD M/TRANS (MM6), A/C FRT AUTO/AUX CONT (CJ2), FRT ABS BRAKE LOC (JAG), (EXC TAIL & S/LP (T89) (EXPORT), CANADIAN (Z49)	12189981	1	1233.23	HARNESS, I/P WRG (MUST BE USED W/BODY CONT MDL LABELED 9359821 FOR 1998) .	5–E8,12

cardiagn.com

2.400 HARNESS – WIRE, Chassis Wiring (Con't)

98	Y67 4–SPD A/TRANS (M30), A/C MAN CONT (C60), FRT ABS BRAKE LOC (JAG), (EXC TAIL & S/LP (T89) (EXPORT), CANADIAN (Z49)	12189982	1	1233.23	HARNESS, I/P WRG (MUST BE USED W/BODY CONT MDL LABELED 9359821 FOR 1998) .	5–E8,12
98	Y67 6–SPD M/TRANS (MM6), A/C MAN CONT (C60), FRT ABS BRAKE LOC (JAG), (EXC TAIL & S/LP (T89) (EXPORT,, CANADIAN (Z49)	12189983	1	1233.23	HARNESS, I/P WRG (MUST BE USED W/BODY CONT MDL LABELED 9359821 FOR 1998) .	5–E8,12
98	Y67 4–SPD A/TRANS (M30), A/C FRT AUTO/AUX CONT (CJ2), CANADIAN (Z49), FRT ABS BRAKE LOC (JAG), (EXC TAIL & S/LP (T89) (EXPORT)	12189984	1	1233.23	HARNESS, I/P WRG (MUST BE USED W/BODY CONT MDL LABELED 9359821 FOR 1998) .	5–E8,12
98	Y67 4–SPD A/TRANS (M30), A/C MAN CONT (C60), CANADIAN (Z49), FRT ABS BRAKE LOC (JAG), (EXC TAIL & S/LP (T89) (EXPORT)	12189985	1	1233.23	HARNESS, I/P WRG (MUST BE USED W/BODY CONT MDL LABELED 9359821 FOR 1998) .	5–E8,12
98	Y67 6–SPD M/TRANS (MM6), A/C FRT AUTO/AUX CONT (CJ2), FRT ABS BRAKE LOC (JAG), CANADIAN (Z49), (EXC TAIL & S/LP (T89) (EXPORT)	12189986	1	1233.23	HARNESS, I/P WRG (MUST BE USED W/BODY CONT MDL LABELED 9359821 FOR 1998) .	5–E8,12
98	Y67 6–SPD M/TRANS (MM6), A/C MAN CONT (C60), CANADIAN (Z49), FRT ABS BRAKE LOC (JAG), (EXC TAIL & S/LP (T89) (EXPORT)	12189987	1	1233.23	HARNESS, I/P WRG (MUST BE USED W/BODY CONT MDL LABELED 9359821 FOR 1998) .	5–E8,12
99	Y07 4–SPD A/TRANS (M30), A/C FRT AUTO/AUX CONT (CJ2), ACTIVE BRAKE CTL (JL4), (EXC T&T WHL (N37), TAIL & S/LP (T89) (EXPORT)	12190424	1	1233.23	HARNESS, I/P WRG (MAY REQUIRE 12450028 I/P COMPT LP & 12102616 PWR RCPT CONN)	5–E8,12
99–00	Y07 4–SPD A/TRANS (M30), A/C FRT AUTO/AUX CONT (CJ2), ACTIVE BRAKE CTL (JL4), T&T WHL (N37), (EXC TAIL & S/LP (T89) (EXPORT)	12190424	1	1233.23	HARNESS, I/P WRG (MAY REQUIRE 12450028 I/P COMPT LP & 12102616 PWR RCPT CONN)	5–E8,12
99–00	Y07 4–SPD A/TRANS (M30), A/C MAN CONT (C60), ACTIVE BRAKE CTL (JL4), (EXC T&T WHL (N37), TAIL & S/LP (T89) (EXPORT)	12190427	1	1233.23	HARNESS, I/P WRG (MAY REQUIRE 12450028 I/P COMPT LP & 12102616 PWR RCPT CONN)	5–E8,12
99	Y07 6–SPD M/TRANS (MM6), A/C FRT AUTO/AUX CONT (CJ2), ACTIVE BRAKE CTL (JL4), T&T WHL (N37), (EXC TAIL & S/LP (T89) (EXPORT)	12190429	1	1233.23	HARNESS, I/P WRG (MAY REQUIRE 12450028 I/P COMPT LP & 12102616 PWR RCPT CONN)	5–E8,12
99–00	Y07 6–SPD M/TRANS (MM6), A/C MAN CONT (C60), ACTIVE BRAKE CTL (JL4), (EXC T&T WHL (N37), TAIL & S/LP (T89) (EXPORT)	12190432	1	1233.23	HARNESS, I/P WRG (MAY REQUIRE 12450028 I/P COMPT LP & 12102616 PWR RCPT CONN)	5–E8,12

cardiagn.com

2.480 HARNESS – WIRE, Chassis Wiring (Con't)

99–00	Y07 4–SPD A/TRANS (M30), A/C FRT AUTO/AUX CONT (CJ2), T&T WHL (N37), (EXC ACTIVE BRAKE CTL (JL4), TAIL & S/LP (T89) (EXPORT)	12190434	1	1233.23	HARNESS, I/P WRG (MAY REQUIRE 12450028 I/F COMPT LP & 12102616 PWR RCPT CONN)	5–E8,12
99–00	Y07 4–SPD A/TRANS (M30), A/C MAN CONT (C60), (EXC ACTIVE BRAKE CTL (JL4), T&T WHL (N37), TAIL & S/LP (T89) (EXPORT)	12190437	1	1233.23	HARNESS, I/P WRG (MAY REQUIRE 12450028 I/P COMPT LP & 12102616 PWR RCPT CONN)	5–E8,12
99–00	Y07 6–SPD M/TRANS (MM6), A/C FRT AUTO/AUX CONT (CJ2), T&T WHL (N37), (EXC ACTIVE BRAKE CTL (JL4), TAIL & S/LP (T89) (EXPORT)	12190439	1	1233.23	HARNESS, I/P WRG (MAY REQUIRE 12450028 I/P COMPT LP & 12102616 PWR RCPT CONN)	5–E8,12
99–00	Y07 6–SPD M/TRANS (MM6), A/C MAN CONT (C60), (EXC ACTIVE BRAKE CTL (JL4), T&T WHL (N37), TAIL & S/LP (T89) (EXPORT)	12190442	1	1233.23	HARNESS, I/P WRG (MAY REQUIRE 12450028 I/P COMPT LP & 12102616 PWR RCPT CONN)	5–E8,12
99–00	Y37 4–SPD A/TRANS (M30), 4 SPKR SYS (UQ5), (EXC ACTIVE BRAKE CTL (JL4) ..	15329320	1	1233.23	HARNESS, I/P WRG (MAY REQUIRE 12450028 I/P COMPT LP & 12102616 PWR RCPT CONN)	5–E20,12
99–00	Y37 4–SPD A/TRANS (M30), SPEAKER SYSTEM 6 (UZ6), (EXC ACTIVE BRAKE CTL (JL4)	15329321	1	1233.23	HARNESS, I/P WRG (MAY REQUIRE 12450028 I/P COMPT LP & 12102616 PWR RCPT CONN)	5–E20,12
99–00	Y37 6–SPD M/TRANS (MM6), 4 SPKR SYS (UQ5), (EXC ACTIVE BRAKE CTL (JL4) ..	15329322	1	1233.23	HARNESS, I/P WRG (MAY REQUIRE 12450028 I/P COMPT LP & 12102616 PWR RCPT CONN)	5–E20,12
99–00	Y37 6–SPD M/TRANS (MM6), SPEAKER SYSTEM 6 (UZ6), (EXC ACTIVE BRAKE CTL (JL4)	15329323	1	1233.23	HARNESS, I/P WRG (MAY REQUIRE 12450028 I/P COMPT LP & 12102616 PWR RCPT CONN)	5–E20,12
99	Y37 6–SPD M/TRANS (MM6), A/C MAN CONT (C60), ACTIVE BRAKE CTL (JL4), 4 SPKR SYS (UQ5)	15329332	1	1208.87	HARNESS, I/P WRG	5–E20,12
99	Y37 6–SPD M/TRANS (MM6), A/C MAN CONT (C60), ACTIVE BRAKE CTL (JL4), SPEAKER SYSTEM 6 (UZ6)	15329333	1	1208.87	HARNESS, I/P WRG	5–E20,12
99–00	Y67 4–SPD A/TRANS (M30), A/C FRT AUTO/AUX CONT (CJ2), T&T WHL (N37), (EXC TAIL & S/LP (T89) (EXPORT)	12190444	1	1233.23	HARNESS, I/P WRG (MAY REQUIRE 12450028 I/P COMPT LP & 12102616 PWR RCPT CONN)	5–E8,12
99–00	Y67 4–SPD A/TRANS (M30), A/C MAN CONT (C60), (EXC T&T WHL (N37), TAIL & S/LP (T89) (EXPORT)	12190447	1	1233.23	HARNESS, I/P WRG (MAY REQUIRE 12450028 I/P COMPT LP & 12102616 PWR RCPT CONN)	5–E8,12
99–00	Y67 6–SPD M/TRANS (MM6), A/C FRT AUTO/AUX CONT (CJ2), T&T WHL (N37), (EXC TAIL & S/LP (T89) (EXPORT)	12190449	1	1233.23	HARNESS, I/P WRG (MAY REQUIRE 12450028 I/P COMPT LP & 12102616 PWR RCPT CONN)	5–E8,12
99–00	Y67 6–SPD M/TRANS (MM6), A/C MAN CONT (C60), (EXC T&T WHL (N37), TAIL & S/LP (T89) (EXPORT)	12190452	1	1233.23	HARNESS, I/P WRG (MAY REQUIRE 12450028 I/P COMPT LP & 12102616 PWR RCPT CONN)	5–E8,12

cardiagn.com

2.480 HARNESS – WIRE, Chassis Wiring (Con't)

00	YY07 6–SPD M/TRANS (MM6), A/C FRT AUTO/AUX CONT (CJ2), (EXC ACTIVE BRAKE CTL (JL4), T&T WHL (N37), TAIL & S/LP (T89) (EXPORT)	10442572	1	1233.23	HARNESS, I/P WRG	5–E8,12
00	Y07 4–SPD A/TRANS (M30), A/C FRT AUTO/AUX CONT (CJ2), ACTIVE BRAKE CTL (JL4), T&T WHL (N37), (EXC TAIL & S/LP (T89) (EXPORT)	10442559	1	1233.23	HARNESS, I/P WRG (INCLUDES PROVISIONS FOR MAN. SUPPRESSION SYS. INCLUDES HARN. INLINE P/DOOR)	5–E8,12
00	Y07 4–SPD A/TRANS (M30), A/C MAN CONT (C60), ACTIVE BRAKE CTL (JL4), (EXC T&T WHL (N37), TAIL & S/LP (T89) (EXPORT)	10442562	1	1233.23	HARNESS, I/P WRG (INCLUDES PROVISIONS FOR MAN. SUPPRESSION SYS. INCLUDES HARN. INLINE P/DOOR)	5–E8,12
00	Y07 6–SPD M/TRANS (MM6), A/C FRT AUTO/AUX CONT (CJ2), ACTIVE BRAKE CTL (JL4), (EXC TAIL & S/LP (T89) (EXPORT)	10442563	1	1233.23	HARNESS, I/P WRG (INCLUDES PROVISIONS FOR MAN. SUPPRESSION SYS. INCLUDES HARN. INLINE P/DOOR)	5–E8,12
00	Y07 6–SPD M/TRANS (MM6). A/C MAN CONT (C60), ACTIVE BRAKE CTL (JL4), (EXC T&T WHL (N37)	10442566	1	1233.23	HARNESS, I/P WRG (INCLUDES PROVISIONS FOR MAN. SUPPRESSION SYS. INCLUDES HARN.INLINE P/DOOR)	5–E8,12
00	Y07 4–SPD A/TRANS (M30), A/C FRT AUTO/AUX CONT (CJ2), (EXC ACTIVE BRAKE CTL (JL4), TAIL & S/LP (T89) (EXPORT)	10442567	1	1233.23	HARNESS, I/P WRG (INCLUDES PROVISIONS FOR MAN. SUPPRESSION SYS. INCLUDES HARN.INLINE P/DOOR)	5–E8,12
00	Y07 4–SPD A/TRANS (M30), A/C MAN CONT (C60), (EXC ACTIVE BRAKE CTL (JL4), T&T WHL (N37)	10442570	1	1233.23	HARNESS, I/P WRG (INCLUDES PROVISIONS FOR MAN. SUPPRESSION SYS. INCLUDES HARN.INLINE P/DOOR)	5–E8,12
00	Y07 6–SPD M/TRANS (MM6), A/C FRT AUTO/AUX CONT (CJ2), (EXC ACTIVE BRAKE CTL (JL4), TAIL & S/LP (T89) (EXPORT)	10442571	1	1233.23	HARNESS, I/P WRG (INCLUDES PROVISIONS FOR MAN. SUPPRESSION SYS. INCLUDES HARN.INLINE P/DOOR)	5–E8,12
00	Y07 6–SPD M/TRANS (MM6), A/C MAN CONT (C60), (EXC ACTIVE BRAKE CTL (JL4), T&T WHL (N37)	10442574	1	1233.23	HARNESS, I/P WRG (INCLUDES PROVISIONS FOR MAN. SUPPRESSION SYS. INCLUDES HARN.INLINE P/DOOR)	5–E8,12
00	Y37 4–SPD A/TRANS (M30), A/C FRT AUTO/AUX CONT (CJ2), (EXC T&T WHL (N37), TAIL & S/LP (T89) (EXPORT)	10442575	1	1233.23	HARNESS, I/P WRG (INCLUDES PROVISIONS FOR MAN. SUPPRESSION SYS. INCLUDES HARN.INLINE P/DOOR)	5–E8,12
00	Y37 6–SPD M/TRANS (MM6), A/C FRT AUTO/AUX CONT (CJ2), (EXC T&T WHL (N37), TAIL & S/LP (T89) (EXPORT)	10442579	1	1233.23	HARNESS, I/P WRG (INCLUDES PROVISIONS FOR MAN. SUPPRESSION SYS. INCLUDES HARN.INLINE P/DOOR)	5–E20,12
00	Y37 6–SPD M/TRANS (MM6), A/C MAN CONT (C60), SPEAKER SYSTEM 6 (UZ6), (EXC ACTIVE BRAKE CTL (JL4)	10442582	1	1233.23	HARNESS, I/P WRG (INCLUDES PROVISIONS FOR MAN. SUPPRESSION SYS. INCLUDES HARN.INLINE P/DOOR)	5–E8,12
00	Y37 6–SPD M/TRANS (MM6), A/C MAN CONT (C60), 4 SPKR SYS (UQ5), (EXC ACTIVE BRAKE CTL (JL4) ..	10442583	1	1233.23	HARNESS, I/P WRG (INCLUDES PROVISIONS FOR MAN. SUPPRESSION SYS. INCLUDES HARN.INLINE P/DOOR)	5–E20,12

cardiagn.com

2.480 HARNESS – WIRE, Chassis Wiring (Con't)

00	Y37 6–SPD M/TRANS (MM6), A/C MAN CONT (C60), ACTIVE BRAKE CTL (JL4), 4 SPKR SYS (UQ5)	10442585	1	1233.23	HARNESS, I/P WRG (INCLUDES PROVISIONS FOR MAN. SUPPRESSION SYS. INCLUDES HARN.INLINE P/DOOR)	5–E20,12
00	Y37 6–SPD M/TRANS (MM6), A/C MAN CONT (C60), ACTIVE BRAKE CTL (JL4), SPEAKER SYSTEM 6 (UZ6)	10442586	1	1233.23	HARNESS, I/P WRG (INCLUDES PROVISIONS FOR MAN. SUPPRESSION SYS. INCLUDES HARN.INLINE P/DOOR)	5–E20,12
00	Y67 4 -SPD A/TRANS (M30), A/C FRT AUTO/AUX CONT (CJ2). (EXC TAIL & S/LP (T89) (EXPORT)	10442575	1	1233.23	HARNESS, I/P WRG (INCLUDES PROVISIONS FOR MAN. SUPPRESSION SYS. INCLUDES HARN.INLINE P/DOOR)	5–E8,12
00	Y67 4–SPD A/TRANS (M30), A/C MAN CONT (C60), (EXC T&T WHL (N37)	10442578	1	1233.23	HARNESS, I/P WRG (INCLUDES PROVISIONS FOR MAN. SUPPRESSION SYS. INCLUDES HARN.INLINE P/DOOR)	5–E8,12
00	Y67 6–SPD M/TRANS (MM6), A/C MAN CONT (C60), (EXC T&T WHL (N37)	10442582	1	1233.23	HARNESS, I/P WRG (INCLUDES PROVISIONS FOR MAN. SUPPRESSION SYS. INCLUDES HARN.INLINE P/DOOR)	5–E8,12
01–02	YY37 A/C FRT AUTO/AUX CONT (CJ2)	10310789	1	1233.23	HARNESS, I/P WRG	5–E8,12
01	YY67 6–SPD M/TRANS (MM6), A/C MAN CONT (C60), (EXC T&T WHL (N37), (2ND DES)	10310790	1	1233.23	HARNESS, I/P WRG (2ND DSN USED ON/AFTER VIN #15107689, (1ST DSN 10448106))	5–E8,12
01	Y07 4–SPD A/TRANS (M30), A/C FRT AUTO/AUX CONT (CJ2), ACTIVE BRAKE CTL (JL4), (EXC TAIL & S/LP (T89) (EXPORT)	10310779	1	1233.23	HARNESS, I/P WRG	5–E8,12
01	Y07 4–SPD A/TRANS (M30), A/C MAN CONT (C60), ACTIVE BRAKE CTL (JL4), (EXC T&T WHL (N37), (2ND DES)	10310780	1	1233.23	HARNESS, I/P WRG (2ND DSN USED ON/AFTER VIN #15107689, (1ST DSN 10448088))	5–E8,12
01	Y07 6–SPD M/TRANS (MM6). A/C FRT AUTO/AUX CONT (CJ2), ACTIVE BRAKE CTL (JL4), (EXC TAIL & S/LP (T89) (EXPORT), (2ND DES)	10310781	1	1233.23	HARNESS, I/P WRG (2ND DSN USED ON/AFTER VIN #15107689, (1ST DSN 10448089))	5–E8,12
01	Y07 6–SPD M/TRANS (MM6), A/C MAN CONT (C60), ACTIVE BRAKE CTL (JL4), (EXC T&T WHL (N37), (2ND DES)	10310782	1	1233.23	HARNESS, I/P WRG (2ND DSN USED ON/AFTER VIN #15107689, (1ST DSN 10448090))	5–E8,12
01	Y07 4–SPD A/TRANS (M30), A/C FRT AUTO/AUX CONT (CJ2), ACTIVE BRAKE CTL (JL4), (EXC T&T WHL (N37), TAIL & S/LP (T89) (EXPORT), (1ST DES)	10448087	1	1233.23	HARNESS, I/P WRG (1ST DSN USED B/4 VIN #15107689, (2ND DSN 10310779))	5–E8,12
01	Y07 4–SPD A/TRANS (M30), A/C MAN CONT (C60), ACTIVE BRAKE CTL (JL4), (EXC T&T WHL (N37), (1ST DES)	10448088	1	1233.23	HARNESS, I/P WRG (1ST DSN USED B/4 VIN #15107689, (2ND DSN 10310780))	5–E8,12

cardiagn.com

2.480 HARNESS – WIRE, Chassis Wiring (Con't)

01	Y07 6–SPD M/TRANS (MM6), A/C FRT AUTO/AUX CONT (CJ2), ACTIVE BRAKE CTL (JL4), T&T WHL (N37), (EXC TAIL & S/LP (T89) (EXPORT), (1ST DES)	10448089	1	1233.23	HARNESS, I/P WRG (1ST DSN USED B/4 VIN #15107689, (2ND DSN 10310781))	5–E8,12
01	Y07 6–SPD M/TRANS (MM6), A/C MAN CONT (C60), ACTIVE BRAKE CTL (JL4), (EXC T&T WHL (N37), (1ST DES)	10448090	1	1233.23	HARNESS, I/P WRG (1ST DSN USED B/4 VIN #15107689, (2ND DSN 1031[illegible]2))	5–E8,12
01	Y37 A/C FRT AUTO/AUX CONT (CJ2)	10448105	1	1233.23	HARNESS, I/P WRG	5–E8,12
01	Y67 4–SPD A/TRANS (M30), A/C FRT AUTO/AUX CONT (CJ2), (EXC TAIL & S/LP (T89) (EXPORT), (2ND DES)	10310787	1	1233.23	HARNESS, I/P WRG (2ND DSN USED ON/AFTER VIN #15107689, (1ST DSN 10448103))	5–E8,12
01	Y67 4–SPD A/TRANS (M30), A/C MAN CONT (C60), (EXC T&T WHL (N37), (2ND DES)	10310788	1	1233.23	HARNESS, I/P WRG (2ND DSN USED ON/AFTER VIN #15107689, (1ST DSN 10448104))	5–E8,12
01	Y67 6–SPD M/TRANS (MM6), A/C FRT AUTO/AUX CONT (CJ2), (EXC TAIL & S/LP (T89) (EXPORT), (2ND DES)	10310789	1	1233.23	HARNESS, I/P WRG (2ND DSN USED ON/AFTER VIN #15107689, (1ST DSN 10448105))	5–E8,12
01	Y67 4–SPD A/TRANS (M30), A/C FRT AUTO/AUX CONT (CJ2), T&T WHL (N37), (EXC TAIL & S/LP (T89) (EXPORT), (1ST DES)	10448103	1	1233.23	HARNESS, I/P WRG (1ST DSN USED B/4 VIN #15107689, (2ND DSN 10310787))	5–E8,12
01	Y67 4–SPD A/TRANS (M30), A/C MAN CONT (C60), (EXC T&T WHL (N37), (1ST DES) .	10448104	1	1233.23	HARNESS, I/P WRG (1ST DSN USED B/4 VIN #[illegible]5107689, (2ND DSN 10310788))	5–[illegible]
01	Y67 6–SPD M/TRANS (MM6), A/C FRT AUTO/AUX CONT (CJ2), T&T WHL (N37), (EXC TAIL & S/LP (T89) (EXPORT), (1ST DES)	10448105	1	1233.23	HARNESS, I/P WRG (1ST DSN USED B/4 VIN #1510[illegible]89, (2ND DSN 10310789))	[illegible]–E8,12
01	Y67 6–SPD M/TRANS (MM6), A/C MAN CONT (C60), (EXC T&T WHL (N37), (1ST DES) .	10448106	1	1233.23	HARNESS, I/P WRG (1ST DSN USED B/4 VIN #15107689, (2ND DSN 10310790))	5–E8,12
02	YY07 4–SPD A/TRANS (M30), A/C FRT AUTO/AUX CONT (CJ2), (EXC TAIL & S/LP (T89) (EXPORT)	10310779	1	1233.23	HARNESS, I/P WRG	5–E8,12
02	YY07 4–SPD A/TRANS (M30), A/C MAN CONT (C60), (EXC T&T WHL (N37)	10310780	1	1233.23	HARNESS, I/P WRG	5–E8,12
02	YY67 4–SPD A/TRANS (M30), A/C MAN CONT (C60), (EXC T&T WHL (N37)	10310788	1	1233.23	HARNESS, I/P WRG	5–E8,12
02	YY67 6–SPD M/TRANS (MM6), A/C MAN CONT (C60), (EXC T&T WHL (N37)	10310790	1	1233.23	HARNESS, I/P WRG	5–E8,12
02	Y07 6–SPD M/TRANS (MM6), A/C FRT AUTO/AUX CONT (CJ2), (EXC TAIL & S/LP (T89) (EXPORT)	10310781	1	1233.23	HARNESS, I/P WRG	5–E8,12
02	Y07 6–SPD M/TRANS (MM6), A/C MAN CONT (C60), (EXC T&T WHL (N37)	10310782	1	1233.23	HARNESS, I/P WRG	5–E8,12

cardiagn.com

2.480 HARNESS – WIRE, Chassis Wiring(Con't)

02	Y67 4–SPD A/TRANS (M30), A/C FRT AUTO/AUX CONT (CJ2), (EXC TAIL & S/LP (T89) (EXPORT)	10310787	1	1233.23	HARNESS, I/P WRG	5–E8,12
02	Y67 6–SPD M/TRANS (MM6), A/C FRT AUTO/AUX CONT (CJ2), (EXC TAIL & S/LP (T89) (EXPORT)	10310789	1	1233.23	HARNESS, I/P WRG	5–E8,12
97	Y 4–SPD A/TRANS (M30), (EXC CHASSIS, REALTIME DAMPING (F45)	12163195	1	375.00	HARNESS, TRANS WRG (AC–DELCO #12163195)	4–E4,56
97	Y 6–SPD M/TRANS (MM6), (EXC CHASSIS, REALTIME DAMPING (F45)	12163196	1	375.00	HARNESS, TRANS WRG (AC–DELCO #12163196)	3–J13,6
97	Y 4–SPD A/TRANS (M30), CHASSIS, REALTIME DAMPING (F45)	12163705	1	628.00	HARNESS, TRANS WRG (AC–DELCO #12163705)	4–E4,56
97	Y 6–SPD M/TRANS (MM6), CHASSIS, REALTIME DAMPING (F45)	12163706	1	628.00	HARNESS, TRANS WRG (AC–DELCO #12163706)	3–J13,6
98	Y 4–SPD A/TRANS (M30), (EXC CHASSIS, REALTIME DAMPING (F45), FRT ABS BRAKE LOC (JAG)	12163195	1	375.00	HARNESS, TRANS WRG (AC–DELCO #12163195)	4–E4,56
98	Y 6–SPD M/TRANS (MM6), (EXC CHASSIS, REALTIME DAMPING (F45), FRT ABS BRAKE LOC (JAG), EUROPEAN PROVISIONS (VD1) (EXPORT)	12163196	1	375.00	HARNESS, TRANS WRG (AC–DELCO #12163196)	3–J13,6
98	Y 4–SPD A/TRANS (M30), CHASSIS, REALTIME DAMPING (F45), (EXC FRT ABS BRAKE LOC (JAG)	12163705	1	628.00	HARNESS, TRANS WRG (AC–DELCO #12163705)	4–E4,56
98	Y 6–SPD M/TRANS (MM6), CHASSIS, REALTIME DAMPING (F45), (EXC FRT ABS BRAKE LOC (JAG), EUROPEAN PROVISIONS (VD1) (EXPORT)	12163706	1	628.00	HARNESS, TRANS WRG (AC–DELCO #12163706)	3–J13,6
98	Y 4–SPD A/TRANS (M30), FRT ABS BRAKE LOC (JAG), (EXC CHASSIS, REALTIME DAMPING (F45)	12163790	1	367.43	HARNESS, TRANS WRG	3–G9,10
98	Y 6–SPD M/TRANS (MM6), FRT ABS BRAKE LOC (JAG), (EXC CHASSIS, REALTIME DAMPING (F45), EUROPEAN PROVISIONS (VD1) (EXPORT)	12163791	1	367.43	HARNESS, TRANS WRG	3–G9,10
98	Y 4–SPD A/TRANS (M30), CHASSIS, REALTIME DAMPING (F45), FRT ABS BRAKE LOC (JAG)	12163792	1	367.43	HARNESS, TRANS WRG	3–G9,10
98	Y 6–SPD M/TRANS (MM6), CHASSIS, REALTIME DAMPING (F45), FRT ABS BRAKE LOC (JAG), (EXC EUROPEAN PROVISIONS (VD1) (EXPORT)	12163793	1	367.43	HARNESS, TRANS WRG	3–G9,10

cardiagn.com

2.480 HARNESS – WIRE, Chassis Wiring(Con't)

99–00	Y 4–SPD A/TRANS (M30), (EXC CHASSIS, REALTIME DAMPING (F45)	12189826	1	248.00	HARNESS, TRANS WRG (AC–DELCO #12189826)	3–G9,10
99–00	Y 6–SPD M/TRANS (MM6), (EXC CHASSIS, REALTIME DAMPING (F45), EUROPEAN PROVISIONS (VD1) (EXPORT)	12189827	1	201.00	HARNESS, TRANS WRG (AC–DELCO #12189827)	3–G9,10
99–00	Y 4–SPD A/TRANS (M30), CHASSIS, REALTIME DAMPING (F45)	12189828	1	375.00	HARNESS, TRANS WRG (AC–DELCO #12189828)	3–G9,10
99–00	Y 6–SPD M/TRANS (MM6), CHASSIS, REALTIME DAMPING (F45), (EXC EUROPEAN PROVISIONS (VD1) (EXPORT)	12189829	1	311.00	HARNESS, TRANS WRG (AC–DELCO #12189829)	3–G9,10
01–02	Y 4–SPD A/TRANS (M30), (EXC CHASSIS, REALTIME DAMPING (F45)	10448120	1	248.00	HARNESS, TRANS WRG	3–G18,10
01–02	Y 6–SPD M/TRANS (MM6), (EXC CHASSIS, REALTIME DAMPING (F45), EUROPEAN PROVISIONS (VD1) (EXPORT)	10448121	1		HARNESS, TRANS WRG	3–G18,10
01–02	Y 4–SPD A/TRANS (M30), CHASSIS, REALTIME DAMPING (F45)	10448122	1		HARNESS, TRANS WRG	3–G18,10
01–02	Y 6–SPD M/TRANS (MM6), CHASSIS, REALTIME DAMPING (F45), (EXC EUROPEAN PROVISIONS (VD1) (EXPORT)	10448123	1	311.00	HARNESS, TRANS WRG	3–G18,10
01–02	YY37	10448126	1		HARNESS, TRANS WRG	3–G18,10
97	Y 5.7G (LS1)	15320549	1	29.84	WIRE, KNOCK SEN	1–H10,536
98	Y 5.7G (LS1) (1ST DES)	15320549	1	29.84	WIRE, KNOCK SEN (USE W/KNOCK SENSOR STAMPED 10456222 & W/INDEX TAB ON CONNECTOR TO SENSOR) (FOR 2ND DES SEE 15320925)	1–H10,536
98	Y 5.7G (LS1), (2ND DES)	15320925	1	29.84	WIRE, KNOCK SEN (USE W/KNOCK SENSOR STAMPED 10456603 & CONNECTOR W/O INDEX TAB) (FOR 1ST DES SEE 15320549)	1–H10,536
99–01	Y 5.7G (LS1)	15372170	1	29.84	WIRE, KNOCK SEN	1–J17,536
01	Y 5.7S (LS6)	15372170	1	29.84	WIRE, KNOCK SEN	1–J17,536
02	Y 5.7G (LS1)	15372170	1	29.84	WIRE, KNOCK SEN	1–J17,536
02	Y 5.7S (LS6)	15372170	1	29.84	WIRE, KNOCK SEN	1–J17,536
	*EXPORT****************EXPORT****************EXPORT****************EXPORT****************EXPORT*					
97	Y EUROPEAN PROVISIONS (VD1) (EXPORT)	12189883	1	944.44	HARNESS, FWD LP WRG	2–F15,2
97	Y SIG & MKR LP (T90) (EXPORT), VE1 (EXPORT) ..	12189884	1	295.80	HARNESS, FWD LP WRG	2–F15,2
99	Y07–67 SIG & MKR LP (T90) (EXPORT), (EXC ACTIVE BRAKE CTL (JL1)	12189975	1	301.92	HARNESS, FWD LP WRG	2–F15,2
99	Y07–67 ACTIVE BRAKE CTL (JL4), SIG & MKR LP (T90) (EXPORT)	12189978	1	300.90	HARNESS, FWD LP WRG	2–F15,2

© 2001 GENERAL MOTORS SERVICE PARTS OPERATIONS–CHEVROLET–15Y

cardiagn.com

2.480 HARNESS – WIRE, Chassis Wiring(Con't)

00	Y07–67 SIG & MKR LP (T90) (EXPORT), (EXC ACTIVE BRAKE CTL (JL4)	15329405	1	301.92	HARNESS, FWD LP WRG	2–F15,2
00	Y07–67 ACTIVE BRAKE CTL (JL4), SIG & MKR I P (T90) (EXPORT)	15329408	1	300.90	HARNESS, FWD LP WRG	2–F15,2
02	YY07–67 SIG & MKR LP (T90) (EXPORT)	10310798	1	300.90	HARNESS, FWD LP WRG	2–F15,2
97	Y07 SIG & MKR LP (T90) (EXPORT)	15329463	1	40.09	HARNESS, FWD LP WRG HARN EXTN	2–F15,1
98–99	Y07–67 SIG & MKR LP (T90) (EXPORT)	15329463	1	40.09	HARNESS, FWD LP WRG HARN EXTN	2–F15,1
00–02	Y07–67 SIG & MKR LP (T90) (EXPORT)	15329463	1	40.09	HARNESS, FWD LP WRG HARN EXTN	2–F15,1
97	Y 4–SPD A/TRANS (M30), A/C FRT AUTO/AUX CONT (CJ2), TAIL & S/LP (T89) (EXPORT), (EXC SPECIAL TAIL & S/LP (T93), CANADIAN (Z49)	12189872	1	1257.59	HARNESS, I/P WRG	5–E8,12
97	Y 6–SPD M/TRANS (MM6), A/C FRT AUTO/AUX CONT (CJ2), TAIL & S/LP (T89) (EXPORT), (EXC SPECIAL TAIL & S/LP (T93), CANADIAN (Z49)	12189873	1	1257.59	HARNESS, I/P WRG	5–E8,12
97	Y 4–SPD A/TRANS (M30), A/C MAN CONT (C60), TAIL & S/LP (T89) (EXPORT), (EXC SPECIAL TAIL & S/LP (T93), CANADIAN (Z49)	12189878	1		HARNESS, I/P WRG	5–E8,12
98	Y07 4–SPD A/TRANS (M30), A/C FRT AUTO/AUX CONT (CJ2), TAIL & S/LP (T89) (EXPORT), (EXC FRT ABS BRAKE LOC (JAG), SPECIAL TAIL & S/LP (T93), CANADIAN (Z49)	12189817	1	1257.59	HARNESS, I/P WRG	5–E8,12
98	Y07 6–SPD M/TRANS (MM6), A/C FRT AUTO/AUX CONT (CJ2), TAIL & S/LP (T89) (EXPORT), (EXC FRT ABS BRAKE LOC (JAG), SPECIAL TAIL & S/LP (T93), CANADIAN (Z49)	12189818	1	1257.59	HARNESS, I/P WRG	5–E8,12
98	Y07 4–SPD A/TRANS (M30), A/C MAN CONT (C60), TAIL & S/LP (T89) (EXPORT), (EXC FRT ABS BRAKE LOC (JAG), SPECIAL TAIL & S/LP (T93), CANADIAN (Z49) ...	12189823	1	1257.59	HARNESS, I/P WRG	5–E8,12
98	Y07 6–SPD M/TRANS (MM6), A/C MAN CONT (C60), TAIL & S/LP (T89) (EXPORT), (EXC FRT ABS BRAKE LOC (JAG), SPECIAL TAIL & S/LP (T93), CANADIAN (Z49)	12189824	1	1257.59	HARNESS, I/P WRG	5–E8,12

cardiagn.com

2.480 HARNESS – WIRE, Chassis Wiring(Con't)

98	Y07 4–SPD A/TRANS (M30), A/C FRT AUTO/AUX CONT (CJ2), FRT ABS BRAKE LOC (JAG), ACTIVE BRAKE CTL (JL4), TAIL & S/LP (T89) (EXPORT)	12190404	1	1233.23	HARNESS, I/P WRG (MUST BE USED W/BODY CONT MDL LABELED 9359821 FOR 1998) .	5–E8,12
98	Y07 6–SPD M/TRANS (MM6), A/C FRT AUTO/AUX CONT (CJ2), FRT ABS BRAKE LOC (JAG), ACTIVE BRAKE CTL (JL4), TAIL & S/LP (T89) (EXPORT)	12190405	1	1233.23	HARNESS, I/P WRG (MUST BE USED W/BODY CONT MDL LABELED 9359821 FOR 1998) .	5–E8,12
98	Y07 4–SPD A/TRANS (M30), A/C MAN CONT (C60), FRT ABS BRAKE LOC (JAG), ACTIVE BRAKE CTL (JL4), TAIL & S/LP (T89) (EXPORT)	12190410	1	1233.23	HARNESS, I/P WRG (MUST BE USED W/BODY CONT MDL LABELED 9359821 FOR 1998) .	5–E8,12
98	Y07 6–SPD M/TRANS (MM6), A/C MAN CONT (C60), FRT ABS BRAKE LOC (JAG), ACTIVE BRAKE CTL (JL4), TAIL & S/LP (T89) (EXPORT)	12190411	1	1233.23	HARNESS, I/P WRG (MUST BE USED W/BODY CONT MDL LABELED 9359821 FOR 1998) .	5–E8,12
98	Y07 4–SPD A/TRANS (M30), A/C FRT AUTO/AUX CONT (CJ2), FRT ABS BRAKE LOC (JAG), TAIL & S/LP (T89) (EXPORT), (EXC ACTIVE BRAKE CTL (JL4), SPECIAL TAIL & S/LP (T93), CANADIAN (Z49)	12190416	1	1257.59	HARNESS, I/P WRG (MUST BE USED W/BODY CONT MDL LABELED 9359821 FOR 1998) .	5–E8,12
98	Y07 6–SPD M/TRANS (MM6), A/C FRT AUTO/AUX CONT (CJ2), FRT ABS BRAKE LOC (JAG), TAIL & S/LP (T89) (EXPORT), (EXC ACTIVE BRAKE CTL (JL4), SPECIAL TAIL & S/LP (T93), CANADIAN (Z49)	12190417	1	1257.59	HARNESS, I/P WRG (MUST BE USED W/BODY CONT MDL LABELED 9359821 FOR 1998) .	5–E8,12
98	Y07 4–SPD A/TRANS (M30), A/C MAN CONT (C60), FRT ABS BRAKE LOC (JAG), TAIL & S/LP (T89) (EXPORT), (EXC ACTIVE BRAKE CTL (JL4), SPECIAL TAIL & S/LP (T93), CANADIAN (Z49)	12190422	1	1257.59	HARNESS, I/P WRG (MUST BE USED W/BODY CONT MDL LABELED 9359821 FOR 1998) .	5–E8,12
98	Y07 6–SPD M/TRANS (MM6), A/C MAN CONT (C60), FRT ABS BRAKE LOC (JAG), TAIL & S/LP (T89) (EXPORT), (EXC ACTIVE BRAKE CTL (JL4), SPECIAL TAIL & S/LP (T93), CANADIAN (Z49) . . .	12190423	1	1257.59	HARNESS, I/P WRG (MUST BE USED W/BODY CONT MDL LABELED 9359821 FOR 1998) .	5–E8,12
98	Y67 4–SPD A/TRANS (M30), A/C FRT AUTO/AUX CONT (CJ2), TAIL & S/LP (T89) (EXPORT), (EXC FRT ABS BRAKE LOC (JAG), SPECIAL TAIL & S/LP (T93), CANADIAN (Z49) .	12189809	1	1257.59	HARNESS, I/P WRG	5–E8,12

cardiagn.com

2.480 HARNESS – WIRE, Chassis Wiring(Con't)

98	Y67 4–SPD A/TRANS (M30), A/C MAN CONT (C60), TAIL & S/LP (T89) (EXPORT), (EXC FRT ABS BRAKE LOC (JAG), SPECIAL TAIL & S/LP (T93), CANADIAN (Z49)	12189810	1	1257.59	HARNESS, I/P WRG	5–E8,12
98	Y67 6–SPD M/TRANS (MM6), A/C FRT AUTO/AUX CONT (CJ2), TAIL & S/LP (T89) (EXPORT), (EXC FRT ABS BRAKE LOC (JAG), SPECIAL TAIL & S/LP (T93), CANADIAN (Z49)	12189811	1	1257.59	HARNESS, I/P WRG	5–E8,12
98	Y67 6–SPD M/TRANS (MM6), A/C MAN CONT (C60), TAIL & S/LP (T89) (EXPORT), (EXC FRT ABS BRAKE LOC (JAG), SPECIAL TAIL & S/LP (T93), CANADIAN (Z49)	12189812	1	1257.59	HARNESS, I/P WRG	5–E8,12
98	Y67 4–SPD A/TRANS (M30), A/C FRT AUTO/AUX CONT (CJ2), FRT ABS BRAKE LOC (JAG), TAIL & S/LP (T89) (EXPORT)	12189988	1	1233.23	HARNESS, I/P WRG (MUST BE USED W/BODY CONT MDL LABELED 9359821 FOR 1998) .	5–E8,12
98	Y67 4–SPD A/TRANS (M30), A/C MAN CONT (C60), FRT ABS BRAKE LOC (JAG), TAIL & S/LP (T89) (EXPORT)	12189989	1	1233.23	HARNESS, I/P WRG (MUST BE USED W/BODY CONT MDL LABELED 9359821 FOR 1998) .	5–E8,12
98	Y67 6–SPD M/TRANS (MM6), A/C FRT AUTO/AUX CONT (CJ2), FRT ABS BRAKE LOC (JAG), TAIL & S/LP (T89) (EXPORT)	12189990	1	1233.23	HARNESS, I/P WRG (MUST BE USED W/BODY CONT MDL LABELED 9359821 FOR 1998) .	5–E8,12
98	Y67 6–SPD M/TRANS (MM6), A/C MAN CONT (C60), FRT ABS BRAKE LOC (JAG), TAIL & S/LP (T89) (EXPORT)	12189991	1	1233.23	HARNESS, I/P WRG (MUST BE USED W/BODY CONT MDL LABELED 9359821 FOR 1998) .	5–E8,12
99–00	Y07 4–SPD A/TRANS (M30), A/C FRT AUTO/AUX CONT (CJ2), ACTIVE BRAKE CTL (JL4), TAIL & S/LP (T89) (EXPORT)	12190[illegible]	1	1233.23	HARNESS, I/P WRG (MAY REQUIRE 12450028 I/P COMPT LP & 12102616 PWR RCPT CONN)	5–E8,12
99–00	Y07 4–SPD A/TRANS (M30), A/C MAN CONT (C60), ACTIVE BRAKE CTL (JL4), TAIL & S/LP (T89) (EXPORT)	12190428	1	1233.23	HARNESS, I/P WRG (MAY REQUIRE 12450028 I/P COMPT LP & 12102616 PWR RCPT CONN)	5–E8,12
99–00	Y07 6–SPD M/TRANS (MM6), A/C FRT AUTO/AUX CONT (CJ2), ACTIVE BRAKE CTL (JL4), TAIL & S/LP (T89) (EXPORT)	12190431	1	1233.23	HARNESS, I/P WRG (MAY REQUIRE 12450028 I/P COMPT LP & 12102616 PWR RCPT CONN)	5–E8,12
99–00	Y07 6–SPD M/TRANS (MM6), A/C MAN CONT (C60), ACTIVE BRAKE CTL (JL4), TAIL & S/LP (T89) (EXPORT)	12190433	1	1233.23	HARNESS, I/P WRG (MAY REQUIRE 12450028 I/P COMPT LP & 12102616 PWR RCPT CONN)	5–E8,12
99–00	Y07 4–SPD A/TRANS (M30), A/C FRT AUTO/AUX CONT (CJ2), TAIL & S/LP (T89) (EXPORT), (EXC ACTIVE BRAKE CTL (JL4)	12190436	1	1257.59	HARNESS, I/P WRG (MAY REQUIRE 12450028 I/P COMPT LP & 12102616 PWR RCPT CONN)	5–E8,12

cardiagn.com

2.480 HARNESS – WIRE, Chassis Wiring(Con't)

99–00	Y07 4–SPD A/TRANS (M30), A/C MAN CONT (C60), TAIL & S/LP (T89) (EXPORT), (EXC ACTIVE BRAKE CTL (JL4)	12190438	1	1257.59	HARNESS, I/P WRG (MAY REQUIRE 12450028 I/P COMPT LP & 12102616 PWR RCPT CONN)	5–E8,12
99–00	Y07 6–SPD M/TRANS (MM6), A/C FRT AUTO/AUX CONT (CJ2), TAIL & S/LP (T89) (EXPORT), (EXC ACTIVE BRAKE CTL (JL4)	12190441	1	1257.59	HARNESS, I/P WRG (MAY REQUIRE 12450028 I/P COMPT LP & 12102616 PWR RCPT CONN)	5–E8,12
99–00	Y07 6–SPD M/TRANS (MM6), A/C MAN CONT (C30), TAIL & S/LP (T89) (EXPORT), (EXC ACTIVE BRAKE CTL (JL4)	12190443	1	1257.59	HARNESS, I/P WRG (MAY REQUIRE 12450028 I/P COMPT LP & 12102616 PWR RCPT CONN)	5–E8,12
99–00	Y67 4–SPD A/TRANS (M30), A/C FRT AUTO/AUX CONT (CJ2), TAIL & S/LP (T89) (EXPORT)	12190446	1	1233.23	HARNESS, I/P WRG (MAY REQUIRE 12450028 I/P COMPT LP & 12102616 PWR RCPT CONN)	5–E8,12
99–00	Y67 4–SPD A/TRANS (M30), A/C MAN CONT (C60), TAIL & S/LP (T89) (EXPORT)	12190448	1	1233.23	HARNESS, I/P WRG (MAY REQUIRE 12450028 I/P COMPT LP & 12102616 PWR RCPT CONN)	5–E8,12
99–00	Y67 6–SPD M/TRANS (MM6), A/C FRT AUTO/AUX CONT (CJ2), TAIL & S/LP (T89) (EXPORT)	12190451	1	1233.23	HARNESS, I/P WRG (MAY REQUIRE 12450028 I/P COMPT LP & 12102616 PWR RCPT CONN)	5–E8,12
99–00	Y67 6–SPD M/TRANS (MM6), A/C MAN CONT (C60), TAIL & S/LP (T89) (EXPORT)	12190453	1	1233.23	HARNESS, I/P WRG (MAY REQUIRE 12450028 I/P COMPT LP & 12102616 PWR RCPT CONN)	5–E8,12
00	Y07 4–SPD A/TRANS (M30), A/C FRT AUTO/AUX CONT (CJ2), ACTIVE BRAKE CTL (JL4), TAIL & S/LP (T89) (EXPORT)	10442561	1	1233.23	HARNESS, I/P WRG (INCLUDES PROVISIONS FOR MAN. SUPPRESSION SYS. INCLUDES HARN. INLINE P/DOOR)	5–E8,12
00	Y07 6–SPD M/TRANS (MM6), A/C FRT AUTO/AUX CONT (CJ2), ACTIVE BRAKE CTL (JL4), TAIL & S/LP (T89) (EXPORT)	10442565	1	1233.23	HARNESS, I/P WRG (INCLUDES PROVISIONS FOR MAN. SUPPRESSION SYS. INCLUDES HARN. INLINE P/DOOR)	5–E8,12
00	Y07 4–SPD A/TRANS (M30), A/C FRT AUTO/AUX CONT (CJ2), TAIL & S/LP (T89) (EXPORT), (EXC ACTIVE BRAKE CTL (JL4)	10442569	1	1257.59	HARNESS, I/P WRG (INCLUDES PROVISIONS FOR MAN. SUPPRESSION SYS. INCLUDES HARN.INLINE P/DOOR)	5–E8,12
00	Y07 6–SPD M/TRANS (MM6), A/C FRT AUTO/AUX CONT (CJ2), TAIL & S/LP (T89) (EXPORT), (EXC ACTIVE BRAKE CTL (JL4)	10442573	1	1257.59	HARNESS, I/P WRG (INCLUDES PROVISIONS FOR MAN. SUPPRESSION SYS. INCLUDES HARN.INLINE P/DOOR)	5–E8,12
00	Y07 4–SPD A/TRANS (M30), A/C MAN CONT (C60), ACTIVE BRAKE CTL (JL4), TAIL & S/LP (T89) (EXPORT)	15329429	1	1233.23	HARNESS, I/P WRG	5–E8,12
00	Y07 6–SPD M/TRANS (MM6), A/C MAN CONT (C60), ACTIVE BRAKE CTL (JL4), TAIL & S/LP (T89) (EXPORT)	15329434	1	1233.23	HARNESS, I/P WRG	5–E8,12

cardiagn.com

2.480 HARNESS – WIRE, Chassis Wiring(Con't)

00	Y07 4–SPD A/TRANS (M30), A/C MAN CONT (C60), TAIL & S/LP (T89) (EXPORT), (EXC ACTIVE BRAKE CTL (JL4)	15329439	1	1257.59	HARNESS, I/P WRG	5–E8,12
00	Y07 6–SPD M/TRANS (MM6), A/C MAN CONT (C60), TAIL & S/LP (T89) (EXPORT), (EXC ACTIVE BRAKE CTL (JL4)	15329444	1	1257.59	HARNESS, I/P WRG	5–E8,12
00	Y67 4–SPD A/TRANS (M30), A/C FRT AUTO/AUX CONT (CJ2), TAIL & S/LP (T89) (EXPORT)	10442577	1	1233.23	HARNESS, I/P WRG (INCLUDES PROVISIONS FOR MAN. SUPPRESSION SYS. INCLUDES HARN.INLINE P/DOOR)	5–E8,12
00	Y67 6–SPD M/TRANS (MM6), A/C FRT AUTO/AUX CONT (CJ2), TAIL & S/LP (T89) (EXPORT)	10442581	1	1233.23	HARNESS, I/P WRG (INCLUDES PROVISIONS FOR MAN. SUPPRESSION SYS. INCLUDES HARN.INLINE P/DOOR)	5–E8,12
00	Y67 4–SPD A/TRANS (M30), A/C MAN CONT (C60), TAIL & S/LP (T89) (EXPORT)	15329449	1	1233.23	HARNESS, I/P WRG	5–E8,12
00	Y67 6–SPD M/TRANS (MM6), A/C MAN CONT (C60), TAIL & S/LP (T89) (EXPORT)	15329454	1	1233.23	HARNESS, I/P WRG	5–E8,12
01	Y07 4–SPD A/TRANS (M30), A/C FRT AUTO/AUX CONT (CJ2), ACTIVE BRAKE CTL (JL4), TAIL & S/LP (T89) (EXPORT), (2ND DES)	10310783	1	1233.23	HARNESS, I/P WRG (2ND DSN USED ON/AFTER VIN #15107689, (1ST DSN 10448091))	5–E8,12
01	Y07 6–SPD M/TRANS (MM6), A/C FRT AUTO/AUX CONT (CJ2), ACTIVE BRAKE CTL (JL4), TAIL & S/LP (T89) (EXPORT), (2ND DES)	10310784	1	1233.23	HARNESS, I/P WRG (2ND DSN USED ON/AFTER VIN #15107689, (1ST DSN 10448092))	5–E8,12
01	Y07 4–SPD A/TRANS (M30), A/C FRT AUTO/AUX CONT (CJ2), ACTIVE BRAKE CTL (JL4), TAIL & S/LP (T89) (EXPORT), (1ST DES)	10448091	1	1233.23	HARNESS, I/P WRG (1ST DSN USED B/4 VIN #15107689, (2ND DSN 10310783))	5–E8,12
01	Y07 6–SPD M/TRANS (MM6), A/C FRT AUTO/AUX CONT (CJ2), ACTIVE BRAKE CTL (JL4), TAIL & S/LP (T89) (EXPORT), (1ST DES)	10448092	1	1233.23	HARNESS, I/P WRG (1ST DSN USED B/4 VIN #15107689, (2ND DSN 10310784))	5–E8,12
01	Y67 4–SPD A/TRANS (M30), A/C FRT AUTO/AUX CONT (CJ2), TAIL & S/LP (T89) (EXPORT), (2ND DES)	10310791	1	1233.23	HARNESS, I/P WRG (2ND DSN USED ON/AFTER VIN #15107689, (1ST DSN 10448107))	5–E8,12
01	Y67 6–SPD M/TRANS (MM6), A/C FRT AUTO/AUX CONT (CJ2), TAIL & S/LP (T89) (EXPORT), (2ND DES)	10310792	1	1233.23	HARNESS, I/P WRG (2ND DSN USED ON/AFTER VIN #15107689, (1ST DSN 10448108))	5–E8,12
01	Y67 4–SPD A/TRANS (M30), A/C FRT AUTO/AUX CONT (CJ2), TAIL & S/LP (T89) (EXPORT), (1ST DES)	10448107	1	1233.23	HARNESS, I/P WRG (1ST DSN USED B/4 VIN #15107689, (2ND DSN 10310791))	5–E8,12
01	Y67 6–SPD M/TRANS (MM6), A/C FRT AUTO/AUX CONT (CJ2), TAIL & S/LP (T89) (EXPORT), (1ST DES)	10448108	1	1233.23	HARNESS, I/P WRG (1ST DSN USED B/4 VIN #15107689, (2ND DSN 10310792))	5–E8,12

cardiagn.com

2.480 HARNESS – WIRE, Chassis Wiring(Con't)

02	YY67 4–SPD A/TRANS (M30), A/C FRT AUTO/AUX CONT (CJ2), TAIL & S/LP (T89) (EXPORT)	10310791	1	1233.23	HARNESS, I/P WRG	5–E8,12
02	YY67 6–SPD M/TRANS (MM6), A/C FRT AUTO/AUX CONT (CJ2), TAIL & S/LP (T89) (EXPORT)	10310792	1	1233.23	HARNESS, I/P WRG	5–E8,12
02	Y07 4–SPD A/TRANS (M30), A/C FRT AUTO/AUX CONT (CJ2), TAIL & S/LP (T89) (EXPORT)	10310783	1	1233.23	HARNESS, I/P WRG	5–E8,12
02	Y07 6–SPD M/TRANS (MM6), A/C FRT AUTO/AUX CONT (CJ2), TAIL & S/LP (T89) (EXPORT)	10310784	1	1233.23	HARNESS, I/P WRG	5–E8,12
98	Y 6–SPD M/TRANS (MM6), CHASSIS, REALTIME DAMPING (F45), EUROPEAN PROVISIONS (VD1) (EXPORT), (EXC FRT ABS BRAKE LOC (JAG)	12189908	1	628.00	HARNESS, TRANS WRG (AC–DELCO #12189908)	3–J13,6
98	Y 6–SPD M/TRANS (MM6), EUROPEAN PROVISIONS (VD1) (EXPORT), (EXC CHASSIS, REALTIME DAMPING (F45), FRT ABS BRAKE LOC (JAG)	12189909	1	425.00	HARNESS, TRANS WRG (AC–DELCO #12189909)	3–J13,6
98	Y 6–SPD M/TRANS (MM6), CHASSIS, REALTIME DAMPING (F45), FRT ABS BRAKE LOC (JAG), EUROPEAN PROVISIONS (VD1) (EXPORT)	12189912	1	543.43	HARNESS, TRANS WRG	3–G9,10
98	Y 6–SPD M/TRANS (MM6), FRT ABS BRAKE LOC (JAG), EUROPEAN PROVISIONS (VD1) (EXPORT), (EXC CHASSIS, REALTIME DAMPING (F45)	12189913	1	367.44	HARNESS, TRANS WRG	3–G9,10
99–00	Y 6–SPD M/TRANS (MM6), CHASSIS, REALTIME DAMPING (F45), EUROPEAN PROVISIONS (VD1) (EXPORT)	12189914	1	201.00	HARNESS, TRANS WRG (ENHANCE EVAP) (AC–DELCO #12189914)	3–G9,10
99–00	Y 6–SPD M/TRANS (MM6), EUROPEAN PROVISIONS (VD1) (EXPORT), (EXC CHASSIS, REALTIME DAMPING (F45)	12189915	1	254.00	HARNESS, TRANS WRG (ENHANCE EVAP) (AC–DELCO #12189915)	3–G9,10
01–02	Y 6–SPD M/TRANS (MM6), CHASSIS, REALTIME DAMPING (F45), EUROPEAN PROVISIONS (VD1) (EXPORT)	10448124	1		HARNESS, TRANS WRG (ENHANCE EVAP)	3–G18,10
01–02	Y 6–SPD M/TRANS (MM6), EUROPEAN PROVISIONS (VD1) (EXPORT), (EXC CHASSIS, REALTIME DAMPING (F45)	10448125	1		HARNESS, TRANS WRG (ENHANCE EVAP)	3–G18,10

cardiagn.com

2.483 BLOCK – BOLT – BRACKET – CONNECTOR – COVER – LABEL – PLATE – PULLER – SHIELD – STUD, Main Wiring Junction and Fuse Block

97	Y (EXC SIG & MKR LP (T90) (EXPORT)	15319558	1	198.90	BLOCK, ENG WRG HARN JUNC .	2–F15,10
98	Y (EXC CHASSIS, REALTIME DAMPING (F45), FRT ABS BRAKE LOC (JAG), SIG & MKR LP (T90) (EXPORT) ...	12161089	1	198.90	BLOCK, ENG WRG HARN JUNC .	2–F15,10
98	Y FRT ABS BRAKE LOC (JAG)	15329393	1	198.90	BLOCK, ENG WRG HARN JUNC .	2–F15,10
99	Y	15329393	1	198.90	BLOCK, ENG WRG HARN JUNC .	2–F15,10
00–02	Y	10443149	1		BLOCK, ENG WRG HARN JUNC (NOTE: DOES NOT INCL. COVER ASM–BAT 15328644)	2–F15,10
97	Y	12193838	1	206.04	BLOCK, I/P WRG HARN JUNC ..	2–F15,26
98	Y	12193838	1	206.04	BLOCK, I/P WRG HARN JUNC ..	2–F15,26
99–02	Y	10443148	1	206.04	BLOCK, I/P WRG HARN JUNC ..	2–F15,26
00	Y	25651470	1	3.33	BOLT, DA WRG HARN J/BLK BR (M6X1X24.5MM) (W/14.7X19.7MM CLIP)	
97–02	Y	12161064	1	3.33	BOLT, ENG WRG HARN J/BLK CVR (THUMB–SCREW)	2–G2,37
97–02	Y	12161064	1	3.33	BOLT, I/P WRG HARN ACSRY RLY & FUSE BLK CVR (THUMB–SCREW)	2–G2,37
97–02	Y	12176906	1	21.62	BRACKET, I/P WRG HARN J/BLK (MTG BRKT SHLD)	2–G2,38
97–00	Y	10417445	1	25.08	BRACKET, MULTIUSE RLY & FUSE	2–F15,24
01	Y (2ND DES)	10317346	1		BRACKET, MULTIUSE RLY & FUSE (2ND DSN USES VELCRO FASTENERS TO ATTACH BRACKET. 1ST DSN SEE P/N 10417445.)	2–F15,24
01	Y (1ST DES)	10417445	1	25.08	BRACKET, MULTIUSE RLY & FUSE (1ST DSN USES RUBBER CAM LOCK FASTENERS TO ATTACH BRACKET. 2ND DSN SEE P/N 10317346)	2–F15,24
02	Y	10317346	1		BRACKET, MULTIUSE RLY & FUSE	2–F15,24
02	Y	10417445	1	25.08	BRACKET, MULTIUSE RLY & FUSE	2–F15,24
97	Y	12102616	1	14.89	CONNECTOR, BLK–ACSRY WRG JUNC (2–WAY F) (W/LEADS) (02.530) (AC–DELCO #PT303)	
97–98	Y	12126486	1	61.98	CONNECTOR, BLK–ACSRY WRG JUNC (3–WAY F FLEX LOCK W/LEADS) (02.694) (AC–DELCO #PT756)	
97–98	Y	12129490	1	2.35	CONNECTOR, BLK–ACSRY WRG JUNC (3–WAY M, W/O LEADS) (CLIP SLOT) (13.100)	
02	Y CHASSIS, REALTIME DAMPING (F45)	15305928	1	33.42	CONNECTOR, BLK–ACSRY WRG JUNC (BLACK) (2–WAY F, MAXI F . SE, W/LEADS) (02.530) (A . –DELCO #PT1187)	2–F15,26
99–00	Y	15303514	1	5.53	CONNECTOR, BLK–ENG WRG JUNC (BROWN) (68–WAY F, M/P 280 FLYLK, W/O LEADS) (02.530)	
99	Y37 (EXC ACTIVE BRAKE CTL (JL4), P/S (VARIABLE) (NV7), FRT FOG LP (T96) ..	15303512	1	5.53	CONNECTOR, BLK–ENG WRG JUNC (GRAY) (68–WAY F W/O LEADS) (02.530)	

cardiagn.com

2.483 BLOCK – BOLT – BRACKET – CONNECTOR – COVER – LABEL – PLATE – PULLER – SHIELD – STUD, Main Wiring Junction and Fuse Block (Con't)

00	Y	15303512	1	5.53	CONNECTOR, BLK–ENG WRG JUNC (GRAY) (68–WAY F W/O LEADS) (02.530)	
00	Y	15303513	1	5.53	CONNECTOR, BLK–ENG WRG JUNC (FRT) (BLACK) (68–WAY F M/P 280 FLXLK W/O LEADS) (02.530)	
97–00	Y	12177206	1	5.71	CONNECTOR, BLK–I/P WRG JUNC (BLACK) (68–WAY F, M/P 280 FLXLK, W/O LEADS) (02.530)	2–F15,26
97–00	Y	12177207	1	5.71	CONNECTOR, BLK–I/P WRG JUNC (GRAY) (68–WAY F, M/P 280 FLXLK, W/O LEADS) (02.530)	2–F15,26
99–00	Y	15305886	1	20.91	CONNECTOR, BLK–I/P WRG JUNC (GRAY) (2–WAY F MAXI FUSE CONN W/LEADS) (02.530) (AC–DELCO #PT1028)	2–F15,26
99–00	Y	15305920	1	33.42	CONNECTOR, BLK–I/P WRG JUNC (GREEN) (2–WAY F W/LEADS) (02.530) (AC–DELCO #PT1169)	2–F15,26
99–00	Y	15305951	1	20.91	CONNECTOR, BLK–I/P WRG JUNC (2–WAY F MAXI FUSE W/LEADS) (02.530) (AC–DELCO #PT1190)	2–F15,26
00	Y	12177205	1	5.71	CONNECTOR, BLK–I/P WRG JUNC (68–WAY F, M/P 280 FLXLK, W/O LEADS, GRAY) (02.530)	2–F15,26
00–02	Y	15305928	1	33.42	CONNECTOR, BLK–I/P WRG JUNC (BLACK) (2–WAY F, MAXI FUSE, W/LEADS) (02.530) (AC–DELCO #PT1187)	2–F15,26
97–99	Y	12126446	2	60.39	CONNECTOR, FUSE–AUTO (2–WAY F, W/LEADS & COVER) (02.535)	
02	Y	12126446	2	60.39	CONNECTOR, FUSE–AUTO (2–WAY F, W/LEADS & COVER) (02.535)	
97–99	Y	12085491	8	17.40	CONNECTOR, INJR–FUEL (2–WAY F) (W/LEADS) (02.535) (AC–DELCO #PT113)	1–J17,512
00–02	Y 5.7G (LS1), 6–SPD M/TRANS (MM6), 4–SPD A/TRANS (M30)	12085491	8	17.40	CONNECTOR, INJR–FUEL (2–WAY F) (W/LEADS) (02.535) (AC–DELCO #PT113)	1–J17,512
01–02	Y 5.7S (LS6)	12085491	8	17.40	CONNECTOR, INJR–FUEL (2–WAY F) (W/LEADS) (02.535) (AC–DELCO #PT113)	1–J17,512
97–02	Y	15328643	1	8.65	COVER, ENG WRG HARN J/BLK (USED WITH B+ COVER 15328644)	2–G2,66
97–02	Y	12194040	1	25.47	COVER, I/P WRG HARN J/BLK	2–G2,44
97	Y07 (EXC SIG & MKR LP (T90) (EXPORT)	15319540	1	DISCON	LABEL, ENG WRG HARN ACSRY RLY & FUSE IDENT	
98–99	Y	12194082	1	.78	LABEL, ENG WRG HARN ACSRY RLY & FUSE IDENT	2–G2,63
00–02	Y	15328703	1	8.50	LABEL, ENG WRG HARN ACSRY RLY & FUSE IDENT	2–G2,63
97	Y	12176907	1	.78	LABEL, FUSE BLK IDENT	2–G2,2

© 2001 GENERAL MOTORS SERVICE PARTS OPERATIONS–CHEVROLET–15Y

cardiagn.com

2.483 BLOCK – BOLT – BRACKET – CONNECTOR – COVER – LABEL – PLATE – PULLER – SHIELD – STUD, Main Wiring Junction and Fuse Block (Con't)

98	Y	12194083	1	.78	LABEL, FUSE BLK IDENT	2–G2,2
99–02	Y	15319414	1	.78	LABEL, FUSE BLK IDENT	2–G2,2
97	Y	10135646	2	3.33	PLATE, MULTIUSE RLY BRKT STUD (M6 X 1 X 24) (01.271)	2–F15,7
97–02	Y	10402723	1	3.33	PLATE, MULTIUSE RLY BRKT STUD (BRACKET REPLACES CENTER–MOST OF THE THREE SIMILAR BRACKETS ON THE PASSENGER SIDE OF DASHBOARD & BOTH BRACKETS ON DRIVER SIDE OF DASHBOARD) (03.162)	2–F15,27
97–00	Y	14058658	1	3.45	PLATE, MULTIUSE RLY BRKT STUD (BRACKET REPLACES THE TWO OUTBOARD OF THE THREE SIMILAR BRACKETS ON THE PASSENGER SIDE OF DASHBOARD) (12.986)	2–F15,27
01–02	Y	14058658	2	3.45	PLATE, MULTIUSE RLY BRKT STUD (12.986)	2–F15,27
97	Y SIG & MKR LP (T90) (EXPORT)	12084791	1	.56	PULLER, FUSE (MINI) (I/P COVER)	2–G2,56
97	Y (EXC SIG & MKR LP (T90) (EXPORT)	12193790	1	.56	PULLER, FUSE (ENG & MULTI J/BLK)	2–G2,56
98–99	Y	12084791	1	.56	PULLER, FUSE (MINI) (I/P COVER)	2–G2,56
00–02	Y	12193790	1	.56	PULLER, FUSE (ENG & MULTI J/BLK)	2–G2,56
97–02	Y	15319658	1	17.03	SHIELD, ENG WRG HARN J/BLK	2–G2,61
97–02	Y	10135646	2	3.33	STUD, ENG WRG HARN J/BLK (M6 X 1 X 24) (01.271)	2–F15,7
98–02	Y	10135646	2	3.33	STUD, MULTIUSE RLY BRKT (ANC PLT) (M6 X 1 X 24) (01.271)	2–F15,7
	EXPORT	*EXPORT*	*EXPORT*	*EXPORT*	*EXPORT*	*EXPORT*
97	Y SIG & MKR LP (T90) (EXPORT)	12161089	1	198.90	BLOCK, ENG WRG HARN JUNC	2–F15,10
97	Y07 SIG & MKR LP (T90) (EXPORT)	12176792	1	1.09	LABEL, ENG WRG HARN ACSRY RLY & FUSE IDENT	2–G2,63

2.485 CONNECTOR – MODULE – RELAY – SENSOR – SWITCH, Capsule/Headlamp/Fog Lamp

97	Y	12101873	1	33.66	CONNECTOR, MDL–DAYTIME RUNNING LP CONT (BLUE) (8–WAY F) (W/LEADS) (02.535) (AC–DELCO #PT266)	5–F2,21
97–98	Y07	15306189	1	42.09	CONNECTOR, MDL–DAYTIME RUNNING LP CONT (BLACK) (8–WAY F) (W/LEADS, 7–12GA & 4–18GA AS REQ) (02.535) (AC–DELCO #PT1316)	5–F2,21
98	Y07	12101875	1	[illegible]	CONNECTOR, MDL–DAYTIME RUNNING LP CONT (BLUE) (8–WAY F) (W/LEADS) (02.535) (AC–DELCO #PT266)	5–F2,21

cardiagn.com

2.485 CONNECTOR – MODULE – RELAY – SENSOR – SWITCH, Capsule/Headlamp/Fog Lamp (Con't)

01–02	YY67 6–SPD M/TRANS (MM6), A/C MAN CONT (C60), (EXC T&T WHL (N37)	15306189	1	42.09	CONNECTOR, MDL–DAYTIME RUNNING LP CONT (8–WAY FEMALE M/P 280 (W/LEADS) (INSTALL LEADS AS DESIRED) .) (BLACK) (8–WAY F W/LEADS, 7–12GA & 4–18GA AS REQ) (02.535) (AC–DELCO #PT1346) .	5–F2,21
97–02	Y	12102775	1	31.62	CONNECTOR, MDL–HDLP CONT (5–WAY F, W/LEADS) (02.760) (AC–DELCO #PT284)	2–G17,7
97–02	Y	12102776	1	31.62	CONNECTOR, MDL–HDLP CONT (4–WAY F, W/LEADS) (02.170) (AC–DELCO #PT402)	2–G17,7
97–00	Y	12085535	1	18.01	CONNECTOR, SEN–DAYTIME RUNNING LP AMB LGT (2–WAY F W/LEADS W/INDEX TAB OTR EDGE OF CAVITY B) (02.535) (AC–DELCO #PT146)	5–F2,25
97–02	Y	12101874	1	43.35	CONNECTOR, SW–FOG LP (02.535) (AC–DELCO #PT265)	5–F2,20
02	YY67 4–SPD A/TRANS (M30), A/C FRT AUTO/AUX CONT (CJ2), T&T WHL (N37), (EXC TAIL & S/LP (T89) (EXPORT)	12101874	1	43.35	CONNECTOR, SW–FOG LP (02.535) (AC–DELCO #PT265)	5–F2,20
97–98	Y CANADIAN (Z49)	10407669	1	81.85	MODULE, HDLP AUTO CONT ...	2–G17,12
97–02	Y	12077866	2	23.80	RELAY, DAYTIME RUNNING LP (BLACK) (5–WAY) (MICRO) (09.277) (AC–DELCO #15–5671)	2–G2,39
97–02	Y	12088567	1	16.45	RELAY, FOG LP (GRAY) (4–WAY) (09.277) (AC–DELCO #15–8571)	2–G2,51
97–98	Y CANADIAN (Z49)	10261143	1	12.33	SENSOR, DAYTIME RUNNING LP AMB LGT	2–G17,11
99–02	Y AUTO HDLP CONT (T82), CANADIAN (Z49)	12450121	1	11.49	SENSOR, DAYTIME RUNNING LP AMB LGT	2–G17,11
97–02	Y FRT FOG LP (T96), (EXC EUROPEAN PROVISIONS (VD1) (EXPORT)	12135155	1	43.07	SWITCH, FOG LP (INCLUDES HATCH RELEASE SWITCH) ...	5–F2,20
97–98	Y	26075870	1	213.71	SWITCH, HDLP & T/SIG & CRCONT (W/ LVR) (AC–DELCO #D1512G)	2–K7,16
99–02	Y	26075870	1	213.71	SWITCH, HDLP & T/SIG & CRCONT (W/ LVR) (AC–DELCO #D1512G)	2–K7,16
	*EXPORT****************EXPORT****************EXPORT****************EXPORT****************EXPORT*					
97–02	Y EUROPEAN PROVISIONS (VD1) (EXPORT)	12135156	1	43.07	SWITCH, FOG LP	5–F2,20

2.490 KNOB – RELAY – SWITCH, Instrument Panel/Interior Lamp Switch

97–02	Y	12198636	1	4.50	KNOB, I/P & INTR LP D/SW	5–G2,43
97–02	Y	12088567	1	16.45	RELAY, DISPLAY ILLUM CONT MDL (GRAY) (4–WAY) (09.277) (AC–DELCO #15–8571)	2–G2,40
97–01	Y	12135149	1	70.71	SWITCH, I/P LP DIMR (AC–DELCO #D1577E)	5–F6,36
02	Y (EXC HEAD UP DISPLAY (UV6)	12135149	1	70.71	SWITCH, I/P LP DIMR (AC–DELCO #D1577E)	5–F6,36

cardiagn.com

2.500 ATTACHMENT KIT – REGULATOR KIT, Voltage Regulator

97–00	Y	12533440	1	15.79	ATTACHMENT KIT, VOLTAGE REG (INCLS NUTS (5), SCREWS (2), WASHERS (2), SHAFT NUTS (2) (02.277)	2–F5,4
01–02	Y	12533440	1	15.79	ATTACHMENT KIT, VOLTAGE REG (INCLS NUTS (5), SCREWS (2), WASHERS (2), SHAFT NUTS (2) (02.277)	2–F5,4
97–99	Y	12533439	1	100.14	REGULATOR KIT, VOLTAGE (INCLS REGULATOR, NUTS (2), SCREWS (2) (AC–DELCO #D614A)	2–F5,3
00	Y 6–SPD M/TRANS (MM6)	12533439	1	100.14	REGULATOR KIT, VOLTAGE (INCLS REGULATOR, NUTS (2), SCREWS (2) (AC–DELCO #D614A)	2–F5,3
01–02	Y	12533439	1	100.14	REGULATOR KIT, VOLTAGE (INCLS REGULATOR, NUTS (2), SCREWS (2) (AC–DELCO #D614A)	2–F5,3

2.510 DIODE – RELAY, Voltage and Glow Plug

97	Y07	12126478	1	27.00	DIODE, A/C CMPR (W/LEADS) (09.170) (AC–DELCO #PT748)	
99–00	Y37 (EXC LP GRP (TR9)	12126478	1	27.00	DIODE, A/C CMPR (W/LEADS) (09.170) (AC–DELCO #PT748)	
98–02	Y	12088567	1	16.45	RELAY, ACSRY (RETAINED POWER) (GRAY) (4–WAY) (09.277) (AC–DELCO #15–8571)	
99–02	Y	12088567	2	16.45	RELAY, ACSRY TIME DELAY CUTOFF (GRAY) (4–WAY) (09.277) (AC–DELCO #15–8571)	
97–02	Y	12193604	1	23.80	RELAY, IGN (GRAY) (SPST 280 MINI) (4–TERMINAL) (09.778) (AC–DELCO #15–8733)	2–G2,53

2.525 HARNESS, Engine Wiring

97	Y 4–SPD A/TRANS (M30)	12163328	1	1043.42	HARNESS, ENG WRG	2–F15,14
97	Y 6–SPD M/TRANS (MM6)	12163330	1	1043.42	HARNESS, ENG WRG	2–F15,14
98	Y 4–SPD A/TRANS (M30), (EXC FRT ABS BRAKE LOC (JAG)	12163328	1	1043.42	HARNESS, ENG WRG	2–F15,14
98	Y 6–SPD M/TRANS (MM6), (EXC FRT ABS BRAKE LOC (JAG), EUROPEAN PROVISIONS (VD1) (EXPORT)	12163330	1	1043.42	HARNESS, ENG WRG	2–F15,14
98	Y 4–SPD A/TRANS (M30), FRT ABS BRAKE LOC (JAG)	12163794	1	1043.42	HARNESS, ENG WRG	2–F15,14
98	Y 6–SPD M/TRANS (MM6), FRT ABS BRAKE LOC (JAG), (EXC EUROPEAN PROVISIONS (VD1) (EXPORT)	12163795	1	1023.12	HARNESS, ENG WRG	2–F15,14

cardiagn.com

2.525 HARNESS, Engine Wiring (Con't)

99–00	Y 6–SPD M/TRANS (MM6), (EXC EUROPEAN PROVISIONS (VD1) (EXPORT)	12189523	1	1043.42	HARNESS, ENG WRG	2–F15,14
99–00	Y 4–SPD A/TRANS (M30) ...	12189524	1	1043.42	HARNESS, ENG WRG	2–F15,14
01–02	Y 4–SPD A/TRANS (M30) ...	15329389	1	1043.42	HARNESS, ENG WRG	2–F15,14
01–02	Y 6–SPD M/TRANS (MM6) ..	15329391	1	1043.42	HARNESS, ENG WRG	2–F15,14
01–02	Y37 5.7S (LS6), MANUAL 6 SPD O/D TRANS, TREMEC (M12)	15329391	1	1043.42	HARNESS, ENG WRG	2–F15,14
02	YY37	15329391	1	1043.42	HARNESS, ENG WRG	2–F15,14
	*EXPORT**********EXPORT**********EXPORT**********EXPORT**********EXPORT*					
98	Y 6–SPD M/TRANS (MM6), FRT ABS BRAKE LOC (JAG), EUROPEAN PROVISIONS (VD1) (EXPORT)	12189910	1	1043.42	HARNESS, ENG WRG	2–F15,14
99–00	Y 6–SPD M/TRANS (MM6), EUROPEAN PROVISIONS (VD1) (EXPORT)	12189911	1	1043.42	HARNESS, ENG WRG (ENHANCE EVAP EMISS)	2–F15,14

2.530 CONNECTOR – COVER – INSULATOR – PLUG – SEAL, Chassis Electrical

97–02	Y	15305291	1	1.48	CONNECTOR, GND–BUS BAR (12 WAY F GT–280, W/O UPR CONN/CVR, W/0 LEADS, MATES W/15305292 CONN/CVR) (12–WAY F)	2–G17,37
97–02	Y	15305292	1	2.75	CONNECTOR, GND–BUS BAR (MATES WITH AND ACTS AS A CVR FOR 15305291)	2–G17,37
97–02	Y	15305294	2	1.48	CONNECTOR, GND–BUS BAR (12–WAY FEMALE BUS BAR. OFTEN USED W/15305300 UPR (COVER) .) (LOWER) (12–WAY FEMALE) (W/O LEADS)	2–G17,43
97–02	Y	15305300	2	2.75	CONNECTOR, GND–BUS BAR (USED AS COVER FOR 12–WAY BUS BAR 15305294.) (THIS IS A MALE CAP/BAR WHICH MATES TO 12–WAY FEMALE)	2–G17,43
98–02	YY67	12102561	1	11.89	CONNECTOR, GND–BUS BAR (1–WAY F, W/LEADS) (02.535) (AC–DELCO #PT230)	2–G17,43
99–00	Y	12167308	2	22.17	CONNECTOR, GND–BUS BAR (80–WAY F) (USE TERM 12084912 18 GA & TERM 12084913 20 GA) (03.670)	2–G17,43
01–02	YY07	12167133	1	12.95	CONNECTOR, GND–BUS BAR (1–WAY F) (W/LEADS) (M/P 630 SELF LK) (09.778) (AC–DELCO #PT798)	2–G17,43
01–02	YY67 6–WAY PWR P/SEAT ADJR (AG2), SPEAKER SYSTEM 6 (UZ6)	15305294	1	1.48	CONNECTOR, GND–BUS BAR (LOWER) (12–WAY FEMALE) (W/O LEADS)	2–G17,43
02	YY 4–SPD A/TRANS (M30), A/C FRT AUTO/AUX CONT (CJ2), T&T WHL (N37), (EXC TAIL & S/LP (T89) (EXPORT)	15305294	2	1.48	CONNECTOR, GND–BUS BAR (12–WAY FEMALE BUS BAR. OFTEN USED W/15305300 UPR (COVER)) (LOWER) (12–WAY FEMALE) (W/O LEADS)	2–G17,43

cardiagn.com

2.530 CONNECTOR – COVER – INSULATOR – PLUG – SEAL, Chassis Electrical (Con't)

97	Y CHASSIS, REALTIME DAMPING (F45)	12117025	4	22.50	CONNECTOR, INLINE-TO ELEK SUSP POSN SEN (BLACK) (3-WAY F) (W/LEADS) (02.383) (AC-DELCO #PT420)	4-E4,45
98	Y CHASSIS, REALTIME DAMPING (F45), FRT ABS BRAKE LOC (JAG)	12117025	4	22.50	CONNECTOR, INLINE-TO ELEK SUSP POSN SEN (BLACK) (3-WAY F) (W/LEADS) (02.383) (AC-DELCO #PT420)	4-E4,45
99-02	Y	12117025	4	22.50	CONNECTOR, INLINE-TO ELEK SUSP POSN SEN (BLACK) (3-WAY F) (W/LEADS) (02.383) (AC-DELCO #PT420)	4-E4,45
97-02	Y 5.7G (LS1), 6-SPD M/TRANS (MM6), 4-SPD A/TRANS (M30)	12102490	1	44.37	CONNECTOR, INLINE-TO ENG HARN (7-WAY M, W/LEADS) (AC-DELCO #PT281)	1-J8,267
97-98	Y	12125676	1	66.81	CONNECTOR, INLINE-TO ENG HARN (BLACK) (10-WAY F) (W/LEADS) (AC-DELCO #PT588)	2-F15,2
97-02	Y 5.7G (LS1), 6-SPD M/TRANS (MM6), 4-SPD A/TRANS (M30)	12160280	1	2.50	CONNECTOR, INLINE-TO ENG HARN (20-WAY F) (W/O LEADS)	2-F15,2
98-02	Y	12160542	1	2.50	CONNECTOR, INLINE-TO ENG HARN (20-WAY M, W/O LEADS)	3-J13,6
98-00	Y 5.7G (LS1), 6-SPD M/TRANS (MM6), 4-SPD A/TRANS (M30)	12167120	1	24.44	CONNECTOR, INLINE-TO ENG HARN (BLACK) (2-WAY M) (W/LEADS) (04.720) (AC-DELCO #PT786)	1-J17,533
01-02	Y 5.7S (LS6)	12102490	1	44.37	CONNECTOR, INLINE-TO ENG HARN (7-WAY M, W/LEADS) (AC-DELCO #PT281)	1-J8,267
01-02	Y 5.7G (LS1), 4-SPD A/TRANS (M30), (MN5)	12167120	1	24.44	CONNECTOR, INLINE-TO ENG HARN (BLACK) (2-WAY M) (W/LEADS) (04.720) (AC-DELCO #PT786)	1-J17,533
01-02	Y 5.7S (LS6)	12167120	1	24.44	CONNECTOR, INLINE-TO ENG HARN (BLACK) (2-WAY M) (W/LEADS) (04.720) (AC-DELCO #PT786)	1-J17,533
01-02	Y 5.7S (LS6), MANUAL 6 SPD O/D TRANS, TREMEC (M12)	12167120	1	24.44	CONNECTOR, INLINE-TO ENG HARN (BLACK) (2-WAY M) (W/LEADS) (04.720) (AC-DELCO #PT786)	1-J17,533
02	Y 5.7S (LS6), MANUAL 6 SPD O/D TRANS, TREMEC (M12)	12102490	1	44.37	CONNECTOR, INLINE-TO ENG HARN (7-WAY M, W/LEADS) (AC-DELCO #PT281)	1-J8,267
02	YY37	12160280	1	2.50	CONNECTOR, INLINE-TO ENG HARN (20-WAY F) (W/O LEADS)	2-F15,2
97-02	Y 5.7G (LS1), 6-SPD M/TRANS (MM6), 4-SPD A/TRANS (M30)	12125676	1	66.81	CONNECTOR, INLINE-TO F/TNK HARN (BLACK) (10-WAY F) (W/LEADS) (AC-DELCO #PT588)	2-F15,2
00-02	Y	12117025	RH	22.50	CONNECTOR, INLINE-TO F/TNK HARN (BLACK) (3-WAY F) (W/LEADS) (02.383) (AC-DELCO #PT420)	4-E4,45

cardiagn.com

2.530 CONNECTOR – COVER – INSULATOR – PLUG – SEAL, Chassis Electrical (Con't)

02	YY37	12101899	1	18.52	CONNECTOR, INLINE–TO F/TNK HARN (BLACK) (2–WAY F W/LEADS) (02.383) (AC–DELCO #PT169)	2–F15,2
97–98	Y	12102747	1	21.73	CONNECTOR, INLINE–TO FWD LP HARN (BLACK) (2–WAY F W/LEADS) (03.670) (AC–DELCO #PT374)	2–F15,2
97–02	Y (EXC SIG & MKR LP (T90) (EXPORT)	12117271	1	59.43	CONNECTOR, INLINE–TO FWD LP HARN (WHITE) (8–WAY F W/LEADS) (02.535) (AC–DELCO #PT444)	2–F15,2
98–02	Y	12125676	1	66.81	CONNECTOR, INLINE–TO FWD LP HARN (BLACK) (10–WAY F) (W/LEADS) (AC–DELCO #PT588)	2–F15,2
98–00	Y	12160280	1	2.50	CONNECTOR, INLINE–TO FWD LP HARN (20–WAY F) (W/O LEADS)	2–F15,2
99–00	Y07–67	12102747	1	21.73	CONNECTOR, INLINE–TO FWD LP HARN (BLACK) (2–WAY F W/LEADS) (03.670) (AC–DELCO #PT374)	2–F15,2
99–00	Y37 LP GRP (TR9)	12102747	1	21.73	CONNECTOR, INLINE–TO FWD LP HARN (BLACK) (2–WAY F W/LEADS) (03.670) (AC–DELCO #PT374)	2–F15,2
00	Y	12085669	1	23.52	CONNECTOR, INLINE–TO FWD LP HARN (1–WAY M) (W/LEAD) (BLACK) (AC–DELCO #PT1223)	2–F15,2
01–02	Y	12101899	1	18.52	CONNECTOR, INLINE–TO FWD LP HARN (BLACK) (2–WAY F W/LEADS) (02.383) (AC–DELCO #PT169)	2–F15,2
01–02	Y	12102747	1	21.73	CONNECTOR, INLINE–TO FWD LP HARN (BLACK) (2–WAY F W/LEADS) (03.670) (AC–DELCO #PT374)	2–F15,2
01–02	Y	15326842	1		CONNECTOR, INLINE–TO FWD LP HARN (10–WAY F) (13.100) ...	2–F15,2
01–02	Y	15326847	1		CONNECTOR, INLINE–TO FWD LP HARN (10–WAY M) (02.483) ..	2–F15,2
01–02	YY67	15306410	1	118.35	CONNECTOR, INLINE–TO FWD LP HARN (16–WAY FEMALE GT–150.) (16 WAY FEMALE) (AC–DELCO #PT1463)	2–F15,2
01–02	YY67 4–SPD A/TRANS (M30), A/C FRT AUTO/AUX CONT (CJ2), T&T WHL (N37), (EXC TAIL & S/LP (T89) (EXPORT)	15326286	1	3.33	CONNECTOR, INLINE–TO FWD LP HARN	2–F15,2
02	Y 6 SPD M/TRANS (MM6), 4–SPD A/TRANS (M30)	12101899	1	18.52	CONNECTOR, INLINE–TO FWD LP HARN (BLACK) (2–WAY F W/LEADS) (02.383) (AC–DELCO #PT169)	2–F15,2
02	YY37	12101899	1	18.52	CONNECTOR, INLINE–TO FWD LP HARN (BLACK) (2–WAY F W/LEADS) (02.383) (AC–DELCO #PT169)	2–F15,2

cardiagn.com

2.530 CONNECTOR – COVER – INSULATOR – PLUG – SEAL, Chassis Electrical (Con't)

01–02	Y	12102741	4	26.79	CONNECTOR, INLINE–TO HTD OXY SEN (4–WAY F) (W/LEADS, IN A ROW) (04.651) (AC–DELCO #PT368)	
97–02	Y	12101762	1	70.38	CONNECTOR, INLINE–TO I/P HARN (10–WAY F W/LEADS) (02.535) (AC–DELCO #PT150)	2–G17,15
97–02	Y	12101832	1	46.41	CONNECTOR, INLINE–TO I/P HARN (BLUE) (10–WAY F) (W/LEADS) (AC PT224) (02.535) (AC–DELCO #PT224)	3–J13,6
97–02	Y SPEAKER SYSTEM 6 (UZ6), MULTIPLE CD PLYR (U1S)	12102900	1	36.21	CONNECTOR, INLINE–TO I/P HARN (4–WAY F W/LEADS) (02.535) (AC–DELCO #PT382)	3–J13,6
97–98	Y	12117270	1	56.37	CONNECTOR, INLINE–TO I/P HARN (8–WAY M W/LEADS) (AC–DELCO #PT443)	3–J13,6
97	Y	12117371	1	25.70	CONNECTOR, INLINE–TO I/P HARN (3–WAY M W/LEADS) (AC–DELCO #PT504)	3–J13,6
97–02	Y 6–SPD M/TRANS (MM6), 4–SPD A/TRANS (M30)	12117372	1	72.69	CONNECTOR, INLINE–TO I/P HARN (BLACK) (10–WAY M) (AC–DELCO #PT505)	3–J13,6
97–00	Y	12160542	1	2.50	CONNECTOR, INLINE–TO I/P HARN (20–WAY M, W/O LEADS)	3–J13,6
97–02	Y	15305888	2	30.36	CONNECTOR, INLINE–TO I/P HARN (6–WAY F W/LEADS) (13.090) (AC–DELCO #PT1032)	3–J13,6
99	Y	12101822	1	33.42	CONNECTOR, INLINE–TO I/P HARN (GRAY) (8–WAY F) (W/LEADS) (02.535) (AC–DELCO #PT214)	3–J13,6
01–02	Y	15326847	1		CONNECTOR, INLINE–TO I/P HARN (10–WAY M) (02.483)	2–F15,2
01–02	YY	15306364	1	132.94	CONNECTOR, INLINE–TO I/P HARN (16–WAY MALE GT150 (W/ LEADS)) (AC–DELCO #PT1416)	5–H12,54
02	Y O/S ELEC R/CON MIR (DD0), ELEC R/CON HTD MIR (DL8)	12101832	1	46.41	CONNECTOR, INLINE–TO I/P HARN (BLUE) (10–WAY F) (W/LEADS) (AC PT224) (02.535) (AC–DELCO #PT224)	3–J13,6
02	Y O/S ELEC R/CON MIR (DD0), ELEC R/CON HTD MIR (DL8)	15305888	2	30.36	CONNECTOR, INLINE–TO I/P HARN (6–WAY F W/LEADS) (13.090) (AC–DELCO #PT1032)	3–J13,6
02	YY37	12117372	1	72.69	CONNECTOR, INLINE–TO I/P HARN (BLACK) (10–WAY M) (AC–DELCO #PT505)	3–J13,6
97–00	Y 5.7G (LS1)	12102747	1	21.73	CONNECTOR, INLINE–TO KNOCK SEN (BLACK) (2–WAY F W/LEADS) (03.670) (AC–DELCO #PT374)	2–F15,2
01–02	Y	12085495	1	27.30	CONNECTOR, INLINE–TO KNOCK SEN (BLACK) (3–WAY F) (W/LEADS) (02.535) (AC–DELCO #PT117)	1–J17,514

© 2001 GENERAL MOTORS SERVICE PARTS OPERATIONS–CHEVROLET–15Y

cardiagn.com

97–02	Y	12102747	1	21.73	CONNECTOR, INLINE–TO P/S ASST MOT (BLACK) (2–WAY F W/LEADS) (03.670) (AC–DELCO #PT374)	2–F15,2
97–02	Y	12085536	1	29.85	CONNECTOR, INLINE–TO STRG COL HARN (BLACK) (4–WAY M) (W/LEADS) (02.535) (AC–DELCO #PT144)	2–K7,13
97–02	Y	12092248	1	1.73	CONNECTOR, INLINE–TO STRG COL HARN (23–WAY M) (W/O LEADS)	2–K7,13
97–02	Y	12125678	1	35.19	CONNECTOR, INLINE–TO STRG COL HARN (6–WAY F, W/LEADS) (09.172) (AC–DELCO #PT590)	2–K7,13
98–02	Y	12085206	1	16.38	CONNECTOR, INLINE–TO STRG COL HARN (BLACK) (4–WAY M) (02.535)	2–K7,13
98–02	Y	15305872	1	33.15	CONNECTOR, INLINE–TO STRG COL HARN (RR) (BLACK) (6–WAY M W/LEADS) (13.100) (AC–DELCO #PT1013)	2–K7,13
99–02	Y	12085535	1	18.01	CONNECTOR, INLINE–TO STRG COL HARN (TO TELESCOPING MOTOR) (2–WAY F W/LEADS W/INDEX TAB OTR EDGE OF CAVITY B) (02.535) (AC–DELCO #PT146)	2–K7,13
99–02	Y07–67	12101864	1	18.16	CONNECTOR, INLINE–TO STRG COL HARN (BLACK) (3–WAY F W/LEADS) (02 535) (AC–DELCO #PT256)	2–K7,13
99–02	Y07–67	12117322	1	22.64	CONNECTOR, INLINE–TO STRG COL HARN (3–WAY M) (09.709) (AC–DELCO #PT455)	2–K7,13
02	YY67 4–SPD A/TRANS (M30), A/C FRT AUTO/AUX CONT (CJ2), T&T WHL (N37), (EXC TAIL & S/LP (T89) (EXPORT)	12085535	1	18.01	CONNECTOR, INLINE–TO STRG COL HARN (TO TELESCOPING MOTOR) (2–WAY F W/LEADS W/INDEX TAB OTR EDGE OF CAVITY B) (02.535) (AC–DELCO #PT146)	2–K7,13
02	YY67 4–SPD A/TRANS (M30), A/C FRT AUTO/AUX CONT (CJ2), T&T WHL (N37), (EXC TAIL & S/LP (T89) (EXPORT)	12085536	1	29.85	CONNECTOR, INLINE–TO STRG COL HARN (BLACK) (4–WAY M) (W/LEADS) (02.535) (AC–DELCO #PT144)	2–K7,13
02	YY67 4–SPD A/TRANS (M30), A/C FRT AUTO/AUX CONT (CJ2), T&T WHL (N37), (EXC TAIL & S/LP (T89) (EXPORT)	12092248	1	1.73	CONNECTOR, INLINE–TO STRG COL HARN (23–WAY M) (W/O LEADS)	2–K7,13
02	YY67 4–SPD A/TRANS (M30), A/C FRT AUTO/AUX CONT (CJ2), T&T WHL (N37), (EXC TAIL & S/LP (T89) (EXPORT)	12101864	1	18.16	CONNECTOR, INLINE–TO STRG COL HARN (BLACK) (3–WAY F W/LEADS) (02.535) (AC–DELCO #PT256)	2–K7,13
02	YY67 4–SPD A/TRANS (M30), A/C FRT AUTO/AUX CONT (CJ2), T&T WHL (N37), (EXC TAIL & S/LP (T89) (EXPORT)	12117322	1	22.64	CONNECTOR, INLINE–TO STRG COL HARN (3–WAY M) (09.709) (AC–DELCO #PT455)	2–K7,13

cardiagn.com

02	YY67	12125678	1	35.19	CONNECTOR, INLINE–TO STRG COL HARN (6–WAY F, W/LEADS) (09.172) (AC–DELCO #PT590)	2–K7,13
02	YY87 4–SPD A/TRANS (M30), A/C FRT AUTO/AUX CONT (CJ2), T&T WHL (N37), (EXC TAIL & S/LP (T89) (EXPORT)	15305872	1	33.15	CONNECTOR, INLINE–TO STRG COL HARN (RR) (BLACK) (6–WAY M W/LEADS) (13.100) (AC–DELCO #PT1013)	2–K7,13
97–02	Y	12117270	1	56.37	CONNECTOR, INLINE–TO TRANS (8–WAY M W/LEADS) (AC–DELCO #PT443)	3–J13,6
97–99	Y	12160493	1	15.30	CONNECTOR, INLINE–TO TRANS (14–WAY F) (W/O LEADS) (M/P 100W) (04.115) (CAN ALSO REPL 13–WAY CONN)	3–J13,6
97–02	Y 6–SPD M/TRANS (MM6), 4–SPD A/TRANS (M30)	12160542	1	2.50	CONNECTOR, INLINE–TO TRANS (20–WAY M, W/O LEADS)	3–J13,6
97	Y 4–SPD A/TRANS (M30)	12160782	1	5.61	CONNECTOR, INLINE–TO TRANS (20–WAY M)	
97–01	Y	15305867	1	78.54	CONNECTOR, INLINE–TO TRANS (14–WAY F) (W/LEADS) (ACTUALLY 20–WAY W/6 CAVITIES MOLDED) (AC–DELCO #PT1008)	3–J13,6
98–99	Y	12085485	1	18.67	CONNECTOR, INLINE–TO TRANS (BLACK) (2–WAY M; (W/LEADS) (02.535) (AC–DELCO #PT107)	3–J13,6
98	Y67	12160280	2	2.50	CONNECTOR, INLINE–TO TRANS (20–WAY F) (W/O LEADS)	2–F15,2
99–02	Y	12117372	1	72.69	CONNECTOR, INLINE–TO TRANS (BLACK) (10–WAY M) (AC–DELCO #PT505)	3–J13,6
99–00	Y	12125676	1	66.81	CONNECTOR, INLINE–TO TRANS (BLACK) (10–WAY F) (W/LEADS) (AC–DELCO #PT588)	2–F15,2
97–00	Y	12117372	1	72.69	CONNECTOR, INLINE–TO TRANS HARN (BLACK) (10–WAY M) (AC–DELCO #PT505)	3–J13,6
97–00	Y	12125675	1	69.87	CONNECTOR, INLINE–TO TRANS HARN (GRAY) (10–WAY F) (W/LEADS) (AC–DELCO #PT587)	
97–98	Y	12160280	1	2.50	CONNECTOR, INLINE–TO TRANS HARN (20–WAY F) (W/O LEADS)	2–F15,2
97–98	Y	12162343	2	.58	CONNECTOR, INLINE–TO TRANS HARN (2–WAY M W/O LEADS) (04.720)	3–G6,29
98	Y	12125676	1	66.81	CONNECTOR, INLINE–TO TRANS HARN (BLACK) (10–WAY F) (W/LEADS) (AC–DELCO #PT588)	2–F15,2
98	Y	12160542	1	2.50	CONNECTOR, INLINE–TO TRANS HARN (20–WAY M, W/O LEADS)	3–J13,6
99–02	Y	12162343	1	.58	CONNECTOR, INLINE–TO TRANS HARN (2–WAY M W/O LEADS) (04.720)	3–G6,29
01–02	YY	15326842	1		CONNECTOR, INLINE–TO TRANS HARN (10–WAY F) (13.100)	2–F15,2

cardiagn.com

2.530 CONNECTOR – COVER – INSULATOR – PLUG – SEAL, Chassis Electrical (Con't)

01–02	YY07–67	15326847	1		CONNECTOR, INLINE–TO TRANS HARN (10–WAY M) (02.483)	2–F15,2
97–99	Y	12177205	1	5.71	CONNECTOR, PWR DISTR BLK (68–WAY F, M/P 280 FLXLK, W/O LEADS, GRAY)	2–G10,45
97–98	Y	12177206	1	5.71	CONNECTOR, PWR DISTR BLK (RR) (BLACK) (68–WAY F, M/P 280 FLXLK, W/O LEADS)	2–G2,46
97–98	Y	12177207	1	5.71	CONNECTOR, PWR DISTR BLK (GRAY) (68–WAY F, M/P 280 FLXLK, W/O LEADS)	2–G2,45
97–02	Y	15303512	1	5.53	CONNECTOR, PWR DISTR BLK (GRAY) (68–WAY F W/O LEADS)	2–G2,62
97–99	Y	15303513	1	5.53	CONNECTOR, PWR DISTR BLK (FRT) (BLACK) (68–WAY F M/P 280 FLXLK W/O LEADS)	2–G2,21
97–98	Y	15303514	1	5.53	CONNECTOR, PWR DISTR BLK (BROWN) (68–WAY F, M/P 280 FLYLK, W/O LEADS)	2–G2,3
97–98	Y	15305886	1	20.91	CONNECTOR, PWR DISTR BLK (GRAY) (2–WAY F MAXI FUSE CONN W/LEADS) (AC–DELCO #PT1028)	2–G2,3
97–99	Y	15305920	1	33.42	CONNECTOR, PWR DISTR BLK (GREEN) (2–WAY F W/LEADS) (AC–DELCO #PT1169)	2–G2,3
98	Y	15305928	1	33.42	CONNECTOR, PWR DISTR BLK (BLACK) (2–WAY F, MAXI FUSE, W/LEADS) (AC–DELCO #PT1187)	
98–99	Y	15305951	1	20.91	CONNECTOR, PWR DISTR BLK (2–WAY F MAXI FUSE W/LEADS) (AC–DELCO #PT1190)	
01–02	Y	12177205	1	5.71	CONNECTOR, PWR DISTR BLK (68–WAY F, M/P 280 FLXLK, W/O LEADS, GRAY)	2–G10,45
01–02	Y	15303513	1	5.53	CONNECTOR, PWR DISTR BLK (FRT) (BLACK) (68–WAY F M/P 280 FLXLK W/O LEADS)	2–G2,21
01–02	YY	15328719	1	5.53	CONNECTOR, PWR DISTR BLK (68–WAY FEMALE M/P 280 FLXLK T3 (W/O LEADS) .) (GRAY) (68–WAY FEMALE M/P 280 FLXLK T3 W/O LEADS) (13.100)	
01–02	YY67	12177206	1	5.71	CONNECTOR, PWR DISTR BLK (68–WAY FEMALE M/P 280 FLXLK (W/O LEADS) (BLACK) .) (BLACK) (68–WAY F, M/P 280 FLXLK, W/O LEADS)	2–G2,46
01–02	YY67	12177207	1	5.71	CONNECTOR, PWR DISTR BLK (68–WAY FEMALE M/P 280 FLXLK (W/O LEADS) (GRAY) .) (GRAY) (68–WAY F, M/P 280 FLXLK, W/O LEADS)	2–G2,45
01–02	YY67	15305886	1	20.91	CONNECTOR, PWR DISTR BLK (2–WAY FEMALE MAX 1 FUSE CONN (W/LEADS) GRAY) (GRAY) (2–WAY F MAXI FUSE CONN W/LEADS) (AC–DELCO #PT1028)	2–G2,3

cardiagn.com

01–02	YY67	15305920	1	33.42	CONNECTOR, PWR DISTR BLK (2–WAY FEMALE MAX 1 FUSE CONN (W/LEADS) .) (GREEN) (2–WAY F W/LEADS) (AC–DELCO #PT1169)	2–G2,3
01–02	YY67	15305951	1	20.91	CONNECTOR, PWR DISTR BLK (2–WAY FEMALE ' 'AX1–FUSE CONNECTOR (W/LEADS)) (2–WAY F MAXI FUSE W/LEADS) (AC–DELCO #PT1190)	
97	Y 4–SPD A/TRANS (M30) ...	12162201	1	.58	CONNECTOR, SOL–A SHFT VLV (NATURAL) (2–WAY F) (W/O LEADS)	
99–02	Y	12101857	1	19.28	CONNECTOR, SOL–A SHFT VLV (WHITE) (2–WAY F, W/LEADS) (02.535) (AC–DELCO #PT249)	
97–02	Y	15305291	1	1.48	CONNECTOR, WRG HARN (12 WAY F GT–280, W/O UPR CONN/CVR, W/0 LEADS, MATES W/15305292 CONN/CVR) (12–WAY F)	2–G17,37
97–02	YY67	15305914	1	60.96	CONNECTOR, WRG HARN (12–WAY FEMALE GT 150 (W/LEADS) .) (12–WAY F) (W/LEADS AND CAP) (02.440) (AC–DELCO #PT1101)	2–G17,37
01–02	Y	15305292	1	2.75	CONNECTOR, WRG HARN	2–G17,37
02	YY67 4–SPD A/TRANS (M30), A/C FRT AUTO/AUX CONT (CJ2), T&T WHL (N37), (EXC TAIL & S/LP (T89) (EXPORT)	15305292	1	2.75	CONNECTOR, WRG HARN (ACTS AS A COVER FOR MATING PART 15305291.)	2–G17,37
02	YY67 4–SPD A/TRANS (M30), A/C FRT AUTO/AUX CONT (CJ2), T&T WHL (N37), (EXC TAIL & S/LP (T89) (EXPORT)	15305914	1	60.96	CONNECTOR, WRG HARN (12–WAY FEMALE GT 150 (W/LEADS) .) (12–WAY F) (W/LEADS AND CAP) (02.440) (AC–DELCO #PT1101)	2–G17,37
99–00	Y 6–SPD M/TRANS (MM6), 4–SPD A/TRANS (M30)	15305287	2	5.13	COVER, ENG WRG HARN ECM CONN	
97–02	Y	10156146	1	9.28	INSULATOR, ENG WRG HARN (THERMO SHLD)	2–G2,19
97–02	Y	12039168	2	3.33	PLUG, WRG HARN CONN (UNUSED CAV) (BLACK) (1–WAY M)	2–G17,37
02	YY07	12059168	1	3.33	PLUG, WRG HARN CONN (UNUSED CAV) (BLACK) (1–WAY M)	2–G17,37
02	YY37	12059168	14	3.33	PLUG, WRG HARN CONN (UNUSED CAV) (BLACK) (1–WAY M)	2–G17,37
97–99	Y	12167313	2	9.54	SEAL, WRG CONN	
	*EXPORT**********EXPORT**********EXPORT**********EXPORT**********EXPORT*					
02	YY07–67 SIG & MKR LP (T90) (EXPORT)	12117271	1	59.43	CONNECTOR, INLINE–TO FWD LP HARN (WHITE) (8–WAY F W/LEADS) (02.535) (AC–DELCO #PT444)	2–F15,2

cardiagn.com

2.530 CONNECTOR – COVER – INSULATOR – PLUG – SEAL, Chassis Electrical (Con't)

99	Y 6–SPD M/TRANS (MM6), EUROPEAN PROVISIONS (VD1) (EXPORT)	12160542	1	2.50	CONNECTOR, INLINE–TO TRANS HARN (20–WAY M, W/O LEADS)	3–J13,6
99	Y 6–SPD M/TRANS (MM6), CHASSIS, REALTIME DAMPING (F45), EUROPEAN PROVISIONS (VD1) (EXPORT)	15305928	1	33.42	CONNECTOR, PWR DISTR BLK (BLACK) (2–WAY F, MAXI FUSE, W/LEADS) (AC–DELCO #PT1187)	

2.559 BOLT – CAP – CLIP COVER – GASKET – RETAINER – SHIELD – SPACER – STRAP – STUD, Chassis/Engine Wiring Harness

00–02	Y	25638301	1	3.35	BOLT, I/P WRG HARN GND (W/O SENSORS) (14.865)	
97–98	Y (EXC LEADED FUEL EMIS EXPORT (NM8)	12555072	6	3.33	CLIP, OXY SEN LEAD	2–K17,22
00–02	Y	12561498	1	3.33	CLIP, SECD AIR INJN PMP WRG HARN	2–J9,20
00–02	Y67	8911943	1	3.33	GASKET, ENG WRG HARN GROM BKG PLT	
97–02	Y 6–SPD M/TRANS (MM6), 4–SPD A/TRANS (M30)	12176408	2	3.33	RETAINER, ECM WRG HARN CONN (BLUE) (RETAINS 40–WAY CONN)	
97–00	Y 4–SPD A/TRANS (M30), 6–SPD M/TRANS (MM6) ...	12176410	2	3.33	RETAINER, ECM WRG HARN CONN (RED) (RETAINS 40–WAY CONN)	
97–02	YY37	12176408	2	3.33	RETAINER, ECM WRG HARN CONN (BLUE) (RETAINS 40–WAY CONN)	
97–02	Y	12191068	1	3.33	RETAINER, THROT ACTR WRG HARN	
02	YY37	12191068	1	3.33	RETAINER, THROT ACTR WRG HARN	
00	Y	10260723	1	.48	SHIELD, OXY SEN WRG HARN HT .	
97–98	Y	26061964	1	8.55	SPACER, DA WRG HARN CDT ..	4–E24,3
99–02	Y07–67 (EXC T&T WHL (N37)	26061964	1	8.55	SPACER, DA WRG HARN CDT ..	4–E24,3
99–02	Y37	26061964	1	8.55	SPACER, DA WRG HARN CDT ..	4–E24,3
97	Y	26013823	2	DISCON	STRAP, WRG HARN	
97–98	Y	10278878	6	.29	STUD, WRG HARN GND	2–G2,13
99–00	Y (1ST DES)	10278878	6	.29	STUD, WRG HARN GND (1ST DSN STUD M6X1X25, FIN SH COPPER FLASH, 2ND DSN 11518182) ..	2–G2,13
99–00	Y (2ND DES)	11518182	6		STUD, WRG HARN GND (2ND DSN STUD–WELD M6X1X25, FINISH 6280, 1ST DSN 10278878)	2–G2,13
01–02	YY37–67 (1ST DES)	10278878	6	.29	STUD, WRG HARN GND (1ST DSN STUD M6X1X25, FINISH COPPER FLASH, 2ND DSN 11518182) ..	2–G2,13
01–02	YY37–67 (2ND DES)	11518182	6		STUD, WRG HARN GND (2ND DSN STUD–WELD M6X1X25, FINISH 6280, 1ST DSN 10278878)	2–G2,13

*EXPORT****************EXPORT****************EXPORT****************EXPORT****************EXPORT*

97–98	Y LEADED FUEL EMIS EXPORT (NM8)	12191286	2	3.33	CAP, OXY SEN WRG HARN CONN (2–WAY) (W/O LEADS)	2–K17,31
99–02	Y LEADED FUEL EXPORT EMIS (NM2)	12191286	2	3.33	CAP, OXY SEN WRG HARN CONN (2–WAY) (W/O LEADS)	–K17,31

cardiagn.com

99	Y JAPANESE EMISSION (NA3), EUROPEAN EMISSION (NA7), CALIF EMIS, TIER 1 (NB6), FED EMIS SYS (NF2)	12555072	6	3.33	CLIP, OXY SEN LEAD	2–K17,22
00	Y JAPANESE EMISSION (NA3), EUROPEAN EMISSION (NA7), CALIF EMIS LEV (NC1), FED EMIS SYS (NF2)	12555072	6	3.33	CLIP, OXY SEN LEAD	2–K17,22
01–02	Y JAPANESE EMISSION (NA3), CALIF EMIS LEV (NC1), FEDERAL EMIS NLEV (NF7), EMISSION SYSTEM, EEC 00 (NT3)	12555072	6	3.33	CLIP, OXY SEN LEAD	2–K17,22
97–98	Y LEADED FUEL EMIS EXPORT (NM8)	12124742	2	8.09	COVER, ENG WRG HARN	2–K17,30
99–02	Y LEADED FUEL EXPORT EMIS (NM2)	12124742	2	8.09	COVER, ENG WRG HARN	2–K17,30

2.560 CONNECTOR – MODULE, Body Multifunction Electric Computer

97–02	Y	12110244	1	6.58	CONNECTOR, MDL–BODY CONT (PINK) (24–WAY F W/O LEADS) (02.480)	2–F15,13
97–02	Y	12110245	1	6.58	CONNECTOR, MDL–BODY CONT (PINK) (32–WAY F) (02.480) ..	2–F15,13
97–02	Y	12110259	1	1.98	CONNECTOR, MDL–BODY CONT (TYPICALLY USES 20–22GA FEMALE TERM 12089660) (GREEN) (16–WAY F W/O LEADS) (02.195)	2–F15,13
02	YY67 4–SPD A/TRANS (M30), A/C FRT AUTO/AUX CONT (CJ2), T&T WHL (N37), (EXC TAIL & S/LP (T89) (EXPORT)	12110244	1	6.58	CONNECTOR, MDL–BODY CONT (PINK) (24–WAY F W/O LEADS) (02.480)	2–F15,13
02	YY67 4–SPD A/TRANS (M30), A/C FRT AUTO/AUX CONT (CJ2), T&T WHL (N37), (EXC TAIL & S/LP (T89) (EXPORT)	12110245	1	6.58	CONNECTOR, MDL–BODY CONT (PINK) (32–WAY F) (02.480) ..	2–F15,13
02	YY67 4–SPD A/TRANS (M30), A/C FRT AUTO/AUX CONT (CJ2), T&T WHL (N37), (EXC TAIL & S/LP (T89) (EXPORT)	12110259	1	1.98	CONNECTOR, MDL–BODY CONT (GREEN) (16–WAY F W/O LEADS) (02.195)	2–F15,13
97	Y	9381389	1	353.29	MODULE, BODY CONT (AC–DELCO #9381389)	2–F15,30
98	Y	9381929	1	372.91	MODULE, BODY CONT (AC–DELCO #9381929)	2–F15,30
99	Y	9381399	1	331.59	MODULE, BODY CONT (AC–DELCO #9381399)	2–F15,30
00	Y	10304930	1	331.59	MODULE, BODY CONT (AC–DELCO #10304930)	2–F15,30
01–02	Y	10304931	1	331.59	MODULE, BODY CONT (AC–DELCO #10304931)	2–F15,30

cardiagn.com

2.575 CONNECTOR – LAMP – PUSHBUTTON – SOCKET – SWITCH, Side Marker and Hazard Flasher

97–02	Y	12101762	1	70.38	CONNECTOR, SW–HAZARD WRNG (10–WAY F W/LEADS) (02.535) (AC–DELCO #PT150)	2–G17,15
97–02	Y	12101823	1	50.49	CONNECTOR, SW–HAZARD WRNG (10–WAY M W/LEADS) (02.535) (AC–DELCO #PT215)	2–G17,15
02	YY67	12101823	1	50.49	CONNECTOR, SW–HAZARD WRNG (10–WAY M W/LEADS) (02.535) (AC–DELCO #PT215)	2–G17,15
97–02	Y (EXC TAIL & S/LP (T89) (EXPORT)	16524722	2	10.60	LAMP, RR SI MKR (RED LENS)	2–H2,17
97–02	Y	10295550	1	3.45	PUSHBUTTON, HAZARD WRNG SW	2–G17,13
97–02	Y	12141388	2	37.50	SOCKET, FRT SI MKR LP (W/LEADS) (02.596) (AC–DELCO #LS44)	2–G17,19
97–02	Y	12141388	2	37.50	SOCKET, RR SI MKR LP (W/LEADS) (02.596) (AC–DELCO #LS44)	2–G17,19
97–02	Y (EXC EUROPEAN PROVISIONS (VD1) (EXPORT)	10406626	1	28.75	SWITCH, HAZARD WRNG	2–G17,14
	*EXPORT**********EXPORT**********EXPORT**********EXPORT**********EXPORT*					
97–02	Y SIG & MKR LP (T90) (EXPORT)	16523527	LH	15.75	LAMP, FRT MKR (POLYCARBONATE)	2–G17,28
97–02	Y SIG & MKR LP (T90) (EXPORT)	16523528	RH	15.75	LAMP, FRT MKR (POLYCARBONATE)	2–G17,28
97–02	Y TAIL & S/LP (T89) (EXPORT)	5978259	2	10.60	LAMP, RR SI MKR (AMBER LENS)	2–H2,17
97–02	Y EUROPEAN PROVISIONS (VD1) (EXPORT)	10406627	1	28.75	SWITCH, HAZARD WRNG	2–G17,14

2.585 LAMP, Parking, Turn Signal & Cornering & Daytime Running

97–02	Y (EXC SIG & MKR LP (T90) (EXPORT)	10301356	RH	46.00	LAMP, PARK & FRT SI MKR & T/SIG (POLYCARBONATE)	2–G17,24
97–02	Y (EXC SIG & MKR LP (T90) (EXPORT)	10301357	LH	46.00	LAMP, PARK & FRT SI MKR & T/SIG (POLYCARBONATE)	2–G17,24
	*EXPORT**********EXPORT**********EXPORT**********EXPORT**********EXPORT*					
97–02	Y SIG & MKR LP (T90) (EXPORT)	16530239	2	24.05	LAMP, FRT T/SIG (SI REPEATER) (02.880)	2–G17,21
97–02	Y SIG & MKR LP (T90) (EXPORT)	5977961	LH	86.00	LAMP, PARK & FRT SI MKR & T/SIG	2–G17,24
97–02	Y SIG & MKR LP (T90) (EXPORT)	5977962	RH	86.00	LAMP, PARK & FRT SI MKR & T/SIG	2–G17,24

2.587 BRACKET – RETAINER – SPRING, Parking, Turn Signal & Cornering Lamp

97–02	Y	10269679	LH	15.75	BRACKET, FRT T/SIG LP (SHARK CAGE)	2–G17,23
97–02	Y	10269680	RH	15.75	BRACKET, FRT T/SIG LP (SHARK CAGE)	2–G17,23
97–02	Y	10401202	2	6.15	RETAINER, PARK & FRT SI MKR & T/SIG LP	2–G17,50
97–02	Y	10291802	2	*1.45	SPRING, PARK & T/SIG LP	2–G17,44

cardiagn.com

2.596 CONNECTOR – RELAY – SOCKET, Parking, Turn Signal & Cornering Lamp

97–02	Y	12117270	1	56.37	CONNECTOR, INLINE–TO PARK & T/SIG LP HARN (8–WAY M W/LEADS) (02.530) (AC–DELCO #PT443)	2–G17,24
97–98	Y	12102747	2	21.73	CONNECTOR, LP–T/SIG (BLACK) (2–WAY F W/LEADS) (03.670) (AC–DELCO #PT374)	2–G17,21
99	Y07–67	12102747	2	21.73	CONNECTOR, LP–T/SIG (BLACK) (2–WAY F W/LEADS) (03.670) (AC–DELCO #PT374)	2–G17,21
00–02	Y07–67	12102747	2	21.73	CONNECTOR, LP–T/SIG (BLACK) (2–WAY F W/LEADS) (03.670) (AC–DELCO #PT374)	2–G17,21
97–98	Y	12077866	1	23.80	RELAY, PARK LP (BLACK) (5–WAY) (MICRO) (09.277) (AC–DELCO #15–5671)	
97–02	Y (EXC SIG & MKR LP (T90) (EXPORT)	12083689	2	50.25	SOCKET, FRT PARK & T/SIG LP (02.694) (AC–DELCO #LS15)	2–G17,36
	*EXPORT**********EXPORT**********EXPORT**********EXPORT**********EXPORT*					
97–98	Y SIG & MKR LP (T90) (EXPORT)	12166325	2	28.83	SOCKET, FRT T/SIG LP (02.694) (AC–DELCO #LS67)	2–G17,19
99–02	Y07–67 SIG & MKR LP (T90) (EXPORT)	12166325	2	28.83	SOCKET, FRT T/SIG LP (02.694) (AC–DELCO #LS67)	2–G17,19
97–98	Y SIG & MKR LP (T90) (EXPORT)	12141388	2	37.50	SOCKET, PARK LP (W/LEADS) (AC–DELCO #LS44)	2–G17,37
99–02	Y07–67 SIG & MKR LP (T90) (EXPORT)	12141388	2	37.50	SOCKET, PARK LP (W/LEADS) (AC–DELCO #LS44)	2–G17,37

2.662 BOLT, Tail Lamp Mounting

97–99	Y	20374961	8	3.33	BOLT, T/LP (M4.2X1.41X30 TAP) (12.183)	

2.679 LAMP – LAMP KIT, Tail Lamp

97–02	Y	10253893	1	86.00	LAMP, HIGH MT STOP	2–H2,6
97–02	Y (EXC TAIL & S/LP (T89) (EXPORT), SPECIAL TAIL & S/LP (T93)	16523533	LH	66.50	LAMP, TAIL (RR STOP & TURN LP) (ALL RED)	2–H2,14
97–02	Y (EXC TAIL & S/LP (T89) (EXPORT), SPECIAL TAIL & S/LP (T93)	16523534	RH	66.50	LAMP, TAIL (RR STOP & TURN LP) (ALL RED)	2–H2,14
	*EXPORT**********EXPORT**********EXPORT**********EXPORT**********EXPORT*					
97–02	Y TAIL & S/LP (T89) (EXPORT)	12533323	LH	139.00	LAMP KIT, RR FOG	2–H2,16
97–01	Y TAIL & S/LP (T89) (EXPORT)	12533324	RH	139.00	LAMP KIT, RR FOG	2–H2,16
97–02	Y TAIL & S/LP (T89) (EXPORT)	10270419	LH	24.05	LAMP, B/U & TAIL (RR STOP & B/U LP) (02.697)	2–H2,14
97–02	Y TAIL & S/LP (T89) (EXPORT)	10270420	RH	24.05	LAMP, B/U & TAIL (RR STOP & B/U LP) (02.697)	2–H2,14
02	Y TAIL & S/LP (T89) (EXPORT)	12533323	LH	139.00	LAMP, RR FOG	2–H2,16
02	Y TAIL & S/LP (T89) (EXPORT)	12533324	RH	139.00	LAMP, RR FOG	2–H2,16
97–02	Y TAIL & S/LP (T89) (EXPORT)	10253891	LH	66.50	LAMP, TAIL (RR STOP & AMBER TURN LP)	2–H2,14
97–02	Y TAIL & S/LP (T89) (EXPORT)	10253892	RH	66.50	LAMP, TAIL (RR STOP & AMBER TURN LP)	2–H2,14

cardiagn.com

2.679 LAMP – LAMP KIT, Tail Lamp (Con't)

97–02	Y SPECIAL TAIL & S/LP (T93)	10299360	LH	66.50	LAMP, TAIL (RR STOP & AMBER TURN LP)	2–H2,14
97–02	Y SPECIAL TAIL & S/LP (T93)	10299361	RH	66.50	LAMP, TAIL (RR STOP & AMBER TURN LP)	2–H2,14

2.689 REFLECTOR, Tail Lamp/Rear End Panel Reflector

*EXPORT****************EXPORT****************EXPORT****************EXPORT****************EXPORT*

97–02	Y SPECIAL TAIL & S/LP (T93)	10269317	2	16.75	REFLECTOR, R/END FASCIA ...	2–H2,9

2.694 CONNECTOR – RELAY – SOCKET, Tail Lamp

97–02	Y	12101899	1	18.52	CONNECTOR, INLINE–TO HIGH MT S/LP (BLACK) (2–WAY F W/LEADS) (02.383) (AC–DELCO #PT169)	2–H2,6
01–02	YY37	12085535	2	18.01	CONNECTOR, LP–HIGH MT STOP (2–WAY F W/LEADS W/INDEX TAB OTR EDGE OF CAVITY B) (02.535) (AC–DELCO #PT146)	
99–02	Y	12088567	1	16.45	RELAY, RR FOG LP (GRAY) (4–WAY) (09.277) (AC–DELCO #15–8571)	
97–02	Y (EXC TAIL & S/LP (T89) (EXPORT), SPECIAL TAIL & S/LP (T93)	12083689	4	50.25	SOCKET, STOP & T/LP (AC–DELCO #LS15)	2–H2,6
97–02	Y	12141302	4	31.11	SOCKET, STOP & T/LP (AC–DELCO #LS40)	2–H2,6

*EXPORT****************EXPORT****************EXPORT****************EXPORT****************EXPORT*

98	Y FRT ABS BRAKE LOC (JAG), SIG & MKR LP (T90) (EXPORT)	12088567	1	16.45	RELAY, RR FOG LP (GRAY) (4–WAY) (09.277) (AC–DELCO #15–8571)	
97–02	Y TAIL & S/LP (T89) (EXPORT), (EXC SPECIAL TAIL & S/LP (T93)	12141301	2	70.89	SOCKET, RR FOG LP (02.535) (AC–DELCO #LS39)	2–H2 3

2.697 LAMP – SOCKET, Back Up Lamp

97–02	Y (EXC TAIL & S/LP (T89) (EXPORT)	16523537	1	57.25	LAMP, B/U (W/RR LIC PLT PKT) ..	2–H2,12
97–02	Y (EXC TAIL & S/LP (T89) (EXPORT)	12141493	2	50.76	SOCKET, B/U LP (02.694) (AC–DELCO #LS49)	2–H2,4

*EXPORT****************EXPORT****************EXPORT****************EXPORT****************EXPORT*

97–02	Y TAIL & S/LP (T89) (EXPORT)	10270419	LH	24.05	LAMP, B/U & TAIL (RR STOP & B/U LP)	2–H2,14
97–02	Y TAIL & S/LP (T89) (EXPORT)	10270420	RH	24.05	LAMP, B/U & TAIL (RR STOP & B/U LP)	2–H2,14
97–02	Y TAIL & S/LP (T89) (EXPORT), (EXC SPECIAL TAIL & S/LP (T93)	12141301	2	70.89	SOCKET, B/U LP (02.535) (AC–DELCO #LS39)	2–H2,4
02	Y TAIL & S/LP (T89) (EXPORT), (EXC SPECIAL TAIL & S/LP (T93)	12141301	2	70.89	SOCKET, B/U LP (02.535) (AC–DELCO #LS39)	2–H2,4

2.698 CONNECTOR – RELAY – SWITCH, Back Up Lamp

98–00	Y	12166226	1	44.37	CONNECTOR, SW–B/U LP (2–WAY F) (W/LEADS & CAPACITOR) (02.447)	
99–01	Y	12085485	1	18.67	CONNECTOR, SW–B/U LP (BLACK) (2–WAY M) (W/LEADS) (02.535) (AC–DELCO #PT107)	

cardiagn.com

2.698 CONNECTOR – RELAY – SWITCH, Back Up Lamp (Con't)

97	Y (EXC SIG & MKR LP (T90) (EXPORT)	12077866	1	23.80	RELAY, B/U LP (BLACK) (5–WAY) (MICRO) (09.277) (AC–DELCO #15–5671)	2–G2,52
98	Y FRT ABS BRAKE LOC (JAG)	12077866	1	23.80	RELAY, B/U LP (BLACK) (5–WAY) (MICRO) (09.277) (AC–DELCO #15–5671)	2–G2,52
99–02	Y	12077866	1	23.80	RELAY, B/U LP (BLACK) (5–WAY) (MICRO) (09.277) (AC–DELCO #15–5671)	2–G2,52
97–02	Y 5.7G (LS1), 6–SPD M/TRANS (MM6)	14069600	1	14.52	SWITCH, B/U LP (M16X1.5 THD)	2–L4,59
01–02	YY37 MANUAL 6 SPD O/D TRANS, TREMEC (M12)	14069600	1	14.52	SWITCH, B/U LP (M16X1.5 THD)	2–L4,59
02	YY37 5.7S (LS6), MANUAL 6 SPD O/D TRANS, TREMEC (M12)	14069600	1	14.52	SWITCH, B/U LP (M16X1.5 THD)	2–L4,59
97–02	Y 4–SPD A/TRANS (M30) ...	12450016	1	47.60	SWITCH, PARK/NEU POSN & B/U LP (04.054) (AC–DELCO #D2285A)	3–F21,1

2.700 LAMP, Rear License Lamp

97–02	Y	16519986	2	9.75	LAMP, RR LIC PLT	2–H2,10

2.708 BOLT, Rear License Lamp

97–02	Y	10400761	4	3.33	BOLT, RR LIC PLT LP (10.252) ...	2–H2,11

2.714 SOCKET, Rear License Lamp

97–02	Y	12141388	2	37.50	SOCKET, RR LIC PLT LP (W/LEADS) (02.596) (AC–DELCO #LS44) .	2–H2,10

2.725 HEADLAMP – LAMP – LENS, Capsule/Headlamp/Foglamp

97–02	Y (EXC RH RULE OF ROAD HDLP (T84) (EXPORT), LH RULE OF ROAD HDLP (T85) (EXPORT)	10302673	LH	435.00	HEADLAMP, (W/OPG DR ACT) (MINI COMP, 94K)	2–G17,7
97–02	Y (EXC RH RULE OF ROAD HDLP (T84) (EXPORT), LH RULE OF ROAD HDLP (T85) (EXPORT)	16526230	RH	435.00	HEADLAMP, (W/OPG DR ACTR) (MINI COMP, 94K)	2–G17,7
97–99	Y FRT FOG LP (T96), (EXC SIG & MKR LP (T90) (EXPORT)	10256960	RH	86.00	LAMP, FRT FOG (GLS LENS/DIE CAST)	2–G17,30
97–99	Y FRT FOG LP (T96), (EXC SIG & MKR LP (T90) (EXPORT)	10438855	LH	86.00	LAMP, FRT FOG (GLS LENS/DIE CAST) (WHEN REPLC THE FOG LAMP, CHECK OPPOSITE SIDE BULB TO VERIFY THAT THETRADE # IS 899. IF BULB IS NOT TRADE 899, REPLC WITH 899 BULB. PART 16525392.) ..	2–G17,30
00–02	Y FRT FOG LP (T96), (EXC SIG & MKR LP (T90) (EXPORT)	10438855	LH	86.00	LAMP, FRT FOG (GLS LENS/DIE CAST)	2–G17,30
00–02	Y FRT FOG LP (T96), (EXC SIG & MKR LP (T90) (EXPORT)	10438856	RH	86.00	LAMP, FRT FOG (GLS LENS/DIE CAST)	2–G17,30

cardiagn.com

2.725 HEADLAMP – LAMP – LENS, Capsule/Headlamp/Foglamp(Con't)

97–02	Y (EXC RH RULE OF ROAD HDLP (T84) (EXPORT), LH RULE OF ROAD HDLP (T85) (EXPORT)	16523785	LH	49.50	LENS, HDLP	2–G17,47
97–02	Y (EXC RH RULE OF ROAD HDLP (T84) (EXPORT), LH RULE OF ROAD HDLP (T85) (EXPORT)	16523786	RH	49.50	LENS, HDLP	2–G17,47
	*EXPORT**********EXPORT**********EXPORT**********EXPORT**********EXPORT*					
97–02	Y LH RULE OF ROAD HDLP (T85) (EXPORT)	10302674	RH	459.00	HEADLAMP, (W/OPG DR ACTR) (JAPAN & UK 'LH RULE OF ROAD')	2–G17,7
97–02	Y LH RULE OF ROAD HDLP (T85) (EXPORT)	10302675	LH	459.00	HEADLAMP, (W/OPG DR ACTR) (JAPAN & UK 'LH RULE OF ROAD')	2–G17,7
97–02	Y RH RULE OF ROAD HDLP (T84) (EXPORT)	10302676	RH	459.00	HEADLAMP, (W/OPG DR ACTR) (MINI COMP, 94K) (EUROPE 'RH RULE OF ROAD')	2–G17,7
97–02	Y RH RULE OF ROAD HDLP (T84) (EXPORT)	10302677	LH	459.00	HEADLAMP, (W/OPG DR ACTR) (MINI COMP, 94K) (EUROPE 'RH RULE OF ROAD')	2–G17,7
97–02	Y SIG & MKR LP (T90) (EXPORT), FRT FOG LP (T96)	10274295	LH	144.00	LAMP, FRT FOG (GLS LENS/DIE CAST)	2–G17,30
97–02	Y SIG & MKR LP (T90) (EXPORT), FRT FOG LP (T96)	10274296	RH	144.00	LAMP, FRT FOG (GLS LENS/DIE CAST)	2–G17,30
97–02	Y LH RULE OF ROAD HDLP (T85) (EXPORT)	16524061	LH	48.50	LENS, HDLP	2–G17,47
97–02	Y LH RULE OF ROAD HDLP (T85) (EXPORT)	16524062	RH	48.50	LENS, HDLP	2–G17,47
97–02	Y RH RULE OF ROAD HDLP (T84) (EXPORT)	16524063	LH	48.50	LENS, HDLP	2–G17,47
97–02	Y RH RULE OF ROAD HDLP (T84) (EXPORT)	16524064	RH	48.50	LENS, HDLP	2–G17,47

2.726 BOLT – BRACKET – NUT – PLATE – VENT, Capsule/Headlamp Mounting

97–02	Y	16513561	AR	*2.01	BOLT, HDLP (M3.5X1.34X9.2MM)	
99–02	Y	16518297	3	3.33	BOLT, HDLP MTG BRKT (TO HDLP)	
97–02	Y	16523679	LH	28.75	BRACKET, HDLP (FOR HEADLAMP DOOR)	2–G17,38
97–02	Y	16523680	RH	28.75	BRACKET, HDLP (FOR HEADLAMP DOOR)	2–G17,38
97–99	Y FRT FOG LP (T96)	10281487	2	*.69	NUT, FRT FOG LP (04.665)	2–G17,31
97–99	Y	10281493	4	*1.00	NUT, HDLP BRKT (03.015)	2–G17,10
00–02	Y	10281493	6	*1.00	NUT, HDLP BRKT (03.015)	2–G17,10
97–02	Y	10290321	LH	8.35	PLATE, HDLP STUD	2–G17,5
97–02	Y	10290322	RH	8.35	PLATE, HDLP STUD	2–G17,5
	*EXPORT**********EXPORT**********EXPORT**********EXPORT**********EXPORT*					
98	Y RH RULE OF ROAD HDLP (T84) (EXPORT), LH RULE OF ROAD HDLP (T85) (EXPORT)	16518297	3	3.33	BOLT, HDLP MTG BRKT (TO HDLP)	
97–02	Y LH RULE OF ROAD HDLP (T85) (EXPORT)	16514289	2	3.45	VENT, HDLP	

cardiagn.com

2.727 BULB – CLIP – CONNECTOR, Capsule/Headlamp/Fog Lamp

00–02	Y FRT FOG LP (T96), (EXC SIG & MKR LP (T90) (EXPORT)	16525392	2	17.04	BULB, FRT FOG LP (AC–DELCO #899)	2–G17,30
97–02	Y (EXC RH RULE OF ROAD HDLP (T84) (EXPORT), LH RULE OF ROAD HDLP (T85) (EXPORT)	9441732	2	14.22	BULB, HDLP (HIGH BEAM) (AC–DELCO #9005)	2–G17,40
97–02	Y (EXC RH RULE OF ROAD HDLP (T84) (EXPORT), LH RULE OF ROAD HDLP (T85) (EXPORT)	9441733	2	14.22	BULB, HDLP (LOW BEAM) (AC–DELCO #09441733)	2–G17,40
02	Y	3816659	1	*.87	CLIP, FRT FOG LP WRG HARN (7" ADJ. W/ROSEBUD FOR .25 DIA HOLE .031–.14 TH) (08.965) ..	
97–02	Y	12102664	2	21.89	CONNECTOR, LP–FOG (BLACK 12085498) (2–WAY F W/LEADS) (USED ON FOG LAMPS W/ STRAIGHT TERMINALS 90DEG TERMS SEE) (02.535) (AC–DELCO #PT331)	2–G17,30
	*EXPORT**********EXPORT**********EXPORT**********EXPORT**********EXPORT*					
97–99	Y FRT FOG LP (T96), (EXC SIG & MKR LP (T90) (EXPORT)	9442881	2	10.67	BULB, FRT FOG LP (AC–DELCO #L893)	2–G17,30
97–02	Y SIG & MKR LP (T90) (EXPORT), FRT FOG LP (T96)	11513798	2	17.04	BULB, FRT FOG LP (AC–DELCO #H3)	2–G17,30
97–02	Y RH RULE OF ROAD HDLP (T84) (EXPORT), LH RULE OF ROAD HDLP (T85) (EXPORT)	11515298	2	14.60	BULB, HDLP	2–G17,40
97–98	Y SIG & MKR LP (T90) (EXPORT)	12125549	2	18.63	CONNECTOR, LP–FOG (2–WAY M) (W/LEADS) (02.535) (AC–DELCO #PT561)	2–G17,30
98	Y SIG & MKR LP (T90) (EXPORT)	12162000	1	.58	CONNECTOR, LP–FOG (BLACK) (2–WAY M) (W/O LEADS) (02.530)	2–G17,30
99–00	Y07–67 SIG & MKR LP (T90) (EXPORT)	12162000	1	.58	CONNECTOR, LP–FOG (BLACK) (2–WAY M) (W/O LEADS) (02.530)	2–G17,30

2.728 BEZEL – DOOR, Capsule/Headlamp/Fog Lamp

97–02	Y	10435411	LH	15.45	BEZEL, HDLP (NEW BEZELS USE PLUG WITH COIN SLOT 10435410, REPLACE CANCELLED BEZELS AS PAIR & WITH NEW PLUGS WITH SLOTS.)	2–G17,32
97–02	Y	10435412	RH	15.45	BEZEL, HDLP (NEW BEZELS USE PLUG WITH COIN SLOT 10435410, REPLACE CANCELLED BEZELS AS PAIR & WITH NEW PLUGS WITH SLOTS.)	2–G17,32
97–02	Y	10447810	LH	52.00	DOOR, HDLP OPG (PIM PLASTIC) .	2–G17,1
97–02	Y	10447811	RH	52.00	DOOR, HDLP OPG	2–G17,1

2.729 CLIP – NUT – PLUG, Capsule/Headlamp Trim

97–02	Y	10282366	2	*.88	CLIP, HDLP BZL (02.662)	2–G17,48
97	Y	14013246	2	*1.13	NUT, HDLP BZL (SPECIAL ANCHOR)	

© 2001 GENERAL MOTORS SERVICE PARTS OPERATIONS–CHEVROLET–15Y

cardiagn.com

2.729 CLIP – NUT – PLUG, Capsule/Headlamp Trim (Con't)

97	Y (1ST DES)	10297460	2	*.52	PLUG, HDLP OPG DR ADJR ACC HOLE (FOR 2ND DES SEE 10400759) (1.30"DIAM) (02.728) .	2–G17,4
97	Y (2ND DES)	10435410	2	.89	PLUG, HDLP OPG DR ADJR ACC HOLE (FOR 1ST DES SEE 10297460. WHEN REPLACING PLUG WITHOUT COIN SLOT, BOTH LEFT & RIGHT BEZELS & PLUGS NEED TO BE REPLACED WITH NEW BEZELS & PLUGS.) (2.40DIA)	2–G17,4
98–99	Y	10435410	2	.89	PLUG, HDLP OPG DR ADJR ACC HOLE (WHEN REPLACING PLUG WITHOUT COIN SLOT, BOTH LEFT & RIGHT BEZELS & PLUGS TO BE REPLACED WITH NEW BEZELS & PLUGS.) (2.40DIA) .	2–G17,4
00–02	Y	10435410	2	.89	PLUG, HDLP OPG DR ADJR ACC HOLE (2.40DIA)	2–G17,4

2.737 PIVOT, Capsule/Headlamp Adjuster

00–02	Y (EXC RH RULE OF ROAD HDLP (T84) (EXPORT), LH RULE OF ROAD HDLP (T85) (EXPORT)	16523661	LH		PIVOT, HDLP CTR	
00–02	Y (EXC RH RULE OF ROAD HDLP (T84) (EXPORT), LH RULE OF ROAD HDLP (T85) (EXPORT)	16523662	RH		PIVOT, HDLP CTR	

2.755 MODULE, Concealed Capsule/Headlamp Control

97–02	Y	16523917	1	152.00	MODULE, HDLP OPG DR ACTR CONT (RT SI ONLY)	2–G17,46

2.760 ACTUATOR – CAP – CONNECTOR, Concealed Capsule/Headlamp Control Drive

97–99	Y (EXC RH RULE OF ROAD HDLP (T84) (EXPORT), LH RULE OF ROAD HDLP (T85) (EXPORT)	16523673	LH	221.00	ACTUATOR, HDLP (AC–DELCO #16523673)	2–G17,49
97–99	Y (EXC RH RULE OF ROAD HDLP (T84) (EXPORT), LH RULE OF ROAD HDLP (T85) (EXPORT)	16523674	RH	221.00	ACTUATOR, HDLP (AC–DELCO #16523674)	2–G17,49
00–02	Y (EXC RH RULE OF ROAD HDLP (T84) (EXPORT), LH RULE OF ROAD HDLP (T85) (EXPORT)	16530235	LH	223.00	ACTUATOR, HDLP (AC–DELCO #16530235)	2–G17,49
00–02	Y (EXC RH RULE OF ROAD HDLP (T84) (EXPORT), LH RULE OF ROAD HDLP (T85) (EXPORT)	16530236	RH	223.00	ACTUATOR, HDLP (AC–DELCO #16530236)	2–G17,49
00–02	Y	16521527	1	5.30	CAP, HDLP ACTR MOT (02.755) .	
97–02	Y	15305874	2	22.54	CONNECTOR, MOT–HDLP OPG DR ACTR (5–WAY F) (W/LEADS) (02.530) (AC–DELCO #PT1015) .	2–G17,49

cardiagn.com

2.760 ACTUATOR – CAP – CONNECTOR, Concealed Capsule/Headlamp Control Drive (Con't)

*EXPORT****************EXPORT****************EXPORT****************EXPORT****************EXPORT*

97–99	Y RH RULE OF ROAD HDLP (T84) (EXPORT), LH RULE OF ROAD HDLP (T85) (EXPORT)	16524153	LH	278.00	ACTUATOR, HDLP (AC–DELCO #16524153)	2–G17,49
97–99	Y RH RULE OF ROAD HDLP (T84) (EXPORT), LH RULE OF ROAD HDLP (T85) (EXPORT)	16524154	RH	278.00	ACTUATOR, HDLP (AC–DELCO #16524154)	2–G17,49
00–02	Y RH RULE OF ROAD HDLP (T84) (EXPORT), LH RULE OF ROAD HDLP (T85) (EXPORT)	16530237	LH	223.00	ACTUATOR, HDLP (AC–DELCO #16530237)	2–G17,49
00–02	Y RH RULE OF ROAD HDLP (T84) (EXPORT), LH RULE OF ROAD HDLP (T85) (EXPORT)	16530238	RH	223.00	ACTUATOR, HDLP (AC–DELCO #16530238)	2–G17,49

2.810 HORN KIT, Horn

97–99	Y	12368061	1	45.61	HORN KIT, GENERIC (HIGH NOTE) (BRKT KIT INCLUDED) (AC–DELCO #D1921C)	2–F15,3
97–02	Y	12368062	1	45.61	HORN KIT, GENERIC (LOW NOTE) (BRKT KIT INCLUDED) (AC–DELCO #D1920C)	2–F15,3
00–02	Y	12368061	1	45.61	HORN KIT, GENERIC (HIGH NOTE) (BRKT KIT INCLUDED) (AC–DELCO #D1921C)	2–F15,3

2.812 NUT, Horn

97–02	Y	10281493	1	*1.00	NUT, HORN (03.015)	2–F15,5

2.815 CONNECTOR – RELAY, Horn

97–02	Y	15306302	1	20.87	CONNECTOR, HORN (GREY) (2–WAY F W/LEADS) (04.710) (AC–DELCO #PT1357)	2–F15,4
97–02	Y	12088567	1	16.45	RELAY, HORN (GRAY) (4–WAY) (09.277) (AC–DELCO #15–8571)	2–G2,54

2.892 SOCKET, Turn Signal Lamp

97–02	Y	12141301	4	70.89	SOCKET, RR T/SIG LP (02 535) (AC–DELCO #LS39)	2–H2,14

2.895 BOLT – SWITCH, Turn Signal Lamp

97–02	Y	26036497	4	3.38	BOLT, T/SIG SW (M5X.8X15) (PAN HD TORX TAP) (06.760)	4–E20,18
97–02	Y	26075870	1	213.71	SWITCH, HDLP & T/SIG & CRCONT (W/ LVR) (02.485) (AC–DELCO #D1512G)	

2.896 CAM, Turn Signal Switch Cancelling

97–02	Y	26044739	1	5.42	CAM, T/SIG SW CANC	4–E17,11

cardiagn.com

CHEVROLET
LAMP SOCKET CHART

Y BODY

YEAR	BODY STYLE	2.575 FRT SI MKR	2.575 RR SI MKR	2.596 FRT PK & T/SIG	2.596 FRT T/SIG	2.596 FRT PARK
1997-00	Y	12141388	12141388	12083689(F)	12166325(A)	12141388(A)

YEAR	BODY STYLE	2.694 TAIL	2.694 STOP	2.694 RR T/SIG	2.697 BACK UP	2.714 LICENSE	2.694 RR FOG
1997-00	Y	12141302(E) 12083689(B)	12141320(E) 12083689(B)	12141301	12141301(C) 12141493(D)	12141388	12141301(C)

(A) WITH T90-EXPORT
(B) EXC T89, T93-EXPORT
(C) WITH T89-EXPORT
(D) EXC T89-EXPORT
(E) WITH T89,T93-EXPORT
(F) EXC T90-EXPORT

cardiagn.com

3.001 TANK – TANK KIT, Fuel

97–98	Y	12458238	RH	575.00	TANK KIT, FUEL	2–I4,18
97–98	Y	12458239	LH	575.00	TANK KIT, FUEL	2–I4,38
99	Y	12458240	RH	575.00	TANK KIT, FUEL	2–I9,15
99	Y	12458241	LH	575.00	TANK KIT, FUEL	2–I9,42
00–02	Y	12459858	RH	575.00	TANK KIT, FUEL	2–I14,15
00–02	Y	12459859	LH	575.00	TANK KIT, FUEL	2–I14,42
97–98	Y	10292054	RH	566.00	TANK, FUEL (INCLS HOSES, MODULES, TANKS, BOLTS, SEAL)	2–I4,15
97–98	Y	10410831	LH	566.00	TANK, FUEL (INCLS HOSES, MODULES, TANK, SEAL, STRAINER)	2–I4,42

3.003 HOSE – HOUSING, Fuel Tank Filler

97–98	Y	10404104	LH	10.61	HOSE, F/TNK FIL	2–I4,44
99	Y	10299104	1	21.22	HOSE, F/TNK FIL	2–I9,44
97–02	Y	10401497	1	9.00	HOUSING, F/TNK FIL PIPE (POCKET)	2–I4,58

3.015 BOLT – SHIELD – STRAP, Fuel Tank

97	Y	11515756	6	*.52	BOLT, F/TNK H/SHLD (M8X1.25X20) (08.900)	
99–02	Y	10306421	RH	18.85	SHIELD, F/TNK	2–I9,79
99–02	Y	10410936	LH	18.85	SHIELD, F/TNK	2–I9,81
97–98	Y	10291216	RH	43.17	STRAP, F/TNK SHLD	2–I4,24
97–98	Y	10403525	LH	43.17	STRAP, F/TNK SHLD	2–I4,41
99–02	Y	10410938	RH	43.17	STRAP, F/TNK SHLD	2–I9,24
99–02	Y	10442787	LH	42.38	STRAP, F/TNK SHLD	2–I9,41

3.023 NUT – STUD, Fuel Tank Mounting Strap

97–02	Y	10281493	4	*1.00	NUT, F/TNK STRP (03.015)	2–I4,23
02	Y	25651470	LH	3.33	STUD, F/TNK STRP (M6X1X24.5MM) (W/14.7X19.7MM CLIP) (02.483)	

3.028 CAP – CONNECTOR – HOLDER – SWITCH, Fuel Tank Filler

97–02	Y	22816286	1	7.67	CAP, F/TNK FIL (W/HDL) (AC–DELCO #22616290) (STANDARD)	2–I4,50
97–02	Y	12167129	1	30.60	CONNECTOR, SW–F/TNK FIL DR LK REL (5–WAY FEMALE M/P 280 (W/LEADS)) (BLACK) (5–WAY F) (W/LEADS) (M/P 280) (10.525) (AC–DELCO #PT795)	5–H2,31
97–00	Y	10284784	1	3.33	HOLDER, F/TNK FIL CAP	2–I4,57
97–02	Y (EXC EUROPEAN PROVISIONS (VD1) (EXPORT)	10276017	1	9.31	SWITCH, F/TNK FIL DR LK REL	5–H2,32
	*EXPORT**********EXPORT**********EXPORT**********EXPORT**********EXPORT*					
00–02	Y EUROPEAN PROVISIONS (VD1) (EXPORT)	10280957	1	66.19	SWITCH, R/CMPT LID & FUEL FIL DR REL (12.243) (AC–DELCO #D7007C)	5–H2,32

cardiagn.com

3.107 CONNECTOR – DAMPENER – MODULE – MODULE KIT – SENSOR – SENSOR KIT, Fuel Tank Meter

99–02	Y	12085495	1	27.30	CONNECTOR, SEN–F/TNK PRESS (BLACK) (3–WAY F) (W/LEADS) (02.535) (AC–DELCO #PT117)	2–I9,82
00–02	Y	15305889	1	25.77	CONNECTOR, SEN–F/TNK PRESS (3–WAY M, W/LEADS) (02.530) (AC–DELCO #PT1033)	2–I14,82
97–02	Y	12126487	2	38.52	CONNECTOR, SEN–FUEL LVL (4–WAY F) (W/LEADS) (02.383) (AC–DELCO #PT757)	2–I4,21
99–02	Y 5.7G (LS1)	12555909	1	58.90	DAMPENER, FUEL PULSE	2–I26,4
01–02	Y 5.7S (LS6)	12555909	1	58.90	DAMPENER, FUEL PULSE	2–I26,4
97–99	Y	88896043	RH	354.00	MODULE KIT, F/TNK F/PMP (AC–DELCO #MU1007)	2–I4,19
00–02	Y	12459861	LH	488.80	MODULE KIT, F/TNK F/PMP (INCLS FUEL METER) (AC–DELCO #MU1001)	2–I14,38
00–02	Y	88895126	RH	358.00	MODULE KIT, F/TNK F/PMP (INCLS FUEL METER) (AC–DELCO #MU1004)	2–I14,19
97–99	Y	12455734	LH	DISCON	MODULE, F/TNK F/PMP	
97–99	Y	12458243	LH	493.50	MODULE, F/TNK F/PMP (AC–DELCO #MU245)	2–I4,39
97–99	Y	88899034	1	42.00	SENSOR KIT, FUEL LVL (ALSO ORDER SOCK KIT NO.12458245)	
00–01	Y	88899034	1	42.00	SENSOR KIT, FUEL LVL (ALSO ORDER SOCK KIT NO.12459862)	
00–02	Y	16238399	1	39.33	SENSOR, F/TNK PRESS	2–I14,82

3.110 STRAINER – STRAINER KIT, Fuel Tank Gage

97–99	Y	12458245	LH	142.83	STRAINER KIT, FUEL (AC–DELCO #TS1004)	2–I4,40
00–02	Y	12459862	RH	72.10	STRAINER KIT, FUEL (AC–DELCO #TS140)	2–I14,17
97–98	Y	12533419	LH	27.20	STRAINER, F/PMP FUEL (03.107)	2–I4,40

3.112 SEAL, Fuel Gage to Tank

97–99	Y	12458250	2	22.14	SEAL, FUEL SDR (AC–DELCO #G4)	2–I4,22
00–02	Y	12459863	2	82.37	SEAL, FUEL SDR (AC–DELCO #G25)	2–I14,52

3.120 CLAMP – HOSE – PIPE – VALVE – VENT, Evaporation Emission System (Fuel Tank End)

97–99	Y	10039976	1	6.60	CLAMP, F/TNK FIL VENT HOSE (2.75 DIA) (03.417)	2–I4,46
97–98	Y	10298123	1	7.09	HOSE, EVAP EMIS	2–I4,28
99	Y	10417549	1	17.23	HOSE, EVAP EMIS CNSTR SOV VLV (03.145)	2–I9,77
97–98	Y	10298122	1	27.54	HOSE, EVAP EMIS RR	2–I4,4
99	Y	10299144	1	72.63	HOSE, EVAP EMIS RR	2–I9,4
00–02	Y	10409949	1	27.54	HOSE, EVAP EMIS RR	2–I14,4
97–98	Y	10292057	1	19.33	HOSE, F/TNK VENT	2–I4,43
99	Y	10299105	1	19.33	HOSE, F/TNK VENT	2–I9,43
97–98	Y	10276201	1	19.33	HOSE, F/TNK VENT VLV	2–I4,14
97–98	Y	10417554	1	22.17	PIPE, F/TNK FIL VENT	2–I4,47
99	Y	10417554	1	22.17	PIPE, F/TNK FIL VENT	2–I4,47

cardiagn.com

3.120 CLAMP – HOSE – PIPE – VALVE – VENT, Evaporation Emission System (Fuel Tank End) (Con't)

00–02	Y	10405679	1	27.11	PIPE, F/TNK FIL VENT	2–I14,47
99	Y	10299145	1	38.70	VALVE, F/TNK VENT	2–I9,28
97–99	Y	10298121	1	35.80	VENT, F/TNK	2–I4,26

3.130 BRACKET – CANISTER – CONNECTOR – COVER – RETAINER – VALVE, Fuel Tank Evaporator Control (Engine End)

97–02	Y	10287787	1	9.00	BRACKET, EVAP EMIS CNSTR	2–I4,12
97–02	Y 5.7G (LS1)	12560884	1	9.00	BRACKET, EVAP EMIS CNSTR PURGE SOL VLV	1–J17,560
99–02	Y	10277833	1	4.97	BRACKET, EVAP EMIS CNSTR PURGE SOL VLV	2–I9,75
01–02	Y 5.7S (LS6)	12560884	1	9.00	BRACKET, EVAP EMIS CNSTR PURGE SOL VLV	1–J17,560
97–98	Y 5.7G (LS1)	17113335	1	86.52	CANISTER, EVAP EMIS (AC–DELCO #215–182)	2–I4,9
99	Y 5.7G (LS1)	17113327	1	105.37	CANISTER, EVAP EMIS (AC–DELCO #215–176)	2–I9,9
00–02	Y 5.7G (LS1)	17113332	1	116.73	CANISTER, EVAP EMIS (AC–DELCO #215–181)	2–I14,9
01–02	Y 5.7S (LS6)	17113332	1	116.73	CANISTER, EVAP EMIS (AC–DELCO #215–181)	2–I14,9
99–02	Y	12101858	1	18.67	CONNECTOR, SOL–EVAP EMIS CNSTR VENT VLV (RED) (2–WAY F W/LEADS) (02.535) (AC–DELCO #PT250)	
00–02	Y	10409447	1	3.33	COVER, EVAP EMIS CNSTR OPG	2–I14,85
00–02	"	20664092	3	*.54	RETAINER, EVAP EMIS CNSTR OPG CVR (PUSH IN) (BLACK) (PUSH IN W/SCREW) (6.3MM DIA X 23MM) (01.276)	2–I14,84
99	Y	24574755	1	22.00	VALVE, EVAP EMIS CNSTR CONT	2–I9,76
97–02	Y 5.7G (LS1)	1997278	1	17.04	VALVE, EVAP EMIS CNSTR PURGE SOL (AC–DELCO #214–641)	1–J17,559
01–02	Y 5.7S (LS6)	1997278	1	17.04	VALVE, EVAP EMIS CNSTR PURGE SOL (AC–DELCO #214–641)	1–J17,559
00–02	Y	10293954	1	22.00	VALVE, EVAP EMIS CNSTR VENT SOL	2–I14,76

3.140 CONNECTOR – SWITCH, Early Fuel Evaporation Control

97–02	Y 5.7G (LS1)	12101858	1	18.67	CONNECTOR, SOL–EVAP EMIS CNSTR PURGE VLV (RED) (2–WAY F W/LEADS) (02.535) (AC–DELCO #PT250)	
97–98	Y 4–SPD A/TRANS (M30), 6–SPD M/TRANS (MM6)	12102747	1	21.73	CONNECTOR, SW–EVAP EMIS CNSTR PURGE VAC DIAGN (BLACK) (2–WAY F W/LEADS) (03.670) (AC–DELCO #PT374)	
97–98	Y 5.7G (LS1)	12556798	1	19.59	SWITCH, EVAP EMIS CNSTR PURGE VAC	1–H10,563

3.145 CLAMP – CLIP – HARNESS – HOSE – TUBE, Early Fuel Evaporation

00–02	Y	21008428	2		CLAMP, EVAP EMIS CNSTR VENT SOL VLV HOSE	2–I14,78
99	Y	10281421	1	3.50	CLIP, EVAP EMIS HOSE (04.785)	6–F2,30
97–98	Y 5.7G (LS1), 6–SPD M/TRANS (MM6)	12557008	1	41.36	HARNESS, EVAP EMIS CNSTR PURGE	1–H10,561

© 2001 GENERAL MOTORS SERVICE PARTS OPERATIONS–CHEVROLET –15Y

cardiagn.com

3.145 CLAMP – CLIP – HARNESS – HOSE – TUBE, Early Fuel Evaporation (Con't)

97–98	Y 5.7G (LS1), 4–SPD A/TRANS (M30)	12557008	1	41.36	HARNESS, EVAP EMIS CNSTR PURGE	1–H10,561
97–02	Y	10276212	1	44.50	HOSE, EVAP EMIS CNSTR PURGE (03.107)	2–I4,8
97–02	Y 5.7G (LS1)	12552222	1	6.50	TUBE, EVAP EMIS CNSTR PURGE (FROM VALVE TO THROTTLE BODY)	1–J17,558
99–02	Y 5.7G (LS1)	12562563	1	16.64	TUBE, EVAP EMIS CNSTR PURGE (FUEL FEED PIPE ASM TO ENG PURGE VALVE) (INCLUDES SERVICE PORT)	2–I9,74
01–02	Y 5.7S (LS6)	12552222	1	6.50	TUBE, EVAP EMIS CNSTR PURGE (FROM VALVE TO THROTTLE BODY)	1–J17,558
01–02	Y 5.7S (LS6)	12562563	1	16.64	TUBE, EVAP EMIS CNSTR PURGE (FUEL FEED PIPE ASM TO ENG PURGE VALVE) (INCLUDES SERVICE PORT)	2–I9,74

3.162 CLAMP – CLIP – PLATE – RETAINER – SEAL – STUD, Fuel Line

00–02	Y	10417433	1	3.33	CLAMP, FUEL FEED HOSE (1.0" DIA)	2–I14,45
00–02	Y	25635535	AR	4.55	CLIP, FUEL FEED & RTN HOSE (STAINLESS STEEL)	
97–02	Y	10288898	1	8.28	CLIP, FUEL FEED & RTN PIPE	2–I4,69
97–98	Y	10276208	4	4.53	CLIP, FUEL FRT PIPE	2–I4,2
99–02	Y	10276208	3	4.53	CLIP, FUEL FRT PIPE	2–I4,2
97–02	Y	10281327	3	8.28	CLIP, FUEL PIPE	2–I4,67
97–02	Y	10402723	2	3.33	PLATE, FUEL FEED PIPE CLIP STUD	6–D8,50
97–02	Y	10276219	3	8.28	RETAINER, FUEL FEED & RTN FRT PIPE	2–I4,66
97–98	Y	12530143	1	3.33	RETAINER, FUEL FEED PIPE FTG (3/8") (9.53MM) (STAINLESS STEEL)	2–I4,75
97–98	Y	12530144	1	3.33	RETAINER, FUEL RTN PIPE FTG (5/16") (7.9MM) (STAINLESS STEEL)	2–I4,72
98–00	Y	10415038	2	3.45	SEAL, FUEL FEED PIPE CLIP STUD PLT (15.222)	6–D8,51
97–02	Y	10267731	3	3.33	STUD, FUEL FEED & RTN PIPE CLIP	6–D2,26

3.163 CAP – CONNECTOR KIT – HOSE – PIPE, Fuel Line

97–98	Y	10254646	1	3.33	CAP, FUEL FEED PIPE	2–I4,74
97–98	Y	10254647	1	3.33	CAP, FUEL RTN PIPE	2–I4,73
97–98	Y	12522917	1	3.33	CONNECTOR KIT, FUEL FEED PIPE (GREEN) (INCLS INST SHT & RET) (USE WITH 3/8 TUBE, NYLON) (03.162)	
99	Y	10410934	1	44.30	HOSE, AUX FUEL RTN RR	2–I9,35
00–02	Y	10448902	1	44.30	HOSE, AUX FUEL RTN RR	2–I14,35
97–98	Y	10292053	1	55.90	HOSE, FUEL FEED (CROSSOVER 2.75 DIAMETER)	2–I4,1
99	Y	10299108	1	107.97	HOSE, FUEL FEED	2–I9,1
00–02	Y	10409948	1	76.31	HOSE, FUEL FEED (2.0" DIA) (CROSSOVER HOSE)	2–I14,1
97–98	Y	10279630	1	54.53	HOSE, FUEL FEED FRT	2–I4,70

© 2001 GENERAL MOTORS SERVICE PARTS OPERATIONS–CHEVROLET–15.

cardiagn.com

3.163 CAP – CONNECTOR KIT – HOSE – PIPE, Fuel Line (Con't)

99–02	Y	10401798	1	44.52	HOSE, FUEL FEED FRT	2–I9,73
97–98	Y	10413424	1	80.83	HOSE, FUEL FEED RR (W/CHECK VALVE)	2–I4,33
99–02	Y	10448899	1	80.83	HOSE, FUEL FEED RR	2–I9,33
97–98	Y	10404929	1	44.75	HOSE, FUEL FEED RR C/OVR	2–I4,7
99	Y	10410935	1	44.30	HOSE, FUEL PRESS REG RTN	2–I9,34
00–02	Y	10448903	1	44.30	HOSE, FUEL PRESS REG RTN	2–I14,34
97–98	Y	10279629	1	44.75	HOSE, FUEL RTN FRT (JMPR)	2–I4,71
97–98	Y	10404927	1	44.75	HOSE, FUEL RTN RR	2–I4,34
97–98	Y	10404931	1	44.75	HOSE, FUEL SDR FUEL FEED	2–I4,35
99–02	Y	10448900	1	48.81	PIPE, AUX FUEL FEED RR	2–I9,7
99–02	Y	10448901	1	48.81	PIPE, AUX FUEL RTN RR	2–I9,5
97–98	Y	10276216	1	83.41	PIPE, FUEL FEED & RTN	2–I4,68
99–02	Y	10299138	1	104.33	PIPE, FUEL FEED & RTN	2–I9,68
97–98	Y	10404930	1	36.67	PIPE, FUEL SDR FUEL FEED (PIPE JET PUMP TO LH TK)	2–I4,5

3.265 COVER – MANIFOLD, Engine Fuel Intake Manifold

NOTE: EXHAUST MANIFOLD IN GROUP 3.601.

97–02	Y 5.7G (LS1)	12561106	1	58.97	COVER, ENG BLK VALLEY	1–J12,528
01–02	Y 5.7S (LS6)	12568002	1	58.97	COVER, ENG BLK VALLEY	1–J17,528
97–00	Y 5.7G (LS1)	88894095	1	2250.00	MANIFOLD, INT (SERV)	2–I24,1
01–02	Y 5.7G (LS1)	88890524	1		MANIFOLD, INT (INCLS MANIF, GASKETS, SEALS, PLUGS, SENSOR)	2–I26,1
01–02	Y 5.7S (LS6)	88890524	1		MANIFOLD, INT (INCLS, MANIF, GASKETS, SEALS, PLUGS, SENSOR)	2–I26,1

3.270 GASKET – GASKET KIT – SEAL, Manifold to Cylinder Head

97–02	Y 5.7G (LS1)	12533587	1	55.81	GASKET KIT, INT MANIF (CONTAINS 8 GASKETS)	2–I24,21
01–02	Y 5.7S (LS6)	12533587	8	55.81	GASKET KIT, INT MANIF (CONTAINS 8 GASKETS)	2–I24,21
97–02	Y 5.7G (LS1)	12558178	1	15.06	GASKET, ENG BLK VALLEY CVR	1–J17,529
01–02	Y 5.7S (LS6)	12558178	1	15.06	GASKET, ENG BLK VALLEY CVR	1–J17,529
01–02	Y 5.7G (LS1)	12561912	1	8.90	GASKET, EXH MANIF	1–J17,518
01–02	Y 5.7S (LS6)	12561912	1	8.90	GASKET, EXH MANIF	1–J17,518
97–02	Y 5.7G (LS1)	12560251	2	*1.90	SEAL, INT MANIF	1–J17,577
01–02	Y 5.7S (LS6)	12560251	2	*1.90	SEAL, INT MANIF	1–J17,577

3.272 GASKET, Intake to Exhaust Manifold

97–00	Y 5.7G (LS1)	12558573	2	8.88	GASKET, EXH MANIF (03.270)	1–I11,518

3.275 BOLT, Intake & Exhaust Manifold

97–02	Y 5.7G (LS1)	12560206	12	*3.33	BOLT, EXH MANIF	1–J17,521
01–02	Y 5.7S (LS6)	12560206	12	*3.33	BOLT, EXH MANIF	1–J17,521
97–02	Y 5.7G (LS1)	12552344	10	3.33	BOLT, INT MANIF (W/FLAT WASHER) (M6X1.0X21.8, 13.6 OD, GM500M, ZF, MACH, ADHES)	2–I24,11
01–02	Y 5.7S (LS6)	12552344	10	3.33	BOLT, INT MANIF (W/FLAT WASHER) (M6X1.0X21.8, 13.6 OD, GM500M, ZF, MACH, ADHES)	2–I24,11

cardiagn.com

3.300 INJECTOR KIT, Fuel Injection

99–00	Y 5.7G (LS1)	12456154	8	85.49	INJECTOR KIT, M/PORT FUEL (AC–DELCO #12456154)	2–I26,6
97–98	Y 5.7G (LS1)	12533952	8	119.83	INJECTOR KIT, SEQ M/PORT FUEL (AC–DELCO #12533952)	2–I24,6
01–02	Y 5.7G (LS1)	12482704	8	119.83	INJECTOR KIT, SEQ M/PORT FUEL	2–I26,6
01–02	Y 5.7S (LS6)	12482704	8	119.83	INJECTOR KIT, SEQ M/PORT FUEL	2–I26,6

3.330 BRACKET – CAP – COVER – RAIL – REGULATOR – RING – STOP – STUD – TUBE – VALVE, Fuel Injection

97–02	Y 5.7G (LS1)	12556074	LH	6.08	BRACKET, F/INJN FUEL RL (ON INTAKE MANIFOLD BEHIND FUEL RAIL–STOP)	2–I24,10
97–02	Y 5.7G (LS1)	12560384	RH	11.57	BRACKET, F/INJN FUEL RL (90 DEG "S" TYPE BRKT)	2–I24,10
01–02	Y 5.7S (LS6)	12556074	LH	6.08	BRACKET, F/INJN FUEL RL (ON INTAKE MANIFOLD BEHIND FUEL RAIL–STOP)	2–I24,10
01–02	Y 5.7S (LS6)	12560384	RH	11.57	BRACKET, F/INJN FUEL RL (90 DEG "S" TYPE BRKT)	2–I24,10
97–02	Y 5.7G (LS1)	25532662	2	5.80	CAP, FUEL PRESS SERV VLV (03.163) (AC–DELCO #214–1044)	2–I24,16
01	Y 5.7S (LS6)	25532662	2	5.80	CAP, FUEL PRESS SERV VLV (03.163) (AC–DELCO #214–1044)	2–I24,16
02	Y 5.7S (LS6)	25532662	2	5.80	CAP, FUEL PRESS SERV VLV (03.163) (AC–DELCO #214–1044)	2–I24,16
97–98	Y 5.7G (LS1)	12556455	RH	35.02	COVER, F/INJN FUEL RL	1–H4,272
97–98	Y 5.7G (LS1)	12559261	LH	35.02	COVER, F/INJN FUEL RL	1–H4,271
99–02	Y 5.7G (LS1)	12561502	RH	41.84	COVER, F/INJN FUEL RL	1–I16,272
99–02	Y 5.7G (LS1)	12561503	LH	41.84	COVER, F/INJN FUEL RL	1–I16,271
01–02	Y 5.7S (LS6)	12564257	LH	61.98	COVER, F/INJN FUEL RL	1–J8,271
01–02	Y 5.7S (LS6)	12564258	RH	61.98	COVER, F/INJN FUEL RL	1–J8,272
97–98	Y 5.7G (LS1)	12556705	1	249.99	RAIL, SEQ M/PORT F/INJN FUEL (AC–DELCO #12556705)	2–I24,2
99–02	Y 5.7G (LS1)	12562815	1	246.89	RAIL, SEQ M/PORT F/INJN FUEL (AC–DELCO #217–1401)	2–I26,2
01–02	Y 5.7S (LS6)	12562815	1	246.89	RAIL, SEQ M/PORT F/INJN FUEL (AC–DELCO #217–1401)	2–I26,2
97–98	Y 5.7G (LS1)	12554677	1	62.77	REGULATOR, FUEL PRESS (AC–DELCO #12554677)	2–I24,4
97–02	Y 5.7G (LS1)	24500246	1	6.18	RING, FUEL PRESS REG RET	2–I24,5
01–02	Y 5.7S (LS6)	24500246	1	6.18	RING, FUEL PRESS REG RET	2–I24,5
01–02	Y 5.7G (LS1)	12556074	1	6.08	STOP, F/INJN FUEL RL	2–I24,10
01–02	Y 5.7S (LS6)	12556074	1	6.08	STOP, F/INJN FUEL RL	2–I24,10
97–02	Y 5.7G (LS1)	12554211	4	5.80	STUD, F/INJN FUEL RL (HFH 6X1X18.5X14 W/ADH, 6X1X14, 39.1 OAL, 14.2 OD, 9.8, 7114M) (AC–DELCO #12554211)	2–I24,12
01–02	Y 5.7S (LS6)	12554211	4	5.80	STUD, F/INJN FUEL RL (HFH 6X1X18.5X14 W/ADH, 6X1X14, 39.1 OAL, 14.2 OD, 9.8, 7114M) (AC–DELCO #12554211)	2–I24,12
97	Y	10278878	2	.29	STUD, FUEL PRESS REG BRKT (02.559)	
97–98	Y 5.7G (LS1)	12557155	1	7.10	TUBE, FUEL PRESS REG VAC	2–I24,19

cardiagn.com

3.330 BRACKET – CAP – COVER – RAIL – REGULATOR – RING – STOP – STUD – TUBE – VALVE, Fuel Injection (Con't)

97–02	Y 5.7G (LS1)	25532663	1	4.00	VALVE, FUEL PRESS SERV (03.302)	2–I24,15
01–02	Y 5.7S (LS6)	25532663	1	4.00	VALVE, FUEL PRESS SERV (03.302)	2–I24,15

3.331 SEAL KIT, Multi Port Fuel Injection Fuel Rail

97–02	Y 5.7G (LS1)	12482706	2	60.00	SEAL KIT, F/INJN FUEL RL (INCLUDES SEAL, F/INJR (O RING)) (AC–DELCO #12482706)	
01–02	Y 5.7S (LS6)	12482706	2	60.00	SEAL KIT, F/INJN FUEL RL (INCLUDES SEAL, F/INJR (O RING)) (AC–DELCO #12482706)	

3.332 RETAINER, Fuel Injector Metering

97–02	Y 5.7G (LS1)	12554679	8	4.35	RETAINER, F/INJR	2–I24,7
01–02	Y 5.7S (LS6)	12554679	8	4.35	RETAINER, F/INJR	2–I24,7

3.335 BODY, Fuel Injection Air Meter

97–99	Y 5.7G (LS1)	17113564	1	442.12	BODY, THROT (AC–DELCO #17113564)	2–I24,3
00–02	Y 5.7G (LS1)	17113669	1	460.00	BODY, THROT (INCLS:THROTTLE BODY SENSOR POSITION)	2–I26,3
01–02	Y 5.7S (LS6)	17113669	1	460.00	BODY, THROT (INCLS:THROTTLE BODY SENSOR POSITION)	2–I26,3

3.336 BOLT – SEAL, Multi Port Fuel Injection Throttle Body

97–00	Y 5.7G (LS1)	11514008	3	*1.91	BOLT, THROT BODY (M6X1.0X30) (08.900)	2–J15,10
97–02	Y 5.7G (LS1)	12552542	1	8.68	SEAL, THROT BODY	2–I24,20
01–02	Y 5.7S (LS6)	12552542	1	8.68	SEAL, THROT BODY	2–I24,20

3.337 HOSE, Throttle Body Coolant Supply

97–02	Y	12557352	1	15.73	HOSE, THROT BODY HTR OTLT	1–L22,19

3.339 CONNECTOR – SENSOR KIT, Multi Port Fuel Injection Throttle Position

97–02	Y	12167121	1	48.96	CONNECTOR, SEN–THROT POSN (6–WAY F) (W/LEADS) (WIRE CAVITIES CAN BE PLUGGED W/12065266) (02.383) (AC–DELCO #PT787)	1–J17,511
97–02	Y	17113566	1	93.49	SENSOR KIT, THROT POSN (AC–DELCO #17113566)	2–J2,5

3.403 INSULATOR – NUT – RETAINER, Air Cleaner and Silencer

01–02	Y 5.7G (LS1)	25179816	2	.83	INSULATOR, A/CL	
01–02	Y 5.7S (LS6)	25179816	2	.83	INSULATOR, A/CL	
97–00	Y 5.7G (LS1)	10281487	2	*.69	NUT, A/CL (TO FRT BMPR IMP BAR) (04.665)	2–J12,13
01–02	Y 5.7G (LS1), 5.7S (LS6)	10281487	2	*.69	NUT, A/CL (04.665)	2–J12,13
97–00	Y 5.7G (LS1)	12550385	2	*.43	RETAINER, A/CL (POSN #1) (M6X1.0X24) (T30 TORX)	2–J12,14
97–00	Y 5.7G (LS1)	25099299	2	6.33	RETAINER, A/CL (POSN #2)	2–J12,15
01–02	Y 5.7G (LS1)	12550385	2	*.43	RETAINER, A/CL (M6X1.0X24) (T30 TORX)	2–J12,14

cardiagn.com

3.403 INSULATOR – NUT – RETAINER, Air Cleaner and Silencer (Con't)

01–02	Y 5.7S (LS6)	12550385	2	*.43	RETAINER, A/CL (M6X1.0X24) (T30 TORX)	2–J12,14
01–02	Y 5.7G (LS1)	25099299	2	6.33	RETAINER, A/CL	2–J12,15
01–02	Y 5.7S (LS6)	25099299	2	6.33	RETAINER, A/CL	2–J12,15
01–02	Y 5.7G (LS1)	25176485	1	12.65	RETAINER, A/CL	2–K2,16
01–02	Y 5.7S (LS6)	25176485	1	12.65	RETAINER, A/CL	2–K2,16

3.405 INSULATOR, Air Cleaner

97–02	Y 5.7G (LS1)	25176248	2	*2.25	INSULATOR, A/CL HSG (30.0MM O.D.) (03.417)	2–J12,21

3.406 HOUSING, Air Cleaner To Carb/Throttle Body Mounting

97–00	Y 5.7G (LS1)	25147310	1	69.75	HOUSING, A/CL	2–J12,29
01	Y 5.7S (LS6)	25314818	1	83.33	HOUSING, A/CL	2–J24,3
01–02	Y 5.7G (LS1)	25314818	1	83.33	HOUSING, A/CL	2–J24,3
01–02	Y 5.7S (LS6)	25314818	1	83.33	HOUSING, A/CL	2–J24,3

3.407 CLAMP – DUCT – GROMMET – INDICATOR, Air Cleaner and Silencer

97–00	Y 5.7G (LS1)	25166560	1	8.60	CLAMP, A/CL	2–J12,32
01–02	Y 5.7G (LS1), (EXC MODIFICATION–NOISE CONTROL (B4H) (EXPORT)	25314816	1	35.83	CLAMP, A/CL	2–J24,1
01–02	Y 5.7S (LS6)	25314816	1	35.83	CLAMP, A/CL	2–J24,1
99–00	Y 5.7G (LS1), 6–SPD M/TRANS (MM6), (EXC MODIFICATION–NOISE CONTROL (B4H) (EXPORT)	25179366	1	67.92	DUCT, A/CL OTLT (W/RESO & INT AIR TEMP SEN)	2–J12,24
99–00	Y 5.7G (LS1), 4–SPD A/TRANS (M30)	25179366	1	67.92	DUCT, A/CL OTLT (W/RESO & INT AIR TEMP SEN)	2–J12,24
01–02	Y 5.7G (LS1)	25314820	1	23.50	DUCT, A/CL OTLT	2–K2,6
01–02	Y 5.7S (LS6)	25314820	1	23.50	DUCT, A/CL OTLT	2–K2,6
01–02	Y 5.7G (LS1)	25314823	1	67.92	DUCT, A/CL OTLT (W/RESO & INT AIR TEMP SEN)	2–J24,6
01–02	Y 5.7S (LS6)	25314823	1	67.92	DUCT, A/CL OTLT (W/RESO & INT AIR TEMP SEN)	2–J24,6
97	Y 5.7G (LS1), 4–SPD A/TRANS (M30)	25179366	1	67.92	DUCT, A/CL OTLT RR (W/INT AIR TEMP SEN)	2–J12,24
97	Y 5.7G (LS1), 6–SPD M/TRANS (MM6), (EXC MODIFICATION–NOISE CONTROL (B4H) (EXPORT)	25179366	1	67.92	DUCT, A/CL OTLT RR (W/INT AIR TEMP SEN)	2–J12,24
98	Y 5.7G (LS1)	25179366	1	67.92	DUCT, A/CL OTLT RR (W/INT AIR TEMP SEN) (CUT HOLE IF AIR RESTRICTION INDICATOR IS USED.)	2–J12,24
01–02	Y 5.7G (LS1)	25325384	1	72.00	DUCT, A/CL OTLT RR (W/INT AIR TEMP SEN)	
01–02	Y 5.7G (LS1)	25098174	1	1.85	GROMMET, A/CL AIR RSTN IND (03.410)	2–J9,7
01–02	Y 5.7S (LS6)	25098174	1	1.85	GROMMET, A/CL AIR RSTN IND (03.410)	2–J9,7
98–00	Y 5.7G (LS1)	15713008	1	10.10	INDICATOR, A/CL AIR RSTN	
	*EXPORT**********EXPORT**********EXPORT**********EXPORT**********EXPORT*					
01–02	Y 5.7G (LS1), MODIFICATION–NOISE CONTROL (B4H) (EXPORT)	25314816	1	35.83	CLAMP, A/CL	2–J24,1

cardiagn.com

3.407 CLAMP – DUCT – GROMMET – INDICATOR, Air Cleaner and Silencer (Con't)

99–00	Y 5.7G (LS1), 6–SPD M/TRANS (MM6), MODIFICATION–NOISE CONTROL (B4H) (EXPORT)	25179368	1	65.55	DUCT, A/CL OTLT (W/RESO & INT AIR TEMP SEN)	2–J18,24
97	Y 5.7G (LS1), 6–SPD M/TRANS (MM6), MODIFICATION–NOISE CONTROL (B4H) (EXPORT)	25169371	1	67.92	DUCT, A/CL OTLT RR (W/INT AIR TEMP SEN)	2–J15,24

3.410 COVER – ELEMENT – SEAL, Air Cleaner Intake

97–00	Y 5.7G (LS1)	25147318	1	119.00	COVER, A/CL HSG	2–J12,27
01–02	Y 5.7G (LS1)	25315957	1	119.00	COVER, A/CL HSG	2–J24,5
01–02	Y 5.7S (LS6)	25315957	1	119.00	COVER, A/CL HSG	2–J24,5
97–02	Y 5.7G (LS1)	25042562	1	N.L.	ELEMENT, A/CL (PAPER) (AC–DELCO #A917C)	2–J12,28
01	Y 5.7S (LS6)	25042562	1	N.L.	ELEMENT, A/CL (PAPER) (AC–DELCO #A917C)	2–J12,28
97–00	Y 5.7G (LS1)	25098174	1	1.85	SEAL, A/CL HSG CVR	2–J9,7

3.415 GROMMET, Air Cleaner Controls

97–00	Y 5.7G (LS1)	24504388	1	*1.84	GROMMET, INT AIR TEMP SEN	2–J12,22

3.417 DUCT, Air Cleaner Air Intake

97–00	Y 5.7G (LS1)	25166558	1	36.25	DUCT, FRT INT AIR	2–J12,30
01	Y 5.7S (LS6)	25314814	1	60.00	DUCT, FRT INT AIR	2–J24,2
01–02	Y 5.7G (LS1)	25314814	1	60.00	DUCT, FRT INT AIR	2–J24,2
02	Y 5.7S (LS6)	12567571	1	60.00	DUCT, FRT INT AIR	2–K2,2

3.451 PEDAL – STOP, Accelerator Pedal

97–02	Y	3920296	1	7.10	PEDAL, ACCEL (PEDAL ONLY)	2–K5,11
97–98	Y	12565643	1	230.61	PEDAL, ACCEL (W/BRKT & POSN SEN)	2–K5,12
99–02	Y	12565643	1	230.61	PEDAL, ACCEL (W/BRKT & POSN SEN)	2–K5,12
97–02	Y	12558786	1	17.74	STOP, ACCEL PED	2–K5,5

3.452 PIN, Accelerator Pedal Mounting

97–02	Y	25162606	1	3.33	PIN, ACCEL PED PIV	2–K5,10

3.454 CONNECTOR – NUT, Accelerator Pedal Lever

97–00	Y 5.7G (LS1)	12116247	1	20.05	CONNECTOR, MOT–THROT ACTR (BLACK) (2–WAY M) (W/LEADS) (13.090) (AC–DELCO #PT288)	2–K5,3
97	Y07	12125676	1	66.81	CONNECTOR, MOT–THROT ACTR (TO I/P HARNESS) (BLACK) (10–WAY F) (W/LEADS) (02.530) (AC–DELCO #PT588)	2–K5,3
97–02	Y	27000835	2	3.33	NUT, ACCEL PED LVR SUPT (INSERT M8X1.25) (STEEL) (06.760)	2–K5,8

3.459 SPRING, Accelerator Return Spring

97–02	Y	25162608	1	3.33	SPRING, ACCEL PED	2–K5,9

cardiagn.com

3.601 MANIFOLD, Engine Exhaust Manifold

97–98	Y 5.7G (LS1)	12561308	LH	322.00	MANIFOLD, EXH	1–I11,520
97–98	Y 5.7G (LS1)	12561309	RH	322.00	MANIFOLD, EXH	1–I11,520
99	Y 5.7G (LS1)	12561308	LH	322.00	MANIFOLD, EXH	1–I11,520
99	Y 5.7G (LS1)	12561309	RH	322.00	MANIFOLD, EXH	1–I11,520
00	Y 5.7G (LS1)	12562638	LH	365.00	MANIFOLD, EXH	1–I11,520
00	Y 5.7G (LS1)	12562639	RH	365.00	MANIFOLD, EXH	1–I11,520
01–02	Y 5.7G (LS1)	12561255	LH	192.00	MANIFOLD, EXH	1–J17,520
01–02	Y 5.7S (LS6)	12561255	LH	192.00	MANIFOLD, EXH	1–J17,520
01–02	Y 5.7G (LS1)	12561256	RH	192.00	MANIFOLD, EXH	1–J17,520
01–02	Y 5.7S (LS6)	12561256	RH	192.00	MANIFOLD, EXH	1–J17,520

3.602 BOLT – BRACKET – SHIELD, Exhaust Manifold

01–02	Y 5.7G (LS1)	10228350	5	3.75	BOLT, EXH MANIF H/SHLD (M6X12)	1–J17,580
01–02	Y 5.7S (LS6)	10228350	5	3.75	BOLT, EXH MANIF H/SHLD (M6X12)	1–J17,580
97–02	Y	10296759	6	3.75	BRACKET, EXH MUFF H/SHLD	2–K17,32
01–02	Y 5.7G (LS1)	12568317	RH	24.45	SHIELD, EXH MANIF HT	1–J17,579
01–02	Y 5.7S (LS6)	12568317	RH	24.45	SHIELD, EXH MANIF HT	1–J17,579
01–02	Y 5.7G (LS1)	12569065	LH	17.90	SHIELD, EXH MANIF HT	1–J17,579
01–02	Y 5.7S (LS6)	12569065	LH	17.90	SHIELD, EXH MANIF HT	1–J17,579

3.609 CONVERTER – PIPE, Exhaust Pipe

97	Y LEADED FUEL EMIS EXPORT (NM8)	12534952	1	720.65	CONVERTER, OXIDN CTLTC (W/EXH PIPE) (03.685)	2–K17,29
97–98	Y	88896488	1	1012.00	CONVERTER, OXIDN CTLTC (W/EXH PIPE) (03.685)	2–K17,29
98	Y LEADED FUEL EMIS EXPORT (NM8)	12458423	1	1012.00	CONVERTER, OXIDN CTLTC (W/EXH PIPE) (03.685)	2–K20,29
99	Y (EXC LEADED FUEL EMIS EXPORT (NM8)	88896488	1	1012.00	CONVERTER, OXIDN CTLTC (W/EXH PIPE) (03.685)	2–K17,29
00	Y CALIF EMIS LEV (NC1)	12455780	1	1281.00	CONVERTER, OXIDN CTLTC (W/EXH PIPE) (03.685)	2–K20,29
01	Y37 CALIF EMIS LEV (NC1), FEDERAL EMIS NLEV (NF7)	10426194	1	1299.00	CONVERTER, OXIDN CTLTC (W/EXH PIPE) (03.685)	2–K20,29
02	YY37 CALIF EMIS LEV (NC1), FEDERAL EMIS NLEV (NF7)	10439825	1		PIPE, CTLTC CONV (03.685)	2–K20,29
	*EXPORT**********EXPORT**********EXPORT**********EXPORT**********EXPORT*					
99	Y LEADED FUEL EXPORT EMIS (NM2)	12458423	1	1012.00	CONVERTER, OXIDN CTLTC (W/EXH PIPE) (03.685)	2–K20,29
01–02	Y07–67 JAPANESE EMISSION (NA3), CALIF EMIS LEV (NC1), FEDERAL EMIS NLEV (NF7), EMISSION SYSTEM, EEC 00 (NT3)	88895882	1	1429.00	CONVERTER, OXIDN CTLTC (W/EXH PIPE) (03.685)	2–K20,29
01–02	Y07–67 LEADED FUEL EXPORT EMIS (NM2)	88895885	1	1047.00	CONVERTER, OXIDN CTLTC (W/EXH PIPE) (03.685)	2–K20,29

3.611 SEAL, Exhaust Pipe

97–02	Y	12555555	2	9.10	SEAL, EXH MANIF PIPE	2–K17,3

cardiagn.com

3.613 STUD, Exhaust Pipe

97–99	Y 5.7G (LS1)	12561310	6	3.55	STUD, EXH PIPE	1–I11,525
00–02	Y 5.7G (LS1)	12562640	3	3.55	STUD, EXH PIPE (M10X1.5X36.5, 22 THD, M10X1.5X16, 14 THD, 20.8 OD, 5.8, 6164M,)	1–J17,525
01–02	Y37 5.7S (LS6)	12562640	3	3.55	STUD, EXH PIPE (M10X1.5X36.5, 22 THD, M10X1.5X16, 14 THD, 20.8 OD, 5.8, 6164M,)	1–J17,525

3.616 BOLT – BRACE – HANGER – WASHER, Exhaust Pipe

97–98	Y	11515756	2	*.52	BOLT, EXH PIPE RR HNGR (POS#1) (M8X1.25X20) (08.900)	
97–00	Y POSN #3	14060030	4	3.33	BOLT, EXH PIPE RR HNGR (HEX M10X1.5X35 10.9 PC) (00.029)	2–K17,21
97–99	Y	15997626	4	3.38	BOLT, EXH PIPE RR HNGR (POSN #3) (M10X1.5) (05.586)	
97–02	Y	12552247	1	11.00	BRACE, EXH PIPE (03.690)	2–K17,7
97–02	Y	10273796	RH	9.55	HANGER, EXH PIPE RR	2–K17,11
97–02	Y	10273797	LH	9.55	HANGER, EXH PIPE RR	2–K17,11
97–02	Y	25525493	8	.56	WASHER, EXH PIPE H/SHLD (SPR, CUP, 5.2X27.0X0.254, 4.5 TALL, SS, PL) (03.613)	2–K17,25

3.655 BOLT – BRACKET – INSULATOR – NUT – SPACER, Air Injection Reactor Pump and Multi–Function Air Compressor

00	Y (1ST DES)	15152297	3	10.40	BOLT, SECD AIR INJN PUMP (1ST DES USES BOLT–ON PUMP MOUNTING INSULATORS; FOR 2ND DES SEE 24507759)	
97–99	Y 5.7G (LS1)	12553608	1	12.74	BRACKET, SECD AIR INJN PUMP	2–J4,18
00–02	Y	12566934	1	8.00	BRACKET, SECD AIR INJN PUMP (MUST ALSO USE (3) 24507759 INSULATORS IF PUMP IS ORIGINALLY MOUNTED WITH BOLT–ON INSULATORS)	2–J9,23
00	Y (1ST DES)	15007725	3	3.33	INSULATOR, SECD AIR INJN PUMP BRKT (1ST DES USES BOLT–ON PUMP MOUNTING INSULATORS; FOR 2ND DES SEE 24507759) (CODE 7725)	2–J9,21
00	Y (2ND DES)	24507759	1	3.33	INSULATOR, SECD AIR INJN PUMP BRKT (2ND DES USES PRESSED IN PUMP MOUNTING INSULATOR; FOR 1ST DES SEE 15007725 (INSULATOR), 15007726 (SPACER) & 15152297 (BOLT)	2–J9,21
01–02	Y	24507759	3	3.33	INSULATOR, SECD AIR INJN PUMP BRKT	2–J9,21
97–99	Y 5.7G (LS1)	10281487	3	*.69	NUT, SECD AIR INJN PUMP BRKT (04.665)	2–J4,17
00–02	Y	10281487	3	*.69	NUT, SECD AIR INJN PUMP BRKT (04.665)	2–J4,17
00	Y (1ST DES)	15007726	3	3.33	SPACER, SECD AIR INJN PUMP BRKT (1ST DES USES BOLT–ON PUMP MOUNTING INSULATORS; FOR 2ND DES SEE 24507726) (CODE 7726)	

cardiagn.com

3.660 CONNECTOR – PUMP, Air Injection Reactor Pump and Multi–Function Air Compressor

97–99	Y	12117025	1	22.50	CONNECTOR, MOT–SECD AIR INJN PUMP (BLACK) (3–WAY F) (W/LEADS) (02.383) (AC–DELCO #PT420)	
00–02	Y	15306103	1	20.56	CONNECTOR, MOT–SECD AIR INJN PUMP (2 WAY F W/LEADS) (AC–DELCO #PT1264)	
97–99	Y 5.7G (LS1)	24505066	1	185.94	PUMP, SECD AIR INJN (AC–DELCO #215–345)	2–J4,16
00	Y	12568382	1	185.94	PUMP, SECD AIR INJN (AC–DELCO #215–426)	2–J9,19
01	Y	12568382	1	185.94	PUMP, SECD AIR INJN (AC–DELCO #215–426)	2–J9,19
02	Y	12568623	1	185.94	PUMP, SECD AIR INJN (AC–DELCO #215–439)	2–J9,19

3.670 CONNECTOR – LABEL – MODULE – RELAY – SOLENOID – VALVE, Emission Control System

97–99	Y	12167308	2	22.17	CONNECTOR, MDL–PWRT CONT (80–WAY F) (USE TERM 12084912 18 GA & TERM 12084913 20 GA)	2–K7,1
01–02	Y	12167308	2	22.17	CONNECTOR, MDL–PWRT CONT (80–WAY F) (USE TERM 12084912 18 GA & TERM 12084913 20 GA)	2–K7,1
97–02	Y	12191065	1	3.33	CONNECTOR, MDL–THROT ACTR CONT (TO ENG HARNESS) (16–WAY F, W/O LEADS, M/P 100W)	2–K7,4
98	Y FRT ABS BRAKE LOC (JAG)	12116247	1	20.05	CONNECTOR, MDL–THROT ACTR CONT (BLACK) (2–WAY M) (W/LEADS) (13.090) (AC–DELCO #PT288)	2–K7,3
98–02	Y	12125676	2	66.81	CONNECTOR, MDL–THROT ACTR CONT (TO I/P HARNESS) (BLACK) (10–WAY F) (W/LEADS) (02.530) (AC–DELCO #PT588)	2–K7,3
99–00	Y	12116247	1	20.05	CONNECTOR, SOL–SECD AIR INJN BL VLV (BLACK) (2–WAY M) (W/LEADS) (13.090) (AC–DELCO #PT288)	2–K7,3
00	Y	12102747	1	21.73	CONNECTOR, SOL–SECD AIR INJN BYPASS VLV (BLACK) (2–WAY F W/LEADS) (AC–DELCO #PT374)	
01–02	YY07–67	12102747	1	21.73	CONNECTOR, SOL–SECD AIR INJN BYPASS VLV (BLACK) (2–WAY F W/LEADS) (AC–DELCO #PT374)	
01	Y 5.7G (LS1)	12564047	1	8.75	LABEL, VEH EMIS CONT INFO (NYB) (08.808)	4–H18,12
97–98	Y 5.7G (LS1)	25311783	1	236.56	MODULE, ELEK THROT ACTR CONT	2–K5,1
99–02	Y	25311783	1	236.56	MODULE, ELEK THROT ACTR CONT	2–K5,1
97	Y	16232148	1	243.79	MODULE, PWRT CONT (REMAN) (AC–DELCO #16232148)	2–K7,1

cardiagn.com

98	Y	16238212	1	225.19	MODULE, PWRT CONT (REMAN) (AC–DELCO #16238212)	2–K7,1
99–00	Y 5.7G (LS1)	9354896	1	182.84	MODULE, PWRT CONT (REMAN) (REQUIRES PROGRAMMING PRIOR TO PROPER OPERATION IN VEHICLE)	2–K7,1
01–02	Y	12200411	1	227.26	MODULE, PWRT CONT (REMAN) (AC–DELCO #12200411)	2–K7,1
01–02	Y 5.7G (LS1), 3.15R (G90), JAPANESE EMISSION (NA3)	12200411	1	227.26	MODULE, PWRT CONT (REMAN) (ID DHYJ) (AC–DELCO #12200411)	2–K7,1
01–02	Y 5.7G (LS1), 3.15R (G90), POWERTRAIN CONT MODULE (K29), FEDERAL EMIS NLEV (NF7)	12200411	1	227.26	MODULE, PWRT CONT (REMAN) (ID DHYK) (AC–DELCO #12200411)	2–K7,1
01–02	Y 5.7G (LS1), 3.15R (G90), LEADED FUEL EXPORT EMIS (NM2)	12200411	1	227.26	MODULE, PWRT CONT (REMAN) (ID DHYL) (AC–DELCO #12200411)	2–K7,1
01–02	Y 5.7G (LS1), 6–SPD M/TRANS (MM6), JAPANESE EMISSION (NA3)	12200411	1	227.26	MODULE, PWRT CONT (REMAN) (ID DHYM) (AC–DELCO #12200411)	2–K7,1
01–02	Y 5.7G (LS1), 6–SPD M/TRANS (MM6), FEDERAL EMIS NLEV (NF7), CALIF EMIS LEV (NC1), (EXC POWERTRAIN CONT MODULE (K29)	12200411	1	227.26	MODULE, PWRT CONT (REMAN) (ID DHYN) (AC–DELCO #12200411)	2–K7,1
01–02	Y 5.7G (LS1), 6–SPD M/TRANS (MM6), EMISSION SYSTEM, EEC 00 (NT3)	12200411	1	227.26	MODULE, PWRT CONT (REMAN) (ID DHYP) (AC–DELCO #12200411)	2–K7,1
01–02	Y 5.7G (LS1), 6–SPD M/TRANS (MM6), POWERTRAIN CONT MODULE (K29), FEDERAL EMIS NLEV (NF7)	12200411	1	227.26	MODULE, PWRT CONT (REMAN) (ID DHYR) (AC–DELCO #12200411)	2–K7,1
01–02	Y 5.7S (LS6), MANUAL 6 SPD O/D TRANS, TREMEC (M12), CALIF EMIS LEV (NC1), FEDERAL EMIS NLEV (NF7), (EXC POWERTRAIN CONT MODULE (K29)	12200411	1	227.26	MODULE, PWRT CONT (REMAN) (ID DHYS) (AC–DELCO #12200411)	2–K7,1
01–02	Y 5.7S (LS6), MANUAL 6 SPD O/D TRANS, TREMEC (M12), POWERTRAIN CONT MODULE (K29), FEDERAL EMIS NLEV (NF7)	12200411	1	227.26	MODULE, PWRT CONT (REMAN) (ID DHYT) (AC–DELCO #12200411)	2–K7,1
01–02	Y 5.7G (LS1), 2.73R (GU2), CALIF EMIS LEV (NC1), FEDERAL EMIS NLEV (NF7), (YGH)	12200411	1	227.26	MODULE, PWRT CONT (REMAN) (ID DJMA) (AC–DELCO #12200411)	2–K7,1
01–02	Y 5.7G (LS1), 3.15R (G90), EMISSION SYSTEM, EEC 00 (NT3)	12200411	1	227.26	MODULE, PWRT CONT (REMAN) (ID DJMB) (AC–DELCO #12200411)	2–K7,1
01–02	Y 5.7G (LS1), 3.15R (G90), CALIF EMIS LEV (NC1), FEDERAL EMIS NLEV (NF7), (EXC POWERTRAIN CONT MODULE (K29)	12200411	1	227.26	MODULE, PWRT CONT (REMAN) (ID DJMC) (AC–DELCO #12200411)	2–K7,1

cardiagn.com

3.670 CONNECTOR – LABEL – MODULE – RELAY – SOLENOID – VALVE, Emission Control System (Con't)

01–02	Y 3.4E (LA1), 4–SPD A/TRANS (MN5), 3.29 (FR9)	12209614	1		MODULE, PWRT CONT (REMAN) (REQUIRES PROGRAMMING) (AC–DELCO #12209614)	2–K7,1
02	Y	12200411	1	227.26	MODULE, PWRT CONT (AC–DELCO #12200411)	2–K7,1
97–00	Y 5.7G (LS1), (EXC SIG & MKR LP (T90) (EXPORT) ...	12088567	1	16.45	RELAY, SECD AIR INJN PUMP (GRAY) (4–WAY) (09.277) (AC–DELCO #15–8571)	2–G10,12
01–02	Y	12088567	1	16.45	RELAY, SECD AIR INJN PUMP (GRAY) (4–WAY) (09.277) (AC–DELCO #15–8571)	2–G10,12
00–02	Y	1997212	1	21.03	SOLENOID, SECD AIR INJN SW VLV SOL VLV (AC–DELCO #214–358)	2–J9,6
97–00	Y 5.7G (LS1)	22048212	2	22.42	VALVE, SECD AIR INJN CHK (AC–DELCO #214–419)	2–J4,3
01–02	Y	22048212	2	22.42	VALVE, SECD AIR INJN CHK (AC–DELCO #214–419)	2–J4,3
00	Y 5.7G (LS1)	12558524	1	30.62	VALVE, SECD AIR INJN SHUTOFF (POA 12558522 KIT)	2–J9,16
01–02	Y	12558524	1	30.62	VALVE, SECD AIR INJN SHUTOFF (POA 12558522 KIT)	2–J9,16

3.671 BOLT KIT – BRACKET – CLAMP – FILTER – PLATE, Emission Control System

97	Y	16210984	1	6.83	BOLT KIT, PCM HSG CVR (W/OVERSIZED SELF TAPPING SCREWS)	
97–98	Y	10286699	1	13.11	BRACKET, PCM (INR)	2–K14,2
97–98	Y	10286700	1	13.11	BRACKET, PCM (OTR)	2–K14,9
99–02	Y	10288066	1	9.09	BRACKET, PCM (INNER)	2–K14,2
99–02	Y	10288067	1	9.09	BRACKET, PCM (OUTER)	2–K14,9
00–02	Y	1985088	1	*1.03	CLAMP, EGR VAC REG SOL VLV FLTR	2–J9,4
00–02	Y	1977796	1	5.80	FILTER, EGR VAC REG SOL VLV (AC–DELCO #219–14)	2–J9,5
00–02	Y	10404603	1	1.70	PLATE, SECD AIR INJN SW VLV SOL VLV SOL ANC (04.785) ...	2–J9,2

3.675 BOLT – CLAMP – CLIP – HOSE – PIPE, Emission System

97–01	Y	11515764	1	3.33	BOLT, SECD AIR INJN PIPE (POSN #2) (M10X1.5X20, 18 THD) (08.900)	2–J4,2
97–00	Y 5.7G (LS1)	12556127	4	*2.01	BOLT, SECD AIR INJN PIPE (POSN #1) (M8X1.25X24.4) (20 THD) (00.056)	2–J4,10
01–02	Y	12556127	4	*2.01	BOLT, SECD AIR INJN PIPE (M8X1.25X24.4) (20 THD) (00.056)	2–J4,10
00–02	Y	1623010	1	*.74	CLAMP, SECD AIR INJN HOSE (01.762)	2–J4,11
97–99	Y 5.7G (LS1)	1623010	1	*.74	CLAMP, SECD AIR INJN PUMP HOSE (LWR) (01.762)	2–J4,11
97–99	Y 5.7G (LS1)	1623010	1	*.74	CLAMP, SECD AIR INJN PUMP HOSE (UPR) (01.762)	2–J4,11
97–99	Y 5.7G (LS1)	2012781	1	4.67	CLIP, SECD AIR INJN PUMP HOSE (01.166)	2–J4,24

cardiagn.com

00	Y	2012781	1	4.67	CLIP, SECD AIR INJN PUMP HOSE (01.166)	2–J4,24
01–02	Y	10311858	1	3.35	CLIP, SECD AIR INJN PUMP HOSE	2–J7,14
97	Y 5.7G (LS1)	12557749	1	7.87	HOSE, SECD AIR INJN PUMP (A.I.R. PMP OUT HOSE TO A.I.R. PIPE)	2–J4,12
97–99	Y 5.7G (LS1)	12557750	1	11.67	HOSE, SECD AIR INJN PUMP (A.I.R. PMP OUT TO A.I.R. PIPE HOSE TO PUMP)	2–J4,22
98	Y 5.7G (LS1), (EXC FRT ABS BRAKE LOC (JAG)	12557749	1	7.87	HOSE, SECD AIR INJN PUMP (A.I.R. PMP OUT HOSE TO A.I.R. PIPE)	2–J4,12
98	Y 5.7G (LS1), FRT ABS BRAKE LOC (JAG)	12558519	1	7.87	HOSE, SECD AIR INJN PUMP (A.I.R. PMP O JT HOSE TO A.I.R. PIPE)	2–J4,12
99	Y 5.7G (LS1)	12558519	1	7.87	HOSE, SECD AIR INJN PUMP (A.I.R. PMP OUT HOSE TO A.I.R. PIPE)	2–J4,12
00–02	Y	12558519	1	7.87	HOSE, SECD AIR INJN PUMP (TO INTER PIPE)	2–J4,12
00–02	Y	12559497	1	7.87	HOSE, SECD AIR INJN PUMP	2–J9,18
00–02	Y	12559498	1	11.67	HOSE, SECD AIR INJN PUMP	2–J7,16
97–00	Y 5.7G (LS1)	12557747	1	8.88	HOSE, SECD AIR INJN PUMP A/CL (A/CL TO SECD A.I.R. PMP IN HOSE)	2–J9,10
97–99	Y 5.7G (LS1)	12557748	1	7.87	HOSE, SECD AIR INJN PUMP A/CL (A/CL HOSE TO A.I.R. PMP IN)	2–J4,20
00–02	Y	12559493	1	7.87	HOSE, SECD AIR INJN PUMP A/CL	2–J9,12
01–02	Y 5.7G (LS1)	12557747	1	8.88	HOSE, SECD AIR INJN PUMP A/CL (A/CL TO SECD A.I.R. PMP IN HOSE)	2–J9,10
01–02	Y 5.7S (LS6)	12557747	1	8.88	HOSE, SECD AIR INJN PUMP A/CL (A/CL TO SECD A.I.R. PMP IN HOSE)	2–J9,10
00	YY	15324846	1	18.68	HOSE, SECD AIR INJN SW VLV SOL VLV VAC (FWD LP WRG SECTION) (09.281) (COMES T/W HVAC VAC TK HOSE)	2–J9,1
97–98	Y 5.7G (LS1)	12553615	1	28.41	PIPE, SECD AIR INJN (POSN #1) (AC–DELCO #219–204)	2–J4,1
97–98	Y 5.7G (LS1)	12553616	1	28.41	PIPE, SECD AIR INJN (POSN #2) (AC–DELCO #219–205)	2–J4,9
97–98	Y 5.7G (LS1)	12555053	1	28.41	PIPE, SECD AIR INJN (POSN #3) (AC–DELCO #219–206)	2–J4,6
99–00	Y 5.7G (LS1)	12558995	RH	50.62	PIPE, SECD AIR INJN (AC–DELCO #219–241)	2–J4,1
99–00	Y 5.7G (LS1)	12558996	LH	50.62	PIPE, SECD AIR INJN (AC–DELCO #219–242)	2–J4,9
99–0J	Y 5.7G (LS1)	12558997	1	12.44	PIPE, SECD AIR INJN (INTER) (AC–DELCO #219–243)	2–J4,6
01–02	Y	12558997	1	12.44	PIPE, SECD AIR INJN (INTER) (AC–DELCO #219–243)	2–J4,6
01–02	Y	12561494	RH	50.62	PIPE, SECD AIR INJN (AC–DELCO #219–346)	2–J7,2
01–02	Y	12561495	LH	50.62	PIPE, SECD AIR INJN (AC–DELCO #219–347)	2–J7,10

cardiagn.com

97–99	Y 5.7G (LS1)	1623010	1	*.74	CLAMP, SECD AIR INJN PUMP A/CL HOSE (01.762)	2–J4,19
97–02	Y	12555054	1	3.50	CONNECTOR, SECD AIR INJN HOSE	2–J4,22
97–00	Y 5.7G (LS1)	12553612	RH	3.55	CONNECTOR, SECD AIR INJN PIPE (POSN #1, TO DOOR) (66.7MM LG) (STRAIGHT)	2–J4,5
97–98	Y 5.7G (LS1)	12553614	LH	3.55	CONNECTOR, SECD AIR INJN PIPE (POSN #2, TO DOOR)	2–J4,7
99–02	Y	12558998	LH	3.55	CONNECTOR, SECD AIR INJN PIPE	2–J4,7
01–02	Y	12553612	RH	3.55	CONNECTOR, SECD AIR INJN PIPE (66.7MM LG) (STRAIGHT)	2–J4,5
97–00	Y	1263193	1	*2.90	CONNECTOR, SECD AIR INJN PUMP A/CL HOSE (01.762)	2–J9,8
00	Y	12555054	1	3.50	CONNECTOR, SECD AIR INJN PUMP A/CL HOSE	2–J4,22
01–02	Y 5.7G (LS1)	1263193	1	*2.90	CONNECTOR, SECD AIR INJN PUMP A/CL HOSE (01.762)	2–J9,8
01–02	Y 5.7S (LS6)	1263193	1	*2.90	CONNECTOR, SECD AIR INJN PUMP A/CL HOSE (01.762)	2–J9,8
01–02	Y 5.7G (LS1)	12555054	1	3.50	CONNECTOR, SECD AIR INJN PUMP A/CL HOSE	2–J4,22
01–02	Y 5.7S (LS6)	12555054	1	3.50	CONNECTOR, SECD AIR INJN PUMP A/CL HOSE	2–J4,22
98–99	Y (EXC LEADED FUEL EMIS EXPORT (NM8)	5617102	AR	3.33	GASKET, OXY SEN	2–K20,2
97–00	Y 5.7G (LS1)	12553617	2	*1.04	GASKET, SECD AIR INJN PIPE	2–J4,8
01–02	Y	12553617	2	*1.04	GASKET, SECD AIR INJN PIPE	2–J4,8
97	Y	12088567	1	16.45	RELAY, SECD AIR INJN BYPASS VLV WOT (GRAY) (4–WAY) (09.277) (AC–DELCO #15–8571)	2–G2,12
97–00	Y 5.7G (LS1), (EXC SIG & MKR LP (T90) (EXPORT)	12088567	1	16.45	RELAY, SECD AIR INJN BYPASS VLV WOT (GRAY) (4–WAY) (09.277) (AC–DELCO #15–8571)	2–G2,12
	*EXPORT**********EXPORT**********EXPORT**********EXPORT**********EXPORT*					
00	Y JAPANESE EMISSION (NA3), EUROPEAN EMISSION (NA7), CALIF EMIS LEV (NC1), FED EMIS SYS (NF2)	5617102	AR	3.33	GASKET, OXY SEN	2–K20,2
01–02	Y JAPANESE EMISSION (NA3), CALIF EMIS LEV (NC1), FEDERAL EMIS NLEV (NF7), EMISSION SYSTEM, EEC 00 (NT3)	5617102	AR	3.33	GASKET, OXY SEN	2–K20,2
97–98	Y 5.7G (LS1), LEADED FUEL EMIS EXPORT (NM8)	25509274	4	3.33	PLUG, OXY SEN HOLE (EXT HEX, 18X1.5X10 TAPERED 1:16, 19 OD, 22 OAL, SAE) (08.971)	

cardiagn.com

97–02	Y	12102741	2	26.79	CONNECTOR, INLINE–TO OXY SEN (FRT) (4–WAY F) (W/LEADS, IN A ROW) (04.651) (AC–DELCO #PT368)	2–K17,4
97–02	Y	15305801	2	28.32	CONNECTOR, INLINE–TO OXY SEN (RR) (4–WAY M) (W/LEADS) (02.530) (AC–DELCO #PT919)	2–K17,6
01–02	Y 6–SPD M/TRANS (MM6), 4–SPD A/TRANS (M30)	12102754	1	42.33	CONNECTOR, INLINE–TO OXY SEN (7–WAY F, W/LEADS) (08.965) (AC–DELCO #PT381)	
97–00	Y	12102620	1	20.16	CONNECTOR, SEN–INT AIR TEMP (GRAY) (2–WAY F) (W/LEADS) (AC–DELCO #PT307)	
97–02	Y 5.7G (LS1)	12129946	1	*2.30	CONNECTOR, SEN–MAP (GRAY) (3–WAY F)	2–J12,1
01–02	Y 5.7S (LS6)	12129946	1	*2.30	CONNECTOR, SEN–MAP (GRAY) (3–WAY F)	2–J12,1
97–00	Y	12085495	1	27.30	CONNECTOR, SEN–MASS AIRFLOW (BLACK) (3–WAY F) (W/LEADS) (02.535) (AC–DELCO #PT117)	
97	Y 4–SPD A/TRANS (M30), 6–SPD M/TRANS (MM6)	12102747	1	21.73	CONNECTOR, SEN–MASS AIRFLOW (BLACK) (2–WAY F W/LEADS) (03.670) (AC–DELCO #PT374)	
01–02	Y 6–SPD M/TRANS (MM6), 4–SPD A/TRANS (M30)	15306113	1	27.30	CONNECTOR, SEN–MASS AIRFLOW (5–WAY F) (AC–DELCO #PT1274)	
01–02	Y 6–SPD M/TRANS (MM6), 4–SPD A/TRANS (M30)	15305801	1	28.32	CONNECTOR, SEN–SECD OXY (4–WAY M) (W/LEADS) (02.530) (AC–DELCO #PT919)	2–K17,6
97–02	Y	12101899	1	18.52	CONNECTOR, SEN–VEH SPD (BLACK) (2–WAY F W/LEADS) (02.383) (AC–DELCO #PT169)	
01–02	Y	15306302	1	20.87	CONNECTOR, SEN–VEH SPD (GREY) (2–WAY F W/LEADS) (04.710) (AC–DELCO #PT1357)	
97–02	Y 5.7G (LS1)	16194007	1	3.33	SEAL, MAP SEN	2–J12,33
01	Y37 5.7S (LS6)	16194007	1	3.33	SEAL, MAP SEN	2–J12,33
97–00	Y 5.7G (LS1)	25099771	1	3.33	SEAL, MASS AIR FLOW SEN	2–J12,25
97–01	Y	12377953	AR	*26.80	SEALER, OXY SEN (08.800)	
97–98	Y 5.7G (LS1)	25037062	1	29.44	SENSOR, ENG COOL TEMP (AC–DELCO #25037062)	1–H8,313
99–00	Y 5.7G (LS1)	15369305	1	27.37	SENSOR, ENG COOL TEMP (AC–DELCO #213–794)	1–I21,313
01–02	Y 5.7G (LS1)	15326388	1	20.87	SENSOR, ENG COOL TEMP (AC–DELCO #213–953)	1–I21,313
01–02	Y 5.7S (LS6)	15326388	1	20.87	SENSOR, ENG COOL TEMP (AC–DELCO #213–953)	1–I21,313
99	Y	16244511	1	58.88	SENSOR, FUEL PRESS	2–I9,82
97	Y 5.7G (LS1), (EXC LEADED FUEL EMIS EXPORT (NM8)	25312184	2	64.89	SENSOR, HTD OXY (PRE–CONVERTER) (AC–DELCO #AFS75) (OEM SENSOR)	2–K17,1
97	Y 5.7G (LS1), (EXC LEADED FUEL EMIS EXPORT (NM8)	25312202	2	147.72	SENSOR, HTD OXY (POST–CONVERTER) (AC–DELCO #AFS108)	2–K17,9

cardiagn.com

3.682 CONNECTOR – SEAL – SEALER – SENSOR, Computer Control Sensors (Con't)

98	Y 5.7G (LS1), (EXC LEADED FUEL EMIS EXPORT (NM8) .	25312184	2	64.89	SENSOR, HTD OXY (POSN 2) (ENG–OUT) (AC–DELCO #AFS75) (OEM SENSOR)	2–K17,1
98–99	Y 5.7G (LS1), (EXC LEADED FUEL EMIS EXPORT (NM8) .	25312202	2	147.72	SENSOR, HTD OXY (POSN 3) (CATALYST MONITORING) (POST–CONVERTER) (AC–DELCO #AFS108)	2–K17,9
99	Y 5.7G (LS1), CALIF EMIS, TIER 1 (NB6), FED EMIS SYS (NF2)	25312184	2	64.89	SENSOR, HTD OXY (POSN 2) (ENG–OUT) (AC–DELCO #AFS75) (OEM SENSOR)	2–K17,1
00	Y 5.7G (LS1), CALIF EMIS LEV (NC1), FED EMIS SYS (NF2)	25312184	2	64.89	SENSOR, HTD OXY (POSN 2) (ENG–OUT) (AC–DELCO #AFS75) (OEM SENSOR)	2–K17,1
00	Y CALIF EMIS LEV (NC1), FED EMIS SYS (NF2)	25317697	2	147.72	SENSOR, HTD OXY (POSN 3) (CATALYST MONITORING) (AC–DELCO #213–810)	2–K20,9
97–00	Y 5.7G (LS1)	12160244	1	15.25	SENSOR, INT AIR TEMP (AC–DELCO #213–243)	2–J12,23
97–02	Y 5.7G (LS1)	16212460	1	68.18	SENSOR, MAP (W/SEAL) (AC–DELCO #213–331)	2–I24,8
01	Y37 5.7S (LS6)	16212460	1	68.18	SENSOR, MAP (W/SEAL) (AC–DELCO #213–331)	2–I24,8
02	Y 5.7S (LS6)	16212460	1	68.18	SENSOR, MAP (W/SEAL) (AC–DELCO #213–331)	2–I24,8
97–00	Y 5.7G (LS1)	25179711	1	200.40	SENSOR, MASS AIRFLOW (AC–DELCO #213–353)	2–J12,26
01–02	Y	25318411	1	126.03	SENSOR, MASS AIRFLOW (AC–DELCO #213–364)	2–J24,18
02	Y 5.7S (LS6)	25341604	1		SENSOR, MASS AIRFLOW (AC–DELCO #213–1150)	2–K2,18
	*EXPORT****************EXPORT****************EXPORT****************EXPORT****************EXPORT*					
99	Y 5.7G (LS1), JAPANESE EMISSION (NA3), EUROPEAN EMISSION (NA7)	25312184	2	64.89	SENSOR, HTD OXY (POSN 2) (ENG–OUT) (AC–DELCO #AFS75) (OEM SENSOR)	2–K17,1
00	Y 5.7G (LS1), JAPANESE EMISSION (NA3), EUROPEAN EMISSION (NA7)	25312184	2	64.89	SENSOR, HTD OXY (POSN 2) (ENG–OUT) (AC–DELCO #AFS75) (OEM SENSOR)	2–K17,1
00	Y JAPANESE EMISSION (NA3), EUROPEAN EMISSION (NA7)	25317697	2	147.72	SENSOR, HTD OXY (POSN 3) (CATALYST MONITORING) (AC–DELCO #213–810)	2–K20,9
01–02	Y JAPANESE EMISSION (NA3), CALIF EMIS LEV (NC1), FEDERAL EMIS NLEV (NF7), EMISSION SYSTEM, EEC 00 (NT3)	25312184	2	64.89	SENSOR, HTD OXY (POSN 2) (ENG–OUT) (AC–DELCO #AFS75) (OEM SENSOR)	2–K17,1
01–02	Y JAPANESE EMISSION (NA3), CALIF EMIS LEV (NC1), FEDERAL EMIS NLEV (NF7), EMISSION SYSTEM, EEC 00 (NT3)	25317697	2	147.72	SENSOR, HTD OXY (POSN 3) (CATALYST MONITORING) (AC–DELCO #213–810)	2–K20,9

3.685 CONVERTER – PIPE, Catalytic Converter

97	Y LEADED FUEL EMIS EXPORT (NM8)	12534952	1	720.65	CONVERTER, OXIDN CTLTC (W/EXH PIPE)	2–K17,29
97–98	Y	88896438	1	1012.00	CONVERTER, OXIDN CTLTC (W/EXH PIPE)	2–K17,29

cardiagn.com

98	Y LEADED FUEL EMIS EXPORT (NM8)	12458423	1	1012.00	CONVERTER, OXIDN CTLTC (W/EXH PIPE)	2–K20,29
99	Y (EXC LEADED FUEL EMIS EXPORT (NM8)	88896488	1	1012.00	CONVERTER, OXIDN CTLTC (W/EXH PIPE)	2–K17,29
00	Y FED EMIS SYS (NF2)	88895875	1	1180.00	CONVERTER, OXIDN CTLTC (W/EXH PIPE)	2–K20,29
01	Y37 CALIF EMIS LEV (NC1), FEDERAL EMIS NLEV (NF7)	10426194	1	1299.00	CONVERTER, OXIDN CTLTC (W/EXH PIPE)	2–K20,29
02	YY37 CALIF EMIS LEV (NC1), FEDERAL EMIS NLEV (NF7)	10439825	1		PIPE, CTLTC CONV	2–K20,29
	*EXPORT**********EXPORT**********EXPORT**********EXPORT**********EXPORT*					
99	Y LEADED FUEL EXPORT EMIS (NM2)	12458423	1	1012.00	CONVERTER, OXIDN CTLTC (W/EXH PIPE)	2–K20,29
00	Y LEADED FUEL EXPORT EMIS (NM2)	12455777	1	1012.00	CONVERTER, OXIDN CTLTC (W/EXH PIPE)	2–K20,29
00	Y JAPANESE EMISSION (NA3), EUROPEAN EMISSION (NA7)	88895875	1	1180.00	CONVERTER, OXIDN CTLTC (W/EXH PIPE)	2–K20,29
01	Y07–67 JAPANESE EMISSION (NA3), CALIF EMIS LEV (NC1), FEDERAL EMIS NLEV (NF7), EMISSION SYSTEM, EEC 00 (NT3)	88895882	1	1429.00	CONVERTER, OXIDN CTLTC (W/EXH PIPE)	2–K20,29
01–02	Y07–67 LEADED FUEL EXPORT EMIS (NM2)	88895885	1	1047.00	CONVERTER, OXIDN CTLTC (W/EXH PIPE)	2–K20,29

3.690 SHIELD, Catalytic Converter

97–02	Y	10259597	LH	6.70	SHIELD, CTLTC CONV HT	2–K17,26
97–02	Y	10259598	RH	6.70	SHIELD, CTLTC CONV HT	2–K17,26

3.701 MUFFLER, Engine Exhaust

97–98	Y	12453571	LH	395.00	MUFFLER, EXH	2–K17,13
97–99	Y	12455774	RH	304.00	MUFFLER, EXH	2–K17,13
97–98	Y	88895874	LH	310.00	MUFFLER, EXH	2–K17,13
99	Y	12453571	LH	395.00	MUFFLER, EXH	2–K17,13
99	Y	88895874	LH	310.00	MUFFLER, EXH	2–K17,13
00	Y CALIF EMIS LEV (NC1)	12455778	RH	373.00	MUFFLER, EXH	2–K20,13
00	Y CALIF EMIS LEV (NC1)	12455779	LH	373.00	MUFFLER, EXH	2–K20,13
01	Y37 CALIF EMIS LEV (NC1), FEDERAL EMIS NLEV (NF7)	10303853	RH	1013.00	MUFFLER, EXH (W/TAIL PIPE) (1.1MM MUFFLER THICKNESS) .	2–K20,13
01	Y37 CALIF EMIS LEV (NC1), FEDERAL EMIS NLEV (NF7)	10303856	LH	1013.00	MUFFLER, EXH (W/TAIL PIPE) (.8MM THICKNESS OF MUFFLER)	2–K20,13
01–02	Y37 CALIF EMIS LEV (NC1), FEDERAL EMIS NLEV (NF7)	10318352	LH		MUFFLER, EXH (W/TAIL PIPE) (1.1MM THICKNESS OF MUFFLER)	2–K20,13
01–02	Y37 CALIF EMIS LEV (NC1), FEDERAL EMIS NLEV (NF7)	10318353	RH		MUFFLER, EXH (W/TAIL PIPE) (.8MM MUFFLER THICKNESS)	2–K20,13
	*EXPORT**********EXPORT**********EXPORT**********EXPORT**********EXPORT*					
00	Y JAPANESE EMISSION (NA3), EUROPEAN EMISSION (NA7), FED EMIS SYS (NF2)	12455774	RH	304.00	MUFFLER, EXH	2–K17,13
00	Y LEADED FUEL EXPORT EMIS (NM2)	12455774	RH	304.00	MUFFLER, EXH	2–K17,13

cardiagn.com

00	Y JAPANESE EMISSION (NA3), EUROPEAN EMISSION (NA7), FED EMIS SYS (NF2)	88895374	LH	310.00	MUFFLER, EXH	2-K17,13
00	Y LEADED FUEL EXPORT EMIS (NM2)	88895874	LH	310.00	MUFFLER, EXH	2-K17,13
01-02	Y07-67 JAPANESE EMISSION (NA3), CALIF EMIS LEV (NC1), FEDERAL EMIS NLEV (NF7), EMISSION SYSTEM, EEC 00 (NT3)	88895880	RH	563.00	MUFFLER, EXH	2-K20,13
01-02	Y07-67 JAPANESE EMISSION (NA3), CALIF EMIS LEV (NC1), FEDERAL EMIS NLEV (NF7), EMISSION SYSTEM, EEC 00 (NT3)	88895881	LH	563.00	MUFFLER, EXH	2-K20,13
01-02	Y07-67 LEADED FUEL EXPORT EMIS (NM2)	88895883	RH	530.00	MUFFLER, EXH	2-K20,13
01-02	Y07-67 LEADED FUEL EXPORT EMIS (NM2)	88895884	LH	530.00	MUFFLER, EXH	2-K20,13

3.704 GASKET – INSULATOR – REINFORCEMENT, Exhaust Muffler/Resonator

97-02	Y	10276792	2	5.75	GASKET, EXH MUFF (BLACK) ...	2-K17,12
97-00	Y	10421196	2	9.55	INSULATOR, EXH MUFF HNGR .	2-K17,19
01-02	Y	10429800	2	9.55	INSULATOR, EXH MUFF HNGR .	2-K20,19
97-02	Y	10294002	2	4.85	REINFORCEMENT, EXH MUFF HNGR	2-K17,17

3.705 MUFFLER – SHIELD – WASHER, Exhaust Tail Pipe

01	Y37 CALIF EMIS LEV (NC1), FEDERAL EMIS NLEV (NF7)	10303853	RH	1013.00	MUFFLER, EXH (W/TAIL PIPE) (1.1MM MUFFLER THICKNESS) (03.701)	2-K20,13
01	Y37 CALIF EMIS LEV (NC1), FEDERAL EMIS NLEV (NF7)	10303856	LH	1013.00	MUFFLER, EXH (W/TAIL PIPE) (.8MM THICKNESS OF MUFFLER) (03.701)	2-K20,13
01-02	Y37 CALIF EMIS LEV (NC1), FEDERAL EMIS NLEV (NF7)	10318352	LH		MUFFLER, EXH (W/TAIL PIPE) (1.1MM THICKNESS OF MUFFLER) (03.701)	2-K20,13
01-02	Y37 CALIF EMIS LEV (NC1), FEDERAL EMIS NLEV (NF7)	10318353	RH		MUFFLER, EXH (W/TAIL PIPE) (.8MM MUFFLER THICKNESS) (03.701)	2-K20,13
97-02	Y	10295396	2	6.55	SHIELD, EXH MUFF RR HT	2-K17,14
97-02	Y	25525493	6	.56	WASHER, EXH MUFF H/SHLD BRKT (SPR, CUP, 5.2X27.0X0.254, 4.5 TALL, SS, PL) (03.613)	2-K17,16

3.883 SWITCH, Cruise Control Selector

97-02	Y	26075870	1	213.71	SWITCH, HDLP & T/SIG & CRCONT (W/ LVR) (02.485) (AC-DELCO #D1512G)	2-K7,16

cardiagn.com

3.885 RETAINER, Cruise Control

97–00	Y 6–SPD M/TRANS (MM6) ..	10194431	1	*1.13	RETAINER, CRCONT VAC REL VLV	2–K7,20
01–02	Y07–67 5.7G (LS1), 6–SPD M/TRANS (MM6)	10194431	1	*1.13	RETAINER, CRCONT VAC REL VLV	2–K7,20
01–02	Y37 5.7S (LS6), MANUAL 6 SPD O/D TRANS, TREMEC (M12)	10194431	1	*1.13	RETAINER, CRCONT VAC REL VLV	2–K7,20

3.887 BOLT – BRACKET – CONNECTOR – SWITCH, Cruise Control

02	Y 6–SPD M/TRANS (MM6), MANUAL 6 SPD O/D TRANS, TREMEC (M12)	11514139	2	*1.08	BOLT, CRCONT REL SW BRKT (M6X1X25) (08.900)	
97–00	Y 6–SPD M/TRANS (MM6) ..	12555049	1	5.62	BRACKET, CRCONT REL SW ...	2–K7,21
01	Y 6–SPD M/TRANS (MM6), MANUAL 6 SPD O/D TRANS, TREMEC (M12)	12555049	1	5.62	BRACKET, CRCONT REL SW ...	2–K7,21
02	Y 6–SPD M/TRANS (MM6), MANUAL 6 SPD O/D TRANS, TREMEC (M12)	12555049	1	5.62	BRACKET, CRCONT REL SW ...	2–K7,21
97–02	Y	12126463	1	45.66	CONNECTOR, SW–CRCONT REL (BLACK) (2–WAY F) (W/LEADS) (02.530) (AC–DELCO #PT733)	2–K7,18
97	Y 6–SPD M/TRANS (MM6) ..	22584374	1	9.28	SWITCH, CRCONT REL (W/O RET)	2–K7,19
98	Y 6–SPD M/TRANS (MM6) ..	22584374	1	9.28	SWITCH, CRCONT REL (W/O RET)	2–K7,19
99–00	Y 6–SPD M/TRANS (MM6) ..	10426455	1	9.11	SWITCH, CRCONT REL	2–K7,19
01–02	Y07–67 6–SPD M/TRANS (MM6)	10426455	1	9.11	SWITCH, CRCONT REL	2–K7,19
01–02	Y37	10426455	1	9.11	SWITCH, CRCONT REL	2–K7,19

3.890 BRACKET – FILTER – STUD, Engine Fuel Filter

97–98	Y	10253390	1	3.33	BRACKET, FUEL FLTR	2–I4,31
99–02	Y	25121521	1	3.33	BRACKET, FUEL FLTR	2–I9,31
97–98	Y 5.7G (LS1)	10287788	1	N.L.	FILTER, FUEL (W/BRKT) (AC–DELCO #GF820)	2–I4,30
99–02	Y	10299146	1	N.L.	FILTER, FUEL (W/PRESSURE REGULATOR) (AC–DELCO #GF822)	2–I9,30
97–02	Y	10278878	1	.29	STUD, FUEL FLTR BRKT (02.559)	2–I4,32

3.900 MODULE – MODULE KIT – RELAY, Fuel Pump

97–99	Y	88896043	RH	354.00	MODULE KIT, F/TNK F/PMP (03.107) (AC–DELCO #MU1007)	2–I4,19
00–02	Y	12459861	LH	488.80	MODULE KIT, F/TNK F/PMP (INCLS FUEL METER) (03.107) (AC–DELCO #MU1001)	2–I14,38
00–02	Y	88895126	RH	358.00	MODULE KIT, F/TNK F/PMP (INCLS FUEL METER) (03.107) (AC–DELCO #MU1004)	2–I14,19
97–99	Y	12455734	LH	DISCON	MODULE, F/TNK F/PMP (03.107)	
97–99	Y	12458243	LH	493.50	MODULE, F/TNK F/PMP (03.107) (AC–DELCO #MU245)	2–I4,39
97–02	Y	12088567	1	16.45	RELAY, F/PMP (GRAY) (4–WAY) (09.277) (AC–DELCO #15–8571)	2–G10,55

cardiagn.com

TRANSMISSION AND ENGINE USAGE

1997 - 2000

VIN CODE	CUBIC DISP	LITER TYPE	ENGINE TYPE	FUEL TYPE	ENGINE OPT.	SERIES USAGE	TRANSMISSION USAGE
G	350	5.7	V8	SFI	LS1	Y	M30,MM6

AUTO TRANS.			MAN. TRANS.	
M30	4L60E	4 SPEED	MM6	6 SPEED

cardiagn.com

TRANSMISSION IDENTIFICATION

(INCLUDING AXLE RATION)

TRANSMISSION TO ASSEMBLY CODES

NOTE: Transmission Identification can be located in one of three positions on the transmission.
A: Identification plate on side of case
B: Stamping number on governor cover
C: Ink stamped on bell housing

1997

M30 - 4 SPEED A.T. 4L60E	MM6 - 6 SPEED M.T.
7YYD	DCW

1998

M30 - 4 SPEED A.T. 4L60E	MM6 - 6 SPEED M.T.
8YDD	DCW 0446

1999

M30 - 4 SPEED A.T. 4L60E	MM6 - 6 SPEED M.T.
9YDD	DCW 0446

2000

M30 - 4 SPEED A.T. 4L60E	MM6 - 6 SPEED M.T.
0YDD	3408

2001

M30 - 4 SPEED A.T. 4L60E	MM6 - 6 SPEED M.T.	M12 - 6 SPEED M.T.
3137 - 2.73 3138 - 3.15 1YDD	3408 - 3.42 3409 - 3.42 3410 3411	1854 - 3.42 RATIO DXB

2002

M30 - 4 SPEED A.T. 4L60E	MM6 - 6 SPEED M.T.	M12 - 6 SPEED M.T.
8506 - 2.73 3507 - 3.15 2YDD	0233 - 3.42 0234 - 3.42	2682 - 3.42 RATIO DXB DFR DFS

cardiagn.com

4.003 TRANSMISSION, Manual (6-Speed)

97	Y 6-SPD M/TRANS (MM6) ..	12563410	1	3992.86	TRANSMISSION, MAN	2-L4
98-01	Y 6-SPD M/TRANS (MM6), (EXC EUROPEAN PROVISIONS (VD1) (EXPORT)	12563410	1	3992.86	TRANSMISSION, MAN	2-L4
01-02	YY37 5.7S (LS6), MANUAL 6 SPD O/D TRANS, TREMEC (M12)	12561852	1	3564.29	TRANSMISSION, MAN	2-L12
02	Y 6-SPD M/TRANS (MM6), (EXC EUROPEAN PROVISIONS (VD1) (EXPORT)	12570231	1	3992.86	TRANSMISSION, MAN	2-L4
	*EXPORT**********EXPORT**********EXPORT**********EXPORT**********EXPORT*					
98-02	Y 6-SPD M/TRANS (MM6), EUROPEAN PROVISIONS (VD1) (EXPORT)	12563411	1	3992.86	TRANSMISSION, MAN	2-L4

4.004 CONTROL, Transmission Shift Control

97-02	Y 6-SPD M/TRANS (MM6) ..	12560342	1	250.45	CONTROL, M/TRNS (W/O SHFT PATT)	2-L20,8
01-02	Y37 5.7S (LS6), MANUAL 6 SPD O/D TRANS, TREMEC (M12)	12563853	1	248.49	CONTROL, M/TRNS (W/O SHFT PATT)	2-L20,8

4.006 INSERT - KNOB - PUSHBUTTON, Transmission Gearshift Control

97-00	Y 6-SPD M/TRANS (MM6) ..	10150014	1	*4.48	INSERT, M/TRNS CONT LVR KNOB	2-L20,2
01-02	Y 6-SPD M/TRANS (MM6), MANUAL 6 SPD O/D TRANS, TREMEC (M12)	10150014	1	*4.48	INSERT, M/TRNS CONT LVR KNOB	2-L20,2
97	Y 6-SPD M/TRANS (MM6) ..	12551768	1	59.72	KNOB, M/TRNS CONT LVR (W/SHFT PATT) (NOTE:FOR SHFT PATT ORDER PUSHBUTTON 12551771)	2-L20,3
98	Y 6-SPD M/TRANS (MM6), (EXC INDY PACE CAR (Z4Z)	12559931	1	62.40	KNOB, M/TRNS CONT LVR (W/SHFT PATT) (NOTE:FOR SHFT PATT ORDER PUSHBUTTON 12551771)	2-L20,3
98	Y67 6-SPD M/TRANS (MM6), INDY PACE CAR (Z4Z)	12560119	1	62.11	KNOB, M/TRNS CONT LVR (W/SHFT PATT) (NOTE:FOR SHFT PATT ORDER PUSHBUTTON 12551771)	2-L20,3
99-00	Y 6-SPD M/TRANS (MM6) ..	12559931	1	62.40	KNOB, M/TRNS CONT LVR (W/SHFT PATT) (NOTE:FOR SHFT PATT ORDER PUSHBUTTON 12551771)	2-L20,3
01-02	Y 6-SPD M/TRANS (MM6), MANUAL 6 SPD O/D TRANS, TREMEC (M12)	12559931	1	62.40	KNOB, M/TRNS CONT LVR (W/SHFT PATT) (NOTE:FOR SHFT PATT ORDER PUSHBUTTON 12551771)	2-L20,3
97-00	Y 6-SPD M/TRANS (MM6) ..	12551771	1	10.87	PUSHBUTTON, M/TRNS CONT LVR REL (W/SHFT PATT)	2-L20,1
01-02	Y 6-SPD M/TRANS (MM6), MANUAL 6 SPD O/D TRANS, TREMEC (M12)	12551771	1	10.87	PUSHBUTTON, M/TRNS CONT LVR REL (W/SHFT PATT)	2-L20,1

cardiagn.com

4.010 BOLT, Transmission Control Lever

97-02	Y 6-SPD M/TRANS (MM6) ..	15546805	4	3.33	BOLT, M/TRNS CONT LVR HSG (M8X1.25X20) (04.012)	2-L4,47
01-02	YY37 MANUAL 6 SPD O/D TRANS, TREMEC (M12)	15546805	1	3.33	BOLT, M/TRNS CONT LVR HSG (M8X1.25X20) (04.012)	2-L4,47

4.012 BOLT, Transmission Control

97-00	Y 6-SPD M/TRANS (MM6) ..	12553719	3	4.55	BOLT, M/TRNS CONT (TORX, M8X1.25X27)	2-L20,7
01-02	Y 6-SPD M/TRANS (MM6), MANUAL 6 SPD O/D TRANS, TREMEC (M12)	12553719	3	4.55	BOLT, M/TRNS CONT (TORX, M8X1.25X27)	2-L20,7

4.015 BOOT – RETAINER, Transmission Control Lever

97	Y 6-SPD M/TRANS (MM6) ..	10433159	1	94.12	BOOT, M/TRNS CONT LVR (USED W/LEATHER TRIM)	2-L20,12
97-00	Y 6-SPD M/TRANS (MM6) ..	12555226	1	16.36	BOOT, M/TRNS CONT LVR (SHIFTER TO BODY TUNNEL) .	2-L20,10
98	Y 6-SPD M/TRANS (MM6), (EXC INDY PACE CAR (Z4Z)	10433159	1	94.12	BOOT, M/TRNS CONT LVR (USED W/LEATHER TRIM)	2-L20,12
98	Y37 6-SPD M/TRANS (MM6), INDY PACE CAR (Z4Z)	10298248	1	62.11	BOOT, M/TRNS CONT LVR	2-L20,12
99-02	Y 6-SPD M/TRANS (MM6) .	10433159	1	94.12	BOOT, M/TRNS CONT LVR (USED W/LEATHER TRIM)	2-L20,12
01-02	Y MANUAL 6 SPD O/D TRANS, TREMEC (M12) ...	10433159	1	94.12	BOOT, M/TRNS CONT LVR (USED W/LEATHER TRIM)	2-L20,12
01-02	Y 6-SPD M/TRANS (MM6 MANUAL 6 SPD O/D TRANS TREMEC (M12)	12555226	1	16.36	BOOT, M/TRNS CONT LVR (SHIFTER TO BODY TUNNEL) .	2-L20,10
97-00	Y 6-SPD M/TRANS (MM6) ..	10028352	8	*.91	RETAINER, M/TRNS CONT LVR BOOT (04.006)	2-L20,13
01-02	Y07-67 6-SPD M/TRANS (MM6)	10028352	8	*.91	RETAINER, M/TRNS CONT LVR BOOT (04.006)	2-L20,13
01-02	Y37 MANUAL 6 SPD O/D TRANS, TREMEC (M12)	10028352	8	*.91	RETAINER, M/TRNS CONT LVR BOOT (04.006)	2-L20,13

4.035 ROD, Transmission shift Shaft Lever

97-00	Y 6-SPD M/TRANS (MM6) ..	12554740	1	146.81	ROD, M/TRNS SHFT LVR	[illegible]-L20,5
01-02	Y 6-SPD M/TRANS (MM6), MANUAL 6 SPD O/D TRANS, TREMEC (M12)	12554740	1	146.81	ROD, M/TRNS SHFT LVR	[illegible]-L20,5

4.053 CONNECTOR, Transmission Shift/Brake Interlock

97-02	Y	12101857	1	19.28	CONNECTOR, SOL-A/TRNS SHFT LK CONT (WHITE) (2-WAY F, W/LEADS) (02.535) (AC-DELCO #PT249)	
97-02	Y	12101857	1	19.28	CONNECTOR, SOL-A/TRNS SHFT LK CONT (WHITE) (2-WAY F, W/LEADS) (02.535) (AC-DELCO #PT249)	

cardiagn.com

4.054 CONNECTOR – SWITCH, Safety Starting Switch Or Speed Sensing

98–99	Y	12101899	1	18.52	CONNECTOR, SW–A/TRNS FLUID TEMP IND (BLACK) (2–WAY F W/LEADS) (02.383) (AC–DELCO #PT169)	
01–02	Y	12101899	1	18.52	CONNECTOR, SW–A/TRNS FLUID TEMP IND (BLACK) (2–WAY F W/LEADS) (02.383) (AC–DELCO #PT169)	
97–02	Y	12102690	1	15.67	CONNECTOR, SW–CLU PED POSN (BLUE) (2–WAY F) (W/LEADS) (AC–DELCO #PT357)	2–K7,25
97–00	Y 6–SPD M/TRANS (MM6)	14094368	1	8.11	SWITCH, CLU PED POSN (AC–DELCO #D2214A)	2–K7,24
01–02	Y 6–SPD M/TRANS (MM6), MANUAL 6 SPD O/D TRANS, TREMEC (M12)	14094368	1	8.11	SWITCH, CLU PED POSN (AC–DELCO #D2214A)	2–K7,24

4.081 MOUNT, Transmission Mounting

97–02	Y 6–SPD M/TRANS (MM6)	22178940	1	89.50	MOUNT, TRANS	3–E4,2
01–02	Y MANUAL 6 SPD O/D TRANS, TREMEC (M12)	22178940	1	89.50	MOUNT, TRANS	3–E4,2

4.083 ADAPTER – BOLT – BRACKET – PLATE, Transmission Mounting Support

97–02	Y 6–SPD M/TRANS (MM6)	12458098	1	48.00	ADAPTER, TRANS	3–J4,12
01–02	YY MANUAL 6 SPD O/D TRANS, TREMEC (M12)	12458098	1	48.00	ADAPTER, TRANS	3–J4,12
97–02	Y 6–SPD M/TRANS (MM6)	12458099	2	3.33	BOLT, TRANS ADAP (M6X13)	2–L4,178
97–02	Y 6–SPD M/TRANS (MM6)	12523235	11	4.65	BOLT, TRANS ADAP (M10X1.5–40MM) (00.683)	2–L4,178
01–02	YY MANUAL 6 SPD O/D TRANS, TREMEC (M12)	12458099	2	3.33	BOLT, TRANS ADAP (M6X13)	2–L4,178
01–02	YY37 MANUAL 6 SPD O/D TRANS, TREMEC (M12)	12523235	11	4.65	BOLT, TRANS ADAP (M10X1.5–40MM) (00.683)	2–L4,178
97–02	Y 6–SPD M/TRANS (MM6)	10283879	1	24.00	BRACKET, TRANS MT	3–E4,7
01–02	Y MANUAL 6 SPD O/D TRANS, TREMEC (M12)	10283879	1	24.00	BRACKET, TRANS MT	3–E4,7
97–02	Y 6–SPD M/TRANS (MM6)	12455019	1	296.00	PLATE, TRANS FRT ADAP	2–L4,1
01–02	YY37 MANUAL 6 SPD O/D TRANS, TREMEC (M12)	12455019	1	296.00	PLATE, TRANS FRT ADAP	2–L4,1

4.085 NUT – STUD, Transmission Mount and Support

97–02	Y 6–SPD M/TRANS (MM6)	10250686	2	3.33	NUT, TRANS MT (BOTTOM) (M10X1.5) (PREV TORQUE LRG FLANGED) (07.242)	3–E4,4
01–02	Y MANUAL 6 SPD O/D TRANS, TREMEC (M12)	10250686	2	3.33	NUT, TRANS MT (BOTTOM) (M10X1.5) (PREV TORQUE LRG FLANGED) (07.242)	3–E4,4
97–02	Y 6–SPD M/TRANS (MM6)	[illegible]		[illegible]	STUD, TRANS (M10X8)	3–J4,11
97–02	Y 6–SPD M/TRANS (MM6)	88984492	1		STUD, TRANS (10X33)	3–J4,11
97–02	Y 4–SPD A/TRANS (M30)	88984492	1		STUD, TRANS (10X33)	3–J4,11
01–02	YY MANUAL 6 SPD O/D TRANS, TREMEC (M12)	12458100	1	3.33	STUD, TRANS (M10X8)	3–J4,11
01–02	YY MANUAL 6 SPD O/D TRANS, TREMEC (M12)	88984492	1		STUD, TRANS (10X33)	3–J4,11

cardiagn.com

4.085 NUT – STUD, Transmission Mount and Support (Con't)

97–00	Y 6–SPD M/TRANS (MM6) ..	12553527	1	4.55	STUD, TRANSAXLE (1 O'CLOCK POSN, RR VIEW)	3–F21,7
01–02	Y 6–SPD M/TRANS (MM6), MANUAL 6 SPD O/D TRANS, TREMEC (M12)	12553527	1	4.55	STUD, TRANSAXLE (1 O'CLOCK POSN, RR VIEW)	3–F21,7

4.103 CASE, Transmission Case

97–02	Y 6–SPD M/TRANS (MM6) ..	12523067	1	944.00	CASE, TRANS	2–L4,44
01–02	YY37 MANUAL 6 SPD O/D TRANS, TREMEC (M12)	12523067	1	944.00	CASE, TRANS	2–L4,44

4.104 CLIP – PIN – PIPE – PLUG – VENT, Transmission Case

97–02	Y 6–SPD M/TRANS (MM6) ..	12455047	1	3.33	CLIP, TRANS VENT HOSE	2–L4,161
01–02	YY37 MANUAL 6 SPD O/D TRANS, TREMEC (M12)	12455047	1	3.33	CLIP, TRANS VENT HOSE	2–L4,161
97–02	Y 6–SPD M/TRANS (MM6) ..	12523068	2	3.52	PIN, TRANS CASE LOC (DOWEL) (00.685)	2–L4,58
01–02	YY37 MANUAL 6 SPD O/D TRANS, TREMEC (M12)	12523068	2	3.52	PIN, TRANS CASE LOC (DOWEL) (00.685)	2–L4,58
97–02	Y 6–SPD M/TRANS (MM6) ..	12455049	1	11.65	PIPE, TRANS VENT	2–L4,161
01–02	YY37 MANUAL 6 SPD O/D TRANS, TREMEC (M12)	12455049	1	11.65	PIPE, TRANS VENT	2–L4,161
97–02	Y 6–SPD M/TRANS (MM6) ..	12387621	1	4.55	PLUG, TRANS FRT ADAPT INSP (08.971)	2–L4,101
01–02	YY37 MANUAL 6 SPD O/D TRANS, TREMEC (M12)	12387621	1	4.55	PLUG, TRANS FRT ADAPT INSP (08.971)	2–L4,101
97–02	Y 6–SPD M/TRANS (MM6) ..	12523294	1	6.33	VENT, M/TRNS	2–L4,180
01	YY37 MANUAL 6 SPD O/D TRANS, TREMEC (M12)	12523294	1	6.33	VENT, M/TRNS	2–L4,180

4.105 COVER – MAGNET – PLATE, Transmission Case

97–98	Y 5.7G (LS1)	12562042	RH	4.55	COVER, TRANS (AC–DELCO #12562042)	1–J2,460
97–02	Y 6–SPD M/TRANS (MM6) ..	12386078	2	4.55	MAGNET, TRANS (AC–DELCO #12386078)	2–L4,57
01–02	YY37 MANUAL 6 SPD O/D TRANS, TREMEC (M12)	12386078	2	4.55	MAGNET, TRANS (AC–DELCO #12386078)	2–L4,57
97–02	Y 6–SPD M/TRANS (MM6) ..	12455046	1	37.25	PLATE, TRANS FRT SHIFTER CVR .	2–L4,198
01–02	YY37 MANUAL 6 SPD O/D TRANS, TREMEC (M12)	12455046	1	37.25	PLATE, TRANS FRT SHIFTER CVR .	2–L4,198

4.302 COLLAR – LEVER – PIN, Transmission Rail End

97–02	Y 6–SPD M/TRANS (MM6) ..	12523203	1	4.55	COLLAR, TRANS REV SHFT LVR	2–L4,142
01	YY37 MANUAL 6 SPD O/D TRANS, TREMEC (M12)	12523203	1	4.55	COLLAR, TRANS REV SHFT LVR	2–L4,142
97–02	Y 6–SPD M/TRANS (MM6) ..	12455056	1	88.00	LEVER, OFFSET SHFT	2–L4,56
97–02	Y 6–SPD M/TRANS (MM6) ..	12523205	1	46.45	LEVER, OFFSET SHFT (REV) . ..	2–L4,148
01	YY37 MANUAL 6 SPD O/D TRANS, TREMEC (M12)	12523205	1	46.45	LEVER, OFFSET SHFT (REV)	2–L4,148
97–02	Y 6–SPD M/TRANS (MM6) ..	12455033	1	89.08	LEVER, SKIP SHFT LVR	2–L4,183
01–02	YY37 MANUAL 6 SPD O/D TRANS, TREMEC (M12)	12455033	1	89.08	LEVER, SKIP SHFT LVR	2–L4,183
97–02	Y 6–SPD M/TRANS (MM6) ..	12523204	1	113.00	LEVER, TRANS 5TH & 6TH SHFT	2–L4,144
01	YY37 MANUAL 6 SPD O/D TRANS, TREMEC (M12)	12523204	1	113.00	LEVER, TRANS 5TH & 6TH SHFT	2–L4,144
97–02	Y 6–SPD M/TRANS (MM6) ..	12523211	1	31.00	PIN, CONT SEL ARM	2–L4,155

cardiagn.com

4.302 COLLAR – LEVER – PIN, Transmission Rail End (Con't)

01	YY37 MANUAL 6 SPD O/D TRANS, TREMEC (M12)	12523211	1	31.00	PIN, CONT SEL ARM	2-L4,155
97-02	Y 6-SPD M/TRANS (MM6) ..	454512	1	*1.24	PIN, REV SHFT COLR (3/16 X 13/16 ROLL) (08.939)	2-L4,141
01	YY37 MANUAL 6 SPD O/D TRANS, TREMEC (M12)	454512	1	*1.24	PIN, REV SHFT COLR (3/16 X 13/16 ROLL) (08.939)	2-L4,141

4.303 BOLT – CAM – FORK – PIN – SPRING – WASHER, Transmission Internal Shift

97-02	Y 6-SPD M/TRANS (MM6) ..	12523243	2	4.55	BOLT, SHFT GDE PLT	2-L4,133
01-02	YY37 MANUAL 6 SPD O/D TRANS, TREMEC (M12)	12523243	2	4.55	BOLT, SHFT GDE PLT	2-L4,133
97-02	Y 6-SPD M/TRANS (MM6) ..	12455029	1	42.75	CAM, SHFT SHF DTNT	2-L4,1
01-02	YY37 MANUAL 6 SPD O/D TRANS, TREMEC (M12)	12455029	1	42.75	CAM, SHFT SHF DTNT	2-L4,1
97-02	Y 6-SPD M/TRANS (MM6) ..	12523288	1	47.75	FORK, REV SHFT	2-L4,111
01-02	YY37 MANUAL 6 SPD O/D TRANS, TREMEC (M12)	12523288	1	47.75	FORK, REV SHFT	2-L4,111
97-02	Y 6-SPD M/TRANS (MM6) ..	12523210	1	20.95	FORK, 1ST & 2ND SHFT	2-L4,150
01-02	YY37 MANUAL 6 SPD O/D TRANS, TREMEC (M12)	12523210	1	20.95	FORK, 1ST & 2ND SHFT	2-L4,150
97-02	Y 6-SPD M/TRANS (MM6) ..	12523207	1	20.95	FORK, 3RD & 4TH SHFT	2-L4,158
01-02	YY37 MANUAL 6 SPD O/D TRANS, TREMEC (M12)	12523207	1	20.95	FORK, 3RD & 4TH SHFT	2-L4,158
97-02	Y 6-SPD M/TRANS (MM6) ..	12523258	1	30.50	FORK, 5TH & 6TH SHFT	2-L4,122
01-02	YY37 MANUAL 6 SPD O/D TRANS, TREMEC (M12)	12523258	1	30.50	FORK, 5TH & 6TH SHFT	2-L4,122
97-02	Y 6-SPD M/TRANS (MM6) ..	12455030	1	3.33	PIN, SHFT SHF DTNT CAM PIV ..	2-L4,1
01-02	YY37 MANUAL 6 SPD O/D TRANS, TREMEC (M12) ...	12455030	1	3.33	PIN, SHFT SHF DTNT CAM PIV ..	2-L4,1
97-02	Y 6-SPD M/TRANS (MM6) ..	12455031	1	21.78	SPRING, SHFT SHF DTNT CAM .	2-L4,1
01-02	YY37 MANUAL 6 SPD O/D TRANS, TREMEC (M12)	12455031	1	21.78	SPRING, SHFT SHF DTNT CAM .	2-L4,1
97-02	Y 6-SPD M/TRANS (MM6) ..	12455032	1	3.33	WASHER, SHFT SHF DTNT CAM	2-L4,1
01-02	YY37 MANUAL 6 SPD O/D TRANS, TREMEC (M12)	12455032	1	3.33	WASHER, SHFT SHF DTNT CAM	2-L4,1

4.307 BOLT – LOCKOUT – PIN – PLATE – SEAL – SOLENOID, Transmission Internal Shift

97-02	Y 6-SPD M/TRANS (MM6) ..	12523302	1	4.55	BOLT, REV LOCKOUT MTG	2-L4,90
01-02	YY37 MANUAL 6 SPD O/D TRANS, TREMEC (M12)	12523302	1	4.55	BOLT, REV LOCKOUT MTG	2-L4,90
97-02	Y 6-SPD M/TRANS (MM6) ..	12455048	4	3.33	BOLT, REV LOCKOUT SOL CVR (M8X1.25)	2-L4,197
01-02	YY37 MANUAL 6 SPD O/D TRANS, TREMEC (M12)	12455048	4	3.33	BOLT, REV LOCKOUT SOL CVR (M8X1.25)	2-L4,197
97-02	Y 6-SPD M/TRANS (MM6) ..	12523299	1	224.00	LOCKOUT, REV	2-L4,91
01-02	YY37 MANUAL 6 SPD O/D TRANS, TREMEC (M12)	12523299	1	224.00	LOCKOUT, REV	2-L4,91
97-02	Y 6-SPD M/TRANS (MM6) ..	454512	1	*1.24	PIN, 1ST & 2ND SHFT FORK (3/16 X 13/16 ROLL) (08.939)	2-L4,182
01-02	YY37 MANUAL 6 SPD O/D TRANS, TREMEC (M12)	454512	1	*1.24	PIN, 1ST & 2ND SHFT FORK (3/16 X 13/16 ROLL) (08.939)	2-L4,182
97-02	Y 6-SPD M/TRANS (MM6) ..	12523209	1	11.65	PLATE, SHFT INTLK (HELD INTO INTERLOCK PLATE)	2-L4,157
97-02	Y 6-SPD M/TRANS (MM6) ..	12523212	1	30.93	PLATE, SHFT INTLK (GEAR SELECT) (HOLDS INTERLOCK PLATES)	2-L4,156

cardiagn.com

4.307 BOLT – LOCKOUT – PIN – PLATE – SEAL – SOLENOID, Transmission Internal Shift (Con't)

01–02	YY37 MANUAL 6 SPD O/D TRANS, TREMEC (M12)	12523209	1	11.65	PLATE, SHFT INTLK (HELD INTO INTERLOCK PLATE)	2–L4,157
01–02	YY37 MANUAL 6 SPD O/D TRANS, TREMEC (M12)	12523212	1	30.93	PLATE, SHFT INTLK (GEAR SELECT) (HOLDS INTERLOCK PLATES)	2–L4,156
97–02	Y 6–SPD M/TRANS (MM6) ..	12523301	1	4.55	SEAL, REV LOCKOUT (O RING) .	2–L4,160
01–02	YY37 MANUAL 6 SPD O/D TRANS, TREMEC (M12)	12523301	1	4.55	SEAL, REV LOCKOUT (O RING) .	2–L4,160
97–02	Y 6–SPD M/TRANS (MM6) ..	12523293	1	4.55	SEAL, REV LOCKOUT SOL (O RING)	2–L4,181
01–02	YY37 MANUAL 6 SPD O/D TRANS, TREMEC (M12)	12523293	1	4.55	SEAL, REV LOCKOUT SOL (O RING)	2–L4,181
97–02	Y 6–SPD M/TRANS (MM6) ..	12523300	1	88.50	SOLENOID, REV LOCKOUT	2–L4,89
01–02	YY37 MANUAL 6 SPD O/D TRANS, TREMEC (M12)	12523300	1	88.50	SOLENOID, REV LOCKOUT	2–L4,89
97–02	Y 6–SPD M/TRANS (MM6) ..	12523292	1	81.65	SOLENOID, SKIP SHFT	2–L4,181
01–02	YY37 MANUAL 6 SPD O/D TRANS, TREMEC (M12)	12523292	1	81.65	SOLENOID, SKIP SHFT	2–L4,181

4.309 BOLT – BUSHING – SEAL – SHAFT, Transmission Internal Shift Shaft

97–02	Y 6–SPD M/TRANS (MM6) ..	12523213	2	*4.55	BOLT, REV SHFT SHF GDE	2–L4,46
01–02	YY37 MANUAL 6 SPD O/D TRANS, TREMEC (M12)	12523213	2	*4.55	BOLT, REV SHFT SHF GDE	2–L4,46
97–02	Y 6–SPD M/TRANS (MM6) ..	12523001	2	4.55	BUSHING, TOP SHFT RL	2–L4,5
01–02	YY37 MANUAL 6 SPD O/D TRANS, TREMEC (M12)	12523001	2	4.55	BUSHING, TOP SHFT RL	2–L4,5
97–02	Y 6–SPD M/TRANS (MM6) ..	12455028	1	6.65	SEAL, SHFT SHF INR	2–L4,184
01–02	YY37 MANUAL 6 SPD O/D TRANS, TREMEC (M12)	12455028	1	6.65	SEAL, SHFT SHF INR	2–L4,184
97–02	Y 6–SPD M/TRANS (MM6) ..	12455027	1	*2.85	SEAL, SHFT SHF OTR	2–L4,185
01–02	YY37 MANUAL 6 SPD O/D TRANS, TREMEC (M12)	12455027	1	*2.85	SEAL, SHFT SHF OTR	2–L4,185
97–02	Y 6–SPD M/TRANS (MM6) ..	12455014	1	67.22	SHAFT, 1ST & 2ND & 3RD & 4TH SHFT	2–L4,153
01–02	YY37 MANUAL 6 SPD O/D TRANS, TREMEC (M12)	12455014	1	67.22	SHAFT, 1ST & 2ND & 3RD & 4TH SHFT	2–L4,153
97–02	Y 6–SPD M/TRANS (MM6) ..	12523202	1	19.20	SHAFT, 5TH & 6TH & REV SHFT .	2–L4,143
01	YY37 MANUAL 6 SPD O/D TRANS, TREMEC (M12)	12523202	1	19.20	SHAFT, 5TH & 6TH & REV SHFT .	2–L4,143

4.311 DETENT – PLATE – SPRING, Transmission Shift Shaft Detent

01–02	YY37 MANUAL 6 SPD O/D TRANS, TREMEC (M12)	12455056	1	88.00	DETENT, SHFT INTLK (04.302) ..	2–L12,56
97–02	Y 6–SPD M/TRANS (MM6) ..	12523236	1	32.50	PLATE, SHFT GDE DTNT	2–L4,55
01–02	YY37 MANUAL 6 SPD O/D TRANS, TREMEC (M12)	12523236	1	32.50	PLATE, SHFT GDE DTNT	2–L4,55
97–02	Y 6–SPD M/TRANS (MM6) ..	12523242	1	3.54	SPRING, SHFT DTNT BALL	2–L4,52
01–02	YY37 MANUAL 6 SPD O/D TRANS, TREMEC (M12)	12523242	1	3.54	SPRING, SHFT DTNT BALL	2–L4,52

4.312 INSERT – RING, Transmission Internal Shift Fork

97–02	Y 6–SPD M/TRANS (MM6) ..	12523233	2	*.81	INSERT, REV SHFT FORK	2–L4,112
97–02	Y 6–SPD M/TRANS (MM6) ..	12523208	2	*.68	INSERT, 1ST & 2ND SHFT FORK	2–L4,159
01–02	YY37 MANUAL 6 SPD O/D TRANS, TREMEC (M12)	12523208	2	*.68	INSERT, 1ST & 2ND SHFT FORK	2–L4,159
97–02	Y 6–SPD M/TRANS (MM6) .	12523208	2	*.68	INSERT, 3RD & 4TH SHFT FORK	2–L4,159

cardiagn.com

4.312 INSERT – RING, Transmission Internal Shift Fork (Con't)

01-02	YY37 MANUAL 6 SPD O/D TRANS, TREMEC (M12)	12523208	2	*.68	INSERT, 3RD & 4TH SHFT FORK	2-L4,159
97-02	Y 6-SPD M/TRANS (MM6) ..	12523233	2	*.81	INSERT, 5TH & REV SHFT FORK	2-L4,112
01-02	YY37 MANUAL 6 SPD O/D TRANS, TREMEC (M12)	12523233	2	*.81	INSERT, 5TH & REV SHFT FORK	2-L4,112
97-02	Y 6-SPD M/TRANS (MM6) ..	12523233	2	*.81	INSERT, 5TH & 6TH SHFT FORK .	2-L4,112
97-02	Y 6-SPD M/TRANS (MM6) ..	12523055	1	*.85	RING, REV SHFT FORK RET (04.422)	2-L4,113
01-02	YY37 MANUAL 6 SPD O/D TRANS, TREMEC (M12)	12523055	1	*.85	RING, REV SHFT FORK RET (04.422)	2-L4,113

4.317 BEARING – EXTENSION – STUD, Transmission Case Extension

97-02	Y 6-SPD M/TRANS (MM6) ..	12523059	1	20.45	BEARING, CTSHF EXTN	2-L4,1
01-02	YY37 MANUAL 6 SPD O/D TRANS, TREMEC (M12)	88894092	1	7.75	BEARING, CTSHF EXTN	2-L12,1
97-02	Y 6-SPD M/TRANS (MM6) ..	12455042	1	388.00	EXTENSION, TRANS	2-L4,86
01-02	YY37 MANUAL 6 SPD O/D TRANS, TREMEC (M12)	12455042	1	388.00	EXTENSION, TRANS	2-L4,86
97-02	Y 6-SPD M/TRANS (MM6) ..	12455043	1	3.33	STUD, TRANS EXTN	2-L4,100
01	YY37 MANUAL 6 SPD O/D TRANS, TREMEC (M12)	12455043	1	3.33	STUD, TRANS EXTN	2-L4,100

4.349 FUNNEL, Oil Supply

97-02	Y 6-SPD M/TRANS (MM6) ..	12523275	1	4.55	FUNNEL, TRANS LUB	2-L4,132
01-02	YY37 MANUAL 6 SPD O/D TRANS, TREMEC (M12)	12523275	1	4.55	FUNNEL, TRANS LUB	2-L4,132

4.350 SENSOR, Transmission Oil Cooler

02	YY37 5.7S (LS6), MANUAL 6 SPD O/D TRANS, TREMEC (M12)	12458118	1	52.00	SENSOR, M/TRNS FLUID TEMP (AC-DELCO #12458118)	

*EXPORT**********EXPORT**********EXPORT**********EXPORT**********EXPORT*

98-02	Y 5.7G (LS1), 6-SPD M/TRANS (MM6), EUROPEAN PROVISIONS (VD1) (EXPORT)	12458118	1	52.00	SENSOR, M/TRNS FLUID TEMP (AC-DELCO #12458118)	

4.351 SHAFT, Transmission Main Drive (Clutch)

97-01	Y 6-SPD M/TRANS (MM6) ..	88894115	1	414.00	SHAFT, INPUT (04.403)	2-L4,10
02	Y 6-SPD M/TRANS (MM6) ..	88894115	1	414.00	SHAFT, INPUT (04.403)	2-L4,10

4.354 SEAL, Transmission Clutch Gear Oil

97-02	Y 6-SPD M/TRANS (MM6) ..	15635337	1	6.05	SEAL, INPUT SHF	2-L4,6
01-02	YY37 MANUAL 6 SPD O/D TRANS, TREMEC (M12)	15635337	1	6.05	SEAL, INPUT SHF	2-L4,6

4.355 BEARING, Transmission Gear

97-02	Y 6-SPD M/TRANS (MM6) ..	12523289	1	36.25	BEARING, MAIN DRV GR	2-L4,9
97-02	Y 6-SPD M/TRANS (MM6) ..	12523188	1	9.65	BEARING, 1ST GR (04.383)	2-L4,40
01-02	YY37 MANUAL 6 SPD O/D TRANS, TREMEC (M12)	12523188	1	9.65	BEARING, 1ST GR (04.383)	2-L4,40
97-02	Y 6-SPD M/TRANS (MM6) ..	12523073	1	10.20	BEARING, 2ND GR	2-L4,24
97-02	Y 6-SPD M/TRANS (MM6) ..	12523073	1	10.20	BEARING, 3RD GR	2-L4,24
01-02	YY37 MANUAL 6 SPD O/D TRANS, TREMEC (M12)	12523073	1	10.20	BEARING, 3RD GR	2-L4,24

cardiagn.com

4.355 BEARING, Transmission Gear (Con't)

97-02	Y 6-SPD M/TRANS (MM6) ..	12523247	1	6.65	BEARING, 5TH GR	2-L4,127
01-02	YY37 MANUAL 6 SPD O/D TRANS, TREMEC (M12)	88894093	1	16.45	BEARING, 5TH GR	2-L12,127

4.376 SHIM, Transmission Main Drive Gear (Clutch)

97-02	Y 6-SPD M/TRANS (MM6) ..	12523218	AR	*1.35	SHIM, INPUT SHF BRG (.022MM)	2-L4,7
97-02	Y 6-SPD M/TRANS (MM6) ..	12523220	AR	*.81	SHIM, INPUT SHF BRG (.026MM)	2-L4,7
97-02	Y 6-SPD M/TRANS (MM6) ..	12523221	AR	4.55	SHIM, INPUT SHF BRG (.028MM)	2-L4,7
97-02	Y 6-SPD M/TRANS (MM6) ..	12523222	AR	4.55	SHIM, INPUT SHF BRG (.030MM)	2-L4,7
97-02	Y 6-SPD M/TRANS (MM6) ..	12523223	AR	*.81	SHIM, INPUT SHF BRG (.032MM)	2-L4,7
97-02	Y 6-SPD M/TRANS (MM6) ..	12523224	AR	4.55	SHIM, INPUT SHF BRG (.034MM)	2-L4,7
97-02	Y 6-SPD M/TRANS (MM6) ..	12523225	AR	*.81	SHIM, INPUT SHF BRG (.036MM)	2-L4,7
97-02	Y 6-SPD M/TRANS (MM6) ..	12523226	AR	4.55	SHIM, INPUT SHF BRG (.038MM)	2-L4,7
97-02	Y 6-SPD M/TRANS (MM6) ..	12523227	AR	4.55	SHIM, INPUT SHF BRG (.040MM)	2-L4,7
97-02	Y 6-SPD M/TRANS (MM6) ..	12523228	AR	4.55	SHIM, INPUT SHF BRG (.042MM)	2-L4,7
97-02	Y 6-SPD M/TRANS (MM6) ..	12523229	AR	4.55	SHIM, INPUT SHF BRG (.044MM)	2-L4,7
97-02	Y 6-SPD M/TRANS (MM6) ..	12523230	AR	4.55	SHIM, INPUT SHF BRG (.046MM)	2-L4,7
97-02	Y 6-SPD M/TRANS (MM6) ..	12523231	AR	*.81	SHIM, INPUT SHF BRG (.048MM)	2-L4,7
97-02	Y 6-SPD M/TRANS (MM6) ..	12523232	AR	*.81	SHIM, INPUT SHF BRG (.050MM)	2-L4,7
01-02	YY37 MANUAL 6 SPD O/D TRANS, TREMEC (M12)	12523218	AR	*1.35	SHIM, INPUT SHF BRG (.022MM)	2-L4,7
01-02	YY37 MANUAL 6 SPD O/D TRANS, TREMEC (M12)	12523220	AR	*.81	SHIM, INPUT SHF BRG (.026MM)	2-L4,7
01-02	YY37 MANUAL 6 SPD O/D TRANS, TREMEC (M12)	12523221	AR	4.55	SHIM, INPUT SHF BRG (.028MM)	2-L4,7
01-02	YY37 MANUAL 6 SPD O/D TRANS, TREMEC (M12)	12523222	AR	4.55	SHIM, INPUT SHF BRG (.030MM)	2-L4,7
01-02	YY37 MANUAL 6 SPD O/D TRANS, TREMEC (M12)	12523223	AR	*.81	SHIM, INPUT SHF BRG (.032MM)	2-L4,7
01-02	YY37 MANUAL 6 SPD O/D TRANS, TREMEC (M12)	12523224	AR	4.55	SHIM, INPUT SHF BRG (.034MM)	2-L4,7
01-02	YY37 MANUAL 6 SPD O/D TRANS, TREMEC (M12)	12523225	AR	*.81	SHIM, INPUT SHF BRG (.036MM)	2-L4,7
01-02	YY37 MANUAL 6 SPD O/D TRANS, TREMEC (M12)	12523226	AR	4.55	SHIM, INPUT SHF BRG (.038MM)	2-L4,7
01-02	YY37 MANUAL 6 SPD O/D TRANS, TREMEC (M12)	12523227	AR	4.55	SHIM, INPUT SHF BRG (.040MM)	2-L4,7
01-02	YY37 MANUAL 6 SPD O/D TRANS, TREMEC (M12)	12523228	AR	4.55	SHIM, INPUT SHF BRG (.042MM)	2-L4,7
01-02	YY37 MANUAL 6 SPD O/D TRANS, TREMEC (M12)	12523229	AR	4.55	SHIM, INPUT SHF BRG (.044MM)	2-L4,7
01-02	YY37 MANUAL 6 SPD O/D TRANS, TREMEC (M12)	12523230	AR	4.55	SHIM, INPUT SHF BRG (.046MM)	2-L4,7
01-02	YY37 MANUAL 6 SPD O/D TRANS, TREMEC (M12)	12523231	AR	*.81	SHIM, INPUT SHF BRG (.048MM)	2-L4,7
01-02	YY37 MANUAL 6 SPD O/D TRANS, TREMEC (M12)	12523232	AR	*.81	SHIM, INPUT SHF BRG (.050MM)	2-L4,7
01-02	YY37 MANUAL 6 SPD O/D TRANS, TREMEC (M12)	14069884	AR	4.53	SHIM, INPUT SHF BRG (.041 THK) (AC-DELCO #14069884)	2-L12,7
01-02	YY37 MANUAL 6 SPD O/D TRANS, TREMEC (M12)	14069885	AR	4.53	SHIM, INPUT SHF BRG (.042 THK) (AC-DELCO #14069885)	2-L12,7
01-02	YY37 MANUAL 6 SPD O/D TRANS, TREMEC (M12)	14069886	AR	4.53	SHIM, INPUT SHF BRG (.043 THK) (MAIN DR) (AC-DELCO #14069886)	2-L12,7
01-02	YY37 MANUAL 6 SPD O/D TRANS, TREMEC (M12)	14069887	AR	4.53	SHIM, INPUT SHF BRG (.044 THK) (MAIN DR) (AC-DELCO #14069887)	2-L12,7

cardiagn.com

4.380 SYNCHRONIZER, Transmission Synchronizer

97–02	Y 6–SPD M/TRANS (MM6) ..	12523043	1	201.00	SYNCHRONIZER, REV GR	2–L4,62
01–02	YY37 MANUAL 6 SPD O/D TRANS, TREMEC (M12)	12523043	1	201.00	SYNCHRONIZER, REV GR	2–L4,62
97–02	Y 6–SPD M/TRANS (MM6) ..	12455006	1	271.00	SYNCHRONIZER, 1ST & 2ND GR	2–L4,30
01–02	YY37 MANUAL 6 SPD O/D TRANS, TREMEC (M12)	12455006	1	271.00	SYNCHRONIZER, 1ST & 2ND GR	2–L4,30
97–02	Y 6–SPD M/TRANS (MM6) ..	12455002	1	224.00	SYNCHRONIZER, 3RD & 4TH GR	2–L4,14
01–02	YY37 MANUAL 6 SPD O/D TRANS, TREMEC (M12)	12455002	1	224.00	SYNCHRONIZER, 3RD & 4TH GR	2–L4,14
97–02	Y 6–SPD M/TRANS (MM6) ..	12455035	1	224.00	SYNCHRONIZER, 5TH & 6TH GR	2–L4,117
01–02	YY37 MANUAL 6 SPD O/D TRANS, TREMEC (M12)	12455035	1	224.00	SYNCHRONIZER, 5TH & 6TH GR	2–L4,117

4.383 CONE – RING, Transmission Synchronizer

01–02	YY37 MANUAL 6 SPD O/D TRANS, TREMEC (M12)	88894070	1	52.00	CONE, TRANS SYN (4TH, 5TH & 6TH)	2–L12,186
97–02	Y 6–SPD M/TRANS (MM6) ..	12455010	1	109.00	CONE, 1ST GR SYN INR (W/18 INNER GROOVES)	2–L4,37
01–02	YY37 MANUAL 6 SPD O/D TRANS, TREMEC (M12)	12455010	1	109.00	CONE, 1ST GR SYN INR (W/18 INNER GROOVES)	2–L4,37
97–02	Y 6–SPD M/TRANS (MM6) ..	12455011	1	49.25	CONE, 1ST GR SYN OTR (W/12 INNER GROOVES)	2–L4,36
01–02	YY37 MANUAL 6 SPD O/D TRANS, TREMEC (M12)	12455011	1	49.25	CONE, 1ST GR SYN OTR (W/12 INNER GROOVES)	2–L4,36
97–02	Y 6–SPD M/TRANS (MM6) ..	12455010	1	109.00	CONE, 2ND GR SYN INR (W/18 INNER GROOVES)	2–L4,37
01–02	YY37 MANUAL 6 SPD O/D TRANS, TREMEC (M12)	12455010	1	109.00	CONE, 2ND GR SYN INR (W/18 INNER GROOVES)	2–L4,37
97–02	Y 6–SPD M/TRANS (MM6) ..	12455011	1	49.25	CONE, 2ND GR SYN OTR (W/12 INNER GROOVES)	2–L4,36
01–02	YY37 MANUAL 6 SPD O/D TRANS, TREMEC (M12)	12455011	1	49.25	CONE, 2ND GR SYN OTR (W/12 INNER GROOVES)	2–L4,36
01–02	YY37 MANUAL 6 SPD O/D TRANS, TREMEC (M12) ...	88894069	1	82.75	CONE, 3RD GR SYN (OUTER) ...	2–L12,193
97–02	Y 6–SPD M/TRANS (MM6) ..	12454999	1	32.75	CONE, 3RD GR SYN INR	2–L4,192
01–02	YY37 MANUAL 6 SPD O/D TRANS, TREMEC (M12)	12454999	1	32.75	CONE, 3RD GR SYN INR	2–L4,192
97–02	Y 6–SPD M/TRANS (MM6) ..	12455001	1	73.75	CONE, 3RD GR SYN OTR	2–L4,193
97–02	Y 6–SPD M/TRANS (MM6) ..	12455017	1	29.25	CONE, 4TH GR SYN INR	2–L4,195
01–02	YY37 MANUAL 6 SPD O/D TRANS, TREMEC (M12)	12455017	1	29.25	CONE, 4TH GR SYN INR	2–L4,195
97–02	Y 6–SPD M/TRANS (MM6) ..	12455016	1	48.50	CONE, 4TH GR SYN OTR	2–L4,186
97–02	Y 6–SPD M/TRANS (MM6) ..	12455017	1	29.25	CONE, 5TH & 6TH GR SYN INR .	2–L4,195
97–02	Y 6–SPD M/TRANS (MM6) ..	12455016	1	48.50	CONE, 5TH & 6TH GR SYN OTR .	2–L4,186
97–02	Y 6–SPD M/TRANS (MM6) ..	12523049	1	21.40	RING, REV GR BLOCKING (04.384)	2–L4,70
01–02	YY37 MANUAL 6 SPD O/D TRANS, TREMEC (M12)	12523049	1	21.40	RING, REV GR BLOCKING (04.384)	2–L4,70
97–02	Y 6–SPD M/TRANS (MM6) ..	12455009	1	65.75	RING, 1ST GR BLOCKING	2–L4,29
01–02	YY37 MANUAL 6 SPD O/D TRANS, TREMEC (M12)	12455009	1	65.75	RING, 1ST GR BLOCKING	2–L4,29
97–02	Y 6–SPD M/TRANS (MM6) ..	12455009	1	65.75	RING, 2ND GR BLOCKING	2–L4,29
97–02	Y 6–SPD M/TRANS (MM6) ..	12455000	1	24.75	RING, 3RD GR BLOCKING (04.416)	2–L4,19
01–02	YY37 MANUAL 6 SPD O/D TRANS, TREMEC (M12) ...	12455000	1	24.75	RING, 3RD GR BLOCKING (04.416)	2–L4,19
97–02	Y 6–SPD M/TRANS (MM6) ..	12455018	1	27.75	RING, 4TH GR BLOCKING	2–L4,12
01–02	YY37 MANUAL 6 SPD O/D TRANS, TREMEC (M12)	12455018	1	27.75	RING, 4TH GR BLOCKING	2–L4,12
97–02	Y 6–SPD M/TRANS (MM6) ..	12455036	1	32.75	RING, 5TH GR BLOCKING	2–L4,125

cardiagn.com

4.383 CONE – RING, Transmission Synchronizer (Con't)

01–02	YY37 MANUAL 6 SPD O/D TRANS, TREMEC (M12)	12455036	1	32.75	RING, 5TH GR BLOCKING	2–L4,125
97–02	Y 6–SPD M/TRANS (MM6) ..	12455036	1	32.75	RING, 6TH GR BLOCKING	2–L4,125
01	YY37 MANUAL 6 SPD O/D TRANS, TREMEC (M12)	12455036	1	32.75	RING, 6TH GR BLOCKING	2–L4,125

4.384 INSERT – KEY – RETAINER – RING – SPRING – WASHER, Transmission Synchronizer

97–02	Y 6–SPD M/TRANS (MM6) ..	12455007	1	4.55	INSERT, 1ST & 2ND GR SYN	2–L4,32
01–02	YY37 MANUAL 6 SPD O/D TRANS, TREMEC (M12)	12455007	1	4.55	INSERT, 1ST & 2ND GR SYN	2–L4,32
97–02	Y 6–SPD M/TRANS (MM6) ..	14083521	3	4.55	KEY, 5TH & 6TH & REV SYN (WINGED FLANGES ON SIDES OF KEY)	2–L4,119
01–02	YY37 MANUAL 6 SPD O/D TRANS, TREMEC (M12)	14083521	3	4.55	KEY, 5TH & 6TH & REV SYN (WINGED FLANGES ON SIDES OF KEY)	2–L4,119
97–02	Y 6–SPD M/TRANS (MM6) ..	12523044	1	4.55	RETAINER, REV GR SYN INSERT	2–L4,67
01–02	YY37 MANUAL 6 SPD O/D TRANS, TREMEC (M12)	12523044	1	4.55	RETAINER, REV GR SYN INSERT	2–L4,67
97–02	Y 6–SPD M/TRANS (MM6) ..	12523187	2	4.28	RING, TRANS SYN RET (1ST & 2ND GEAR) (04.318)	2–L4,38
01–02	YY37 MANUAL 6 SPD O/D TRANS, TREMEC (M12)	12523187	2	4.28	RING, TRANS SYN RET (1ST & 2ND GEAR) (04.318)	2–L4,38
97–02	Y 6–SPD M/TRANS (MM6) ..	12523253	1	4.28	RING, 2ND & 3RD GR SYN HUB RET (04.318)	2–L4,116
01–02	YY37 MANUAL 6 SPD O/D TRANS, TREMEC (M12)	12523253	1	4.28	RING, 2ND & 3RD GR SYN HUB RET (04.318)	2–L4,116
97–02	Y 6–SPD M/TRANS (MM6) ..	12541299	1	4.55	RING, 5TH GR SYN RET (.89 ID) .	2–L4,124
01–02	YY37 MANUAL 6 SPD O/D TRANS, TREMEC (M12)	12541299	1	4.55	RING, 5TH GR SYN RET (.89 ID) .	2–L4,124
97–02	Y 6–SPD M/TRANS (MM6) ..	12455008	2	8.84	SPRING, SYN	2–L4,31
97–02	Y 6–SPD M/TRANS (MM6) ..	12523185	2	3.33	SPRING, SYN (2–3 REV)	2–L4,15
97–02	Y 6–SPD M/TRANS (MM6) ..	12523185	2	3.33	SPRING, SYN (3RD & 4TH)	2–L4,15
97–02	Y 6–SPD M/TRANS (MM6) ..	12523251	2	3.33	SPRING, SYN (5–6 REV)	2–L4,118
01–02	YY37 MANUAL 6 SPD O/D TRANS, TREMEC (M12)	12455008	2	8.84	SPRING, SYN	2–L4,31
01–02	YY37 MANUAL 6 SPD O/D TRANS, TREMEC (M12)	12523185	2	3.33	SPRING, SYN (2–3 REV)	2–L4,15
01–02	YY37 MANUAL 6 SPD O/D TRANS, TREMEC (M12)	12523185	2	3.33	SPRING, SYN (3RD & 4TH)	2–L4,15
01–02	YY37 MANUAL 6 SPD O/D TRANS, TREMEC (M12)	12523251	2	3.33	SPRING, SYN (5–6 REV)	2–L4,118
97–02	Y 6–SPD M/TRANS (MM6) ..	12455003	2	15.40	WASHER, 3RD & 4TH GR SYN HUB THR	2–L4,13
01–02	YY37 MANUAL 6 SPD O/D TRANS, TREMEC (M12)	12455003	1	15.40	WASHER, 3RD & 4TH GR SYN HUB THR	2–L4,13
97–02	Y 6–SPD M/TRANS (MM6) ..	12455039	2	16.79	WASHER, 5TH & 6TH GR SYN ..	2–L4,188
01–02	YY37 MANUAL 6 SPD O/D TRANS, TREMEC (M12)	12455039	2	16.79	WASHER, 5TH & 6TH GR SYN ..	2–L4,188

4.395 GEAR, Transmission Second Speed

97–02	Y 6–SPD M/TRANS (MM6) ..	12455004	1	254.00	GEAR, 2ND	2–L4,25
01–02	YY37 MANUAL 6 SPD O/D TRANS, TREMEC (M12)	88894088	1	271.00	GEAR, 2ND	2–L12,25

cardiagn.com

4.399 SEAL, Transmission Mainshaft

97-02	Y 6-SPD M/TRANS (MM6) ..	12455044	1	21.30	SEAL, MAIN SHF INR	2-L4,99
01	YY37 MANUAL 6 SPD O/D TRANS, TREMEC (M12)	12455044	1	21.30	SEAL, MAIN SHF INR	2-L4,99
97-02	Y 6-SPD M/TRANS (MM6) ..	12455045	1	8.85	SEAL, MAIN SHF OTR	2-L4,99
01	YY37 MANUAL 6 SPD O/D TRANS, TREMEC (M12)	12455045	1	8.85	SEAL, MAIN SHF OTR	2-L4,99
97-02	Y 6-SPD M/TRANS (MM6) ..	12369456	1	7.95	SEAL, MAIN SHF SEAL RET (O RING) (05.508)	3-J4,6

4.403 SHAFT, Transmission Mainshaft

97-02	Y 6-SPD M/TRANS (MM6) ..	12454996	1	317.00	SHAFT, MAIN (OUTPUT)	2-L4,23
01-02	YY37 MANUAL 6 SPD O/D TRANS, TREMEC (M12)	12454996	1	317.00	SHAFT, MAIN (OUTPUT)	2-L4,23
01-02	YY37 MANUAL 6 SPD O/D TRANS, TREMEC (M12)	88894050	1	406.00	SHAFT, MAIN (INPUT)	2-L12,10

4.408 BEARING, Transmission Mainshaft Center/Rear

97-02	Y 6-SPD M/TRANS (MM6) ..	12523057	1	29.75	BEARING, MAIN SHF RR (W/STRAIGHT ROLLERS)	2-L4,77
97-02	Y 6-SPD M/TRANS (MM6) ..	12523286	1	42.00	BEARING, MAIN SHF RR (W/TAPPERED ROLLERS)	2-L4,42
01-02	YY37 MANUAL 6 SPD O/D TRANS, TREMEC (M12)	12523057	1	29.75	BEARING, MAIN SHF RR (W/STRAIGHT ROLLERS)	2-L4,77
01-02	YY37 MANUAL 6 SPD O/D TRANS, TREMEC (M12)	12523286	1	42.00	BEARING, MAIN SHF RR (W/TAPPERED ROLLERS)	2-L4,42

4.412 RING - SEAL - SPACER, Transmission Mainshaft

97-02	Y 6-SPD M/TRANS (MM6) ..	12523058	1	4.55	RING, MAIN SHF RR BRG RET ..	2-L4,84
01-02	YY37 MANUAL 6 SPD O/D TRANS, TREMEC (M12)	12523058	1	4.55	RING, MAIN SHF RR BRG RET ..	2-L4,84
97-02	Y 6-SPD M/TRANS (MM6) ..	24207010	1	8.50	SEAL, RR OUTPUT SHF (04.176) (AC-DELCO #24207010)	3-J7,9
97-02	Y 6 -SPD M/TRANS (MM6) ..	12455005	1	4.55	SPACER, 2ND GR BRG	2-L4,26
01-02	YY37 MANUAL 6 SPD O/D TRANS, TREMEC (M12)	12455005	1	4.55	SPACER, 2ND GR BRG	2-L4,26

4.415 GEAR - WASHER, Transmission Third, Fourth & Fifth Gear

97-01	Y 6-SPD M/TRANS (MM6) ..	12454998	1	217.00	GEAR, 3RD	2-L4,20
01-02	YY37 MANUAL 6 SPD O/D TRANS, TREMEC (M12)	88894087	1	248.00	GEAR, 3RD	2-L12,20
02	Y 6-SPD M/TRANS (MM6) ..	88894114	1		GEAR, 3RD	2-L4,20
97-02	Y 6-SPD M/TRANS (MM6) ..	12455034	1	224.00	GEAR, 5TH (DRV)	2-L4,126
97-02	Y 6-SPD M/TRANS (MM6) ..	12523042	1	318.00	GEAR, 5TH (& 6TH DRVN)	2-L4,61
01-02	YY37 MANUAL 6 SPD O/D TRANS, TREMEC (M12)	12455034	1	224.00	GEAR, 5TH (DRV)	2-L4,126
01-02	YY37 MANUAL 6 SPD O/D TRANS, TREMEC (M12)	12523042	1	318.00	GEAR, 5TH (& 6TH DRVN)	2-L4,61
97-02	Y 6-SPD M/TRANS (MM6) ..	12455041	1	224.00	GEAR, 6TH	2-L4,109
01-02	YY37 MANUAL 6 SPD O/D TRANS, TREMEC (M12)	12455041	1	224.00	GEAR, 6TH	2-L4,109
97-02	Y 6-SPD M/TRANS (MM6) ..	12454997	1	17.40	WASHER, 3RD GR THR	2-L4,191
01-02	YY37 MANUAL 6 SPD O/D TRANS, TREMEC (M12)	12454997	1	17.40	WASHER, 3RD GR THR	2-L4,191

cardiagn.com

4.416 BEARING – KEY – SPACER, Transmission Mainshaft Gear

01–02	YY37 MANUAL 6 SPD O/D TRANS, TREMEC (M12)	12455000	1	24.75	BEARING, REV GR THR	
97–02	Y 6–SPD M/TRANS (MM6) ..	14083521	3	4.55	KEY, 3RD & 4TH GR (WINGED FLANGES ON SIDES OF KEY) (04.384)	2–L4,16
01–02	YY MANUAL 6 SPD O/D TRANS, TREMEC (M12)	14083521	3	4.55	KEY, 3RD & 4TH GR (WINGED FLANGES ON SIDES OF KEY) (04.384)	2–L4,16
01–02	YY37 MANUAL 6 SPD O/D TRANS, TREMEC (M12)	12523056	2	7.15	SPACER, MAIN SHF GR BRG (6TH SPD)	2–L12,108

4.417 GEAR, Transmission First/revrese Gear

97–02	Y 6–SPD M/TRANS (MM6) ..	12523052	1	193.00	GEAR, REV (TRANS MAIN SHF) .	2–L4,73
01–02	YY37 MANUAL 6 SPD O/D TRANS, TREMEC (M12)	12523052	1	193.00	GEAR, REV (TRANS MAIN SHF) .	2–L4,73
97–02	Y 6–SPD M/TRANS (MM6) ..	12455013	1	281.00	GEAR, 1ST (AC–DELCO #12455013)	2–L4,41
01–02	YY37 MANUAL 6 SPD O/D TRANS, TREMEC (M12)	88894089	1	224.00	GEAR, 1ST	2–L12,41

4.419 SPACER – WASHER, Transmission First/Reverse Gear

97–02	Y 6–SPD M/TRANS (MM6) ..	12455012	1	7.65	SPACER, 1ST GR BRG RLR	2–L4,39
01–02	YY37 MANUAL 6 SPD O/D TRANS, TREMEC (M12)	12455012	1	7.65	SPACER, 1ST GR BRG RLR	2–L4,39
97–02	Y 6–SPD M/TRANS (MM6) ..	12523048	1	3.33	WASHER, REV GR (LOCATED BETWEEN REV GR & SYNCHRO ASM)	2–L4,71
97–02	Y 6–SPD M/TRANS (MM6) ..	12523053	1	6.10	WASHER, REV GR (LOCATED BETWEEN REV GR & REAR MAINSHAFT)	2–L4,74
01–02	YY37 MANUAL 6 SPD O/D TRANS, TREMEC (M12)	12523048	1	3.33	WASHER, REV GR (LOCATED BETWEEN REV GR & SYNCHRO ASM)	2–L4,71
01–02	YY37 MANUAL 6 SPD O/D TRANS, TREMEC (M12)	12523053	1	6.10	WASHER, REV GR (LOCATED BETWEEN REV GR & REAR MAINSHAFT)	2–L4,74
97–02	Y 6–SPD M/TRANS (MM6) ..	12523047	1	*4.55	WASHER, REV GR THR (PEEK) .	2–L4,68
01–02	YY37 MANUAL 6 SPD O/D TRANS, TREMEC (M12)	12523047	1	*4.55	WASHER, REV GR THR (PEEK) .	2–L4,68

4.421 GEAR KIT, Transmission Countershaft

97–02	Y 6–SPD M/TRANS (MM6) ..	12455055	1	1120.00	GEAR KIT, CNTR	2–L4,105
01–02	YY37 MANUAL 6 SPD O/D TRANS, TREMEC (M12)	12455055	1	1120.00	GEAR KIT, CNTR	2–L4,105

4.422 BEARING – SHIM, Transmission Countershaft Gear

97–02	Y 6–SPD M/TRANS (MM6) ..	12523255	1	6.20	BEARING, CNTR GR (04.355) ..	2–L4,110
01–02	YY37 MANUAL 6 SPD O/D TRANS, TREMEC (M12)	12523255	1	6.20	BEARING, CNTR GR (04.355) ...	2–L4,110
97–02	Y 6–SPD M/TRANS (MM6) ..	12523054	1	39.50	BEARING, CNTR GR FRT	2–L4,104
01–02	YY37 MANUAL 6 SPD O/D TRANS, TREMEC (M12) ...	88894090	1		BEARING, CNTR GR FRT	2–L12,104
97–02	Y 6–SPD M/TRANS (MM6) ..	12523216	1	84.15	BEARING, CNTR GR RR	2–L4,106
01–02	YY37 MANUAL 6 SPD O/D TRANS, TREMEC (M12) .	88894091	1		BEARING, CNTR GR RR	2–L12,106
97–02	Y 6–SPD M/TRANS (MM6) ..	14050780	AR	4.55	SHIM, CNTR GR BRG (.014 THK) (04.376)	2–L4,102

cardiagn.com

97–02	Y 6–SPD M/TRANS (MM6) ..	14050781	AR	*3.35	SHIM, CNTR GR BRG (.016 THK) (04.376)	2–L4,102
97–02	Y 6–SPD M/TRANS (MM6) ..	14050782	AR	*3.35	SHIM, CNTR GR BRG (.018 THK) (04.376)	2–L4,102
97–02	Y 6–SPD M/TRANS (MM6) ..	14050783	AR	*3.35	SHIM, CNTR GR BRG (.012 THK) (04.376)	2–L4,102
97–02	Y 6–SPD M/TRANS (MM6) ..	14050784	AR	4.55	SHIM, CNTR GR BRG (.020 THK) (04.376)	2–L4,102
97–02	Y 6–SPD M/TRANS (MM6) ..	14050785	AR	4.55	SHIM, CNTR GR BRG (.036 THK) (04.376)	2–L4,102
97–02	Y 6–SPD M/TRANS (MM6) ..	14069868	AR	4.53	SHIM, CNTR GR BRG (.024 THK) (04.376) (AC–DELCO #14069868)	2–L4,102
97–02	Y 6–SPD M/TRANS (MM6) ..	14069869	AR	4.53	SHIM, CNTR GR BRG (.025 THK) (04.376) (AC–DELCO #14069869)	2–L4,102
97–02	Y 6–SPD M/TRANS (MM6) ..	14069870	AR	4.53	SHIM, CNTR GR BRG (.026 THK) (04.376) (AC–DELCO #14069870)	2–L4,102
97–02	Y 6–SPD M/TRANS (MM6) ..	14069871	AR	4.53	SHIM, CNTR GR BRG (.027 THK) (04.376) (AC–DELCO #14069871)	2–L4,102
97–02	Y 6–SPD M/TRANS (MM6) ..	14069872	AR	4.53	SHIM, CNTR GR BRG (.028 THK) (04.376) (AC–DELCO #14069872)	2–L4,102
97–02	Y 6–SPD M/TRANS (MM6) ..	14069873	AR	4.53	SHIM, CNTR GR BRG (.029 THK) (04.376) (AC–DELCO #14069873)	2–L4,102
97–02	Y 6–SPD M/TRANS (MM6) ..	14069874	AR	4.53	SHIM, CNTR GR BRG (.030 THK) (04.376) (AC–DELCO #14069874)	2–L4,102
97–02	Y 6–SPD M/TRANS (MM6) ..	14069875	AR	4.53	SHIM, CNTR GR BRG (.031 THK) (04.376) (AC–DELCO #14069875)	2–L4,102
97–02	Y 6–SPD M/TRANS (MM6) ..	14069876	AR	4.53	SHIM, CNTR GR BRG (.032 THK) (04.376) (AC–DELCO #14069876)	2–L4,102
97–02	Y 6–SPD M/TRANS (MM6) .	14069877	AR	4.53	SHIM, CNTR GR BRG (.033 THK) (04.376) (AC–DELCO #14069877)	2–L4,102
97–02	Y 6–SPD M/TRANS (MM6) ..	14069878	AR	4.53	SHIM, CNTR GR BRG (.034 THK) (04.376) (AC–DELCO #14069878)	2–L4,102
97–02	Y 6–SPD M/TRANS (MM6) ..	14069879	AR	4.53	SHIM, CNTR GR BRG (.035 THK) (04.376) (AC–DELCO #14069879)	2–L4,102
97–02	Y 6–SPD M/TRANS (MM6) ..	14069880	AR	4.53	SHIM, CNTR GR BRG (.037 THK) (04.376) (AC–DELCO #14069880)	2–L4,102
97–02	Y 6–SPD M/TRANS (MM6) ..	14069881	AR	4.53	SHIM, CNTR GR BRG (.038 THK) (04.376) (AC–DELCO #14069881)	2–L4,102
97–02	Y 6–SPD M/TRANS (MM6) ..	14069882	AR	4.53	SHIM, CNTR GR BRG (.039 THK) (04.376) (AC–DELCO #14069882)	2–L4,102
97–02	Y 6–SPD M/TRANS (MM6) ..	14069883	AR	4.53	SHIM, CNTR GR BRG (.040 THK) (04.376) (AC–DELCO #14069883)	2–L4,102
01–02	YY37 MANUAL 6 SPD O/D TRANS, TREMEC (M12)	14050780	AR	4.55	SHIM, CNTR GR BRG (.014 THK) (04.376)	2–L4,102

cardiagn.com

01–02	YY37 MANUAL 6 SPD O/D TRANS, TREMEC (M12)	14050781	AR	*3.35	SHIM, CNTR GR BRG (.016 THK) (04.376)	2–L4,102
01–02	YY37 MANUAL 6 SPD O/D TRANS, TREMEC (M12)	14050782	AR	*3.35	SHIM, CNTR GR BRG (.018 THK) (04.376)	2–L4,102
01–02	YY37 MANUAL 6 SPD O/D TRANS, TREMEC (M12)	14050783	AR	*3.35	SHIM, CNTR GR BRG (.012 THK) (04.376)	2–L4,102
01–02	YY37 MANUAL 6 SPD O/D TRANS, TREMEC (M12)	14050784	AR	4.55	SHIM, CNTR GR BRG (.020 THK) (04.376)	2–L4,102
01–02	YY37 MANUAL 6 SPD O/D TRANS, TREMEC (M12)	14050785	AR	4.55	SHIM, CNTR GR BRG (.036 THK) (04.376)	2–L4,102
01–02	YY37 MANUAL 6 SPD O/D TRANS, TREMEC (M12)	14069868	AR	4.53	SHIM, CNTR GR BRG (.024 THK) (04.376) (AC–DELCO #14069868)	2–L4,102
01–02	YY37 MANUAL 6 SPD O/D TRANS, TREMEC (M12)	14069869	AR	4.53	SHIM, CNTR GR BRG (.025 THK) (04.376) (AC–DELCO #14069869)	2–L4,102
01–02	YY37 MANUAL 6 SPD O/D TRANS, TREMEC (M12)	14069870	AR	4.53	SHIM, CNTR GR BRG (.026 THK) (04.376) (AC–DELCO #14069870)	2–L4,102
01–02	YY37 MANUAL 6 SPD O/D TRANS, TREMEC (M12)	14069871	AR	4.53	SHIM, CNTR GR BRG (.027 THK) (04.376) (AC–DELCO #14069871)	2–L4,102
01–02	YY37 MANUAL 6 SPD O/D TRANS, TREMEC (M12)	14069872	AR	4.53	SHIM, CNTR GR BRG (.028 THK) (04.376) (AC–DELCO #14069872)	2–L4,102
01–02	YY37 MANUAL 6 SPD O/D TRANS, TREMEC (M12)	14069873	AR	4.53	SHIM, CNTR GR BRG (.029 THK) (04.376) (AC–DELCO #14069873)	2–L4,102
01–02	YY37 MANUAL 6 SPD O/D TRANS, TREMEC (M12)	14069874	AR	4.53	SHIM, CNTR GR BRG (.030 THK) (04.376) (AC–DELCO #14069874)	2–L4,102
01–02	YY37 MANUAL 6 SPD O/D TRANS, TREMEC (M12)	14069875	AR	4.53	SHIM, CNTR GR BRG (.031 THK) (04.376) (AC–DELCO #14069875)	2–L4,102
01–02	YY37 MANUAL 6 SPD O/D TRANS, TREMEC (M12)	14069876	AR	4.53	SHIM, CNTR GR BRG (.032 THK) (04.376) (AC–DELCO #14069876)	2–L4,102
01–02	YY37 MANUAL 6 SPD O/D TRANS, TREMEC (M12)	14069877	AR	4.53	SHIM, CNTR GR BRG (.033 THK) (04.376) (AC–DELCO #14069877)	2–L4,102
01–02	YY37 MANUAL 6 SPD O/D TRANS, TREMEC (M12)	14069878	AR	4.53	SHIM, CNTR GR BRG (.034 THK) (04.376) (AC–DELCO #14069878)	2–L4,102
01–02	YY37 MANUAL 6 SPD O/D TRANS, TREMEC (M12)	14069879	AR	4.53	SHIM, CNTR GR BRG (.035 THK) (04.376) (AC–DELCO #14069879)	2–L4,102
01–02	YY37 MANUAL 6 SPD O/D TRANS, TREMEC (M12)	14069880	AR	4.53	SHIM, CNTR GR BRG (.037 THK) (04.376) (AC–DELCO #14069880)	2–L4,102
01–02	YY37 MANUAL 6 SPD O/D TRANS, TREMEC (M12)	14069881	AR	4.53	SHIM, CNTR GR BRG (.038 THK) (04.376) (AC–DELCO #14069881)	2–L4,102
01–02	YY37 MANUAL 6 SPD O/D TRANS, TREMEC (M12) ...	14069882	AR	4.53	SHIM, CNTR GR BRG (.039 THK) (04.376) (AC–DELCO #14069882)	2–L4,102
01–02	YY37 MANUAL 6 SPD O/D TRANS, TREMEC (M12)	14069883	AR	4.53	SHIM, CNTR GR BRG (.040 THK) (04.376) (AC–DELCO #14069883)	2–L4,102
97–02	Y6–SPD M/TRANS (MM6) ..	12623259	AR	4.55	SHIM, FRT CTSHF EXTN BRG (.022MM)	2–L4,131

cardiagn.com

97–02	Y 6–SPD M/TRANS (MM6) ..	12523260	AR	4.55	SHIM, FRT CTSHF EXTN BRG (.024MM)	2–L4,131
97–02	Y 6–SPD M/TRANS (MM6) ..	12523261	AR	4.55	SHIM, FRT CTSHF EXTN BRG (.026MM)	2–L4,131
97–02	Y 6–SPD M/TRANS (MM6) ..	12523262	AR	4.55	SHIM, FRT CTSHF EXTN BRG (.028MM)	2–L4,131
97–02	Y 6–SPD M/TRANS (MM6) ..	12523263	AR	4.55	SHIM, FRT CTSHF EXTN BRG (.030MM)	2–L4,131
97–02	Y 6–SPD M/TRANS (MM6) ..	12523264	AR	4.55	SHIM, FRT CTSHF EXTN BRG (.032MM)	2–L4,131
97–02	Y 6–SPD M/TRANS (MM6) ..	12523265	AR	4.55	SHIM, FRT CTSHF EXTN BRG (.034 THK)	2–L4,131
97–02	Y 6–SPD M/TRANS (MM6) ..	12523266	AR	4.55	SHIM, FRT CTSHF EXTN BRG (.036MM)	2–L4,131
97–02	Y 6–SPD M/TRANS (MM6) ..	12523267	AR	4.55	SHIM, FRT CTSHF EXTN BRG (.038MM)	2–L4,131
97–02	Y 6–SPD M/TRANS (MM6) ..	12523268	AR	4.55	SHIM, FRT CTSHF EXTN BRG (.040MM)	2–L4,131
97–02	Y 6–SPD M/TRANS (MM6) ..	12523269	AR	4.55	SHIM, FRT CTSHF EXTN BRG (.042MM)	2–L4,131
97–02	Y 6–SPD M/TRANS (MM6) ..	12523270	AR	4.55	SHIM, FRT CTSHF EXTN BRG (.044MM)	2–L4,131
97–02	Y 6–SPD M/TRANS (MM6) ..	12523271	AR	4.55	SHIM, FRT CTSHF EXTN BRG (.046MM)	2–L4,131
97–02	Y 6–SPD M/TRANS (MM6) ..	12523272	AR	4.55	SHIM, FRT CTSHF EXTN BRG (.048MM)	2–L4,131
97–02	Y 6–SPD M/TRANS (MM6) ..	12523273	AR	4.55	SHIM, FRT CTSHF EXTN BRG (.050MM)	2–L4,131
01–02	YY37 MANUAL 6 SPD O/D TRANS, TREMEC (M12)	12523259	AR	4.55	SHIM, FRT CTSHF EXTN BRG (.022MM)	2–L4,131
01–02	YY37 MANUAL 6 SPD O/D TRANS, TREMEC (M12) ...	12523260	AR	4.55	SHIM, FRT CTSHF EXTN BRG (.024MM)	2–L4,131
01–02	YY37 MANUAL 6 SPD O/D TRANS, TREMEC (M12)	12523261	AR	4.55	SHIM, FRT CTSHF EXTN BRG (.026MM)	2–L4,131
01–02	YY37 MANUAL 6 SPD O/D TRANS, TREMEC (M12)	12523262	AR	4.55	SHIM, FRT CTSHF EXTN BRG (.028MM)	2–L4,131
01–02	YY37 MANUAL 6 SPD O/D TRANS, TREMEC (M12)	12523263	AR	4.55	SHIM, FRT CTSHF EXTN BRG (.030MM)	2–L4,131
01–02	YY37 MANUAL 6 SPD O/D TRANS, TREMEC (M12)	12523264	AR	4.55	SHIM, FRT CTSHF EXTN BRG (.032MM)	2–L4,131
01–02	YY37 MANUAL 6 SPD O/D TRANS, TREMEC (M12)	12523265	AR	4.55	SHIM, FRT CTSHF EXTN BRG (.034 THK)	2–L4,131
01–02	YY37 MANUAL 6 SPD O/D TRANS, TREMEC (M12)	12523266	AR	4.55	SHIM, FRT CTSHF EXTN BRG (.036MM)	2–L4,131
01–02	YY37 MANUAL 6 SPD O/D TRANS, TREMEC (M12)	12523267	AR	4.55	SHIM, FRT CTSHF EXTN BRG (.038MM)	2–L4,131
01–02	YY37 MANUAL 6 SPD O/D TRANS, TREMEC (M12)	12523268	AR	4.55	SHIM, FRT CTSHF EXTN BRG (.040MM)	2–L4,131
01–02	YY37 MANUAL 6 SPD O/D TRANS, TREMEC (M12)	12523269	AR	4.55	SHIM, FRT CTSHF EXTN BRG (.042MM)	2–L4,131
01–02	YY37 MANUAL 6 SPD O/D TRANS, TREMEC (M12) ...	12523270	AR	4.55	SHIM, FRT CTSHF EXTN BRG (.044MM)	2–L4,131
01–02	YY37 MANUAL 6 SPD O/D TRANS, TREMEC (M12)	12523271	AR	4.55	SHIM, FRT CTSHF EXTN BRG (.046MM)	2–L4,131
01–02	YY37 MANUAL 6 SPD O/D TRANS, TREMEC (M12)	12523272	AR	4.55	SHIM, FRT CTSHF EXTN BRG (.048MM)	2–L4,131
01–02	YY37 MANUAL 6 SPD O/D TRANS, TREMEC (M12) ...	12523273	AR	4.55	SHIM, FRT CTSHF EXTN BRG (.050MM)	2–L4,131

cardiagn.com

4.426 SPACER, Transmission Countershaft Gear

97–02	Y 6–SPD M/TRANS (MM6) ..	12455040	2	3.33	SPACER, 5TH & 6TH CNTR GR (04.416)	2–L4,115
01–02	YY37 MANUAL 6 SPD O/D TRANS, TREMEC (M12)	12455040	2	3.33	SPACER, 5TH & 6TH CNTR GR (04.416)	2–L4,115

4.430 GEAR, Transmission Reverse Idler

97–02	Y 6–SPD M/TRANS (MM6) ..	12523283	3	201.00	GEAR, REV IDLER	2–L4,136
01–02	YY37 MANUAL 6 SPD O/D TRANS, TREMEC (M12)	12523283	1	201.00	GEAR, REV IDLER	2–L4,136

4.431 BEARING, Transmission Reverse Idler Gear/Shaft

97–02	Y 6–SPD M/TRANS (MM6) ..	12523050	1	8.60	BEARING, REV GR	2–L4,72
01–02	YY37 MANUAL 6 SPD O/D TRANS, TREMEC (M12)	12523050	1	8.60	BEARING, REV GR	2–L4,72
97–02	Y 6–SPD M/TRANS (MM6) ..	12523284	1	9.75	BEARING, REV IDLER GR (04.355) (AC–DELCO #12523284)	2–L4,137
01–02	YY37 MANUAL 6 SPD O/D TRANS, TREMEC (M12)	12523284	1	9.75	BEARING, REV IDLER GR (04.355) (AC–DELCO #12523284)	2–L4,137

4.433 SHAFT, Transmission Reverse Idler

97–02	Y 6–SPD M/TRANS (MM6) ..	12369469	1	21.75	SHAFT, REV IDLER GR	2–L4,138
01–02	YY37 MANUAL 6 SPD O/D TRANS, TREMEC (M12)	12369469	1	21.75	SHAFT, REV IDLER GR	2–L4,138

4.435 BRACKET, Transmission Reverse Idler Shaft

97–02	Y 6–SPD M/TRANS (MM6) ..	12369470	1	25.25	BRACKET, REV IDLER GR SHF ..	2–L4,134
01–02	YY37 MANUAL 6 SPD O/D TRANS, TREMEC (M12) ...	12369470	1	25.25	BRACKET, REV IDLER GR SHF ..	2–L4,134

cardiagn.com

0.386 COVER – PLUG, Engine Camshaft & Valve Rocker [8–CYLINDER]

97–98	Y 5.7G (LS1)	12559603	RH	51.00	COVER, VLV RKR ARM (INCLS ATTACH BOLTS)
97–98	Y 5.7G (LS1)	12559604	LH	51.50	COVER, VLV RKR ARM (INCLS ATTACH BOLTS)
99–00	Y 5.7G (LS1)	12559894	LH	53.75	COVER, VLV RKR ARM
99–00	Y 5.7G (LS1)	12561819	RH	58.50	COVER, VLV RKR ARM
01–02	Y 5.7S (LS6)	12561818	RH	53.25	COVER, VLV RKR ARM (THREE RAISED BOSS AREA)
01–02	Y 5.7G (LS1)	12561818	RH	53.25	COVER, VLV RKR ARM (THREE RAISED BOSS AREA)
01–02	Y 5.7G (LS1)	12361820	LH	53.25	COVER, VLV RKR ARM
01–02	Y 5.7S (LS6)	12561820	LH	53.25	COVER, VLV RKR ARM

0.830 PEDAL, Engine Clutch [8–CYLINDER]

97–00	Y 6–SPD M/TRANS (MM6)	12552447	1	69.00	PEDAL, CLU
01–02	Y 6–SPD M/TRANS (MM6), MANUAL 6 SPD O/D TRANS, TREMEC (M12)	12552447	1	69.00	PEDAL, CLU

1.055 BOLT KIT – BRACKET – CONNECTOR – FAN KIT – MOTOR KIT – NUT – RELAY, Engine Air Cooling (Electrical)

Note. FOR ADDITIONAL INFORMATION, SEE ELECTRIC COOLING MOTOR AND FAN APPLICATION CHARTS IN THE REFERENCE CATALOG (CODE 88R).

97–02	Y	12177234	1	12.68	RELAY, FAN CONT (1–SERIES/PARALLEL) (SPDT), 1–(HIGH SPEED) (S) (5–TERMINAL, SPLY, 200 MINI) (AC–DELCO #15–8720)
97–02	Y	12193604	AR	23.80	RELAY, FAN CONT (GRAY) (SPST 280 MINI) (4–TERMINAL) (09.778) (AC–DELCO #15–8733)
	*EXPORT*********EXPORT*********EXPORT*********EXPORT*********EXPORT*				
97	YY07 SIG & MKR LP (T80) (EXPORT)	12193602	1	17.38	RELAY, FAN CONT (BLACK) (SPDT 280 MINI) (5–TERMINAL) (02.100) (AC–DELCO #D964A)

1.007 BOLT – COVER – HOSE – PIPE – SEAL – STUD, Engine Coolant By–Pass

97–99	Y 5.7G (LS1)	11514004	4	11.91	BOLT, ENG COOL AIR BL PIPE (M6X1.0X30) (GA 900)
01–02	Y 5.7G (LS1)	12562780	3	3.90	COVER, ENG COOL AIR BL PIPE HOLE
02	Y 5.7S (LS6)	12562780	2	3.90	COVER, ENG COOL AIR BL PIPE HOLE
97–00	Y 5.7G (LS1)	12562166	1	11.47	HOSE, ENG COOL AIR BL
00	Y 5.7G (LS1)	12562166	1	11.47	HOSE, ENG COOL AIR BL
01–02	Y 5.7G (LS1)	12568476	1	6.01	HOSE, ENG COOL AIR BL
01–02	Y 5.7S (LS6)	12568476	1	6.01	HOSE, ENG COOL AIR BL
97–99	Y 5.7G (LS1)	12562160	1	39.50	PIPE, ENG COOL AIR BL
00	Y 5.7G (LS1)	12562160	1	39.50	PIPE, ENG COOL AIR BL
01–02	Y 5.7G (LS1)	12568478	1	19.50	PIPE, ENG COOL AIR BL
01–02	Y 5.7S (LS6)	12568478	1	19.50	PIPE, ENG COOL AIR BL
97–00	Y 5.7G (LS1)	12531923	4	0.93	SEAL, ENG COOL AIR BL PIPE (O RING)
01–02	Y 5.7G (LS1)	12561033	2	0.93	SEAL, ENG COOL AIR BL PIPE (O RING)
01–02	Y 5.7G (LS6)	12561033	2	0.93	SEAL, ENG COOL AIR BL PIPE (O RING)
98–02	Y 5.7G (LS1)	12561040	2	3.50	STUD, ENG COOL AIR BL PIPE
01–02	Y 5.7S (LS6)	12561040	2	3.50	STUD, ENG COOL AIR BL PIPE

cardiagn.com

1.166 CLAMP, Hose (Radiator, Heater, A/C)

97–98	Y	15024902	1	5.08	CLAMP, RAD INL HOSE ENG (GRAY FINISH) (42MM) (08.948)
97–98	Y	15024902	1	5.08	CLAMP, RAD INL HOSE RAD (GRAY FINISH) (42MM) (08.948)
97–98	Y	15024902	1	7.73	CLAMP, RAD OTLT HOSE ENG (50MM)
97–98	Y	15024902	1	5.08	CLAMP, RAD OTLT HOSE RAD (GRAY FINISH) (42MM) (08.948)
97–98	Y 5.7G (LS1)	01623010	4	*.74	CLAMP, SECD AIR INJN CHK VLV HOSE (01.762)
99–02	Y	01623010	4	*.74	CLAMP, SECD AIR INJN CHK VLV HOSE (01.762)

1.836 FILTER, Engine Oil Filter

97–02	Y 5.7G (LS1)	25010633	1	N.L.	FILTER, OIL (PF44) (AC–DELCO #PF44) (DURAGUARD)
97–00	Y 5.7G (LS1)	25329388	1	N.L.	FILTER, OIL (AC–DELCO #SPF44) (DURAGUARD SILVER)
97–00	Y 5.7G (LS1)	25329389	1	N.L.	FILTER, OIL (AC–DELCO #UPF44) (ULTRAGUARD GOLD)
01–02	Y 5.7S (LS6)	25010633	1	N.L.	FILTER, OIL (PF44) (AC–DELCO #PF44) (DURAGUARD)

4.196 BOLT -- GASKET, Transmission Oil Pan [AUTOMATIC]

97–02	Y 4–SPD A/TRANS (M30)	08664799	1	7.60	GASKET, A/TRNS FLUID PAN (AC–DELCO #8664799)

4.197 BOLT -- COVER – FILTER KIT, Transmission Oil Suction Tube [AUTOMATIC]

97–02	Y 4–SPD A/TRANS (M30)	24208574	1	25.60	FILTER KIT, A/TRNS FLUID (DEEP SUMP) (INCLS FILTER, GASKET, SEAL & INSTR SHT) (AC–DELCO #24208574)

4.329 BOLT -- SENSOR, Speedometer Drive [AUTOMATIC]

97–01	Y	12369459	1	4.63	BOLT, VEH SPD SEN (AC–DELCO #12369459)
02	Y 5.7G (LS1) 4–SPD A/TRANS (M30), 6–SPD M/TRANS (MM6), 2.73R (GU2), 3.42R (GU6), 3.15R (G90)	12369459	1	4.63	BOLT, VEH SPD SEN (AC–DELCO #12369459)
02	YY 5.7S (LS6), MANUAL 6 SPD O/D TRANS TREMEC (M12), 3.42R (GU6)	12369459	1	4.63	BOLT, VEH SPD SEN (AC–DELCO #12369459)
02	YY37 5.7S (LS6), MANUAL 6 SPD O/D TRANS, TREMEC (M12), 3.42R (GU6)	12369459	7	4.63	BOLT, VEH SPD SEN (AC–DELCO #12369459)
97–01	Y	12369458	1	37.70	SENSOR, VEH SPD (AC–DELCO #213–344)
02	Y 5.7G (LS1), 4–SPD A/TRANS (M30), 6–SPD M/TRANS (MM6), 2.73R (GU2), 3.42R (GU6), 3.15R (G90)	12369458	1	37.70	SENSOR, VEH SPD (AC–DELCO #213–344)
02	YY37 5.7S (LS6), MANUAL 6 SPD O/D TRANS, TREMEC (M12), 3.42R (GU6)	12369458	1	37.70	SENSOR, VEH SPD (AC–DELCO #213–344)

4.365 BEARING, Transmission Main Drive Gear (Ball) [AUTOMATIC]

01–02	YY37 MANUAL 6 SPD O/D TRANS TREMEC (M12)	88894051	1	32.80	BEARING, MAIN DRIVE GEAR

cardiagn.com

4.625 PEDAL, Brake

97–02	Y 4–SPD A/TRANS (M30)	10253660	1	106.00	PEDAL, BRK
97–00	Y 6–SPD M/TRANS (MM6)	10262012	1	106.00	PEDAL, BRK
01–02	Y 6–SPD M/TRANS (MM6), MANUAL 6 SPD O/D TRANS, TREMEC (M12)	10262012	1	106.00	PEDAL, BRK

4.710 BOLT – BRACKET – CONNECTOR – SENSOR – SWITCH, Electronic Brake Control

Note: AT TIMES THE BRAKE SENSOR IS SERVICED ONLY AS PART OF THE REAR WHEEL HUB ASSEMBLY LOCATED IN GROUP 5.806

98–00	Y	12102748	1	23.93	CONNECTOR, SEN–BRK PRESS MOD VLV PRESS (BLACK) (3–WAY F) (W/LEADS) (02.535) (AC–DELCO #PT375)
98	Y07–67 FRT ABS BRAKE LOC (JAG)	12102748	1	23.93	CONNECTOR, SEN–BRK PRESS MOD VLV PRESS (BLACK) (3–WAY F) (W/LEADS) (02.535) (AC–DELCO #PT375)
98–02	Y	12146121	1	1.58	CONNECTOR, SEN–VEH LATL (3–WAY F) (02.170)
02	Y 4–SPD A/TRANS (M30), A/C FRT AUTO/AUX CONT (CJ2), T&T WHL (N37), (EXC TAIL & S/LP (T89) (EXPORT)	12146121	1	1.58	CONNECTOR, SEN–VEH LATL (3–WAY F) (02.170)
97–02	Y	12102632	1	21.83	CONNECTOR, SW–ELEK TRACT CONT (BLACK) (6–WAY F) (W/LEADS) (09.656) (AC–DELCO #PT319)
02	YY67 4–SPD A/TRANS (M30), A/C FRT AUTO/AUX CONT (CJ2), T&T WHL (N37), (EXC TAIL & S/LP (T89) (EXPORT)	12102632	1	21.83	CONNECTOR, SW–ELEK TRACT CONT (BLACK) (6–WAY F) (W/LEADS) (09.656) (AC–DELCO #PT319)
97–02	Y	11516210	1	21.90	SWITCH, ELEK BRK CONT BRK PED (W/ S/LP SW)
97	Y (EXC CHASSIS REALTIME DAMPING (F45)	12135154	1	42.00	SWITCH, ELEK TRAC CONT (W/ASR, W/O RTD)
98–99	Y (EXC CHASSIS, REALTIME DAMPING (F45), ACTIVE BRAKE CTL (JL4)	12135154	1	42.00	SWITCH, ELEK TRAC CONT
98–99	Y ACTIVE BRAKE CTL (JL4), (EXC CHASSIS, REALTIME DAMPING (F45)	12198726	1	42.00	SWITCH, ELEK TRAC CONT
00	Y (C88) (EXC CHASSIS, REALTIME DAMPING (F45), ACTIVE BRAKE CTL (JL4)	10440629	1	67.50	SWITCH, ELEK TRAC CONT
00	Y ACTIVE BRAKE CTL (JL4), (EXC C88), CHASSIS REALTIME DAMPING (F45)	10440631	1		SWITCH, ELEK TRAC CONT
00	Y (EXC C88), CHASSIS, REALTIME DAMPING (F45) ACTIVE BRAKE CTL (JL4)	12135154	1	42.00	SWITCH, ELEK TRAC CONT
01	Y07–67 ACTIVE BRAKE CTL (JL4), (EXC C88), CHASSIS REALTIME DAMPING (F45)	10440631	1		SWITCH ELEK TRAC CONT
01	Y37 (EXC C88)	10440631	1		SWITCH, ELEK TRAC CONT
02	Y (EXC C88), CHASSIS, REALTIME DAMPING (F45)	10440631	1		SWITCH, ELEK TRAC CONT

cardiagn.com

4.710 BOLT – BRACKET – CONNECTOR – SENSOR – SWITCH, Electronic Brake Control(Con't)

*EXPORT***************EXPORT***************EXPORT***************EXPORT***************EXPORT*

00–01	Y07–67 ACTIVE BRAKE CTL (JL4), (EXC CHASSIS, REALTIME DAMPING (F45), (C88)	12198726	1	42.00	SWITCH, ELEK TRAC CONT .....
02	Y (EXC CHASSIS, REALTIME DAMPING (F45), (C88)	12198726	1	42.00	SWITCH, ELEK TRAC CONT .....

4.720 BOLT – CONNECTOR – CONNECTOR KIT – HARNESS – MODULE – PLATE – RELAY – RETAINER – WIRE, Electronic Brake Control

97–02	Y CHASSIS, REALTIME DAMPING (F45)	14090618	1	8.08	PLATE, ELEK BRK CONT WRG HARN GROM TAP (03.675) .....
97	Y (EXC SIG & MKR LP (T90) (EXPORT)	12088567	1	16.45	RELAY, ELEK BRK CONT (GRAY) (1 - WAY) (09.277) (AC–DELCO #15–8571) .....
99	Y37 (EXC ACTIVE BRAKE CTL (JL4), P/S (VARIABLE) (NV7), FRT FOG LP (T96)	12129232	1	3.50	RETAINER, ELEK BRK CONT WRG HARN MDL CONN (32–WAY FEMALE MIC/P 100W RETAINER, CLEAR) .....

5.505 CARRIER, Differential, with Cap

97–02	Y 6–SPD M/TRANS (MM6)	12551769	1	1364.97	CARRIER, DIFF (W/GEARS) (3 42 RATIO) .....
97–02	Y 4–SPD A/TRANS (M30), 2.73R (GU2)	12554837	1	1398.26	CARRIER, DIFF (2.73 RATIO) (W/GEARS) (05 546) .....
97–02	Y 5 7G (LS1), 4 -SPD A/TRANS (M30), 3 15R (G90)	12556313	1	1392.02	CARRIER, DIFF (3.15 RATIO) .....
01	YY37 MANUAL 6 SPD O/D TRANS, TREMEC (M12), 3 42R (GU6)	12561853	1	1351.68	CARRIER, DIFF .....
02	YY37 5.7S (LS6), MANUAL 6 SPD O/D TRANS, TREMEC (M12), 3 42R (GU6) ..	12572683	1		CARRIER, DIFF .....

5.546 ADAPTER – BOLT – PIN – PLUG – SUPPORT, Front Propeller Shaft

97–99	Y 6- SPD M/TRANS (MM6) .	12456201	1	1364.97	SUPPORT, DRIVELINE (PART OF DRIVELINE SUPPORT COMPLETE ASM) (INCLS HOUSING AND PIN)
97–99	Y 4 - SPD A/TRANS (M30)	12456224	1	1077.83	SUPPORT, DRIVELINE (PART OF DRIVELINE SUPPORT COMPLETE ASM) (INCLS HOUSING AND PIN)
97–02	Y 4 SPD A/TRANS (M30)	12564466	1	1613.38	SUPPORT DRIVELINE (COMPLETE ASM) (COMPONENT PARTS SERVICED)
97–02	Y 6 SPD M/TRANS (MM6)	12564467	1	1274.47	SUPPORT, DRIVELINE (COMPLETE ASM) (COMPONENT PARTS SERVICED)
00	Y 6 SPD M/TRANS (MM6)	88893094	1	1783.03	SUPPORT DRIVELINE (W/PINS)
00–02	Y 4 SPD A/TRANS (M30)	88893099	1	1783.03	SUPPORT, DRIVELINE .
0	Y MANUAL 6 SPD O-D TRANS, TREMEC (M12)	12564467	1	1274.47	SUPPORT DRIVELINE (COMPLETE ASM) (COMPONENT PARTS SERVICED)
01–02	Y 6 SPD M TRANS (MM6), MANUAL 6 SPD O D TRANS, TREMEC (M12)	88893094	1	1783.03	SUPPORT, DRIVELINE (W/PINS)

cardiagn.com

6.518 BOLT – BUMPER – COLUMN – COVER – COVER KIT – GUIDE – HOUSING – JACKET – PLUG – RING – SHROUD – SPRING – SUPPORT, Steering

97–98	Y	26047460	1	1027.89	COLUMN, STRG
98	Y07–67 STRG COL (NP7) (EXPORT)	26071322	1	1183.42	COLUMN, STRG
99–00	Y T&T WHL (N37)	26070626	1	1423.23	COLUMN, STRG
99–00	Y07–67 (EXC STRG COL (NP7) (EXPORT), T&T WHL (N37)	26070622	1	1183.95	COLUMN, STRG
99–00	Y07–67 STRG COL (NP7) (EXPORT)	26070623	1	1183.95	COLUMN, STRG
99	Y37 P/S (VARIABLE) (NV7)	26070622	1	1183.95	COLUMN, STRG
00	Y37	26070622	1	1183.95	COLUMN, STRG
01	Y07–67 6–SPD M/TRANS (MM6), (EXC STRG COL (NP7) (EXPORT), T&T WHL (N37)	26079636	1	910.34	COLUMN, STRG
01	Y07–67 6–SPD M/TRANS (MM6), T&T WHL (N37)	26079640	1	1423.23	COLUMN, STRG
01	Y07–67 4–SPD A/TRANS (M30), T&T WHL (N37)	26080426	1	1423.23	COLUMN, STRG
01	Y07–67 4–SPD A/TRANS (M30), (EXC STRG COL (NP7) (EXPORT), T&T WHL (N37)	26080430	1	910.34	COLUMN, STRG
01	Y37 MANUAL 6 SPD O/D TRANS, TREMEC (M12)	26079636	1	910.34	COLUMN, STRG
02	Y07–67 6–SPD M/TRANS (MM6), T&T WHL (N37)	26094231	1	1402.20	COLUMN, STRG
02	Y07–67 4–SPD A/TRANS (M30), T&T WHL (N37)	26094232	1	1402.20	COLUMN, STRG
02	Y07–67 6–SPD M/TRANS (MM6), (EXC STRG COL (NP7) (EXPORT), T&T WHL (N37)	26094233	1	896.88	COLUMN, STRG
02	Y07–67 4–SPD A/TRANS (M30), (EXC STRG COL (NP7) (EXPORT), T&T WHL (N37)	26094235	1	896.88	COLUMN, STRG
02	Y37 MANUAL 6 SPD O/D TRANS, TREMEC (M12)	26094233	1	896.88	COLUMN STRG
	EXPORT	*EXPORT*	*EXPORT*	*EXPORT*	*EXPORT*
01	Y STRG COL (NP7) (EXPORT)	26079637	1	910.34	COLUMN, STRG
02	Y STRG COL (NP7) (EXPORT)	26094234	1	896.88	COLUMN, STRG

6.606 BOLT – BRACE – BRACKET, Steering Pump Mounting

97–02	Y	12555220	1	55.81	BRACKET, GEN & P/S PUMP (02 277)

6.635 BRACKET – CAP – RESERVOIR – SEAL, Steering Pump

97–02	Y	12555222	1	3.38	BRACKET, P/S FLUID RSVR

6.760 BRACKET – SHIM, Steering Column Attaching

97–02	Y	10402879	1	155.02	BRACKET, STRG COL (#52)

7.450 BRACKET – BULB – CONNECTOR – COVER – KNOB – MODULE – RELAY – RETAINER – SWITCH, Electronic Control Suspension

97–02	Y CHASSIS, REALTIME DAMPING (F45)	10280844	1	6.66	BRACKET, ELEK SUSP CONT MDL
01–02	Y	12160778	1	1.02	CONNECTOR INLINE - TO ELEK SUSP MDL (BROWN) (24 WAY F) (W/O LEADS) (MIC/PAC 100) (03 670)
01–02	Y	12160779	1	2.23	CONNECTOR INLINE - TO ELEK SUSP MDL (BROWN) (32 WAY F, W/O LEADS, MIC/PAC 100) (03 670)

cardiagn.com

7.450 BRACKET – BULB – CONNECTOR – COVER – KNOB – MODULE – RELAY – RETAINER – SWITCH, Electronic Control Suspension(Con't)

97–02	Y	12102747	1	21.73	CONNECTOR, INLINE–TO S/ABS CONT ACTR (BLACK) (2–WAY F W/LEADS) (03.670) (AC–DELCO #PT374)
97	Y	12110207	1	2.28	CONNECTOR, MDL–ELEK SUSP CONT (BLUE) (32–WAY F W/O LEADSS) (03.670)
97–02	Y	12160778	1	1.02	CONNECTOR, MDL–ELEK SUSP CONT (BROWN) (24–WAY F) (W/O LEADS) (MIC/PAC 100) (03.670)
97–00	Y	12160779	1	2.23	CONNECTOR, MDL–ELEK SUSP CONT (BROWN) (32–WAY F, W/O LEADS, MIC/PAC 100) (03.670)
01–02	Y	12126463	1	45.66	CONNECTOR, SW–ELEK SUSP (BLACK) (2–WAY F) (W/LEADS) (02.530) (AC–DELCO #PT733)
97	Y07 CHASSIS, REALTIME DAMPING (F45)	10286260	LH	9.60	COVER, ELEK SUSP CONT MDL FIN
98–00	Y07–67 CHASSIS, REALTIME DAMPING (F45)	10286260	LH	9.60	COVER, ELEK SUSP CONT MDL FIN
01–02	Y07 CHASSIS, REALTIME DAMPING (F45)	10286260	LH	9.60	COVER, ELEK SUSP CONT MDL FIN
01–02	Y67 CHASSIS, REALTIME DAMPING (F45), (19I)	10440580	1	9.45	COVER, ELEK SUSP CONT MDL FIN (BLACK)
01–02	Y67 CHASSIS, REALTIME DAMPING (F45), (92I)	10440581	1	9.45	COVER, ELEK SUSP CONT MDL FIN (PEWTER)
01–02	Y67 CHASSIS, REALTIME DAMPING (F45), (67I)	10440582	1	9.45	COVER, ELEK SUSP CONT MDL FIN (OAK)
01–02	Y67 CHASSIS, REALTIME DAMPING (F45), (70I)	10440583	1	9.45	COVER, ELEK SUSP CONT MDL FIN (RED)
97–99	Y CHASSIS, REALTIME DAMPING (F45), (EXC EUROPEAN PROVISIONS (VD1) (EXPORT)	09360581	1	934.00	MODULE, ELEK SUSP CONT (RTD MODULE/FAST SHOCK) (AC–DELCO #9460581)
00–02	YY07–67 CHASSIS, REALTIME DAMPING (F45)	09366711	1	695.00	MODULE, ELEK SUSP CONT
97–98	Y	12088667	1	16.45	RELAY, ROAD SENSING SUSP DPNR (GRAY) (4–WAY) (09.277) (AC–DELCO #15–8571)
97–02	Y07 CHASSIS, REALTIME DAMPING (F45)	10267772	1	3.45	RETAINER, ELEC SUSP CONT MDL FIN CVR (14.640)
98–01	Y67 CHASSIS, REALTIME DAMPING (F45)	10267772	1	3.45	RETAINER, ELEC SUSP CONT MDL FIN CVR (14.640)
02	Y67 CHASSIS, REALTIME DAMPING (F45)	10267772	1	3.45	RETAINER, ELEC SUSP CONT MDL FIN CVR (14.640)
	*EXPORT*****EXPORT*****EXPORT*****EXPORT*****EXPORT*				
98–99	Y07–67 CHASSIS, REALTIME DAMPING (F45), EUROPEAN PROVISIONS (VD1) (EXPORT)	09360571	1	695.00	MODULE, ELEK SUSP CONT (RTD MODULE/FAST SHOCK)

8.010 SEAL, Hood Panel

97–02	Y	10270455	1	26.50	SEAL, HOOD RR (EPDM EXTRUSION, RR)
97–02	Y	10270456	1	26.50	SEAL, HOOD RR (EPDM EXTRUSION, BARRIER SEAL)
97–02	Y	10404247	2	22.15	SEAL, HOOD RR (HOOD SIDE TO FENDER)

cardiagn.com

8.077 BRACKET – CONNECTOR, Hood Latch Release Cable

97–02	Y	12102747	1	21.73	CONNECTOR, SW–HOOD AJAR IND (BLACK) (2–WAY F W/LEADS) (03.670) (AC–DELCO #PT374)
	*EXPORT***************EXPORT***************EXPORT***************EXPORT***************EXPORT*				
97–02	Y EUROPEAN PROVISIONS (VD1) (EXPORT)	10285408	1	4.55	BRACKET, HOOD AJAR IND LP SW

8.808 FLASHLIGHT – LABEL – TAG, Emission, Cautionary and Informative

02	Y ARABIC LANGUAGE LABEL (VBX)	15053409	1	9.25	LABEL, A/C REFRIG & BAT & FAN BLADE & RAD FIL CAP CAUTION
01–02	Y07–67 ARABIC LANGUAGE LABEL (VBX)	15746390	1	9.25	LABEL, BAT CAUTION
97–98	Y F/SEAT INFL RST SYS (AK5), MAN RST SYS (AX4) (EXPORT)	10426427	1	9.25	LABEL, CHILD ST LOCATION
97	Y	12556699	1	N.L.	LABEL, DRIVETRAIN REMOVAL NTC
98–99	Y 6–SPD M/TRANS (MM6)	12556699	1	N.L.	LABEL, DRIVETRAIN REMOVAL NTC
00	Y 6–SPD M/TRANS (MM6), 4–SPD A/TRANS (M30)	12556699	1	N.L.	LABEL, DRIVETRAIN REMOVAL NTC
01–02	Y 6–SPD M/TRANS (MM6), MANUAL 6 SPD O/D TRANS, TREMEC (M12), 4–SPD A/TRANS (M30)	12556699	1	N.L.	LABEL, DRIVETRAIN REMOVAL NTC
97–98	Y	10292511	1	9.25	LABEL, FAN BLADE & INFL RST & ENG CLG & A/C REFRIG CAUTION
99	Y (1ST DES)	10292511	1	9.25	LABEL, FAN BLADE & INFL RST & ENG CLG & A/C REFRIG CAUTION (1ST DES VEH W/ EVAP TUBE ORIFICE ON RR TUBE; 2ND DES SEE 10432250)
99	Y (2ND DES)	10432250	1	9.25	LABEL, FAN BLADE & INFL RST & ENG CLG & A/C REFRIG CAUTION (2ND DES VEH W/ EVAP TUBE ORIFICE ON FRT TUBE;1ST DES SEE 10292511)
00	Y	10432250	1	9.25	LABEL, FAN BLADE & INFL RST & ENG CLG & A/C REFRIG CAUTION (EVAP TUBE ORIFICE ON FRT TUBE)
01–02	Y	10308343	1	9.25	LABEL, FAN BLADE & INFL RST & ENG CLG & A/C REFRIG CAUTION (EVAP TUBE ORIFICE ON FRT TUBE)
97–02	Y	10299831	1	9.25	LABEL, I/P PASS KNEE BOLS PNL IDENT
97	Y	15001737	2	9.25	LABEL, INFL RST SYS CAUTION (140.0X40.0)
98–00	Y07–67 CANADIAN (Z49)	10408963	2	9.25	LABEL, INFL RST SYS CAUTION (130.0X65.0)
98–99	Y07–67 (EXC CANADIAN (Z49)	15001737	2	9.25	LABEL, INFL RST SYS CAUTION (140.0X40.0)
99–00	Y37 CANADIAN (Z49)	10408963	2	9.25	LABEL, INFL RST SYS CAUTION (130.0X65.0)
99	Y37 (EXC CANADIAN (Z49)	15001737	2	9.25	LABEL, INFL RST SYS CAUTION (140.0X40.0)
00–02	Y (C88), (EXC CANADIAN (Z49)	15002610	2	9.25	LABEL, INFL RST SYS CAUTION
98	Y F/SEAT INFL RST SYS (AK5)	15012285	1	9.25	LABEL, INFL RST SYS INFO (NEXT GENERATION AIR BAG)
97–02	Y F/SEAT INFL RST SYS (AK5)	26017966	1	9.25	LABEL, INFL RST SYS SERV NTC
00–02	Y	15766394	1	9.25	LABEL, MERCURY DISPOSAL NTC
97–02	Y	10443718	AR	9.25	LABEL, ODOM SERV NTC (ENGLISH AND FRENCH)
01–02	YY37	09594076	1	9.25	LABEL, TIRE MAX SPD CAUTION

cardiagn.com

8.808 FLASHLIGHT – LABEL – TAG, Emission, Cautionary and Informative(Con't)

97	Y 5.7G (LS1), FED EMIS SYS (NF2), (EXC POWERTRAIN CONT MODULE (K29), LEADED FUEL EMIS EXPORT (NM8), CANADIAN (Z49)	12558627	1	9.25	LABEL, VEH EMIS CONT INFO (AKB)
97	Y 5.7G (LS1), CALIF EMIS, TIER 1 (NB6)	12558628	1	9.25	LABEL, VEH EMIS CONT INFO (AKC)
97	Y 5.7G (LS1), FED EMIS SYS (NF2), CANADIAN (Z49), (EXC LEADED FUEL EMIS EXPORT (NM8)	12558629	1	9.25	LABEL, VEH EMIS CONT INFO (AKD)
98	Y 5.7G (LS1), FED EMIS SYS (NF2), (EXC LEADED FUEL EMIS EXPORT (NM8), EMIS OVERRIDE (NN5), POWERTRAIN CONT MODULE (K29)	12559752	1	9.25	LABEL, VEH EMIS CONT INFO (FJU)
99	Y 5.7G (LS1), FED EMIS SYS (NF2), (EXC POWERTRAIN CONT MODULE (K29)	12560553	1	9.25	LABEL, VEH EMIS CONT INFO (LAC)
99	Y 5.7G (LS1), CALIF EMIS, TIER 1 (NB6), (EXC POWERTRAIN CONT MODULE (K29), CANADIAN (Z49)	12560554	1	9.25	LABEL, VEH EMIS CONT INFO (LAD)
00	Y 5.7G (LS1), FED EMIS SYS (NF2), (EXC POWERTRAIN CONT MODULE (K29)	12562425	1	9.25	LABEL, VEH EMIS CONT INFO (PAY)
00	Y 5.7G (LS1), CALIF EMIS LEV (NC1), (EXC POWERTRAIN CONT MODULE (K29)	12562426	1	9.25	LABEL, VEH EMIS CONT INFO (PAZ)
01	Y 5.7G (LS1)	12564047	1	8.75	LABEL, VEH EMIS CONT INFO (NYB)
01	Y 5.7S (LS6)	12572217	1	9.25	LABEL, VEH EMIS CONT INFO (NYC)
02	Y 5.7G (LS1)	12565747	1	9.25	LABEL, VEH EMIS CONT INFO (CYA)
02	Y 5.7S (LS6)	12570324	1	9.25	LABEL, VEH EMIS CONT INFO (CYB)
97–00	Y	15002618	1	9.55	TAG, INFL RST I/P MDL CAUTION
01–02	Y	10447122	1	9.55	TAG, INFL RST I/P MDL CAUTION
	*EXPORT**************EXPORT**************EXPORT**************EXPORT**************EXPORT*				
99–00	Y F/SEAT INFL RST SYS (AK5), MAN RST SYS (AX4) (EXPORT)	10426427	1	9.25	LABEL, CHILD ST LOCATION
01–02	Y F/SEAT INFL RST SYS (AK5), LABEL CHILD SEAT LOCATION (VJ4) (EXPORT)	10426427	1	9.25	LABEL, CHILD ST LOCATION
00–02	Y07–67 (EXC C88)	15001737	2	9.25	LABEL, INFL RST SYS CAUTION (140.0X40.0)
01–02	Y07–67 ARABIC LANGUAGE LABEL (VBX)	15749556	2	9.25	LABEL, INFL RST SYS CAUTION (ARABIC)
98	Y 5.7G (LS1), EMIS OVERRIDE (NN5), (EXC POWERTRAIN CONT MODULE (K29), LEADED FUEL EMIS EXPORT (NM8) CANADIAN (Z49)	12360250	1	9.25	LABEL, VEH EMIS CONT INFO (FNS)

8.890 CONNECTOR – HARNESS – LAMP, Underhood

97–98	Y	12101899	1	18.52	CONNECTOR, LP-U/HOOD (BLACK) (2-WAY F W/LEADS) (C2 383) (AC-DELCO #PT169)
97–00	Y	12162000	1	.58	CONNECTOR, LP-U/HOOD (BLACK) (2-WAY M) (W/O LEADS) (02.530)
97–00	Y	12107120	1	24.44	CONNECTOR, LP-U/HOOD (BLACK) (2-WAY M) (W/LEADS) (04.720) (AC-DELCO #PT786)

cardiagn.com

8.890 CONNECTOR – HARNESS – LAMP, Underhood(Con't)

99–02	Y	12101899	1	18.52	CONNECTOR, LP–U/HOOD (BLACK) (2–WAY F W/LEADS) (02.383) (AC–DELCO #PT169)
97–98	Y	12163775	1	15.40	HARNESS, U/HOOD LP WRG
99–00	Y07–67	12163775	1	15.40	HARNESS, U/HOOD LP WRG
99–00	Y37 LP GRP (TR9)	12163775	1	15.40	HARNESS, U/HOOD LP WRG
01–02	Y	12163775	1	15.40	HARNESS, U/HOOD LP WRG
97–99	Y	25536936	1	12.50	LAMP, U/HOOD
00–02	Y	10303617	1	12.50	LAMP, U/HOOD

9.277 CONNECTOR – RELAY, A/C Electrical

97	Y (EXC SIG & MKR LP (T90) (EXPORT)	12088567	1	16.45	RELAY, A/C CMPR (GRAY) (4–WAY) (AC–DELCO #15–8571)
98–02	Y	12088567	1	16.45	RELAY, A/C CMPR (GRAY) (4–WAY) (AC–DELCO #15–8571)
99	Y	12177233	1	23.80	RELAY, A/C CMPR (5–TERMINAL) (AC–DELCO #15–8721)
98–99	Y	12177233	1	23.80	RELAY, BLO MOT (5–TERMINAL) (AC–DELCO #15–8721)
00	Y 6–SPD M/TRANS (MM6), 4–SPD A/TRANS (M30), A/C MAN CONT (C60)	12177233	1	23.80	RELAY, BLO MOT (5–TERMINAL) (AC–DELCO #15–8721)

9.281 CONNECTOR – HARNESS – HOSE – TANK, A/C Vacuum and Temperature

97–02	Y 5.7G (LS1)	12124136	1	4.20	HOSE, HTR & A/C CONT VAC TK (ENG HARN SECTION)
01–02	Y 5.7S (LS6)	12124136	1	4.20	HOSE, HTR & A/C CONT VAC TK (ENG HARN SECTION)

9.650 AMPLIFIER – CONNECTOR – RADIO – RELAY – SPEAKER, Radio Receiver

97–99	Y STEREO (UN0), SPEAKER SYSTEM 6 (UZ6)	16257601	1	1049.00	RADIO, AM/FM STEREO & CLK & CD PLYR (AC–DELCO #16257601)
00–02	Y STEREO (UN0), SPEAKER SYSTEM 6 (UZ6)	09390211	1	749.00	RADIO, AM/FM STEREO & CLK & CD PLYR (AC–DELCO #9390211)
97–99	Y STEREO, AM/FM W/AUTO REV CASSETTE, AUTO TONE (UL0), SPEAKER SYSTEM 6 (UZ6), (EXC JAPANESE RDO FREQ (UK1) (EXPORT), EUROPEAN RDO FREQ (UL2) (EXPORT)	16257631	1	689.00	RADIO, AM/FM STEREO & CLK & T/PLYR (AC–DELCO #16257631)
99–00	Y37 STEREO, AM/FM W/AUTO REV CASSETTE, AUTO TONE (UL0), 4 SPKR SYS (UQ5), (EXC JAPANESE RDO FREQ (UK1) (EXPORT), EUROPEAN RDO FREQ (UL2) (EXPORT)	16210221	1	519.00	RADIO, AM/FM STEREO & CLK & T/PLYR (AC–DELCO #16210221)
00–02	Y STEREO, AM/FM W/AUTO REV CASSETTE, AUTO TONE (UL0), SPEAKER SYSTEM 6 (UZ6), (EXC JAPANESE RDO FREQ (UK1) (EXPORT), EUROPEAN RDO FREQ (UL2) (EXPORT)	09390231	1	609.00	RADIO, AM/FM STEREO & CLK & T/PLYR (AC–DELCO #9390231)
97–02	Y	12193604	1	23.80	RELAY, RDO SPKR AMPF (GRAY) (SPST 280 MINI) (4–TERMINAL) (09.778) (AC–DELCO #15–8733)
97–02	Y SPEAKER SYSTEM 6 (UZ6)	10447356	2	319.00	SPEAKER, RDO FRT (3"TWIDDLER, 7' WOOFER, 100W AMP) (AC–DELCO #10447356)

cardiagn.com

9.650 AMPLIFIER – CONNECTOR – RADIO – RELAY – SPEAKER, Radio Receiver(Con't)

99–00	Y37 4 SPKR SYS (UQ5)	16255371	2	77.00	SPEAKER, RDO FRT (AC–DELCO #16255371) .....
	*EXPORT**********EXPORT**********EXPORT**********EXPORT**********EXPORT*				
97–99	Y STEREO, AM/FM W/AUTO REV CASSETTE, AUTO TONE (UL0), EUROPEAN RDO FREQ (UL2) (EXPORT), SPEAKER SYSTEM 6 (UZ6)	16257611	1	699.00	RADIO, AM/FM STEREO & CLK & T/PLYR (AC–DELCO #16257611) ....
97–99	Y JAPANESE RDO FREQ (UK1) (EXPORT), STEREO, AM/FM W/AUTO REV CASSETTE, AUTO TONE (UL0), SPEAKER SYSTEM 6 (UZ6)	16257621	1	689.00	RADIO, AM/FM STEREO & CLK & T/PLYR (AC–DELCO #16257621) ....
00–02	Y JAPANESE RDO FREQ (UK1) (EXPORT), STEREO, AM/FM W/AUTO REV CASSETTE, AUTO TONE (UL0), SPEAKER SYSTEM 6 (UZ6)	09390221	1	649.00	RADIO, AM/FM STEREO & CLK & T/PLYR (AC–DELCO #9390221) .....
00–02	Y STEREO, AM/FM W/AUTO REV CASSETTE, AUTO TONE (UL0), EUROPEAN RDO FREQ (UL2) (EXPORT), SPEAKER SYSTEM 6 (UZ6)	09390241	1	659.00	RADIO, AM/FM STEREO & CLK & T/PLYR (AC–DELCO #9390241) .....

9.765 BULB – CONNECTOR, Instrument Cluster Warning

97	Y	16056613	1	4.81	BULB, ELEK TRACT CONT IND LP (.5CP) (09.279) (AC–DELCO #16056613) .....
98	Y (EXC ACTIVE BRAKE CTL (JL4) ..	16056613	1	4.81	BULB, ELEK TRACT CONT IND LP (.5CP) (09.279) (AC–DELCO #16056613) .....
99	Y (EXC CHASSIS, REALTIME DAMPING (F45), ACTIVE BRAKE CTL (JL4)	16056613	1	4.81	BULB, ELEK TRACT CONT IND LP (.5CP) (09.279) (AC–DELCO #16056613) .....
99	YY07–67 CHASSIS, REALTIME DAMPING (F45), (EXC ACTIVE BRAKE CTL (JL4)	16056613	1	4.81	BULB, ELEK TRACT CONT IND LP (.5CP) (09.279) (AC–DELCO #16056613) .....
97–02	Y	12102747	1	21.73	CONNECTOR, LP–BRK IND (BLACK) (2–WAY F W/LEADS) (03.670) (AC–DELCO #PT374) .....
	*EXPORT**********EXPORT**********EXPORT**********EXPORT**********EXPORT*				
00–02	Y07–67 (EXC C88), ACTIVE BRAKE CTL (JL4)	16056613	1	4.81	BULB, ELEK TRACT CONT IND LP (.5CP) (09.279) (AC–DELCO #16056613) .....

9.778 BOLT – CONNECTOR – RELAY, Rear Window Defogger

97–98	Y07	12102561	1	11.89	CONNECTOR, INLINE–TO R/WDO DEFG (1–WAY F. W/LEADS) (02.535) (AC–DELCO #PT230) .....
98–02	Y67	12102561	1	11.89	CONNECTOR, INLINE–TO R/WDO DEFG (1–WAY F. W/LEADS) (02.535) (AC–DELCO #PT230) .....
99–02	Y07 SPEAKER SYSTEM 6 (UZ6) ...	12167133	2	12.95	CONNECTOR, INLINE–TO R/WDO DEFG (1–WAY F) (W/LEADS) (M/P 630 SELF LK) (AC–DELCO #PT798) .
99–00	Y37 (EXC MULTIPLE CD PLYR (U1S)	12167133	2	12.95	CONNECTOR, INLINE–TO R/WDO DEFG (1–WAY F) (W/LEADS) (M/P 630 SELF LK) (AC–DELCO #PT798) .

cardiagn.com

01–02	YY37	12167133	1	12.95	CONNECTOR, INLINE–TO R/WDO DEFG (1–WAY F) /W/LEADS) (M/P 630 SELF LK) (AC–DELCO #PT798)
97–02	Y	12193604	1	23.80	RELAY, R/WDO DEFG (GRAY) (SPST 280 MINI, (4–TERMINAL) (AC–DELCO #15–8733)

9.988 LAMP, Rear Compartment Lamp

97–98	Y	10258647	2	8.35	LAMP, CARGO
99–00	Y07–67	10258647	2	8.35	LAMP, CARGO
99–00	Y37 LP GRP (TR9)	10258647	2	8.35	LAMP, CARGO
01–02	Y	10258647	2	8.35	LAMP, CARGO

10.470 COVER – LOCK, Front Side Door

97–99	Y	16636582	RH	98.25	LOCK, FRT S/D (INCLS THEFT DET SWITCH & ACTUATOR)
97–02	Y	16640975	LH	96.25	LOCK, FRT S/D
00–02	Y (EXC CYL PASS DR (BCC) (EXPORT)	16639572	RH	77.00	LOCK, FRT S/D
	*EXPORT***************EXPORT***************EXPORT***************EXPORT***************EXPORT*				
00–02	Y CYL PASS DR (BCC) (EXPORT)	16636582	RH	98.25	LOCK, FRT S/D (INCLS THEFT DET SWITCH & ACTUATOR)

10.485 BATTERY – BOLT – BRACKET – BULB – CONNECTOR – MODULE – NUT – RECEIVER – SHIELD – TRANSMITTER, Door Electric and Vacuum Locks

99	Y37	10281420	4	3.33	BOLT, DR LK & SI WDO RLY (10.268)
97–02	Y	10281420	4	3.33	BOLT, FRT S/D CONT MDL (10.268)
97–02	Y	10282800	1	4.35	BRACKET, R/CON DR LK COVR
97–02	Y	12089527	2	2.35	CONNECTOR, MDL–FRT S/D CONT (GREEN) (6–WAY F) (16.263)
97–02	Y	12160773	4	.74	CONNECTOR, MDL–FRT S/D CONT (26–WAY F) (W/O LEADS)
97–02	Y	15305888	2	30.36	CONNECTOR, MDL–FRT S/D CONT (6–WAY F W/LEADS) (13.090) (AC–DELCO #PT1032)
01–02	Y 6–SPD M/TRANS (MM6), 4–SPD A/TRANS (M30)	12116247	1	20.05	CONNECTOR, MOT–DR LK ACTR (BLACK) (2–WAY M) (W/LEADS) (13.090) (AC–DELCO #PT288)
01–02	Y 5.7S (LS6), MANUAL 6 SPD O/D TRANS, TREMEC (M12)	12116247	1	20.05	CONNECTOR, MOT–DR LK ACTR (BLACK) (2–WAY M) (W/LEADS) (13.090) (AC–DELCO #PT298)
97–02	Y	12101856	2	18.83	CONNECTOR, SW–DR LK (GREEN) (2–WAY F, W/LEADS) (02.535) (AC–DELCO #PT248)
99	Y	09381399	1	331.59	MODULE, BODY CONT (02.560) (AC–DELCO #9381399)
00	Y	10304930	1	331.59	MODULE, BODY CONT (02.560) (AC–DELCO #10304930)
01–02	Y	10304931	1	331.59	MODULE, BODY CONT (02.560) (AC–DELCO #10304931)
97–99	Y	09352881	LH	218.00	MODULE, FRT S/D CONT (DRVR) (S/D LOCAL INTERFACE)
97–99	Y	09352891	RH	218.00	MODULE, FRT S/D CONT (PASS) (S/D LOCAL INTERFACE)
00–02	Y	09389689	LH	218.00	MODULE, FRT S/D CONT (DRVR) (S/D LOCAL INTERFACE)
00–02	Y	10435192	RH	218.00	MODULE, FRT S/D CONT (PASS) (S/D LOCAL INTERFACE)
97–02	Y	10295386	4	3.45	NUT, FRT S/D CONT MDL (M5 X .80) (SPECIAL AK SERIES) (14.683)

cardiagn.com

97–98	Y07	16625936	2	3.33	CLIP, R/CMPT LID LAT REL WRG HARN (R/CMPT L/WDO LATCH)
98–02	Y67	16625936	1	3.33	CLIP, R/CMPT LID LAT REL WRG HARN (F/TOP STOW CMPT LID LATCH)
98–02	Y67	16625936	1	3.33	CLIP, R/CMPT LID LAT REL WRG HARN (R/CMPT LID LATCH)
99–02	Y37	16625936	2	3.33	CLIP, R/CMPT LID LAT REL WRG HARN
02	YY	03816659	1	*.87	CLIP, R/CMPT LID LAT REL WRG HARN (7" ADJ, W/ROSEBUD FOR .25 DIA HOLE .031–.14 TH) (08.965)
99	Y07	12117371	2	25.70	CONNECTOR, MOT–R/CMPT LID PULDN ACTR (3–WAY M W/LEADS) (02.530) (AC–DELCO #PT504)
97–02	Y07 SPEAKER SYSTEM 6 (UZ6)	12101864	1	18.16	CONNECTOR, SW–R/CMPT LID AJAR IND (BLACK) (3–WAY F W/LEADS) (02.535) (AC–DELCO #PT256)
97–99	Y07	12117371	2	25.70	CONNECTOR, SW–R/CMPT LID AJAR IND (3–WAY M W/LEADS) (02.530) (AC–DELCO #PT504)
98–02	Y67 SPEAKER SYSTEM 6 (UZ6)	12101864	1	18.16	CONNECTOR, SW–R/CMPT LID AJAR IND (BLACK) (3–WAY F W/LEADS) (02.535) (AC–DELCO #PT256)
99–02	Y37	12101864	1	18.16	CONNECTOR, SW–R/CMPT LID AJAR IND (BLACK) (3–WAY F W/LEADS) (02.535) (AC–DELCO #PT256)
99–02	Y37	12117371	2	25.70	CONNECTOR, SW–R/CMPT LID AJAR IND (3–WAY M W/LEADS) (02.530) (AC–DELCO #PT504)
99–00	Y67	12117371	2	25.70	CONNECTOR, SW–R/CMPT LID AJAR IND (3–WAY M W/LEADS) (02.530) (AC–DELCO #PT504)
01–02	YY37	12101825	1	18.01	CONNECTOR, SW–R/CMPT LID REL (GRAY) (2–WAY F W/LEADS) (INDEX TAB CTR CAVITY A&B) (02.535) (AC–DELCO #PT217)
97–02	Y	12088567	1	16.45	RELAY, R/CMPT LID REL (GRAY) (4–WAY) (09.277) (AC–DELCO #15–8571)
97–02	Y (EXC EUROPEAN PROVISIONS (VD1) (EXPORT)	10276017	1	9.31	SWITCH, F/TNK FIL DR LK REL (03.028)
97–98	Y07	16608046	1	8.40	SWITCH, R/CMPT LID AJAR IND (LOCATED ON LAT IN TRUNK) (AC–DELCO #D1459C)
98–02	Y67	16608046	1	8.40	SWITCH, R/CMPT LID AJAR IND (LOCATED ON LAT IN TRUNK) (AC–DELCO #D1459C)
99–02	Y37	16608046	1	8.40	SWITCH, R/CMPT LID AJAR IND (LOCATED ON LAT IN TRUNK) (AC–DELCO #D1459C)
97–02	Y (EXC FRT FOG LP (T96), EUROPEAN PROVISIONS (VD1) (EXPORT)	12135157	1	57.96	SWITCH, R/CMPT LID REL (AC–DELCO #D7012C)
02	Y67	16608046	1	8.40	SWITCH, R/CMPT LID REL (LOCATED ON LAT IN TRUNK) (AC–DELCO #D1459C)
	*EXPORT**********EXPORT**********EXPORT**********EXPORT**********EXPORT*				
97–02	Y EUROPEAN PROVISIONS (VD1) (EXPORT)	10280957	1	66.19	SWITCH, R/CMPT LID & FUEL FIL DR REL (AC–DELCO #D7007C)

cardiagn.com

STRIPE – SWITCH, Fuel Tank Filler Door

97–02	Y	10275633	1	58.25	ACTUATOR, F/TNK FIL DR LK (INCLS FUEL DOOR RELEASE LEVER)
97–02	Y	10280943	1	3.45	BRACKET, F/TNK FIL DR LK ACTR
97–02	Y	03547884	2	.74	BUMPER, F/TNK FIL DR
97–02	Y	10276643	1	.17	BUMPER, F/TNK FIL DR HGE (10.263)
97–00	Y	12101888	1	18.01	CONNECTOR, SOL–F/TNK FIL DR LK ACTR (BLACK) (2–WAY F W/LEADS) (02.535) (AC–DELCO #PT159)
97–00	Y	10429498	1	140.00	DOOR, F/TNK FIL (SMC DR W/STEEL HGE)
01–02	Y	10443229	1	140.00	DOOR, F/TNK FIL (SMC DR W/STEEL HGE)
97–02	Y	03537631	1	3.45	NUT, F/TNK FIL DR LK ACTR (TO PCKT, POSN #1) (M8X1.0X4.3) (HEX)

12.975 REINFORCEMENT, Cargo Compartment and Floor

97–02	Y	10299652	LH	15.15	REINFORCEMENT, FLR K/UP PNL
97–02	Y	10299653	RH	15.15	REINFORCEMENT, FLR K/UP PNL

12.986 BRACE, Body Rear End (Plastic Laminated)

97–02	Y	10263983	LH	7.80	BRACE, R/CMPT PNL (127.9X126.3X66.5)
97–02	Y	10299078	RH	7.80	BRACE, R/CMPT PNL (127.9X126.3X73.1)
99–02	Y	10424152	2		BRACE, R/CMPT PNL (57.0X70.0X147.0)

13.090 BOLT – CLIP – CONNECTOR – GROMMET – HARNESS – RETAINER – WIRE, Body Wiring

97–02	Y	21020632	4	3.33	CLIP, BODY FRT WRG HARN
97	Y07	21020632	11	3.33	CLIP, BODY RR WRG HARN
98–02	Y	21020632	7	3.33	CLIP, BODY RR WRG HARN
97	Y	21020632	11	3.33	CLIP, BODY WRG HARN
98	Y67	12085481	1	18.12	CONNECTOR, INLINE–TO F/TOP HARN (BLACK) (2–WAY M W/LEADS) (02.535) (AC–DELCO #PT103)
98–00	Y67	12125621	1	15.46	CONNECTOR, INLINE–TO F/TOP HARN (2–WAY F) (W/LEADS) (12.243) (AC–DELCO #PT533)
01–02	YY67	12125621	1	15.46	CONNECTOR, INLINE–TO F/TOP HARN (2–WAY F) (W/LEADS) (12.243) (AC–DELCO #PT533)
97–02	Y	10412644	2	8.81	GROMMET, S/D WRG (LH & RH)
97–98	Y07	12189550	1	244.62	HARNESS, BODY FRT WRG
98	Y67 SPEAKER SYSTEM 6 (UZ6)	12189958	1	244.62	HARNESS, BODY FRT WRG
99–00	Y07 (EXC MULTIPLE CD PLYR (U1S)	12189597	1	244.62	HARNESS, BODY FRT WRG
99–00	Y07 MULTIPLE CD PLYR (U1S)	12189889	1	244.62	HARNESS, BODY FRT WRG
99–00	Y37 MULTIPLE CD PLYR (U1S)	12163772	1	244.62	HARNESS, BODY FRT WRG
99–00	Y37 (EXC MULTIPLE CD PLYR (U1S)	12189595	1	510.00	HARNESS, BODY FRT WRG
99–00	Y67 (EXC MULTIPLE CD PLYR (U1S)	12189599	1	244.62	HARNESS, BODY FRT WRG
99–00	Y67 MULTIPLE CD PLYR (U1S)	12189962	1	244.62	HARNESS, BODY FRT WRG
01–02	YY07 SPEAKER SYSTEM 6 (UZ6), (EXC MULTIPLE CD PLYR (U1S)	15329382	1		HARNESS, BODY FRT WRG
01–02	YY07 SPEAKER SYSTEM 6 (UZ6), MULTIPLE CD PLYR (U1S)	15329383	1	244.62	HARNESS, BODY FRT WRG
01–02	YY37	15329378	1		HARNESS, BODY FRT WRG
01–02	YY67 SPEAKER SYSTEM 6 (UZ6), (EXC MULTIPLE CD PLYR (U1S)	15329386	1	244.62	HARNESS, BODY FRT WRG

cardiagn.com

01–02	YY67 SPEAKER SYSTEM 6 (UZ6), MULTIPLE CD PLYR (U1S)	15329387	1	244.62	HARNESS, BODY FRT WRG .....
97–02	Y07 (EXC TAIL & S/LP (T89) (EXPORT), SPECIAL TAIL & S/LP (T93)	12130411	1	251.96	HARNESS, BODY RR WRG .....
98–99	Y67 (EXC TAIL & S/LP (T89) (EXPORT), SPECIAL TAIL & S/LP (T93)	12189532	1	526.79	HARNESS, BODY RR WRG .....
99	Y37 (EXC TAIL & S/LP (T89) (EXPORT), SPECIAL TAIL & S/LP (T93)	12189532	1	526.79	HARNESS, BODY RR WRG .....
00–02	Y07 SPECIAL TAIL & S/LP (T93), (EXC TAIL & S/LP (T89) (EXPORT) .	12189885	1	526.79	HARNESS, BODY RR WRG .....
00–02	Y37–67 (EXC TAIL & S/LP (T89) (EXPORT), SPECIAL TAIL & S/LP (T93)	12189532	1	526.79	HARNESS, BODY RR WRG .....
00–02	Y37–67 SPECIAL TAIL & S/LP (T93), (EXC TAIL & S/LP (T89) (EXPORT) .	12189534	1	526.79	HARNESS, BODY RR WRG .....
97–98	Y CONVENIENCE PKG (AAB), MAN RECL FRT BKT ST, DELUXE (AR9) .	10410580	1	66.23	HARNESS, D/SEAT ADJR WRG .....
97	Y07 MAN RECL FRT BKT ST, DELUXE (AR9), (EXC CONVENIENCE PKG (AAB)	10410691	1	66.23	HARNESS, D/SEAT ADJR WRG .....
98–00	Y07–67 MAN RECL FRT BKT ST, DELUXE (AR9), (EXC CONVENIENCE PKG (AAB)	10410691	1	66.23	HARNESS, D/SEAT ADJR WRG .....
99–00	Y07–67 CONVENIENCE PKG (AAB), MAN RECL FRT BKT ST, DELUXE (AR9), (EXC T&T WHL (N37)	10410580	1	66.23	HARNESS, D/SEAT ADJR WRG .....
99–00	Y07–67 CONVENIENCE PKG (AAB), MAN RECL FRT BKT ST, DELUXE (AR9), T&T WHL (N37) ...	12455471	1	66.23	HARNESS, D/SEAT ADJR WRG .....
99–00	Y37 6–WAY PWR D/SEAT ADJR (AG1), MAN RECL FRT BKT ST, DELUXE (AR9), (EXC CONVENIENCE PKG (AAB)	10410691	1	66.23	HARNESS, D/SEAT ADJR WRG .....
01–02	Y07–67 MAN RECL FRT BKT ST, DELUXE (AR9)	10410691	1	66.23	HARNESS, D/SEAT ADJR WRG .....
01	Y37 CONVENIENCE PKG (AAB), MAN RECL FRT BKT ST, DELUXE (AR9)	10410580	1	66.23	HARNESS, D/SEAT ADJR WRG .....
01–02	Y37 MAN RECL FRT BKT ST, DELUXE (AR9), (EXC CONVENIENCE PKG (AAB)	10410691	1	66.23	HARNESS, D/SEAT ADJR WRG ...
02	YY37 CONVENIENCE PKG (AAB), MAN RECL FRT BKT ST, DELUXE (AR9)	10410580	1	66.23	HARNESS, D/SEAT ADJR WRG .....
01–02	Y (EXC I/S RR VIEW MIR (DD8)	12189953	1		HARNESS, DM LP & I/S RR VIEW MIR RDG LP WRG ... .
97–00	Y	12163314	LH	263.90	HARNESS, DR LK & O/S RRVIEW MIR MEMORY INTERFACE MDL WRG ....
97–99	Y	12163315	RH	263.90	HARNESS, DR LK & O/S RRVIEW MIR MEMORY INTERFACE MDL WRG ....
00–02	Y SPECIAL TAIL & S/LP (T93)	12163315	RH	263.90	HARNESS, DR LK & O/S RRVIEW MIR MEMORY INTERFACE MDL WRG ....
01–02	Y ELEC R/CON HTD MIR (DL8)	12163314	LH	263.90	HARNESS, DR LK & O/S RRVIEW MIR MEMORY INTERFACE MDL WRG . ..
01–02	Y O/S ELEC R/CON MIR (DD0) . ..	12189556	LH	263.90	HARNESS, DR LK & O/S RRVIEW MIR MEMORY INTERFACE MDL WRG ....

cardiagn.com

01-02	Y EUROPEAN PROVISIONS (VD1) (EXPORT)	10441963	1		HARNESS, KEYLESS ENTRY WRG (ELEMENT)
97	Y07 6-WAY PWR P/SEAT ADJR (AG2), MAN RECL FRT BKT ST, DELUXE (AR9)	10410692	1	53.81	HARNESS, P/SEAT ADJR WRG
98-01	Y07-67 6-WAY PWR P/SEAT ADJR (AG2), MAN RECL FRT BKT ST, DELUXE (AR9)	10410692	1	53.81	HARNESS, P/SEAT ADJR WRG
99-00	Y	12020833	1	*.76	RETAINER, BODY WRG HARN CONN (GRAY) (PUSH-IN) (1" LONG) (02.559)
97-02	Y	21020632	6	3.33	RETAINER, DR WRG HARN
98	Y67	12130419	1	59.12	WIRE, CONV TOP
	*EXPORT**********EXPORT**********EXPORT**********EXPORT**********EXPORT*				
97-01	Y07 TAIL & S/LP (T89) (EXPORT), (EXC SPECIAL TAIL & S/LP (T93)	12130413	1	244.62	HARNESS, BODY RR WRG
97-99	Y07 SPECIAL TAIL & S/LP (T93), (EXC TAIL & S/LP (T89) (EXPORT)	12189585	1	526.79	HARNESS, BODY RR WRG
98	Y67 TAIL & S/LP (T89) (EXPORT), (EXC SPECIAL TAIL & S/LP (T93)	12189533	1	526.79	HARNESS, BODY RR WRG
98-99	Y67 SPECIAL TAIL & S/LP (T93), (EXC TAIL & S/LP (T89) (EXPORT)	12189534	1	526.79	HARNESS, BODY RR WRG
99	Y37 SPECIAL TAIL & S/LP (T93), (EXC TAIL & S/LP (T89) (EXPORT)	12189534	1	526.79	HARNESS, BODY RR WRG
99-02	Y37-67 TAIL & S/LP (T89) (EXPORT), (EXC SPECIAL TAIL & S/LP (T93)	12189533	1	526.79	HARNESS, BODY RR WRG
99-02	Y EUROPEAN PROVISIONS (VD1) (EXPORT)	12020833	1	*.76	RETAINER, BODY FRT WRG HARN CONN (GRAY) (PUSH-IN) (1" LONG) (02.559)

13.095 RELAY, Body Wiring

97-02	Y	12088567	1	16.45	RELAY, C/LP (GRAY) (4-WAY) (09.277) (AC-DELCO #15-8571)
98-00	Y67	12088567	1	16.45	RELAY, F/TOP (GRAY) (4-WAY) (09.277) (AC-DELCO #15-8571)

13.100 CONNECTOR, Body Wiring

97-02	Y	12085536	1	29.85	CONNECTOR, INLINE-TO BODY HARN (BLACK) (4-WAY M) (W/LEADS) (02.535) (AC-DELCO #PT144)
97	Y	12101[illegible]22	1	33.42	CONNECTOR, INLINE-TO BODY HARN (GRAY) (8-WAY F) (W/LEADS) (02.535) (AC-DELCO #PT214)
97	Y	12101876		27.54	CONNECTOR, INLINE-TO BODY HARN (6-WAY M) (W/LEADS) (02.535) (AC-DELCO #PT267)
97	Y	15305888	1	30.36	CONNECTOR, INLINE-TO BODY HARN (6-WAY F W/LEADS) (13.090) (AC-DELCO #PT1032)
01-02	Y EUROPEAN PROVISIONS (VD1) (EXPORT)	12047817	1	1.73	CONNECTOR, INLINE-TO BODY HARN (BLUE) (4-WAY M) (W/O LEADS) (09.656)
01-02	Y	12117271	1	59.43	CONNECTOR, INLINE-TO BODY HARN (WHITE) (8-WAY F W/LEADS) (02.535) (AC-DELCO #PT444)

cardiagn.com

02	YY67 4-SPD A/TRANS (M30), A/C FRT AUTO/AUX CONT (CJ2), T&T WHL (N37), (EXC TAIL & S/LP (T89) (EXPORT)	12085536	1	29.85	CONNECTOR, INLINE-TO BODY HARN (BLACK) (4-WAY M) (W/LEADS) (02.535) (AC-DELCO #PT144)
97-02	Y	12103188	1	1.89	CONNECTOR, INLINE-TO DR HARN (10-WAY MALE M/P 150 W/O LEADS. (BLUE) .) (BLUE) (10-WAY M, W/O LEADS) (02.530)
97-02	Y	15305872	1	33.15	CONNECTOR, INLINE-TO DR HARN (RR) (BLACK) (6-WAY M W/LEADS) (AC-DELCO #PT1013)
99	Y	12101827	1	37.50	CONNECTOR, INLINE-TO DR HARN (8-WAY M) (W/LEADS) (02.535) (AC-DELCO #PT219)
02	YY67 4-SPD A/TRANS (M30), A/C FRT AUTO/AUX CONT (CJ2), T&T WHL (N37), (EXC TAIL & S/LP (T89) (EXPORT)	12103188	1	1.89	CONNECTOR, INLINE-TO DR HARN (10-WAY MALE M/P 150 W/O LEADS. (BLUE)) (BLUE) (10-WAY M, W/O LEADS) (02.530)
02	YY67 4-SPD A/TRANS (M30), A/C FRT AUTO/AUX CONT (CJ2), T&T WHL (N37), (EXC TAIL & S/LP (T89) (EXPORT)	15305872	1	33.15	CONNECTOR, INLINE-TO DR HARN (RR) (BLACK) (6-WAY M W/LEADS) (AC-DELCO #PT1013)
97-02	Y	12101855	2	20.56	CONNECTOR, INLINE-TO DR LK ACTR MOT (2-WAY F) (W/LEADS) (W/SEAL) (02.535) (AC-DELCO #PT247)
97-02	Y	12085536	1	29.85	CONNECTOR, INLINE-TO O/S RR VIEW MIR (BLACK) (4-WAY M) (W/LEADS) (02.535) (AC-DELCO #PT144)
97-02	Y	12101827	2	37.50	CONNECTOR, INLINE-TO O/S RR VIEW MIR (8-WAY M) (W/LEADS) (02.535) (AC-DELCO #PT219)
97-02	Y	15305872	1	33.15	CONNECTOR, INLINE-TO PWR ST (RR) (BLACK) (6-WAY M W/LEADS) (AC-DELCO #PT1013)
02	YY67 4-SPD A/TRANS (M30), A/C FRT AUTO/AUX CONT (CJ2), T&T WHL (N37), (EXC TAIL & S/LP (T89) (EXPORT)	15305872	1	33.15	CONNECTOR, INLINE-TO PWR ST (RR) (BLACK) (6-WAY M W/LEADS) (AC-DELCO #PT1013)
97-02	Y	12101825	2	18.01	CONNECTOR, INLINE-TO R/CMPT LID LAT REL SOL (GRAY) (2-WAY F W/LEADS) (INDEX TAB CTR CAVITY A&B) (02.535) (AC-DELCO #PT217)
97-02	Y	12117271	1	59.43	CONNECTOR, INLINE-TO RR BODY HARN (WHITE) (8-WAY F W/LEADS) (02.535) (AC-DELCO #PT444)
97-02	Y	12085481	2	18.12	CONNECTOR, INLINE-TO S/S MIR LP (BLACK) (2-WAY M W/LEADS) (02.535) (AC-DELCO #PT103)
99	Y	12101822	1	33.42	CONNECTOR, INLINE-TO S/S MIR LP (GRAY) (8-WAY F) (W/LEADS) (02.535) (AC-DELCO #PT214)
99	Y07-67	12101827	1	37.50	CONNECTOR, INLINE-TO S/S MIR LP (8-WAY M) (W/LEADS) (02.535) (AC-DELCO #PT219)
01-02	Y	12101822	1	33.42	CONNECTOR, INLINE-TO S/S MIR LP (GRAY) (8-WAY F) (W/LEADS) (02.535) (AC-DELCO #PT214)

cardiagn.com

97	Y	12085481	2	18.12	CONNECTOR, INLINE–TO ST BELT SW (BLACK) (2–WAY M W/LEADS) (02.535) (AC–DELCO #PT103)
97–02	Y	12126487	1	38.52	CONNECTOR, SW–DR AJAR IND (4–WAY F) (W/LEADS) (02.383) (AC–DELCO #PT757)

cardiagn.com

ILLUSTRATION INDEX

	TITLE	GRID
1997–2002	Y TRANSAXLE MOUNTING TO DIFFERENTIAL CARRIER	3–E4
1997–1998	Y AUTOMATIC TRANSMISSION (M30) PART 2 (4L60E) CLUTCH GEARS	3–E6
1997–2002	Y AUTOMATIC TRANSMISSION (M30) PART 1 (4L60E) CASE & RELATED PARTS/PARK LOCK LINKAGE	3–E15
1997–2002	Y AUTOMATIC TRANSMISSION (M30) PART 3 (4L60E) CONTROL VALVE	3–E24
1997–2002	Y AUTOMATIC TRANSMISSION (M30) PART 4 (4L60E) OIL PUMP	3–F2
1999–2002	Y AUTOMATIC TRANSMISSION (M30) PART 2 (4L60E) CLUTCH GEARS	3–F7
1997–2000	Y FILLER TUBE & OIL COOLER PIPES	3–F17
2001–2002	Y FILLER TUBE & OIL COOLER PIPES	3–F19
1997–2002	Y SHIFT CONTROL/AUTOMATIC TRANSMISSION FLOOR(M30)	3–F21

cardiagn.com

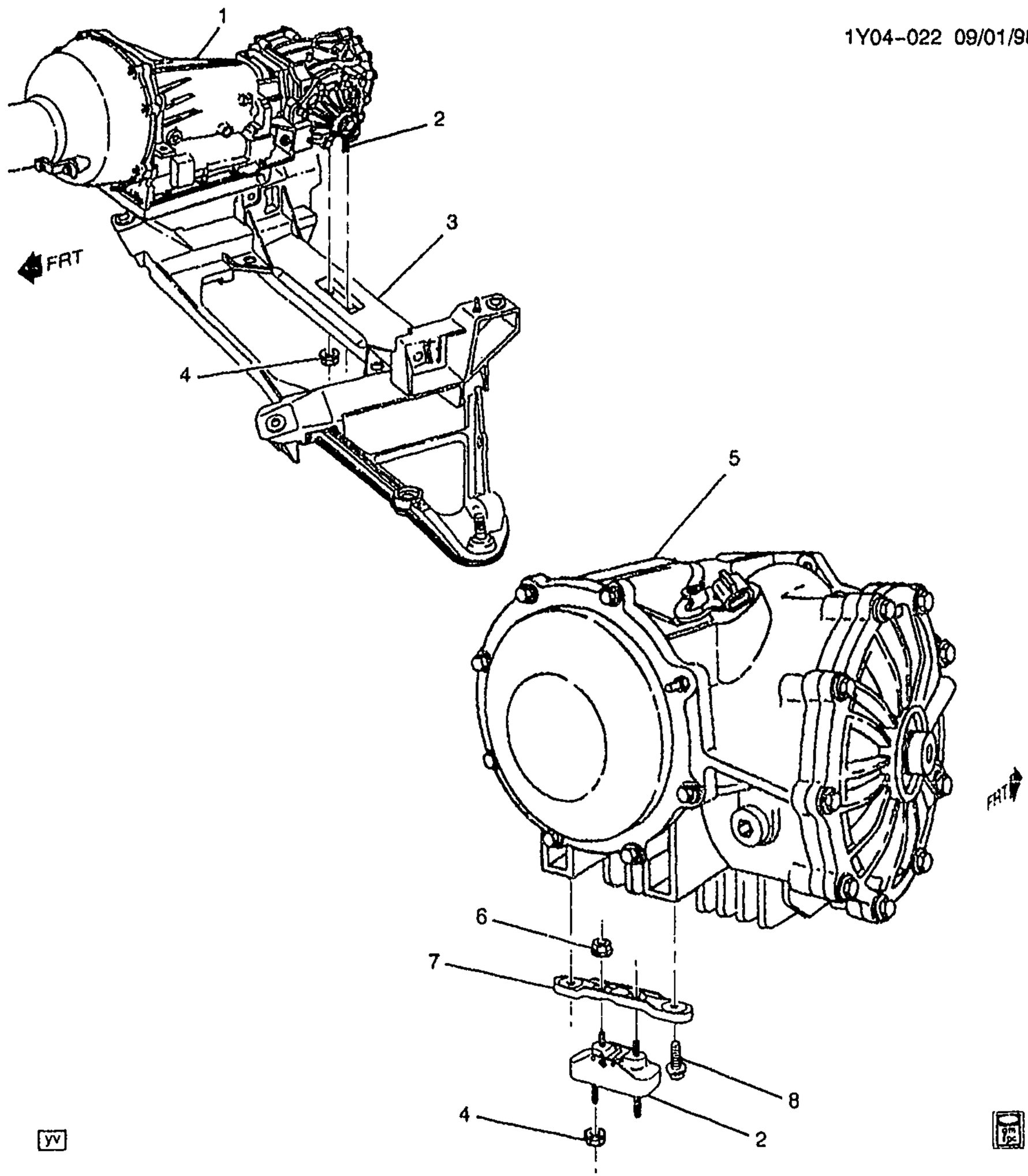

1Y04-022

1997-2002 Y TRANSAXLE MOUNTING TO DIFFERENTIAL CARRIER

1.	N.S.	TRANSAXLE, MAN (3.42 RATIO) (CPS) (SEE GRP 4 FOR DETAILED ILLUSTRATED VIEW) .	.....

cardiagn.com

		N.S.	TRANSAXLE, AUTO (2.73 RATIO) (CPS) (SEE GRP 4 FOR DETAILED ILLUSTRATED VIEW) .		.....		
		N.S.	TRANSAXLE, AUTO (3.15 RATIO) (CPS) (SEE GRP 4 FOR DETAILED ILLUSTRATED VIEW) .		.....		
2.	3-A9	4.081	MOUNT, TRANS	97-02	Y (MM6)	1	22178940
	3-A9	4.081	MOUNT, TRANS	97-02	Y (M30)	1	22178940
	3-A9	4.081	MOUNT, TRANS	01-02	Y (M12)	1	22178940
3.	3-N22	7.014	CROSSMEMBER, RR (CAST ALUM)	97	Y	1	10266823
	3-N22	7.014	CROSSMEMBER, RR (CAST ALUM)	98	Y (EXC JAG)	1	10266823
	3-N22	7.014	CROSSMEMBER, RR	98	Y (JAG)	1	10266824
	3-N22	7.014	CROSSMEMBER, RR	99-02	Y	1	10266824
4.	3-A9	4.085	NUT, TRANS MT (BOTTOM) (M10X1.5) (PREV TORQUE LRG FLANGED) (7.242)	97-02	Y (MM6)	2	10250686
	3-A9	4.085	NUT, TRANS MT (BOTTOM) (M10X1.5) (PREV TORQUE LRG FLANGED) (7.242)	97-02	Y (M30)	2	10250686
	3-A9	4.085	NUT, TRANS MT (BOTTOM) (M10X1.5) (PREV TORQUE LRG FLANGED) (7.242)	01-02	Y (M12)	2	10250686
5.	3-D11	5.505	CARRIER, DIFF (2.73 RATIO) (W/GEARS) (5.546)	97-02	Y (M30, GU2)	1	12554837
	3-D11	5.505	CARRIER, DIFF	01	YY37 (M12, GU6)	1	12561853
	3-D11	5.505	CARRIER, DIFF	02	YY37 (LS6, M12, GU6) .	1	12572683
	3-D11	5.505	CARRIER, DIFF (W/GEARS) (3.42 RATIO)	97-02	Y (MM6)	1	12551769
	3-D11	5.505	CARRIER, DIFF (3.15 RATIO)	97-02	Y (LS1, M30, G90)	1	12556313
6.		8.917	NUT-METRIC ALL METAL DIR'L PRVG TORG TENS (TRANS MT TRANS SI)	97-02	.....	2	11516077
7.	3-A9	4.083	BRACKET, TRANS MT	97-02	Y (MM6)	1	10283879
	3-A9	4.083	BRACKET, TRANS MT	97-02	Y (M30)	1	10283879
	3-A9	4.083	BRACKET, TRANS MT	01-02	Y (M12)	1	10283879
8.		8.900	BOLT, M10X1.5X30, 10.9, 7114M, 22 OD, HDR PT (TRANS MT)	97-02	.....	2	11516328

RPO DEFINITIONS
GU2 – AXLE,REAR,2.73 RATIO
GU6 – AXLE,REAR,3.42 RATIO
G90 – AXLE REAR 3.15 RATIO
JAG – BRAKE PROVISIONS ABS LOCATION
LS1 – ENGINE GAS, 8 CYL, 5.7L, SFI, ALUMINUM ENGINE
LS6 – ENGINE GAS, 8 CYL, 5.7L, SFI, ALUMINUM, HIGH OUTPUT
MM6 – TRANSMISSION MAN 6 SPD, BORG WARNER, 85MM, 1ST 2.66, 6TH 0.50, O/D
M12 – TRANSMISSION MAN 6 SPD, TREMEC, 85MM, 1ST 2.97, 6TH 0.57, O/D
M30 – TRANSMISSION,AUTOMATIC 4 SPEED,4L60E,ELECTRONIC

cardiagn.com

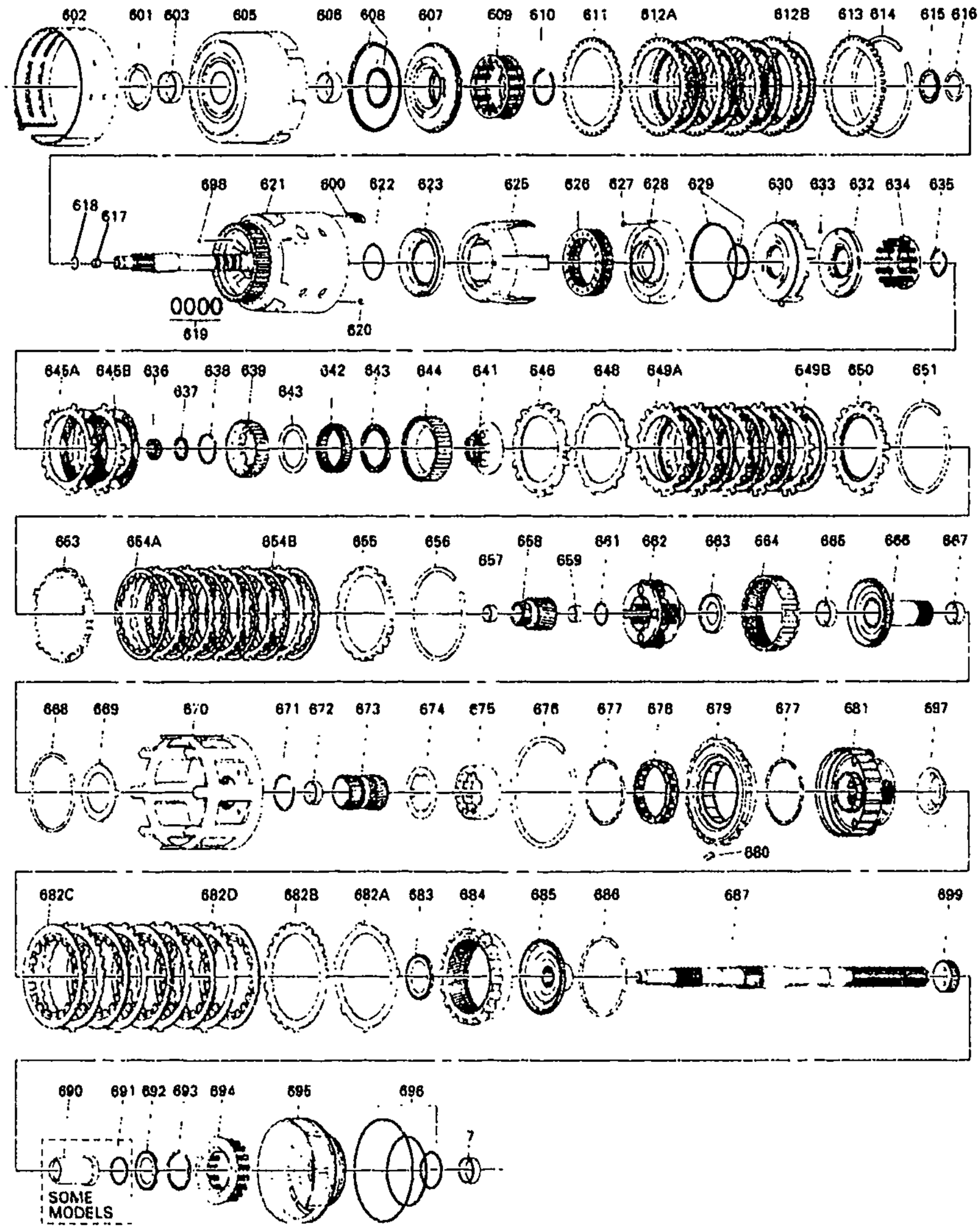

GM04-506Y

1997-1998 Y AUTOMATIC TRANSMISSION (M30) PART 2 (4L60E) CLUTCH GEARS

7.	3-D14	5.556	BUSHING, PROP SHF FRT SLIP YOKE (INSIDE DIA 1.506-1.509) (PART OF TRANS CASE) (4.104) (AC-DELCO #8680027)	97-98	Y (M30)	1	8680027

© 2001 GENERAL MOTORS SERVICE PARTS OPERATIONS-CHEVROLET-15Y

cardiagn.com

600.	3-A16	4.167	SPRING, 3-4 CLU (BOOST) (INCLS RET & (2) SPRNGS) (*KIT7) (4.163) (AC-DELCO #8667424)	97-98	Y (M30)	5	8667424
601.	3-A18	4.189	WASHER, REV INPUT CLU HSG THR (4.226) (AC-DELCO #08642041)	97-98	Y (M30)	1	8642041
	3-A18	4.189	WASHER, REV INPUT CLU HSG THR (TO STATOR SHF) (1.87-1.97MM) (4.158) (AC-DELCO #8642067)	97-98	Y (M30)	1	8642067
	3-A18	4.189	WASHER, REV INPUT CLU HSG THR (TO STATOR SHF) (2.04-2.14MM) (4.158) (AC-DELCO #8642068)	97-98	Y (M30)	1	8642068
	3-A18	4.189	WASHER, REV INPUT CLU HSG THR (TO STATOR SHF) (2.21-2.31MM) (4.158) (AC-DELCO #8642069)	97-98	Y (M30)	1	8642069
	3-A18	4.189	WASHER, REV INPUT CLU HSG THR (TO STATOR SHF) (2.38-2.48MM) (4.158) (AC-DELCO #8642070)	97-98	Y (M30)	1	8642070
	3-A18	4.189	WASHER, REV INPUT CLU HSG THR (TO STATOR SHF) (2.55-2.65MM) (4.158) (AC-DELCO #8642071)	97-98	Y (M30)	1	8642071
	3-A18	4.189	WASHER, REV INPUT CLU HSG THR (TO STATOR SHF) (2.72-2.82MM) (4.158) (AC-DELCO #8642072)	97-98	Y (M30)	1	8642072
	3-A18	4.189	WASHER, REV INPUT CLU HSG THR (TO STATOR SHF) (2.89-2.99MM) (4.158) (AC-DELCO #8642073)	97-98	Y (M30)	1	8642073
	3-A18	4.189	WASHER, REV INPUT CLU HSG THR (TO STATOR SHF) (3.06-3.16MM) (4.158) (AC-DELCO #8642074)	97-98	Y (M30)	1	8642074
602.	3-A24	4.251	BAND, 2-4 (AC-DELCO #24201131)	97-98	Y (M30)	1	24201131
603.	3-A17	4.180	BUSHING, REV INPUT CLU HSG FRT (ALSO PART OF 605) (AC-DELCO #8642905)	97-98	Y (M30)	1	8642905
605.	3-A16	4.169	HOUSING, REV INPUT CLU (INCL 603, 606) (AC-DELCO #8681295)	97-98	Y (M30)	1	8681295
606.	3-A16	4.169	BUSHING, DIR CLU HSG RR (ALSO PART OF 605) (AC-DELCO #8628917)	97-98	Y (M30)	1	8628917
607.	3-A15	4.166	PISTON, REV INPUT CLU (.095 HOLE) (AC-DELCO #8667841) .	97-98	Y (M30)	1	8667841
608.	3-A15	4.166	SEAL KIT, REV INPUT CLU (INCLS SEALS) (*KIT2, KIT3) (AC-DELCO #8657922)	97-98	Y (M30)	1	8657922
609.	3-A15	4.164	SPRING, REV INPUT CLU (AC-DELCO #8647284)	97-98	Y (M30)	1	8647284

cardiagn.com

610.	3-A15	4.164	RING, REV INPUT CLU SPR RET (*KIT4) (AC-DELCO #8628059) .	97-98	Y (M30)	1	8628059
611.	3-A12	4.163	PLATE, REV INPUT CLU (WAVED) (AC-DELCO #8663074)	97-98	Y (M30)	1	8663074
612.	3-A12	4.163	PLATE, REV INPUT CLU (ILLUSTRATED AS 612A) (153MM DIA) (*KIT8) (AC-DELCO #8673605)	97-98	Y (M30)	4	8673605
	3-A12	4.163	PLATE, REV INPUT CLU (ILLUSTRATED AS 612B) (W/ HOLES IN TURB PLATES) (AC-DELCO #24205267)	97-98	Y (M30)	4	24205267
613.	3-A12	4.163	PLATE, REV INPUT CLU BKG (7.25-7.41MM) (AC-DELCO #8682863)	97-98	Y (M30)	1	8682863
	3-A12	4.163	PLATE, REV INPUT CLU BKG (6.52-6.68MM) (AC-DELCO #8682864)	97-98	Y (M30)	1	8682864
	3-A12	4.163	PLATE, REV INPUT CLU BKG (5.79-5.95MM) (AC-DELCO #8682865)	97-98	Y (M30)	1	8682865
614.	3-A15	4.164	RING, REV INPUT CLU BKG PLT RET (YELLOW) (AC-DELCO #8667022)	97-98	Y (M30)	1	8667022
615.	3-A12	4.162	BEARING, REV INPUT CLU HSG THR (STATOR SHFT) (TO SEL WASHER) (AC--DELCO #8642066)	97-98	Y (M30)	1	8642066
616.	3-A18	4.189	WASHER, REV INPUT CLU HSG THR (4.226) (AC-DELCO #08642041)	97-98	Y (M30)	1	8642041
	3-A18	4.189	WASHER, REV INPUT CLU HSG THR (TO STATOR SHF) (1.87-1.97MM) (4.158) (AC-DELCO #8642067)	97-98	Y (M30)	1	8642067
	3-A18	4.189	WASHER, REV INPUT CLU HSG THR (TO STATOR SHF) (2.04-2.14MM) (4.158) (AC-DELCO #8642068)	97-98	Y (M30)	1	8642068
	3-A18	4.189	WASHER, REV INPUT CLU HSG THR (TO STATOR SHF) (2.21-2.31MM) (4.158) (AC-DELCO #8642069)	97-98	Y (M30)	1	8642069
	3-A18	4.189	WASHER, REV INPUT CLU HSG THR (TO STATOR SHF) (2.38-2.48MM) (4.158) (AC-DELCO #8642070)	97-98	Y (M30)	1	8642070
	3-A18	4.189	WASHER, REV INPUT CLU HSG THR (TO STATOR SHF) (2.55-2.65MM) (4.158) (AC-DELCO #8642071)	97-98	Y (M30)	1	8642071
	3-A18	4.189	WASHER, REV INPUT CLU HSG THR (TO STATOR SHF) (2.72-2.82MM) (4.158) (AC-DELCO #8642072)	97-98	Y (M30)	1	8642072

cardiagn.com

	3-A18	4.189	WASHER, REV INPUT CLU HSG THR (TO STATOR SHF) (2.89-2.99MM) (4.158) (AC-DELCO #8642073)	97-98	Y (M30)	1	8642073
	3-A18	4.189	WASHER, REV INPUT CLU HSG THR (TO STATOR SHF) (3.06-3.16MM) (4.158) (AC-DELCO #8642074)	97-98	Y (M30)	1	8642074
617.	3-A10	4.123	VALVE, TURB SHF BALL CHK (PART OF 621) (AC-DELCO #8685839)	97-98	Y (M30)	1	8685839
618.	3-A10	4.123	SEAL, TURB SHF (O RING) (*KIT2, KIT3) (AC-DELCO #8630049)	97-98	Y (M30)	1	8630049
619.	3-A10	4.123	RING, INPUT SHF FLUID SEAL (TEFLON) (TEFLON) (*KIT2, KIT3) (AC-DELCO #8667035)	97-98	Y (M30)	4	8667035
620.	3-A10	4.123	VALVE, 3-4 CLU HSG BALL CHK (ALSO PART OF 621) (AC-DELCO #24208262)	97-98	Y (M30)	1	24208262
621.	3-A12	4.158	HOUSING, 3-4 CLU (W/INPUT SHF) (INCL 617, 620) (AC-DELCO #24200901)	97-98	Y (M30)	1	24200901
622.		N.S.	SEAL, O-RING INPUT TO FWD HSG (*KIT1, KIT2, KIT3)		.....		
623.	3-A15	4.166	PISTON, 3-4 CLU (AC-DELCO #24200290)	97-98	Y (M30)	1	24200290
625.	3-A16	4.167	RING, 3-4 CLU APPL (1 BAR) (*KIT7) (AC-DELCO #8685043) .	97-98	Y (M30)	1	8685043
626.	3-A16	4.167	SPRING, 3-4 CLU (105.12MM O.D.) (AC-DELCO #8685244) ...	97-98	Y (M30)	1	8685244
627.	3-A10	4.123	VALVE, FWD CLU HSG BALL CHK (ALSO PART OF 628) (SINGLE ORIFICE) (BALL & NARROW) (4.226) (AC-DELCO #8628732)	97-98	Y (M30)	2	8628732
	3-A10	4.123	VALVE, FWD CLU HSG BALL CHK (ALSO PART OF 628) (SHORT & WIDE) (AC-DELCO #24205181)	97-98	Y (M30)	1	24205181
628.	3-A16	4.169	HOUSING, FWD CLU (INCL 627) (INCLS HOUSINGS & VALVE) (AC-DELCO #24205298)	97-98	Y (M30)	1	24205298
629.	3-A15	4.166	SEAL, FWD CLU PSTN OTR (*KIT1, KIT2, KIT3) (AC-DELCO #8686146)	97-98	Y (M30)	1	8686146
		N.S.	SEAL, FWD CLU INR (*KIT1, KIT2, KIT3)		.....		
630.	3-A15	4.166	PISTON, FWD CLU (*KIT11) (AC-DELCO #24205272)	97-98	Y (M30)	1	24205272
632.	3-A15	4.166	PISTON, OVERRUN CLU (INCL 633) (STEEL W/ INTEGRAL SEAL) (*KIT11) (AC-DELCO #24205273)	97-98	Y (M30)	1	24205273
633.		8.899	BALL, SPECIAL, 3/16 STEEL (ALSO PART OF 632) (AC-DELCO #7002117)	97-98	.....	AR	7002117

cardiagn.com

634.	3-A12	4.163	SPRING, OVERRUN CLU (*KIT11) (AC-DELCO #24206085)	97-98	Y (M30)	1	24206085
635.		8.934	RING, EXT SNAP FITS M38 DIA SHT .PL (*KIT4)	97-98		AR	11500692
636.	3-A17	4.176	SEAL, OUTPUT SHF (*KIT1, KIT2, KIT3) (AC-DELCO #24207010)	97-98	Y (M30)	1	24207010
637.	3-A12	4.159	BEARING, INPUT SUN GR THR (AC-DELCO #8642162)	97-98	Y (M30)	1	8642162
638.	3-A17	4.180	RING, OVERRUN CLU HUB RET (SNAP) (*KIT4, KIT11) (AC-DELCO #8647083)	97-98	Y (M30)	1	8647083
639.		N.S.	HUB, OVERRUN CLU (*KIT11)				
641.		N.S.	RETAINER, FWD CLU SPRAG INR (*KIT11)				
642.		N.S.	CLUTCH, FWD RLR (*KIT11)				
643.		N.S.	RETAINER, (*KIT11)				
644.		N.S.	RACE, FWD CLU SPRAG OTR (*KIT11)				
645.	3-A12	4.163	PLATE, OVERRUN CLU (ILLUSTRATED AS 645A) (1.93-2.13 THK) (GROOVED) (AC-DELCO #8673253)		Y (M30)	AR	8673253
	3-A12	4.163	PLATE, OVERRUN CLU (ILLUSTRATED AS 645A) (1.93-2.13 THK) (GROOVED) (*KIT8) (AC-DELCO #24210766)	98	Y (M30)	AR	24210766
	3-A12	4.163	PLATE, OVERRUN CLU (ILLUSTRATED AS 645B) (2.34MM THK) (FLAT STEEL) (AC-DELCO #8642154)	97-98	Y (M30)	2	8642154
646.	3-A12	4.163	PLATE, FWD CLU APPLY (AC-DELCO #8682866)	97-98	Y (M30)	1	8682866
648.	3-A12	4.163	PLATE, FWD CLU (WAVED) (AC-DELCO #8647058)	97-98	Y (M30)	1	8647058
649.	3-A12	4.163	PLATE, FWD CLU (ILLUSTRATED AS 649A) (FIBER) (*KIT3, KIT5, KIT8) (AC-DELCO #8673254)	97-98	Y (M30)	5	8673254
	3-A12	4.163	PLATE, FWD CLU (ILLUSTRATED AS 649B) (STEEL) (*KIT3, KIT5, KIT8) (AC-DELCO #8654325)	97-98	Y (M30)	5	8654325
650.	3-A12	4.163	PLATE, FWD CLU BKG (6.92-7.07MM) (ID A) (AC-DELCO #8682867)	97-98	Y (M30)	1	8682867
	3-A12	4.163	PLATE, FWD CLU BKG (8.73-9.03MM) (ID B) (AC-DELCO #8682868)	97-98	Y (M30)	1	8682868
	3-A12	4.163	PLATE, FWD CLU BKG (4.56-4.71MM) (ID E) (AC-DELCO #8682871)	97-98	Y (M30)	1	8682871
	3-A12	4.163	PLATE, FWD CLU BKG (7.55MM-7.85MM) (AC-DELCO #24212467)	97-98	Y (M30)	1	24212467
	3-A12	4.163	PLATE, FWD CLU BKG (8.14MM-8.44MM) (AC-DELCO #24212468)	97-98	Y (M30)	1	24212468

cardiagn.com

651.	3-A12	4.163	RING, FWD CLU BKG PLT RET (AC-DELCO #8642170)	97-98	Y (M30)	1	8642170
653.	3-A12	4.163	PLATE, 3-4 CLU APPLY (*KIT7) (AC-DELCO #8685044)	97-98	Y (M30)	1	8685044
654.	3-A12	4.163	PLATE KIT, CLU (3-4 CLUTCH STEEL & FIBER) (*KIT3, KIT7, KIT8) (AC-DELCO #24209563) .	97-98	Y (M30)	1	24209563
655.	3-A12	4.163	PLATE, 3-4 CLU BKG (ID BY 3 DIMPLES) (*KIT7) (AC-DELCO #8685046)	97-98	Y (M30)	1	8685046
	3-A12	4.163	PLATE, 3-4 CLU BKG (4.79-4.99MM THK) (*KIT7) (AC-DELCO #24211896)	97-98	Y (M30)	1	24211896
	3-A12	4.163	PLATE, 3-4 CLU BKG (3.90MM-4.10MM) (*KIT7) (AC-DELCO #24212459)	97-98	Y (M30)	1	24212459
656.	3-A12	4.163	RING, 3-4 CLU BKG PLT RET (AC-DELCO #8663636)	97-98	Y (M30)	1	8663636
657.	3-A28	4.319	BUSHING, OUTPUT SHF (FRT) (ALSO PART OF 658) (FRT & RR) (*KIT11) (4.159) (AC-DELCO #8642181)	97-98	Y (M30)	1	8642181
658.	3-A12	4.159	GEAR, INPUT SUN (INCL 657, 659) (*KIT11) (AC-DELCO #24213007)	97-98	Y (M30)	1	24213007
659.	3-A28	4.319	BUSHING, OUTPUT SHF (REAR) (ALSO PART OF 658) (FRT & RR) (*KIT11) (4.159) (AC-DELCO #8642181)	97-98	Y (M30)	1	8642181
661.	3-A17	4.176	RING, OUTPUT SHF RET (TO INPUT CARR) (*KIT2, KIT3, KIT4) (AC-DELCO #8654141)	97-98	Y (M30)	1	8654141
662.	3-A16	4.175	CARRIER, INPUT (COMPL) (AC-DELCO #24212177)	97-98	Y (M30)	1	24212177
663.	3-A12	4.159	BEARING, INT REACTION GR SUPT THR (AC-DELCO #24217327)	97-98	Y (M30)	1	24217327
664.	3-A12	4.158	GEAR, INPUT INTL (AC-DELCO #8663639)	97-98	Y (M30)	1	8663639
665.	3-A17	4.176	BUSHING, REACTION CARR SHF FRT (ALSO PART OF 666) (AC-DELCO #8642908)	97-98	Y (M30)	1	8642908
666.	3-A16	4.175	SHAFT, REACTION CARR (INCL 665, 667) (AC-DELCO #8681518)	97-98	Y (M30)	1	8681518
667.	3-A17	4.176	BUSHING, REACTION CARR SHF RR (ALSO PART OF 666) (AC-DELCO #8642907)	97-98	Y (M30)	1	8642907
668.	3-A17	4.176	RING, REACTION CARR SHF RET (TO INT GR) (AC-DELCO #8642201)	97-98	Y (M30)	1	8642201
669.	3-A17	4.176	WASHER, REACTION CARR SHF THR (08642202 TO BE USED ONLY WITH 08683439) (AC-DELCO #8642202)	97-98	Y (M30)	1	8642202
670.	3-A16	4.175	SHELL, REACTION SUN GR (AC-DELCO #8683439)	97-98	Y (M30)	1	8683439

cardiagn.com

671.	3-A12	4.159	RING, REACTION SUN GR RET (AC-DELCO #8681553)	97-98	Y (M30)	1	8681553
672.	3-A17	4.176	BUSHING, REACTION SUN GR (ALSO PART OF 673) (AC-DELCO #8642909)	97-98	Y (M30)	1	8642909
673.	3-A12	4.159	GEAR, REACTION SUN (INCL 672, (INCLS BUSH & GEAR) (INDIVIDUAL COMPONENTS NOT SOLD SEPARATELY) (AC-DELCO #8642204)	97-98	Y (M30)	1	8642204
674.	3-A12	4.159	WASHER, REACTION SUN GR SHELL THR (4.176) (AC-DELCO #8642331)	97-98	Y (M30)	1	8642331
675.	3-A17	4.180	RACE, LOW CLU RLR INR (OVERRUN CLU) (PART OF 679) (AC-DELCO #8673300)	97-98	Y (M30)	1	8673300
676.	3-A17	4.180	RING, LOW & REV CLU SUPT RET (AC-DELCO #24200278) ..	97-98	Y (M30)	1	24200278
677.	3-A17	4.180	RING, LOW CLU RLR RET (O/RUN) (PART OF 679) (AC-DELCO #6261051)	97-98	Y (M30)	2	6261051
678.	3-A17	4.180	ROLLER, LOW CLU (PART OF 679) (*KIT6) (AC-DELCO #7471008)	97-98	Y (M30)	1	7471008
679.	3-A15	4.166	SUPPORT, LOW & REV CLU (INCL 675, 677, 678) (*KIT6) (4.180) (AC-DELCO #8681727) .	97-98	Y (M30)	1	8681727
680.	3-A17	4.180	SPRING, LOW & REV CLU SUPT (RET) (AC-DELCO #6261415) ..	97-98	Y (M30)	1	6261415
681.	3-A16	4.175	CARRIER, REACTION (W/DEFLECTOR) (HI-SPEED) (INCL 697) (AC-DELCO #8654200)	97-98	Y (M30)	1	8654200
682.	3-A12	4.163	PLATE, LOW & REV CLU (WAVED) (ILLUSTRATED AS 682A) (*KIT3, KIT6) (AC-DELCO #8676362)	97-98	Y (M30)	1	8676362
	3-A12	4.163	PLATE, LOW & REV CLU (ID BLANK) (ILLUSTRATED AS 682B) (1.829MM) (HAS HOLES IN TURB PLATES) (STEEL) (*KIT3, KIT6) (AC-DELCO #24205268)	97-98	Y (M30)	4	24205268
	3-A12	4.163	PLATE, LOW & REV CLU (ID 4, 8, 0) (ILLUSTRATED AS 682B) (1.314MM) (SELECTIVE) (*KIT3, KIT6) (AC-DELCO #8680440) ...	97-98	Y (M30)	1	8680440
	3-A12	4.163	PLATE, LOW & REV CLU (ID 4, 8, 0) (ILLUSTRATED AS 682B) (2.344MM) (HAS HOLES IN TURB PLATES) (*KIT3, KIT6) (AC-DELCO #24205270)	97-98	Y (M30)	1	24205270
	3-A12	4.163	PLATE, LOW & REV CLU (FLAT FACED) (ILLUSTRATED AS 682C) (NON-SEGMENTED COMPLETE SET OF 5) (*KIT3, KIT6, KIT8) (AC-DELCO #8684089)	97-98	Y (M30)	5	8684089

cardiagn.com

	3-A12	4.163	PLATE, LOW & REV CLU (ILLUSTRATED AS 682D) (1.829MM) (HAS HOLES IN TURB PLATES) (STEEL) (*KIT3, KIT6) (AC-DELCO #24205268)	97-98	Y (M30)	1	24205268
683.	3-A12	4.159	BEARING, REACTION CARR THR (4.176) (AC-DELCO #8642215)	97-98	Y (M30)	1	8642215
	3-A12	4.159	BEARING, DIFF CARR SUN GR THR (AC-DELCO #8646254) ...	97-98	Y (M30)	1	8646254
684.	3-A12	4.158	GEAR, REACTION INTL (AC-DELCO #8667055)	97-98	Y (M30)	1	8667055
685.	3-A16	4.175	SUPPORT, REACTION INTL GR (AC-DELCO #8681491)	97-98	Y (M30)	1	8681491
686.	3-A17	4.176	RING, INT REACTION GR SUPT RET (AC-DELCO #8642220) ...	97-98	Y (M30)	1	8642220
687.	3-A16	4.175	SHAFT, OUTPUT (AC-DELCO #24207079)	97-98	Y (M30)	1	24207079
690.		N.S.	SLEEVE, OUTPUT SHF (NOT REQD)		.....		
691.		N.S.	SEAL, OUTPUT SHF		.....		
692.	3-A12	4.159	BEARING, REACTION CARR THR (AC-DELCO #24217327) ..	97-98	Y (M30)	1	24217327
693.	3-A15	4.164	RING, LOW & REV CLU SPR RET RET (*KIT4, KIT6) (4.159) (AC-DELCO #8647337)	97-98	Y (M30)	1	8647337
694.	3-A15	4.164	SPRING, LOW & REV CLU (AC-DELCO #8642227)	97-98	Y (M30)	1	8642227
695.	3-A15	4.166	PISTON, LOW & REV CLU (*KIT6) (AC-DELCO #8685549) .	97-98	Y (M30)	1	8685549
696.	3-A18	4.189	SEAL KIT, LOW & REV CLU (INCLS INR, OTR & INTER SEALS) (*KIT2, KIT3, KIT6) (4.166) (AC-DELCO #8648987) .	97-98	Y (M30)	1	8648987
697.		N.S.	DEFLECTOR, OIL (PART OF 681)		.....		
698.	3-A20	4.224	ORIFICE, LUB FLUID (4.3MM DIA) (AC-DELCO #8663707) ...	97-98	Y (M30)	2	8663707
699.		N.S.	WHEEL, VEH SPD SEN RELUCTOR (PART OF FINAL DRIVE ASSY)		.....		

SERVICE KITS

1.	3-A15	4.166	SEAL KIT, 3-4 CLU PSTN (FOA) (INCL 622, 624, 629, 631, 636) (AC-DELCO #8642919)	97-98	Y (M30)	1	8642919
2.	3-A7	4.005	GASKET KIT, A/TRNS SERV (INCL 608, 618-19, 622, 624, 629, 631, 636, 661, 691, 696) (W/O PLATES OR PISTONS) (AC-DELCO #24201803)	97-98	Y (M30)	1	24201803
3.		N.S.	TRANSMISSION KIT, AUTO (SERV OVERHAUL W/PLT, GSKT, SEAL) (USE 24201803 GASKET KIT T/W 24209562 PLATE KIT T/W 24204496 PISTON KIT.)		....		
4.	3-A7	4.005	RING KIT, RET (INCL 610, 635, 638, 661, 693) (AC-DELCO #8642910)	97-98	Y (M30)	1	8642910

cardiagn.com

5.	3-A12	4.163	PLATE KIT, FWD CLU (INCL 649, 702) (INCLS INST SHEET & PLATES) (AC-DELCO #8647991)	97-98	Y (M30)	AR	8647991
6.	3-A12	4.163	PLATE KIT, LOW & REV CLU (W/SUPT) (W/PSTN) (INCL 675, 677-9, 682, 693, 695-6) (STEEL PLATES) (AC-DELCO #8687996)	97-98	Y (M30)	1	8687996
7.	3-A12	4.163	PLATE KIT, 3-4 CLU (INCL 600, 625, 653, 654, 655B) (AC-DELCO #24209032)	97-98	Y (M30)	1	24209032
8.	3-A12	4.163	PLATE KIT, CLU (INCL 612A, 645A, 649, 654A, 682C) (HAS FIBER PLTS) (AC-DELCO #24209031)	97-98	Y (M30)	1	24209031
10.	3-A15	4.166	PISTON KIT, FWD CLU & OVERRUN CLU (INCL 630, 632, 634) (AC-DELCO #24209542) ..	97-98	Y (M30)	1	24209542
11.	3-A15	4.164	CLUTCH, FWD RLR (INCL 638, 639, 641-2, 644, 657, 658) (REG SPD, INCLS INPUT SUN GEAR) (*1) (AC-DELCO #24210961) ...	97-98	Y (M30)	1	24210961
	3-A15	4.164	CLUTCH, FWD RLR (INCL 638, 639, 641-2, 644, 657, 658) (REG SPD, INCLS INPUT SUN GEAR) (*1) (AC-DELCO #24210961) ...	97-98	Y (M30)	1	24210961

NOTE 1: IF STOCK OF KIT 11 IS NOT AVAILABLE IT WILL BE NECESSAY TO USE C/O 658 INPUT SUN GEAR 8647093 T/W C/0 642 CLUTCH KIT 8657929-HI SPEED OR 8657929-REG SPEED FOR UP TO 1998.

RPO DEFINITIONS

M30 - TRANSMISSION,AUTOMATIC 4 SPEED,4L60E,ELECTRONIC

cardiagn.com

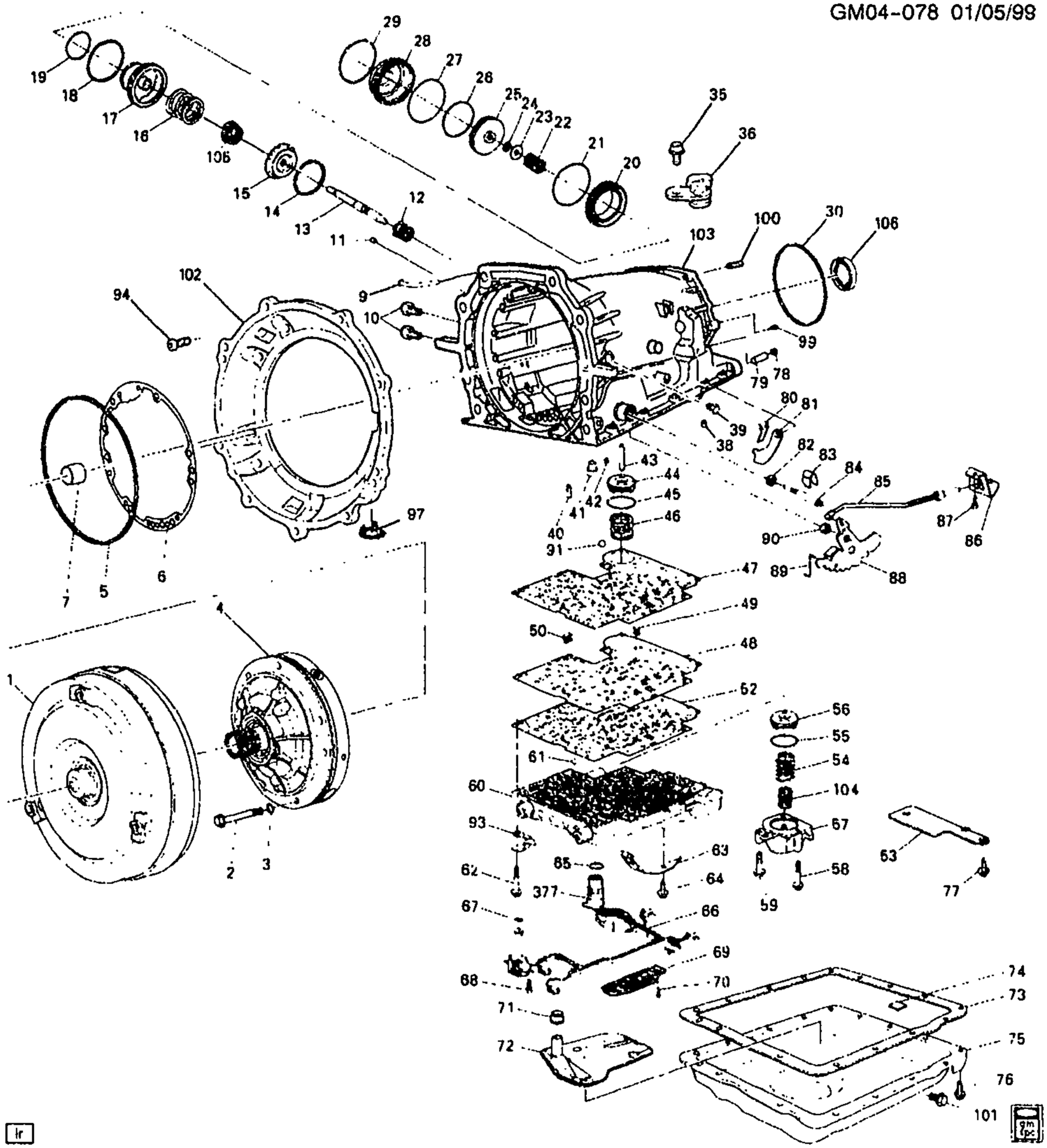

GM04-078Y

1997-2002 Y AUTOMATIC TRANSMISSION (M30) PART 1 (4L60E) CASE & RELATED PARTS/PARK LOCK LINKAGE

1.	3-A10	4.115	CONVERTER, TORQ (REMAN) (DHPG)	97-02 Y (M30)	1	24208649
2.	3-A21	4.226	BOLT, A/TRNS FLUID PUMP (M8X1.25X60) (INCLS SEAL) (*KIT1, KIT2) (AC-DELCO #24210819)	97-02 Y (M30)	7	24210819

cardiagn.com

3.	3-A21	4.226	SEAL, A/TRNS FLUID PUMP BOLT (PUMP TO CASE BOLT) (AC-DELCO #12337996)	97-02	Y (M30)	7	12337996
4.		N.S.	PUMP, A/TRNS OIL (SEE PUMP ILLUSTRATION)		.....		
5.	3-A21	4.226	SEAL, A/TRNS FLUID PUMP (*KIT1, KIT2) (AC-DELCO #24210605)	97-02	Y (M30)	1	24210605
6.	3-A21	4.226	GASKET, A/TRNS FLUID PUMP (*KIT1, KIT2) (AC-DELCO #12337931)	97-02	Y (M30)	1	12337931
7.	3-D14	5.556	BUSHING, PROP SHF FRT SLIP YOKE (ALSO PART OF 8) (INSIDE DIA 1.506-1.509) (PART OF TRANS CASE) (4.104) (AC-DELCO #8680027)	97-02	Y (M30)	1	8680027
9.	3-A9	4.104	PIPE, A/TRNS VENT (*KIT10)	97-02	Y (M30)	1	24202440
10.	3-A11	4.128	FITTING, TRANS FLUID CLR PIPE (1/4 NPS TO 3/8 FLARE) (INLET TO CASE) (*KIT10) (AC-DELCO #8651654)	97-02	Y (M30)	1	8651654
	3-A11	4.128	FITTING, TRANS FLUID CLR PIPE (1/4 NPS TO 3/8 FLARE) (INLET TO CASE) (*KIT10) (AC-DELCO #8651654)	02	Y (LS1, M30)	1	8651654
11.	3-A9	4.105	ORIFICE, FWD CLU FEED (6.4MM DIA) (NO DIMPLE) (*KIT10) (4.104) (AC-DELCO #8628864)	97-02	Y (M30)	1	8628864
12.	3-A23	4.233	SPRING, 2-4 BAND SERVO RTN (ORANGE) (AC-DELCO #8642273)	97-02	Y (M30)	1	8642273
13.	3-A24	4.246	PIN, 2-4 BAND SERVO PSTN (I.D BY 1 GROOVE IN TAPPERED POINT) (4.228) (AC-DELCO #8680499)	97-02	Y (M30)	1	8680499
	3-A24	4.246	PIN, 2-4 BAND SERVO PSTN (I.D BY 2 GROOVES IN TAPERED POINT) (4.228) (AC-DELCO #8680500)	97-02	Y (M30)	1	8680500
	3-A24	4.246	PIN, 2-4 BAND SERVO PSTN (I.D BY NO GROOVES IN TAPPERED POINT) (4.228) (AC-DELCO #8680501)	97-02	Y (M30)	1	8680501
14.	3-A17	4.176	RING, 2-4 BAND SERVO 2ND APPL PSTN RET (AC-DELCO #8642105)	97-02	Y (M30)	1	8642105
15.	3-A23	4.233	RETAINER, 2-4 BAND SERVO CUSH SPR (AC-DELCO #8642416)	97-02	Y (M30)	1	8642416
16.	3-A23	4.233	SPRING, 2-4 BAND SERVO PSTN CUSH (PINK) (AC-DELCO #8642539)	97-02	Y (M30)	1	8642539
17.		N.S.	PISTON, 2-4 BAND SERVO 2ND APPLY (*KIT8)		.....		
18.		N.S.	RING, LOW & REV ACCUM PSTN OTR FLUID SEAL (*KIT1, KIT2, KIT5, KIT8)		.....		

cardiagn.com

19.		N.S.	RING, LOW & REV ACCUM PSTN INR FLUID SEAL (*KIT1, KIT2, KIT5, KIT8)				
20.	3-A22	4.228	HOUSING, 2-4 BAND SERVO 2ND APPL (SERVO PISTON) (INNER) (AC-DELCO #8673039)	97-02	Y (M30)	1	8673039
21.	3-A23	4.229	SEAL, 2-4 BAND SERVO 2ND APPL PSTN HSG (O RING) (*KIT1, KIT2) (AC-DELCO #8642112)	97-99	Y (M30)	1	8642112
	3-A23	4.229	SEAL, 2-4 BAND SERVO 2ND APPL PSTN HSG (O RING) (*KIT1, KIT2) (AC-DELCO #24208661)	00-02	Y (M30)	1	24208661
22.	3-A24	4.246	SPRING, 2-4 BAND SERVO PSTN (AC-DELCO #24207758)	97-02	Y (M30)	1	24207758
23.	3-A23	4.233	WASHER, 2-4 BAND SERVO PIN (3/8) (AC-DELCO #8642107)	97-02	Y (M30)	1	8642107
24.		8.934	RETAINER, SNAP RING BOWED EXT .FITS SHFT 7/16 PL (OUTPUT SHF) (AC-DELCO #9415640)	97-02		AR	9415640
25.	3-A22	4.228	PISTON, 2-4 BAND SERVO 4TH APPLY (W/RING) (AC-DELCO #8642478)	97-02	Y (M30)	1	8642478
26.	3-A23	4.229	RING, 2-4 BAND SERVO PSTN FLUID SEAL (*KIT1, KIT2) (AC-DELCO #8642480)	97-02	Y (M30)	1	8642480
27.	3-A23	4.229	SEAL, 2-4 BAND SERVO CVR (O RING) (ALSO PART OF 28) (*KIT1, KIT2) (AC-DELCO #8647351)	97-02	Y (M30)	1	8647351
28.	3-A22	4.228	COVER, 2-4 SERVO (W/SEAL) (INCL 27) (INCLS RING) (4.241) (AC-DELCO #8642979)	97-02	Y (M30)	1	8642979
29.	3-A22	4.228	RING, 2-4 BAND SERVO CVR RET (AC-DELCO #8642124)	97-02	Y (M30)	1	8642124
30.	3-A28	4.318	SEAL, A/TRNS CASE EXTN (*KIT1, KIT2) (AC-DELCO #1358899)	97	Y (M30)	1	1358899
	3-A28	4.318	SEAL, A/TRNS CASE EXTN (*KIT1, KIT2) (AC-DELCO #24208660)	98-02	Y (M30)	1	24208660
35.	3-A28	4.329	BOLT, VEH SPD SEN (AC-DELCO #12369459)	97-01	Y	1	12369459
	3-A28	4.329	BOLT, VEH SPD SEN (AC-DELCO #12369459)	02	Y (LS1, M30, MM6, GU2, GU6, G90)	1	12369459
36.	3-A28	4.329	SENSOR VEH SPD (INCL 37) (AC-DELCO #213-344)	97-01	Y	1	12369458
	3-A28	4.329	SENSOR, VEH SPD (INCL 37) (AC-DELCO #213-344)	02	Y (LS1, M30, MM6, GU2, GU6, G90)	1	12369458
38.	3-A9	4.105	ORIFICE, 3RD ACCUM BL (6.4MM DIA) (NO DIMPLE) (*KIT10) (4.104) (AC-DELCO #8628864)	97-02	Y (M30)	2	8628864

cardiagn.com

39.		3.971	PLUG, 1/8 NPTF (OIL PRESS TEST HOLE) (AC-DELCO #444613)	97-02		1	444613
40.	3-A22	4.228	VALVE, 3RD ACCUM BALL CHK (*KIT10) (AC-DELCO #8634400)	97-02	Y (M30)	1	8634400
41.	3-A23	4.229	PIN, 2-4 BAND ANC (AC-DELCO #8654581)	97-02	Y (M30)	1	8654581
42.	3-A17	4.180	VALVE, A/TRNS FLUID/PUMP CVR BALL CHK (ALSO PART OF 103) (DOUBLE ORIFICE) (W/BALL) (*KIT10) (AC-DELCO #8663890)	97-02	Y (M30)	3	8663890
43.	3-A22	4.228	PIN, 3-4 ACCUM PSTN (4.226) (AC-DELCO #8628273)	97-02	Y (M30)	1	8628273
44.	3-A22	4.228	PISTON, 3-4 ACCUM (*KIT6) (AC-DELCO #8663608)	97-98	Y (M30)	1	8663608
		N.S.	PISTON, 3-4 ACCUM (AVAILABLE IN KIT ONLY FOR 1999 & ON) (*KIT6)				
45.	3-A23	4.229	RING, 3-4 ACCUM PSTN FLUID SEAL (*KIT1, KIT2, KIT6) (AC-DELCO #24206509)	97-98	Y (M30)	1	24206509
		N.S.	RING, 3-4 ACCUM PSTN FLUID SEAL (AVAILABLE IN KIT ONLY FROM 1999 & ON) (*KIT1, KIT2, KIT6)				
46.	3-A23	4.233	SPRING, 3-4 ACCUM PSTN (BLUE) (AC-DELCO #8639074)	97-98	Y (M30)	1	8639074
		N.S.	SPRING, 3-4 ACCUM PSTN (AVAILABLE IN KIT ONLY FROM 1999 & ON)				
47.		N.S.	GASKET, C/VLV BODY (*KIT1, KIT2, KIT4)				
48.	3-A25	4.265	PLATE, C/VLV BODY SPCR (AC-DELCO #24203953) (BUILT ON JULIAN DATE 00-352 & PRIOR)	97-01	Y (M30)	1	24203953
	3-A25	4.265	PLATE, C/VLV BODY SPCR (AC-DELCO #24218161) (BUILT ON JULIAN DATE 00-353 & FUTURE)	01-02	Y (M30)	1	24218161
49.		N.S.	FILTER, SHFT SOL VLV FLUID (*KIT9)	97			
	3-A25	4.265	FILTER, SHFT SOL VLV FLUID (AC-DELCO #24209144)	98-02	Y (M30)	1	24209144
50.	3-A25	4.265	FILTER, PRESS CONT SOL VLV FLUID (AC-DELCO #8683768)	97	Y (M30)	1	8683768
	3-A25	4.265	FILTER, PRESS CONT SOL VLV FLUID (AC-DELCO #24209145)	98-02	Y (M30)	1	24209145
52.		N.S.	GASKET, C/VLV BODY SPCR PLT (*KIT1, KIT2, KIT4)				
53.	3-A19	4.197	COVER, A/TRNS CASE FLUID PASG (4.265) (AC-DELCO #8682792)	97-02	Y (M30)	1	8682792
54.	3-A23	4.233	SPRING, 1-2 ACCUM PSTN (*KIT7) (AC-DELCO #24212030)	97-98	Y (M30)	1	24212030

cardiagn.com

	3-A23	4.233	SPRING, 1-2 ACCUM PSTN (VIOLET) (OTR) (*KIT7) (AC-DELCO #24209794)	99-01	Y (M30)	1	24209794
	3-A23	4.233	SPRING, 1-2 ACCUM PSTN OTR (*KIT7) (AC-DELCO #24219942)	02	Y (M30)	1	24219942
55.	3-A23	4.229	RING, 1-2 ACCUM PSTN FLUID SEAL (*KIT1, KIT6, KIT7) (AC-DELCO #24206509)	97-02	Y (M30)	1	24206509
56.		N.S.	PISTON, 1-2 ACCUM (*KIT1, KIT2, KIT6, KIT7)		.....		
57.	3-A22	4.228	COVER, 1-2 ACCUM (INCLS PIN) (*KIT7) (AC-DELCO #8686084)	97-00	Y (M30)	1	8686084
	3-A22	4.228	COVER, 1-2 ACCUM (INCLS PIN) (*KIT7) (AC-DELCO #24219935)	01-02	Y (M30)	1	24219935
	3-A22	4.228	PIN, 1-2 ACCUM PSTN (PART OF COVER) (*KIT7) (4.226) (AC-DELCO #8684426)	97-02	Y (M30)	1	8684426
58.		8.900	BOLT, HFH M6X1X65 9.8 PL ...	97-02	.....	AR	11506078
59.		8.900	BOLT, HEX M6X1X35 10.9 PC (ACCUM CVR TO CASE) (AC-DELCO #11503870)	97-02	.....	AR	11503870
		8.929	WASHER, FLAT 5/16X5/8X1/16 ZP HARD	97-02	.....	AR	2436162
60.	3-A25	4.265	VALVE, CONT (W/BODY & VLV) (REMAN) (AC-DELCO #24214880)	97-99	Y (M30)	1	24214880
	3-A25	4.265	VALVE, CONT (W/BODY & VLV) (AC-DELCO #24210317)	00	Y (M30)	1	24210317
	3-A25	4.265	VALVE, CONT (W/BODY & VLV) (AC-DELCO #24218186) (BUILT ON JULIAN DATE 01-032 & FUTURE)	01-02	Y (M30)	1	24218186
61.		8.899	BALL, GRADE 2, STD DIA 1/4 (2), CHROME STL (AC-DELCO #104918)	97-02	.....	AR	104918
62.	3-A25	4.265	BOLT, VLV BODY (M6X1X54.4) (AC-DELCO #8680741)	97-02	Y (M30)	3	8680741
	3-A25	4.265	BOLT, VLV BODY (M6X1X47.5) (AC-DELCO #8680742)	97-02	Y (M30)	9	8680742
	3-A25	4.265	BOLT, VLV BODY (M6X1X35) (8.900) (AC-DELCO #11503870)	97-02	Y (M30)	2	11503870
	3-A25	4.265	BOLT, VLV BODY (M6X1X65) (8.900)	97-02	Y (M30)	3	11506078
63.	3-A27	4.275	DETENT, MAN SHFT (AC-DELCO #8642247)	97-02	Y (M30)	1	8642247
64.		8.900	BOLT-HEX, M8X1.25X20, 16.88 THD, GM500 (10.9), PZOR, MACH (DTNT SPR TO VB) (AC-DELCO #11508687)	97-02	.....	AR	11508687
65.		N.S.	SEAL, WRG HARN PASS-THRU CONN O-RING (PART OF 66) ...		.....		
66.	3-M25	2.480	HARNESS, A/TRNS WRG (INCL 65, 67) (INCLS TCC SOL VLV) (AC-DELCO #15320476)	97-02	Y (M30)	1	15320476

cardiagn.com

	3-A10	4.122	HARNESS, A/TRNS WRG (INCL 65, 67) (INCLS TCC SOL VLV) (2.480) (AC-DELCO #15320476)	97-02	Y (M30)	1	15320476
67.		N.S.	SEAL, TCC SOL VLV (O RING) (PART OF 66)				
68.		8.900	BOLT, HEX M6X1X35 10.9 PC (TCC SOL VLV) (AC-DELCO #11503870)	97-02		AR	11503870
69.	3-A25	4.265	SWITCH, A/TRNS FLUID PRESS MAN VLV POSN (W/PLASTIC COVER) (AC-DELCO #24215111)	97-02	Y (M30)	1	24215111
70.	3-A25	4.265	BOLT, A/TRNS FLUID PRESS MAN VLV POSN SW (M6X1X17.7) (AC-DELCO #8680764)	97-02	Y (M30)	1	8680764
71.		N.S.	SEAL, A/TRNS FLUID FLTR (*KIT3)				
72.		N.S.	FILTER, A/TRNS FLUID (*KIT1, KIT2, KIT3)				
73.	3-A19	4.196	GASKET, A/TRNS FLUID PAN (ALSO PART OF 75) (*KIT1, KIT2, KIT3) (AC-DELCO #8654799)	97-02	Y (M30)	1	8654799
74.	3-A18	4.195	MAGNET, A/TRNS FLUID PAN (ALSO PART OF 75) (4.105) (AC-DELCO #8665830)	97-02	Y (M30)	1	8665830
75.	3-A18	4.195	PAN KIT, A/TRNS FLUID (INCL 73, 74) (SHALLOW W/PAN, GSKT & MAGNET, DRAIN PLUG NOT INCLUDED) (AC-DELCO #8663948)	97-02	Y (M30)	1	8663948
	3-A18	4.195	PAN KIT, A/TRNS FLUID (INCL 73, 74) (HAS DEEP SUMP, GSKT, MAGNET, DR PLUG) (AC-DELCO #24208593)	97-02	Y (M30)	1	24208593
76.	3-A19	4.196	BOLT, A/TRNS FLUID PAN (M8X1.25X19, 16)	97-02	Y (M30)	16	8657000
77.	3-A19	4.197	BOLT, FLUID PASG CVR (M6X1X17.7) (4.265) (AC-DELCO #8680764)	97-02	Y (M30)	3	8680764
78.	3-A27	4.294	PLUG, PARK PAWL SHF HOLE (ALSO PART OF 103) (.38 DIA) (AC-DELCO #8620318)	97-02	Y (M30)	1	8620318
79.	3-A27	4.294	PAWL KIT, PARK (INCLS 78, 81) (INST SHT, PAWL, PLUG & SHF) (AC-DELCO #8669911)	97-02	Y (M30)	1	8669911
80.	3-A28	4.295	SPRING, PARK PAWL (AC-DELCO #8642193)	97-02	Y (M30)	1	8642193
81.		N.S.	PAWL, PARK (PART OF 79)				
82.	3-A27	4.282	SEAL, MAN SHFT SHF (ALSO PART OF 84) (*KIT1, KIT2, KIT10) (AC-DELCO #8657163)	97-02	Y (M30)	1	8657163
83.	3-A27	4.275	RETAINER, MAN SHFT SHF (AC-DELCO #8642246)	97-02	Y (M30)	1	8642246
84.	3-A27	4.294	SHAFT KIT, MAN SHFT (INCL 82) (SHORT) (INCLS SEAL, INDIVIDUAL COMPONENT NOT SOLD SEPARATELY) (AC-DELCO #24210712)	97-02	Y (M30)	1	24210712

cardiagn.com

	3-A27	4.294	SHAFT KIT, MAN SHFT (INCL 82) (128.2MM) (LONG) (INCLS SEAL) (AC-DELCO #24210711)	97-02	Y (M30)	1	24210711
85.	3-A27	4.290	ACTUATOR, PARK PAWL (INCLS ACTUATOR, ROD & SPRINGS) (AC-DELCO #8667517)	97-02	Y (M30)	1	8667517
86.	3-A27	4.290	BRACKET, PARK PAWL ACTR (AC-DELCO #8667574)	97-02	Y (M30)	1	8667574
87.		8.900	BOLT-HEX, M8X1.25X20, 16.88 THD, GM500 (10.9), PZOR, MACH (PARK LOCK BRACKET TO CASE) (AC-DELCO #11508687)	97-02	.....	AR	11508687
88.	3-A27	4.279	LEVER, MAN SHFT DTNT (AC-DELCO #24200486)	97-02	Y (M30)	1	24200486
89.	3-A27	4.275	LINK, MAN VLV (*KIT1, KIT2) (AC-DELCO #8680731)	97-02	Y (M30)	1	8680731
90.	3-A27	4.275	NUT, MAN SHFT DTNT LVR (M10X15.6H THD) (AC-DELCO #8648178)	97-02	Y (M30)	1	8648178
91.		8.899	BALL, GRADE 2, STD DIA 1/4 (2), CHROME STL (NO. 10 CHECKBALL) (AC-DELCO #104918)	97-02	.....	AR	104918
93.		N.S.	STOP, TRANS FLUID LVL IND (NOT REQUIRED)		.....		
94.	3-A10	4.115	BOLT, T/CV HSG (M10X1.5X45, 10 OD, TORX PLUS HD) (AC-DELCO #24203265)	97-02	Y (M30)	8	24203265
97.	3-A9	4.104	PLUG, T/CV HSG ACC HOLE (28MM W/3 TANGS) (SMALL CVR) (AC-DELCO #24205899) .	97-02	Y (M30)	1	24205899
99.	3-A20	4.224	ORIFICE, LUB FLUID (4.3MM DIA) (*KIT10) (AC-DELCO #8663707)	97-02	Y (M30)	2	8663707
100.	3-A28	4.317	STUD, A/TRNS CASE EXTN (AC-DELCO #24207599)	97-02	Y	1	24207599
101.	3-A18	4.195	PLUG, A/TRNS FLUID PAN DRN (AC-DELCO #24207601)	97-02	Y (M30)	1	24207601
102.	3-A10	4.115	HOUSING, T/CV (AC-DELCO #24206286)	97-02	Y (M30)	1	24206286
103.		N.S.	CASE KIT, A/TRNS (*KIT10)		.....		
104.	3-A23	4.233	SPRING, 1-2 ACCUM PSTN (') (ORANGE) (INNER) (AC-DELCO #8685655)	97-98	Y (M30)	1	8685655
	3-A23	4.233	SPRING, 1-2 ACCUM PSTN OTR (PINK) (INNER) (AC-DELCO #8685656)	99-01	Y (M30)		8685656
	3-A23	4.233	SPRING, 1-2 ACCUM PSTN INR (AC-DELCO #24220146)	02	Y (M30)	1	24220146
105.	3-A23	4.233	SPRING, 2-4 BAND SERVO PSTN CUSH INR (AC-DELCO #8681195)	97-02	Y (M30)	1	8681195
106.	3-A17	4.176	SEAL, OUTPUT SHF (AC-DELCO #24207010)	97-02	Y (M30)	1	24207010
377.		N.S.	VALVE, PRESS CONT SOL (*KIT9)	97	.....		

cardiagn.com

	3-A25	4.265	VALVE, PRESS CONT SOL (AC-DELCO #24209276)	98-00	Y (M30)	1	24209276
	3-A25	4.265	VALVE, PRESS CONT SOL (AC-DELCO #24220158)	01-02	Y (M30)	1	24220158

SERVICE KITS

	3-A7	4.003	TRANSMISSION, AUTO (GOODWRENCH REMAN) (CODE 7YDD)	97	Y (M30)	1	24208554
	3-A7	4.003	TRANSMISSION, AUTO (GOODWRENCH REMAN) (CODE 1YDD)	01	Y (LS1, M30)	1	24219086
	3-A7	4.003	TRANSMISSION, AUTO (GOODWRENCH REMAN) (CODE 2YDD)	02	Y (M30)	1	24221293
	3-A7	4.003	TRANSMISSION, AUTO (GOODWRENCH REMAN) (CODE 0YDD)	00	Y (LS1, M30, GU2, G90)	1	24216090
	3-A7	4.003	TRANSMISSION, AUTO (GOODWRENCH REMAN) (CODE 8YDD)	98	Y (LS1, M30)	1	24210674
	3-A7	4.003	TRANSMISSION, AUTO (GOODWRENCH REMAN) (CODE 9YDD)	99	Y (LS1, M30)	1	24212632
1.	3-A7	4.005	GASKET KIT, A/TRNS SERV (INCL 2, 5, 6, 18-9, 21, 26-7, 30, 44-5, 47, 52, 55-6, 72-3, 82, 89, 106) (W/O PLATES OR PISTONS) (AC-DELCO #24201803)	97-01	Y (M30)	1	24201803
	3-A7	4.005	GASKET KIT, A/TRNS SERV (INCL 2, 5, 6, 18-9, 21, 26-7, 30, 44-5, 47, 52, 55-6, 72-3, 82, 89, 106) (AC-DELCO #24221347)	02	Y (M30)	1	24221347
2.		N.S.	TRANSMISSION KIT, AUTO (SERV OVERHAUL W/PLT, GSKT, SEAL) (USE 24201803 GASKET KIT T/W 24209562 PLATE KIT T/W 24204496 PISTON KIT.)		.....		
3.	3-A19	4.197	FILTER KIT, A/TRNS FLUID (INCL 71-73) (DEEP SUMP) (INCLS FILTER, GASKET, SEAL & INSTR SHT) (AC-DELCO #24208574) ..	97-02	Y (M30)	1	24208574
4.	3-A25	4.265	GASKET KIT, C/VLV BODY SPCR PLT (INCL 47, 52) (AC-DELCO #8685951)	97-00	Y (M30)	1	8685951
	3-A25	4.265	GASKET KIT, C/VLV BODY SPCR PLT (INCL 47, 52) (AC-DELCO #24221350)	01-02	Y (M30)	1	24221350
5.	3-A23	4.229	RING KIT, 2-4 BAND SERVO 2ND APPL PSTN FLUID SEAL (INCL 19) (.55 RATIO) (INCLS INR & OTR RING) (AC-DELCO #8642924)	97-02	Y (M30)	1	8642924

cardiagn.com

	3–A23	4.229	RING KIT, 2–4 BAND SERVO 2ND APPL PSTN FLUID SEAL (INCL 18, 19) (.74 RATIO) (INCLS 2 RINGS) (AC–DELCO #8642925)	97–02	Y (M30)	1	8642925
6.	3–A22	4.228	PISTON KIT, 1–2 & 3–4 ACCUM (INCL 44, 45, 55, 56) (W/RINGS & ALUM PISTONS) (AC–DELCO #24204496)	97–02	Y (M30)	1	24204496
	3–A22	4.228	PISTON KIT, 1–2 ACCUM (INCL 44, 45, 55, 56) (INCL 1–2 PLASTIC PISTON & 3–4 ALUM PISTON) (AC–DELCO #24214343)	97–01	Y (M30)	1	24214343
	3–A22	4.228	PISTON KIT, 1–2 ACCUM (INCL 44, 45, 55, 56) (INCLS 1 1/2 & 1 3/4 ACCUM PSTN & SEAL ASM) .	01–02	Y (M30)	1	24221919
7.	3–A22	4.228	ACCUMULATOR, 1–2 (INCL 43, 54–7) (AC–DELCO #24201956)	97–98	Y (M30)	1	24201956
	3–A22	4.228	ACCUMULATOR, 1–2 (INCL 43, 54–7) (AC–DELCO #24203239)	99–01	Y (M30)	1	24203239
	3–A22	4.228	ACCUMULATOR, 1–2 (INCL 43, 54–7) (AC–DELCO #24220143)	02	Y (M30)	1	24220143
8.	3–A22	4.228	PISTON KIT, 2–4 BAND SERVO 2ND APPLY (INCL 17, 18, 19) (YELLOW) (.74) (AC–DELCO #8642079)	97–02	Y (M30)	1	8642079
9.	3–A25	4.265	VALVE KIT, PRESS CONT SOL (W/SHFT SOL VLV FLUID FLTR) (INCL 49, 377) (AC–DELCO #24216254)	97	Y (M30)	1	24216254
10.	3–A9	4.103	CASE KIT, A/TRNS (INCL 9, 10, 11, 38, 40, 42, 82, 99, 103) (AC–DELCO #24211242)	97–02	Y (M30)	1	24211242

RPO DEFINITIONS
GU2 – AXLE,REAR,2.73 RATIO
GU6 – AXLE,REAR,3.42 RATIO
G90 – AXLE REAR 3.15 RATIO
LS1 – ENGINE GAS, 8 CYL, 5.7L, SFI, ALUMINUM ENGINE
MM6 – TRANSMISSION MAN 6 SPD, BORG WARNER, 85MM, 1ST 2.66, 6TH 0.50, O/D
M30 – TRANSMISSION,AUTOMATIC 4 SPEED,4L60E,ELECTRONIC

cardiagn.com

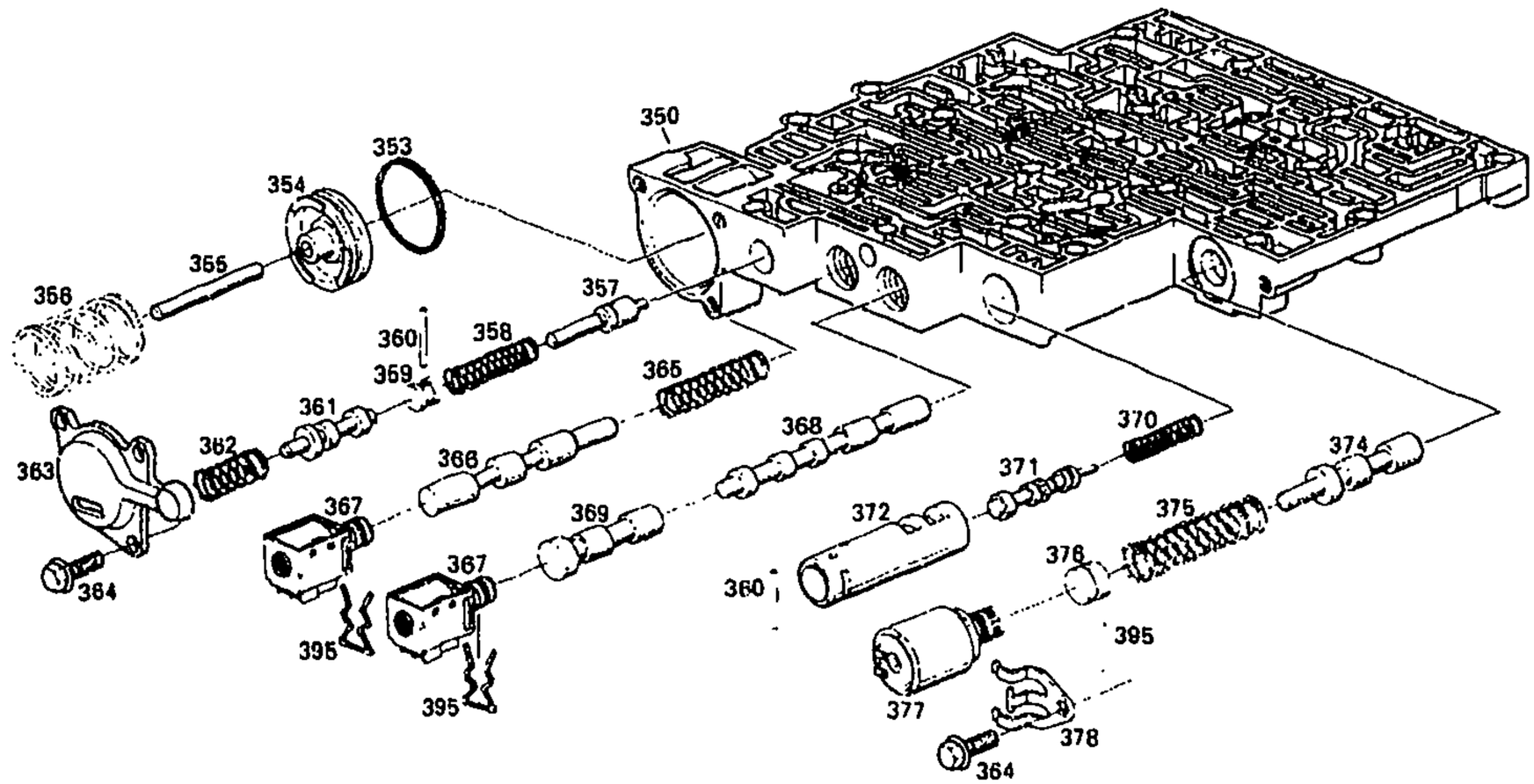

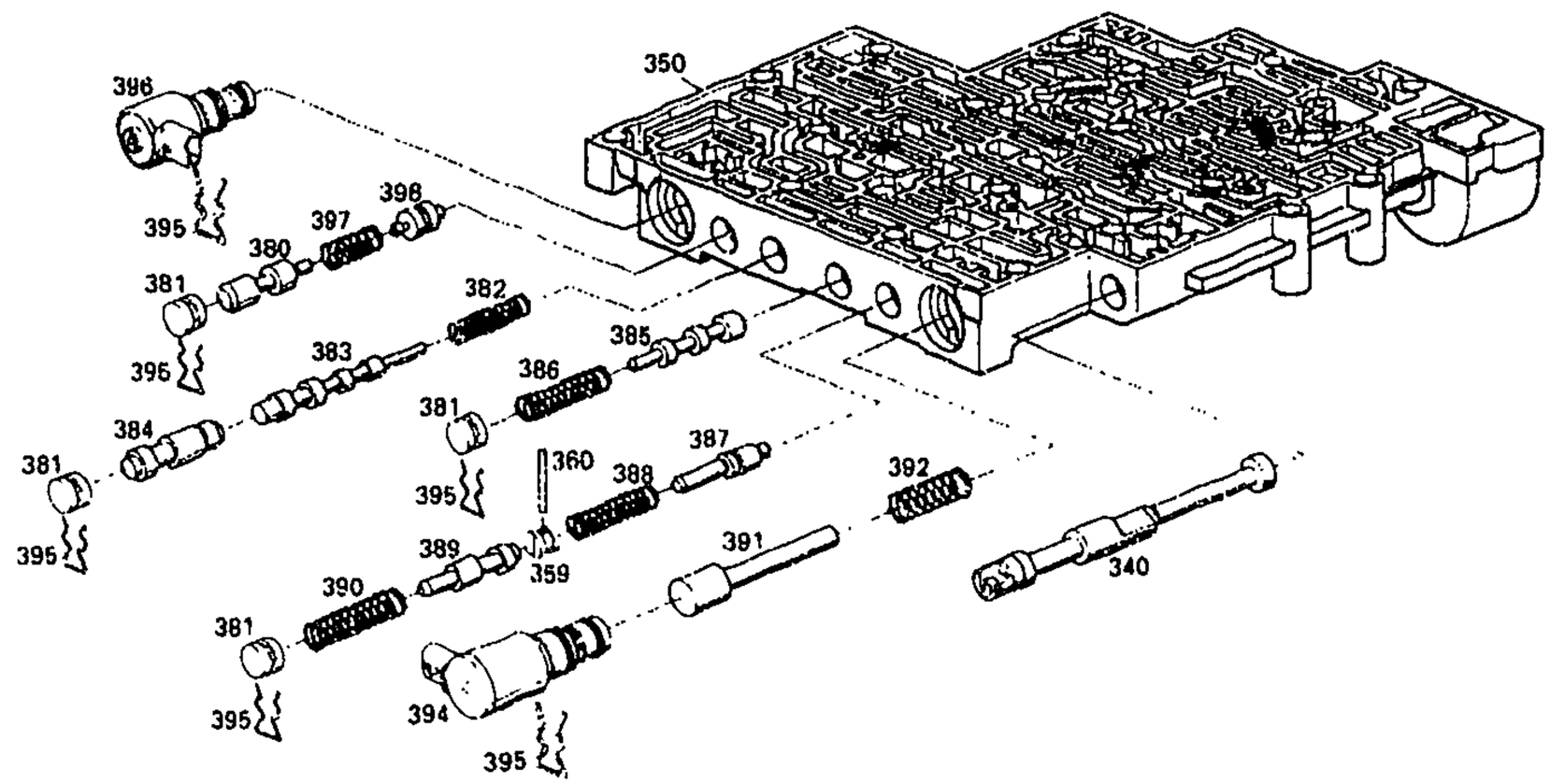

GM04-469Y

1997-2002 Y AUTOMATIC TRANSMISSION (M30) PART 3 (4L60E) CONTROL VALVE

340.	3-A27	4.279	VALVE, MAN (*KIT1) (4.265) (AC-DELCO #24203484)	97-02	Y (M30)	1	24203484
350.		N.S.	BODY, C/VLV (*KIT1)		....		
353.	3-A23	4.229	RING, FWD CLU ACCUM PSTN FLUID SEAL (*KIT1) (AC-DELCO #8680653)	97	Y (M30)	1	8680653

cardiagn.com

	3-A23	4.229	RING, FWD CLU ACCUM PSTN FLUID SEAL (*KIT1) (AC-DELCO #24206508)	98-02	Y (M30)	1	24206508
354.	3-A22	4.228	PISTON, FWD CLU ACCUM (*KIT1) (AC-DELCO #24200126)	97-02	Y (M30)	1	24200126
355.		N.S.	PIN, 1-2 ACCUM PSTN (*KIT1)				
		N.S.	PIN, 2-3 ACCUM PSTN (*KIT1)				
356.	3-A23	4.233	SPRING, FWD CLU ACCUM PSTN (*KIT1) (AC-DELCO #24208765)	97-02	Y (M30)	1	24208765
357.		N.S.	VALVE, FWD CLU ABUSE (*KIT1)				
358.		N.S.	SPRING, FWD CLU ABUSE VLV (*KIT1)				
359.		N.S.	PLUG, TCC C/VLV BORE (*KIT1)				
360.	3-A16	4.169	PIN, FWD CLU ABUSE VLV BORE PLUG (*KIT1) (4.265) (AC-DELCO #8680765)	97-02	Y (M30)	1	8680765
	3-A25	4.265	PIN, REV ABUSE VLV BORE PLUG (*KIT1) (AC-DELCO #8680765)	97-02	Y (M30)	1	8680765
	3-A25	4.265	PIN, 1-2 ACCUM VLV BORE PLUG (*KIT1) (AC-DELCO #8680765)	97-02	Y (M30)	1	8680765
361.		N.S.	VALVE, LOW OVERRUN (*KIT1)				
362.		N.S.	SPRING, LOW OVERRUN VLV (*KIT1)				
363.	3-A22	4.228	COVER, FWD CLU ACCUM (W/SLOTS) (*KIT1) (AC-DELCO #24206338)	97-02	Y (M30)	1	24206338
364.	3-A24	4.241	BOLT, FWD CLU ACCUM CVR (M6X1X17.7) (*KIT1) (4.265) (AC-DELCO #8680764)	97-02	Y (M30)	3	8680764
	3-A25	4.265	BOLT, PRESS CONT SOL VLV CLA (M6X1X17.7) (*KIT1) (AC-DELCO #8680764)	97-02	Y (M30)	1	8680764
365.		N.S.	SPRING, 1-2 SHFT VLV (*KIT1)				
366.		N.S.	VALVE, 1-2 SHFT (*KIT1)				
367.	3-A25	4.265	VALVE, 1-2, 3-4 SHFT SOL (INCLS SEAL) (*KIT1) (AC-DELCO #10478131)	97-02	Y (M30)	1	10478131
	3-A25	4.265	VALVE, 2-3 SHFT SOL (INCLS SEAL) (*KIT1) (AC-DELCO #10478131)	97-02	Y (M30)	1	10478131
368.		N.S.	VALVE, 2-3 SHUTTLE (*KIT1)				
369.		N.S.	VALVE, 2-3 SHFT (*KIT1)				
370.		N.S.	SPRING, 1-2 ACCUM VLV (*KIT1)				
371.		N.S.	VALVE, 1-2 ACCUM (*KIT1)				
372.		N.S.	SLEEVE, 1-2 ACCUM VLV (*KIT1)				
374.		N.S.	VALVE, ACTR FEED LIM (*KIT1)				
375.		N.S.	SPRING, ACTR FEED LIM VLV (*KIT1)				
376.		N.S.	PLUG, TCC C/VLV BORE (*KIT1)				
377.		N.S.	VALVE, PRESS CONT SOL (*KIT1, KIT2)	97			

cardiagn.com

	3-A25	4.265	VALVE, PRESS CONT SOL (*KIT1) (AC-DELCO #24209276)	98-00	Y (M30)	1	24209276
	3-A25	4.265	VALVE, PRESS CONT SOL (*KIT1) (AC-DELCO #24220158)	01-02	Y (M30)	1	24220158
378.	3-A25	4.265	CLAMP, PRESS CONT SOL VLV (*KIT1) (AC-DELCO #8682007)	97-02	Y (M30)	1	8682007
380.		N.S.	VALVE, TCC (*KIT1)				
381.		N.S.	PLUG, TCC C/VLV BORE (*KIT1)				
382.		N.S.	SPRING, 4-3 SEQUENCE VLV (*KIT1)				
383.		N.S.	VALVE, 4-3 SEQUENCE (*KIT1)				
384.		N.S.	VALVE, 3-4 RLY (*KIT1)				
385.		N.S.	VALVE, 3-4 SHFT (*KIT1)				
386.		N.S.	SPRING, 3-4 SHFT VLV (*KIT1)				
387.		N.S.	VALVE, ABUSE (REV) (*KIT1)				
388.		N.S.	SPRING, ABUSE VLV (REV) (*KIT1)				
389.		N.S.	VALVE, 3-2 DNSHFT (*KIT1)				
390.		N.S.	SPRING, 3-2 DNSHFT VLV (*KIT1)				
391.		N.S.	VALVE, 2-3 CONT (*KIT1)				
392.		N.S.	SPRING, 3-2 C/VLV (*KIT1)				
394.	3-A25	4.265	VALVE, 3-2 SHFT SOL (*KIT1) (4.122) (AC-DELCO #24212327)	97-02	Y (M30)	1	24212327
395.	3-A25	4.265	RETAINER, TCC PWM SOL VLV (*KIT1) (AC-DELCO #8680781)	97-02	Y (M30)	1	8680781
	3-A25	4.265	RETAINER, 1-2, 3-4 SHFT SOL VLV (*KIT1) (AC-DELCO #8680781)	97-02	Y (M30)	1	8680781
	3-A25	4.265	RETAINER, 2-3 SHFT SOL VLV (*KIT1) (AC-DELCO #8680781)	97-02	Y (M30)	1	8680781
	3-A25	4.265	RETAINER, 3-4 SHFT VLV BORE PLUG (*KIT1) (AC-DELCO #8680781)	97-02	Y (M30)	1	8680781
	3-A25	4.265	RETAINER, ACTR FEED LIM VLV BORE PLUG (*KIT1) (AC-DELCO #8680781)	97-02	Y (M30)	1	8680781
	3-A25	4.265	RETAINER, TCC SIG VLV BORE PLUG (*KIT1) (AC-DELCO #8680781)	97-02	Y (M30)	1	8680781
	3-A25	4.265	RETAINER, 3-4 RLY VLV BORE PLUG (*KIT1) (AC-DELCO #8680781)	97-02	Y (M30)	1	8680781
	3-A25	4.265	RETAINER, 3-2 DNSHFT VLV BORE PLUG (*KIT1) (AC-DELCO #8680781)	97-02	Y (M30)	1	8680781
	3-A25	4.265	RETAINER, 3-2 SHFT SOL VLV (*KIT1) (AC-DELCO #8680781)	97-02	Y (M30)	1	8680781
396.	3-A25	4.265	VALVE, TCC PWM SOL (PWM) (*KIT1) (4.122) (AC-DELCO #24212690)	97-02	Y (M30)	1	24212690
397.		N.S.	SPRING, TCC C/VLV (*KIT1)				
398.		N.S.	VALVE, TCC PWM SOL (*KIT1)				

cardiagn.com

SERVICE KITS

1.	3–A25	4.265	VALVE, CONT (W/BODY & VLV) (REMAN) (INCL 340–398) (AC–DELCO #24214880)	97–99	Y (M30)	1	24214880
	3–A25	4.265	VALVE, CONT (W/BODY & VLV) (INCL 340–398) (AC–DELCO #24210317)	00	Y (M30)	1	24210317
	3–A25	4.265	VALVE, CONT (W/BODY & VLV) (INCL 340–398) (AC–DELCO #24218186) (BUILT ON JULIAN DATE 01–032 & FUTURE)	01–02	Y (M30)	1	24218186
2.	3–A25	4.265	VALVE KIT, PRESS CONT SOL (W/SHFT SOL VLV FLUID FLTR) (INCL 377) (AC–DELCO #24216254)	97	Y (M30)	1	24216254

RPO DEFINITIONS
M30 – TRANSMISSION,AUTOMATIC 4 SPEED,4L60E,ELECTRONIC

cardiagn.com

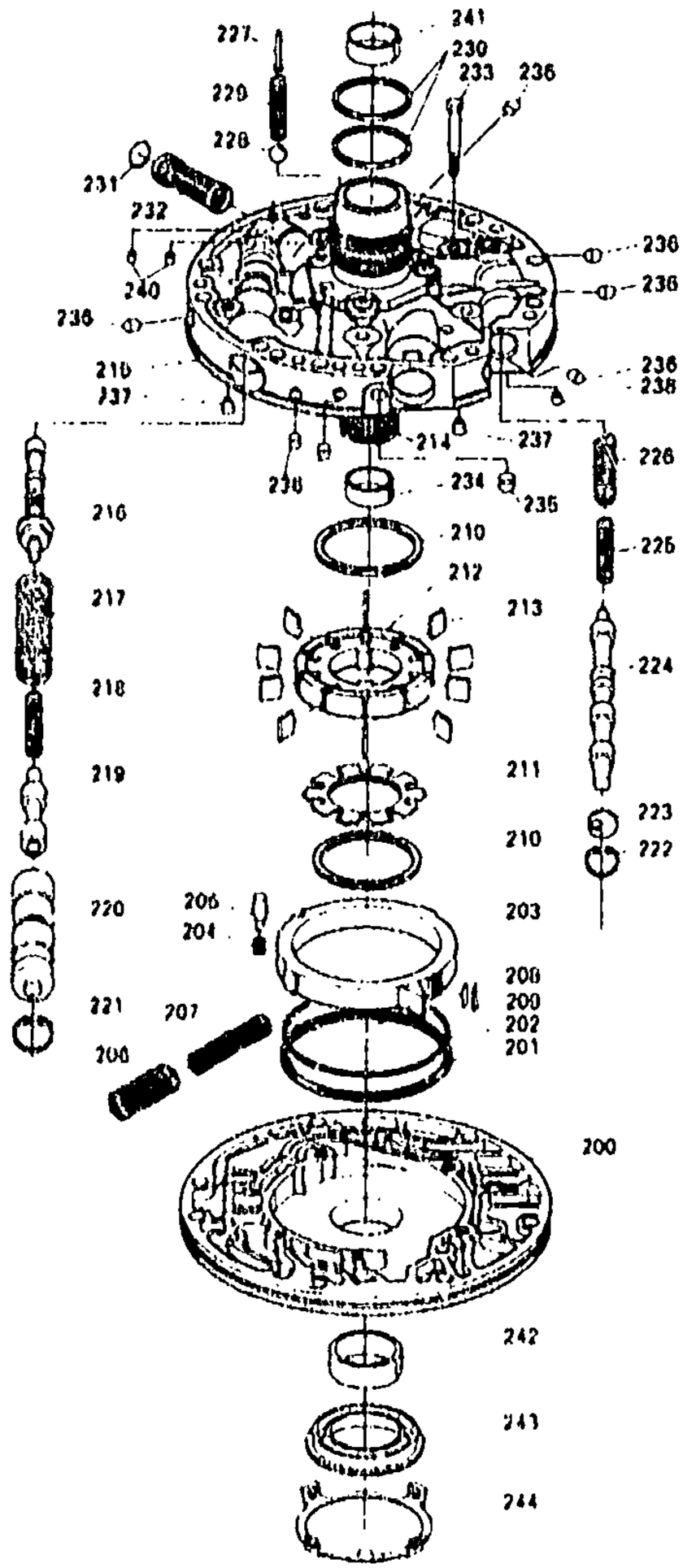

GM04-470Y

1997-2002 Y AUTOMATIC TRANSMISSION (M30) PART 4 (4L60E) OIL PUMP

200.	3-A20	4.224	BODY KIT, A/TRNS FLUID PUMP (INCL 201 THRU 213, 242 THRU 244) (13 VANE) (AC DELCO #24208606)	97-02 Y (M30)	1 24208606
201.		N.S.	RING, A/TRNS FLUID PUMP SLIDE FLUID SEAL, (ALSO PART OF 200, 212) (*KIT1, KIT2, KIT3)		

cardiagn.com

202.		N.S.	SEAL, A/TRNS O/PMP SLIDE (O RING) (ALSO PART OF 200, 212) (*KIT1, KIT2, KIT3)				
203.	3-A20	4.224	SLIDE, A/TRNS FLUID PUMP (ALSO PART OF 200) (17.948 MM) (AC - DELCO #24205405)	97	Y (M30)	1	24205405
	3-A20	4.224	SLIDE, A/TRNS FLUID PUMP (ALSO PART OF 200) (17.961 MM) (AC-DELCO #24205406)	97	Y (M30)	1	24205406
	3-A20	4.224	SLIDE, A/TRNS FLUID PUMP (ALSO PART OF 200) (17.974 MM) (AC-DELCO #24205407)	97	Y (M30)	1	24205407
	3-A20	4.224	SLIDE, A/TRNS FLUID PUMP (ALSO PART OF 200) (17.987 MM) (AC-DELCO #24205408)	97	Y (M30)	1	24205408
	3-A20	4.224	SLIDE, A/TRNS FLUID PUMP (ALSO PART OF 200) (18.000 MM) (AC-DELCO #24205409)	97	Y (M30)	1	24205409
	3-A20	4.224	SLIDE, A/TRNS FLUID PUMP (ALSO PART OF 200) (17.948) (AC-DELCO #24212478)	98-02	Y (M30)	1	24212478
	3-A20	4.224	SLIDE, A/TRNS FLUID PUMP (ALSO PART OF 200) (17.961MM) (AC-DELCO #24212479)	98-02	Y (M30)	1	24212479
	3-A20	4.224	SLIDE, A/TRNS FLUID PUMP (ALSO PART OF 200) (17.974MM) (AC-DELCO #24212480)	98-02	Y (M30)	1	24212480
	3-A20	4.224	SLIDE, A/TRNS FLUID PUMP (ALSO PART OF 200) (17.987MM) (AC--DELCO #24212481)	98-02	Y (M30)	1	24212481
	3-A20	4.224	SLIDE, A/TRNS FLUID PUMP (ALSO PART OF 200) (18.00MM) (AC-DELCO #24212482)	98-02	Y (M30)	1	24212482
204.	3-A21	4.226	SPRING, A/TRNS FLUID PUMP SLIDE PIV PIN (ALSO PART OF 200) (AC-DELCO #8634098)	97-02	Y (M30)	1	8634098
205.	3-A21	4.226	PIN, A/TRNS FLUID PUMP SLIDE PIV (ALSO PART OF 200) (AC-DELCO #8634097)	97-02	Y (M30)	1	8634097
206.	3-A21	4.226	SPRING, A/TRNS FLUID PUMP SLIDE OTR (AC-DELCO #8639563)	97-02	Y (M30)	1	8639563
207.	3-A21	4.226	SPRING, A/TRNS FLUID PUMP SLIDE INR (ALSO PART OF 200) (AC-DELCO #8639562)	97-02	Y (M30)	1	8639562
208.		N.S.	SUPPORT, A/TRNS FLUID PUMP SLIDE SEAL (PART OF 200, 212) (*KIT1, KIT2, KIT3)				
209.		N.S.	SEAL, A/TRNS FLUID PUMP SLIDE (PART OF 200, 212) (*KIT1, KIT2, KIT3)				
210.	3-A21	4.226	RING, A/TRNS FLUID PUMP VANE (ALSO PART OF 200) (AC-DELCO #24201144)	97-02	Y (M30)	2	24201144

cardiagn.com

211.	3-A21	4.226	GUIDE, A/TRNS FLUID PUMP ROT (ALSO PART OF 200, 212) (13 VANE) (AC-DELCO #24205410)	97-02	Y (M30)	1	24205410
212.	3-A19	4.210	ROTOR, A/TRNS FLUID PUMP (INCL 201-2, 208-9, 211, 213) (17.955MM) (W/GDE, VANES & SEALS) (4.224) (AC-DELCO #8649951)	97-02	Y (M30)	1	8649951
	3-A19	4.210	ROTOR, A/TRNS FLUID PUMP (INCL 201-2, 208-9, 211, 213) (17.968MM) (W/GDE, VANES & SEALS) (4.224) (AC-DELCO #8649952)	97-02	Y (M30)	1	8649952
	3-A19	4.210	ROTOR, A/TRNS FLUID PUMP (INCL 201-2, 208-9, 211, 213) (17.981MM) (W/GDE, VANES & SEALS) (4.224) (AC-DELCO #8649953)	97-02	Y (M30)	1	8649953
	3-A19	4.210	ROTOR, A/TRNS FLUID PUMP (INCL 201-2, 208-9, 211, 213) (17.994MM) (W/GDE, VANES & SEALS) (4.224) (AC-DELCO #8649954)	97-02	Y (M30)	1	8649954
	3-A19	4.210	ROTOR, A/TRNS FLUID PUMP (INCL 201-2, 208-9, 211, 213) (18.007MM) (W/GDE, VANES & SEALS) (4.224) (AC-DELCO #8649955)	97-02	Y (M30)	1	8649955
213.	3-A21	4.226	VANE, A/TRNS FLUID PUMP (ALSO PART OF 200, 212) (AC-DELCO #8631280)	97-02	Y	10	8631280
214.		N.S.	SHAFT, STATOR (PART OF 215) .		.....		
215.	3-A20	4.224	COVER, A/TRNS FLUID PUMP (REMAN) (INCL 214, 216 THRU 227, 231, 232, 234 THRU 240.) (13--VANE) (AC-DELCO #24213024)	97	Y (M30)	1	24213024
	3-A20	4.224	COVER, A/TRNS FLUID PUMP (REMAN) (INCL 214, 216 THRU 227, 231, 232, 234 THRU 240.) (13--VANE) (AC-DELCO #24213024) (W/JULIAN DATE 98-018 & PRIOR, FOR 2ND DSGN SEE 24213268)	98	Y (M30) (1ST DES)	1	24213024
	3-A20	4.224	COVER KIT, A/TRNS FLUID PUMP (INCL 214 216 THRU 227, 231, 232, 234 THRU 240.) (13-VANE) (INCLS COVER & RINGS) (AC-DELCO #24213268) (W/JULIAN DATE 98-019 & AFTER, FOR 1ST DSGN SEE 24213024)	98	Y (M30) (2ND DES)	1	24213268

cardiagn.com

	3-A20	4.224	COVER KIT, A/TRNS FLUID PUMP (INCL 214, 216 THRU 227, 231, 232, 234 THRU 240.) (13-VANE) (INCLS COVER & RINGS) (AC-DELCO #24213268)	99-02	Y (M30)	1	24213268
216.	3-A24	4.262	VALVE, PRESS REG (PART OF 215) (4.216) (AC-DELCO #8684049)	97-02	Y (M30)	1	8684049
217.	3-A24	4.262	SPRING, PRESS REG VLV OTR (PART OF 215) (4.216) (AC-DELCO #8680682)	97-02	Y (M30)	1	8680682
218.	3-A24	4.262	SPRING, PRESS REG VLV INR (PART OF 215) (AC-DELCO #8680684)	97-02	Y (M30)	1	8680684
219.		N.S.	VALVE, REV BOOST (PART OF 215) (*KIT4)		.....		
220.		N.S.	SLEEVE, REV BOOST VLV (PART OF 215) (*KIT4)		.....		
221.	3-A25	4.265	RING, T/V BOOST VLV BUSH RET (PART OF 215) (*KIT5) (4.216) (AC-DELCO #11503348)	97-02	Y (M30)	1	11503348
222.		8.934	RING, TYPE TA INT RET .000X.68X.037PL (PART OF 215) (*KIT5) (AC-DELCO #274267) ..	97-02	.....	AR	274267
223.	3-A24	4.262	STOP, TCC VLV (PART OF 215) (4.216) (AC-DELCO #8634705) .	97-02	Y (M30)	1	8634705
224.	3-A25	4.265	VALVE, TCC (PART OF 215) (AC-DELCO #24205509)	97-02	Y (M30)	1	24205509
225.	3-A25	4.265	SPRING, TCC VLV INR (PART OF 215) (4.216) (AC-DELCO #24201610)	97-02	Y (M30)	1	24201610
226.	3-A25	4.265	SPRING, TCC VLV OTR (PART OF 215) (4.216) (AC-DELCO #24201611)	97-02	Y (M30)	1	24201611
227.	3-A24	4.262	RIVET, PRESS RLF BALL VLV SPR (PART OF 215) (4.216) (AC-DELCO #8642619)	97-02	Y (M30)	1	8642619
228.		8.899	BALL, 3/8 STEEL (CLU PRESS RLF VLV) (AC-DELCO #7826284)	97-02	.....	AR	7826284
229.	3-A25	4.265	SPRING, PRESS RLF BALL VLV (AC-DELCO #8634106)	97-02	Y (M30)	1	8634106
230.	3-A21	4.226	RING, REV INPUT CLU HSG FLUID SEAL (*KIT1, KIT2) (AC-DELCO #8681292)	97-02	Y (M30)	2	8681292
231.	3-A20	4.224	SEAL, A/TRNS FLUID PUMP CVR SCRN (ALSO PART OF 215, 232) (AC-DELCO #8642581)	97-02	Y (M30)	1	8642581
232.	3-A20	4.224	SCREEN, A/TRNS FLUID PUMP CVR (W/SEAL) (INCL 231, PART OF 215) (AC-DELCO #8642912)	97-02	Y (M30)	1	8642912
233.		8.900	BOLT, HEX, 8X1.25X40, 33.2 THD, GM 500M, 10.9, PC, MACH (AC-DELCO #11500921)	97-02	.....	AR	11500921
234.	3-A21	4.226	BUSHING, INPUT SHF FRT (PART OF 215) (AC-DELCO #8647954)	97-02	Y (M30)	1	8647954

cardiagn.com

235.		N.S.	PLUG, A/TRNS FLUID PUMP CVR (REQ'D ON TRANS W/O AUX VLV BODY)				
236.	3-A20	4.224	PLUG, A/TRNS FLUID PUMP CVR (PART OF 215) (6.80MM DIA) (AC-DELCO #8623886)	97-02	Y (M30)	8	8623886
237.	3-A10	4.123	VALVE, FWD CLU HSG BALL CHK (PART OF 215) (SINGLE ORIFICE) (TALL & NARROW) (4.226) (AC-DELCO #8628732)	97-00	Y (M30)	1	8628732
238.	3-A20	4.224	ORIFICE, TCC SIG (PART OF 215) (4.85MM DIA) (AC-DELCO #8634284)	97-02	Y (M30)	1	8634284
240.	3-A20	4.224	ORIFICE, A/TRNS FLUID PUMP AIR BL (PART OF 215) (AC-DELCO #24203787)	97-02	Y (M30)	1	24203787
	3-A20	4.224	ORIFICE, 3-4 CLU BL (AC-DELCO #24203787)	97-02	Y (M30)	1	24203787
241.	3-A21	4.226	BUSHING, INPUT SHF RR (AC-DELCO #8642904)	97-02	Y (M30)	1	8642904
242.	3-A10	4.115	BUSHING, T/CV (ALSO PART OF 200) (AC-DELCO #24206030)	97-02	Y (M30)	1	24206030
243.	3-A21	4.226	SEAL, T/CV FLUID (ALSO PART OF 200) (AC-DELCO #24202535)	97-02	Y (M30)	1	24202535
244.	3-A21	4.226	RETAINER, T/CV FLUID SEAL (ALSO PART OF 200) (*KIT1, KIT2) (AC-DELCO #8654491)	97-02	Y (M30)	1	8654491

SERVICE KITS

1.	3-A7	4.005	GASKET KIT, A/TRNS SERV (INCL 201, 202, 208-9, 230, 244) (W/O PLATES OR PISTONS) (AC-DELCO #24201803)	97-01	Y (M30)	1	24201803
	3-A7	4.005	GASKET KIT, A/TRNS SERV (INCL 201, 202, 208-9, 230, 244) (AC-DELCO #24221347)	02	Y (M30)	1	24221347
2.		N.S.	TRANSMISSION KIT, AUTO (SERV OVERHAUL W/PLT, GSKT, SEAL) (USE 24201803 GASKET KIT T/W 24209562 PLATE KIT T/W 24204496 PISTON KIT.)	97-00			
3.	3-A21	4.226	SEAL KIT, A/TRNS FLUID PUMP SLIDE (INCL 201-2, 208-9) (INCLS RING, SEALS&SUPT) (AC-DELCO #8634906)	97-02	Y (M30)	1	8634906
4.	3-A25	4.265	VALVE KIT, REV BOOST (INCL 219, 220) (AC-DELCO #24200372)	97-02	Y (M30)	1	24200372
5.	3-A7	4.005	RING KIT, RET (INCL 221, 222) (AC-DELCO #8642910)	97-02	Y (M30)	1	8642910

RPO DEFINITIONS
M30 - TRANSMISSION,AUTOMATIC 4 SPEED,4L60E,ELECTRONIC

cardiagn.com

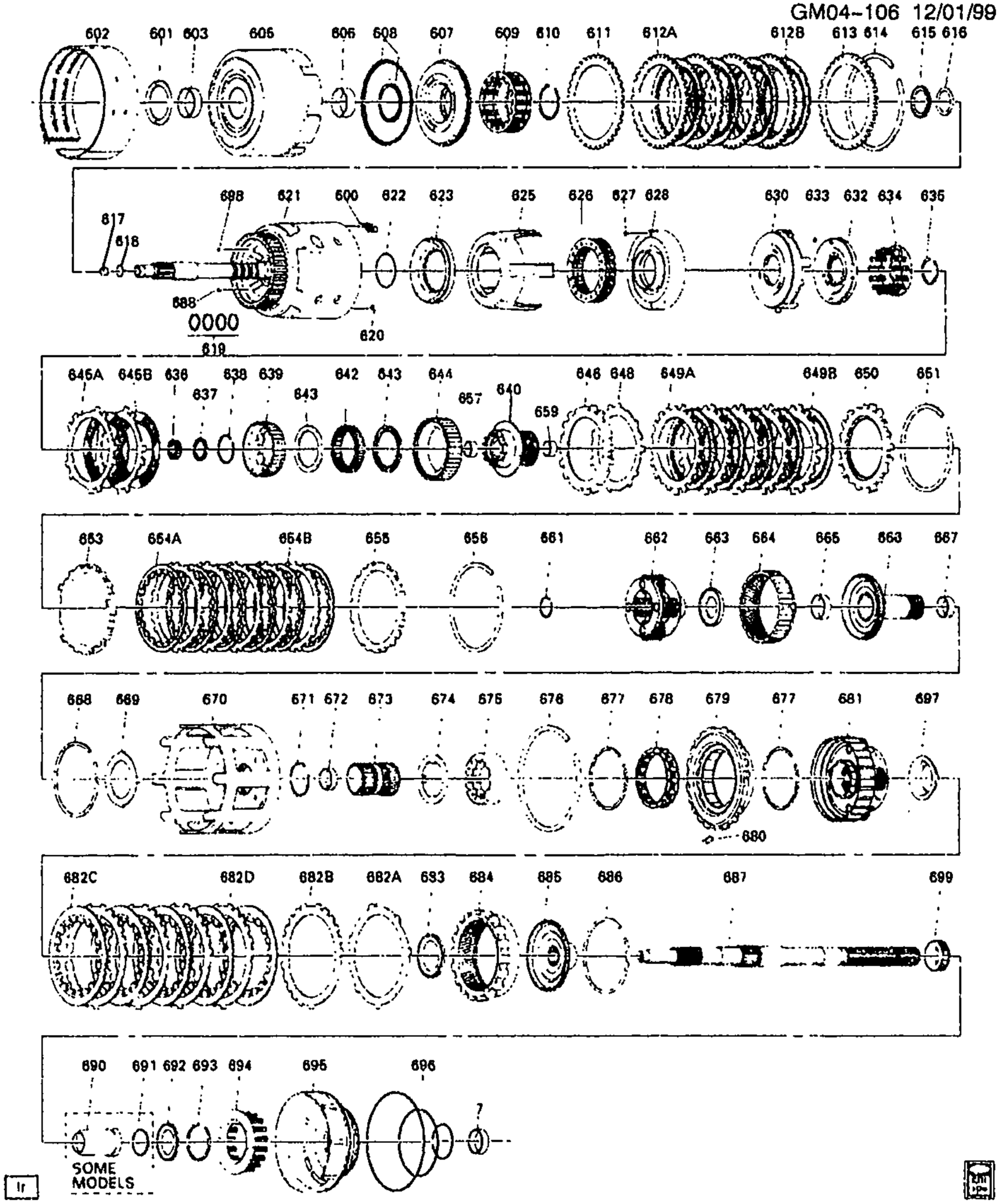

GM04-106Y

1999-2002 Y AUTOMATIC TRANSMISSION (M30) PART 2 (4L60E) CLUTCH GEARS

7.	3-D14	5.556	BUSHING, PROP SHF FRT SLIP YOKE (INSIDE DIA 1.506-1.509) (PART OF TRANS CASE) (4.104) (AC-DELCO #8680027)	99-02 Y (M30)	1	8680027

© 2001 GENERAL MOTORS SERVICE PARTS OPERATIONS-CHEVROLET-15Y

cardiagn.com

600.	3-A16	4.167	SPRING, 3-4 CLU (BOOST) (INCLS RET & (2) SPRNGS) (*KIT7) (4.163) (AC-DELCO #8667424)	99-02	Y (M30)	5	8667424
601.	3-A18	4.189	WASHER, REV INPUT CLU HSG THR (4.226) (AC-DELCO #08642041)	99-02	Y (M30)	1	8642041
	3-A18	4.189	WASHER, REV INPUT CLU HSG THR (TO STATOR SHF) (1.87-1.97MM) (4.158) (AC-DELCO #8642067)	99-02	Y (M30)	1	8642067
	3-A18	4.189	WASHER, REV INPUT CLU HSG THR (TO STATOR SHF) (2.04-2.14MM) (4.158) (AC-DELCO #8642068)	99-02	Y (M30)	1	8642068
	3-A18	4.189	WASHER, REV INPUT CLU HSG THR (TO STATOR SHF) (2.21-2.31MM) (4.158) (AC-DELCO #8642069)	99-02	Y (M30)	1	8642069
	3-A18	4.189	WASHER, REV INPUT CLU HSG THR (TO STATOR SHF) (2.38-2.48MM) (4.158) (AC-DELCO #8642070)	99-02	Y (M30)	1	8642070
	3-A18	4.189	WASHER, REV INPUT CLU HSG THR (TO STATOR SHF) (2.55-2.65MM) (4.158) (AC-DELCO #8642071)	99-02	Y (M30)	1	8642071
	3-A18	4.189	WASHER, REV INPUT CLU HSG THR (TO STATOR SHF) (2.72-2.82MM) (4.158) (AC-DELCO #8642072)	99-02	Y (M30)	1	8642072
	3-A18	4.189	WASHER, REV INPUT CLU HSG THR (TO STATOR SHF) (2.89-2.99MM) (4.158) (AC-DELCO #8642073)	99-02	Y (M30)	1	8642073
	3-A18	4.189	WASHER, REV INPUT CLU HSG THR (TO STATOR SHF) (3.06-3.16MM) (4.158) (AC-DELCO #8642074)	99-02	Y (M30)	1	8642074
602.	3-A24	4.251	BAND, 2-4 (AC-DELCO #24201131)	99-02	Y (M30)	1	24201131
603.	3-A17	4.180	BUSHING, REV INPUT CLU HSG FRT (ALSO PART OF 605) (AC-DELCO #8642905)	99-02	Y (M30)	1	8642905
605.	3-A16	4.169	HOUSING, REV INPUT CLU (INCL 603, 606) (AC-DELCO #8681295)	99-02	Y (M30)	1	8681295
606.	3-A16	4.169	BUSHING, DIR CLU HSG RR (ALSO PART OF 605) (AC-DELCO #6628917)	99-02	Y (M30)	1	8628917
607.	3-A15	4.166	PISTON, REV INPUT CLU (.095 HOLE) (AC-DELCO #8667841)	99-02	Y (M30)	1	8667841
608.	3-A15	4.166	SEAL KIT, REV INPUT CLU (INCLS SEALS) (*KIT2, KIT3) (AC-DELCO #8657922)	99-02	Y (M30)	1	8657922
609.	3-A15	4.164	SPRING, REV INPUT CLU (AC-DELCO #8647284)	99-02	Y (M30)	1	8647284

cardiagn.com

610.	3-A15	4.164	RING, REV INPUT CLU SPR RET (*KIT4) (AC-DELCO #8628059) .	99-02	Y (M30)	1	8628059
611.	3-A12	4.163	PLATE, REV INPUT CLU (WAVED) (AC-DELCO #8663074)	99-02	Y (M30)	1	8663074
612.	3-A12	4.163	PLATE. REV INPUT CLU (ILLUSTRATED AS 612B) (153MM DIA) (*KIT8) (AC-DELCO #8673605)	99-02	Y (M30)	4	8673605
	3-A12	4.163	PLATE, REV INPUT CLU (ILLUSTRATED AS 612A) (W/ HOLES IN TURB PLATES) (AC-DELCO #24205267)	99- 02	Y (M30)	4	24205267
613.	3-A12	4.163	PLATE, REV INPUT CLU BKG (7.25-7.41MM) (AC-DELCO #8682863)	99-01	Y (M30)	1	8682863
	3-A12	4.163	PLATE, REV INPUT CLU BKG (6.52-6.68MM) (AC-DELCO #8682864)	99-01	Y (M30)	1	8682864
	3-A12	4.163	PLATE, REV INPUT CLU BKG (5.79-5.95MM) (AC-DELCO #8682865)	99-01	Y (M30)	1	8682865
	3-A12	4.163	PLATE, REV INPUT CLU BKG (5.787-5.947MM) (AC-DELCO #24212463)	02	Y (M30)	1	24212463
	3-A12	4.163	PLATE, REV INPUT CLU BKG (6.518-6.678MM) (AC-DELCO #24212464)	02	Y (M30)	1	24212464
	3-A12	4.163	PLATE, REV INPUT CLU BKG (7.409-7.249MM) (AC-DELCO #24212465)	02	Y (M30)	1	24212465
614.	3-A15	4.164	RING, REV INPUT CLU BKG PLT RET (YELLOW) (AC-DELCO #8667022)	99-02	Y (M30)	1	8667022
615.	3-A12	4.162	BEARING, REV INPUT CLU HSG THR (STATOR SHFT) (TO SEL WASHER) (AC-DELCO #8642066)	99-02	Y (M30)	1	8642066
616.	3-A18	4.189	WASHER, REV INPUT CLU HSG THR (4.226) (AC-DELCO #08642041)	99-02	Y (M30)	1	8642041
	3-A18	4.189	WASHER, REV INPUT CLU HSG THR (TO STATOR SHF) (1.87-1.97MM) (4.158) (AC-DELCO #8642067)	99-02	Y (M30)	1	8642067
	3-A18	4.189	WASHER, REV INPUT CLU HSG THR (TO STATOR SHF) (2.04-2.14MM) (4.158) (AC-DELCO #8642068)	99-02	Y (M30)	1	8642068
	3-A18	4.189	WASHER, REV INPUT CLU HSG THR (TO STATOR SHF) (2.21-2.31MM) (4.158) (AC-DELCO #8642069)	99-02	Y (M30)	1	8642069
	3-A18	4.189	WASHER, REV INPUT CLU HSG THR (TO STATOR SHF) (2.38-2.48MM) (4.158) (AC-DELCO #8642070)	99-02	Y (M30)	1	8642070

cardiagn.com

	3-A18	4.189	WASHER, REV INPUT CLU HSG THR (TO STATOR SHF) (2.55-2.65MM) (4.158) (AC-DELCO #8642071)	99-02	Y (M30)	1	8642071
	3-A18	4.189	WASHER, REV INPUT CLU HSG THR (TO STATOR SHF) (2.72-2.82MM) (4.158) (AC-DELCO #8642072)	99-02	Y (M30)	1	8642072
	3-A18	4.189	WASHER, REV INPUT CLU HSG THR (TO STATOR SHF) (2.89-2.99MM) (4.158) (AC-DELCO #8642073)	99-02	Y (M30)	1	8642073
	3-A18	4.189	WASHER, REV INPUT CLU HSG THR (TO STATOR SHF) (3.06-3.16MM) (4.158) (AC-DELCO #8642074)	99-02	Y (M30)	1	8642074
617.	3-A10	4.123	VALVE, TURB SHF BALL CHK (PART OF 621) (AC-DELCO #8685839)	99-02	Y (M30)	1	8685839
618.	3-A10	4.123	SEAL, TURB SHF (O RING) (*KIT2, KIT3) (AC-DELCO #8630049)	99-02	Y (M30)	1	8630049
619.	3-A10	4.123	RING, INPUT SHF FLUID SEAL (TEFLON) (TEFLON) (*KIT2, KIT3) (AC-DELCO #8667035)	99-02	Y (M30)	4	8667035
620.	3-A10	4.123	VALVE, 3-4 CLU HSG BALL CHK (ALSO PART OF 621) (AC-DELCO #24208262)	99-02	Y (M30)	1	24208262
621.	3-A12	4.158	HOUSING, 3-4 CLU (W/INPUT SHF) (INCL 617, 620) (AC-DELCO #24200901)	99-02	Y (M30)	1	24200901
622.		N.S.	SEAL, O-RING INPUT TO FWD HSG (*KIT1, KIT2, KIT3)		.....		
623.	3-A15	4.166	PISTON, 3-4 CLU (AC-DELCO #24200290)	99-02	Y (M30)	1	24200290
625.	3-A16	4.167	RING, 3-4 CLU APPL (1 BAR) (*KIT7) (AC-DELCO #8685043) .	99-02	Y (M30)	1	8685043
626.	3-A16	4.167	SPRING, 3-4 CLU (105.12MM O.D.) (AC-DELCO #8685244) ...	99-02	Y (M30)	1	8685244
627.	3-A10	4.123	VALVE, FWD CLU HSG BALL CHK (ALSO PART OF 628) (SINGLE ORIFICE) (TALL & NARROW) (4.226) (AC-DELCO #8628732)	99-00	Y (M30)	2	8628732
	3-A10	4.123	VALVE, FWD CLU HSG BALL CHK (ALSO PART OF 628) (SHORT & WIDE) (AC-DELCO #24205181)	99-02	Y (M30)	1	24205181
628.	3 A16	4.169	HOUSING, FWD CLU (INCL 627) (INCLS HOUSINGS & VALVE) (AC-DELCO #24205298)	99-02	Y (M30)	1	24205298
630.	3-A15	4.166	PISTON, FWD CLU (*KIT11) (AC-DELCO #24205272)	99-02	Y (M30)	1	24205272
632.	3-A15	4.166	PISTON, OVERRUN CLU (INCL 633) (STEEL W/ INTEGRAL SEAL) (*KIT11) (AC-DELCO #24205273)	99-02	Y (M30)	1	24205273

cardiagn.com

633.		8.899	BALL, SPECIAL, 3/16 STEEL (ALSO PART OF 632) (AC-DELCO #7002117)	99-02		AR	7002117
634.	3-A12	4.163	SPRING, OVERRUN CLU (*KIT11) (AC-DELCO #24206085)	99-02	Y (M30)	1	24206085
635.		8.934	RING, EXT SNAP FITS M38 DIA SHT .PL (*KIT4)	99-02		AR	11500692
636.	3-A17	4.176	SEAL, OUTPUT SHF (*KIT1, KIT2, KIT3) (AC-DELCO #24207010)	99-02	Y (M30)	1	24207010
637.	3-A12	4.159	BEARING, INPUT SUN GR THR (AC-DELCO #8642162)	99-02	Y (M30)	1	8642162
638.	3-A17	4.180	RING, OVERRUN CLU HUB RET (SNAP) (*KIT4, KIT11) (AC-DELCO #8647083)	99-02	Y (M30)	1	8647083
639.		N.S.	HUB, OVERRUN CLU (*KIT11)				
640.		N.S.	GEAR, INPUT SUN (*KIT11)				
642.		N.S.	SPRAG, FWD CLU (*KIT11)				
643.		N.S.	RETAINER (*KIT11)				
644.		N.S.	RACE, FWD CLU SPRAG OTR (*KIT11)				
645.	3-A12	4.163	PLATE, OVERRUN CLU (ILLUSTRATED AS 645A, (1.93-2.13 THK) (GROOVED) (AC-DELCO #24210766)	99-02	Y (M30)	AR	24210766
	3-A12	4.163	PLATE, OVERRUN CLU (ILLUSTRATED AS 645B) (2.34MM THK) (FLAT STEEL) (AC-DELCO #8642154)	99-02	Y (M30)	2	8642154
646.	3-A12	4.163	PLATE, FWD CLU APPLY (AC-DELCO #8682866)	99-00	Y (M30)	1	8682866
	3-A12	4.163	PLATE, FWD CLU APPLY (AC-DELCO #24212462)	01-02	Y (M30)	1	24212462
648.	3-A12	4.163	PLATE, FWD CLU (WAVED) (AC-DELCO #8647058)	99-02	Y (M30)	1	8647058
649.	3-A12	4.163	PLATE, FWD CLU (ILLUSTRATED AS 649A) (FIBER) (*KIT3, KIT5, KIT8) (AC-DELCO #24210765)	99-02	Y (M30)	5	24210765
	3-A12	4.163	PLATE, FWD CLU (ILLUSTRATED AS 649B) (STEEL) (*KIT3, KIT5, KIT8) (AC-DELCO #8654325)	99-02	Y (M30)	5	8654325
650.	3-A12	4.163	PLATE, FWD CLU BKG (6.92-7.07MM) (ID A) (AC-DELCO #8682867)	99-00	Y (M30)	1	8682867
	3-A12	4.163	PLATE, FWD CLU BKG (8.73-9.03MM) (ID B) (AC-DELCO #8682868)	99-00	Y (M30)	1	8682868
	3-A12	4.163	PLATE, FWD CLU BKG (4.56-4.71MM) (ID E) (AC-DELCO #8682871)	99-00	Y (M30)	1	8682871
	3-A12	4.163	PLATE, FWD CLU BKG (7.55MM-7.85MM) (AC-DELCO #24212467)	99-02	Y (M30)	1	24212467
	3-A12	4.163	PLATE, FWD CLU BKG (6.96MM-7.26MM) (AC-DELCO #24212466)	01-02	Y (M30)	1	24212466

cardiagn.com

	3-A12	4.163	PLATE, FWD CLU BKG (8.14MM-8.44MM) (AC-DELCO #24212468)	99-02	Y (M30)	1	24212468
	3-A12	4.163	PLATE, FWD CLU BKG (8.73MM-9.03MM) (AC-DELCO #24212469)	01-02	Y (M30)	1	24212469
	3-A12	4.163	PLATE, FWD CLU BKG (9.32MM-9.62MM) (AC-DELCO #24212470)	01-02	Y (M30)	1	24212470
651.	3-A12	4.163	RING, FWD CLU BKG PLT RET (AC-DELCO #8642170)	99-02	Y (M30)	1	8642170
653.	3-A12	4.163	PLATE, 3-4 CLU APPLY (*KIT7) (AC-DELCO #8685044)	99-02	Y (M30)	1	8685044
654.	3-A12	4.163	PLATE KIT, CLU (3-4 CLUTCH STEEL & FIBER) (*KIT3, KIT7, KIT8) (AC-DELCO #24209563)	99-00	Y (M30)	1	24209563
655.	3-A12	4.163	PLATE, 3-4 CLU BKG (ID BY 3 DIMPLES) (*KIT7) (AC-DELCO #8685046)	99-00	Y (M30)	1	8685046
	3-A12	4.163	PLATE, 3-4 CLU BKG (4.79-4.99MM THK) (*KIT7) (AC-DELCO #24211896)	99-00	Y (M30)	1	24211896
	3-A12	4.163	PLATE, 3-4 CLU BKG (3.90MM-4.10MM) (*KIT7) (AC-DELCO #24212459)	99-02	Y (M30)	1	24212459
	3-A12	4.163	PLATE, 3-4 CLU BKG (4.79-4.99MM) (*KIT7) (AC-DELCO #24212460)	01-02	Y (M30)	1	24212460
	3-A12	4.163	PLATE, 3-4 CLU BKG (5.68MM-5.88MM) (*KIT7) (AC-DELCO #24212461)	01-02	Y (M30)	1	24212461
656.	3-A12	4.163	RING, 3-4 CLU BKG PLT RET (AC-DELCO #8663636)	99-02	Y (M30)	1	8663636
657.	3-A28	4.319	BUSHING, OUTPUT SHF (FRT) (ALSO PART OF 658) (FRT & RR) (*KIT11) (4.159) (AC-DELCO #8642181)	99-02	Y (M30)	1	8642181
659.	3-A28	4.319	BUSHING, OUTPUT SHF (REAR) (ALSO PART OF 658) (FRT & RR) (*KIT11) (4.159) (AC-DELCO #8642181)	99-02	Y (M30)	1	8642181
661.	3-A17	4.176	RING, OUTPUT SHF RET (TO INPUT CARR) (*KIT2, KIT3, KIT4) (AC-DELCO #8654141)	99-02	Y (M30)	1	8654141
662.	3-A16	4.175	CARRIER, INPUT (COMPL) (AC-DELCO #24212177)	99-02	Y (M30)	1	24212177
663.	3-A12	4.159	BEARING, INT REACTION GR SUPT THR (AC- DELCO #24217327)	99-00	Y (M30)	1	24217327
	3-A12	4.159	BEARING, INT REACTION GR SUPT THR (*KIT3) (AC-DELCO #24217327)	01-02	Y (M30)	1	24217327
664.	3-A12	4.158	GEAR, INPUT INTL (AC-DELCO #8663639)	99-02	Y (M30)	1	8663639
665.	3-A17	4.176	BUSHING, REACTION CARR SHF FRT (ALSO PART OF 666) (*KIT3) (AC-DELCO #8642908)	99-02	Y (M30)	1	8642908

cardiagn.com

666.	3-A16	4.175	SHAFT, REACTION CARR (INCL 665, 667) (AC-DELCO #8681518)	99-00	Y (M30)	1	8681518
		N.S.	SHAFT, REACTION CARR (INCL 665, 667) (*KIT3)	01-02			
667.	3-A17	4.176	BUSHING, REACTION CARR SHF RR (ALSO PART OF 666) (*KIT3) (AC-DELCO #8642907)	99-02	Y (M30)	1	8642907
668.	3-A17	4.176	RING, REACTION CARR SHF RET (TO INT GR) (AC-DELCO #8642201)	99-02	Y (M30)	1	8642201
669.	3-A17	4.176	WASHER, REACTION CARR SHF THR (08642202 TO BE USED ONLY WITH 08683439) (AC-DELCO #8642202)	99-00	Y (M30)	1	8642202
	3-A17	4.176	WASHER, REACTION CARR SHF THR (*KIT3) (4.159) (AC-DELCO #24217328)	01-02	Y (M30)	1	24217328
670.	3-A16	4.175	SHELL, REACTION SUN GR (AC-DELCO #8683439)	99-00	Y (M30)	1	8683439
	3-A16	4.175	SHELL, REACTION SUN GR (*KIT3) (AC-DELCO #24217145)	01-02	Y (M30)	1	24217145
671.	3-A12	4.159	RING, REACTION SUN GR RET (AC-DELCO #8681553)	99-02	Y (M30)	1	8681553
672.	3-A17	4.176	BUSHING, REACTION SUN GR (ALSO PART OF 673) (AC-DELCO #8642909)	99-02	Y (M30)	1	8642909
673.	3-A12	4.159	GEAR, REACTION SUN (INCL 672) (INCLS BUSH & GEAR) (INDIVIDUAL COMPONENTS NOT SOLD SEPARATELY) (AC-DELCO #8642204)	99-02	Y (M30)	1	8642204
674.	3-A12	4.159	WASHER, REACTION SUN GR SHELL THR (4.176) (AC-DELCO #8642331)	99-02	Y (M30)	1	8642331
675.	3-A17	4.180	RACE, LOW CLU RLR INR (OVERRUN CLU) (PART OF 678) (AC-DELCO #8673300)	99-02	Y (M30)	1	8673300
676.	3-A17	4.180	RING, LOW & REV CLU SUPT RET (AC-DELCO #24200278)	99-02	Y (M30)	1	24200278
677.	3-A17	4.180	RING, LOW CLU RLR RET (O/RUN) (PART OF 678) (AC-DELCO #6261051)	99-02	Y (M30)	2	6261051
678.	3-A15	4.166	SUPPORT, LOW & REV CLU (INCL 675, 677, 679) (*KIT6) (4.180) (AC-DELCO #8681727)	99-02	Y (M30)	1	8681727
679.		N.S.	SUPPORT, LO & REV CLU (PART OF 678) (*KIT6)				
680.	3-A17	4.180	SPRING, LOW & REV CLU SUPT (RET) (AC-DELCO #6261415)	99-02	Y (M30)	1	6261415
681.	3-A16	4.175	CARRIER, REACTION (W/DEFLECTOR) (INCL 697) (AC-DELCO #8654200)	99-02	Y (M30)	1	8654200
682.	3-A12	4.163	PLATE, LOW & REV CLU (WAVED) (ILLUSTRATED AS 682A) (*KIT3, KIT6) (AC-DELCO #8676362)	99-02	Y (M30)	1	8676362

cardiagn.com

	3-A12	4.163	PLATE, LOW & REV CLU (ID BLANK) (ILLUSTRATED AS 682B) (1.829MM) (HAS HOLES IN TURB PLATES) (STEEL) (*KIT3, KIT6) (AC-DELCO #24205268)	99-02	Y (M30)	4	24205268
	3-A12	4.163	PLATE, LOW & REV CLU (ID 4, 8, 0) (ILLUSTRATED AS 682B) (1.314MM) (SELECTIVE) (*KIT3, KIT6) (AC-DELCO #8680440) ...	99-02	Y (M30)	1	8680440
	3-A12	4.163	PLATE, LOW & REV CLU (ID 4, 8, 0) (ILLUSTRATED AS 682B) (2.344MM) (HAS HOLES IN TURB PLATES) (*KIT3, KIT6) (AC-DELCO #24205270)	99-02	Y (M30)	1	24205270
	3-A12	4.163	PLATE, LOW & REV CLU (FLAT FACED) (ILLUSTRATED AS 682C) (NON-SEGMENTED COMPLETE SET OF 5) (*KIT3, KIT6, KIT8) (AC-DELCO #8684069)	99-01	Y (M30)	5	8684089
	3-A12	4.163	PLATE, LOW & REV CLU (FLAT FACED) (ILLUSTRATED AS 682C) (SEGMENTED-COMPLETE SET OF 5) (*KIT3, KIT6, KIT8) (AC-DELCO #24216946)	02	Y (M30)	5	24216946
	3-A12	4.163	PLATE, LOW & REV CLU (ILLUSTRATED AS 682D) (1.829MM) (HAS HOLES IN TURB PLATES) (STEEL) (*KIT3, KIT6) (AC-DELCO #24205268)	99-02	Y (M30)	1	24205268
683.	3-A12	4.159	BEARING, REACTION CARR THR (4.176) (AC-DELCO #8642215)	99-02	Y (M30)	1	8642215
	3-A12	4.159	BEARING, DIFF CARR SUN GR THR (AC-DELCO #8646254) ...	99	Y (M30)	1	8646254
684.	3-A12	4.158	GEAR, REACTION INTL (AC-DELCO #8667055)	99-02	Y (M30)	1	8667055
685.	3-A16	4.175	SUPPORT, REACTION INTL GR (AC-DELCO #8681491)	99-02	Y (M30)	1	8681491
686.	3-A17	4.176	RING, INT REACTION GR SUPT RET (AC-DELCO #8642220) ...	99-02	Y (M30)	1	8642220
687.	3-A16	4.175	SHAFT, OUTPUT (AC-DELCO #24207079)	99-02	Y (M30)	1	24207079
688.	3-A20	4.224	ORIFICE, LUB FLUID (4.3MM DIA) (AC-DELCO #8663707) ...	99-02	Y (M30)	2	8663707
690.		N.S.	SLEEVE, OUTPUT SHF (NOT REQD)		.....		
691.		N.S.	SEAL, OUTPUT SHF (NOT REQ'D) (*KIT2, KIT3)		.....		
692.	3-A12	4.159	BEARING, REACTION CARR THR (AC-DELCO #24217327) ..	99-02	Y (M30)	1	24217327
693.	3-A15	4.164	RING, LOW & REV CLU SPR RET RET (*KIT4, KIT6) (4.159) (AC-DELCO #8647337)	99-02	Y (M30)	1	8647337
694.	3-A15	4.164	SPRING, LOW & REV CLU (AC-DELCO #8642227)	99-02	Y (M30)	1	8642227
695.	3-A15	4.166	PISTON, LOW & REV CLU (*KIT6) (AC-DELCO #8685549) .	99-02	Y (M30)	1	8685549

cardiagn.com

696.	3-A18	4.189	SEAL KIT, LOW & REV CLU (INCLS INR, OTR & INTER SEALS) (*KIT2, KIT3, KIT6) (4.166) (AC-DELCO #8648987) .	99-02	Y (M30)	1	8648987
697.		N.S.	DEFLECTOR, OIL (PART OF 681)				
698.	3-A20	4.224	ORIFICE, LUB FLUID (4.3MM DIA) (AC-DELCO #8663707) ...	99-02	Y (M30)	2	8663707
699.		N.S.	WHEEL, VEH SPD SEN RELUCTOR (PART OF FINAL DRIVE ASSY)				

SERVICE KITS

1.	3-A15	4.166	SEAL KIT, 3-4 CLU PSTN (FOA) (INCL 622, 624, 629, 631, 636) (AC-DELCO #8642919)	99-02	Y (M30)	1	8642919
2.	3-A7	4.005	GASKET KIT, A/TRNS SERV (INCL 608, 618-19, 622, 624, 629, 631, 636, 661, 691, 696) (W/O PLATES OR PISTONS) (AC-DELCO #24201803)	99-01	Y (M30)	1	24201803
	3-A7	4.005	GASKET KIT, A/TRNS SERV (INCL 608, 618-19, 622, 624, 629, 631, 636, 661, 691, 696) (AC-DELCO #24221347)	02	Y (M30)	1	24221347
3.	3-A12	4.159	SHELL KIT, REACTION SUN GR (INCLS 663, 666, 669, 670)	01-02	Y (M30)	1	24221190
4.	3-A7	4.005	RING KIT, RET (INCL 610, 635, 638, 661, 693) (AC-DELCO #8642910)	99-02	Y (M30)	1	8642910
5.	3-A12	4.163	PLATE KIT, FWD CLU (INCL 649, 702) (INCLS INST SHEET & PLATES) (AC-DELCO #8647991)	99-02	Y (M30)	AR	8647991
6.	3-A12	4.163	PLATE KIT, LOW & REV CLU (W/SUPT) (W/PSTN) (INCL ITEMS 678-9, 682, 693, 695-6) (STEEL PLATES) (AC-DELCO #8687996)	99-02	Y (M30)	1	8687996
7.	3-A12	4.163	PLATE KIT, 3-4 CLU (INCL 600, 625, 653, 654, 655B) (AC-DELCO #24209032)	99-00	Y (M30)	1	24209032
8.	3-A12	4.163	PLATE KIT, CLU (INCL 612A, 645A, 649, 654A, 682C) (HAS FIBER PLTS) (AC-DELCO #24209031)	99-01	Y (M30)	1	24209031
	3-A12	4.163	PLATE KIT, CLU (INCL 612A, 645A, 649, 654A, 682C) (COMPL KIT INCLUDING 3-4) (AC-DELCO #24209562)	02	Y (M30)	1	24209562
10.	3-A15	4.166	PISTON KIT, FWD CLU & OVERRUN CLU (INCL 630, 632, 634) (AC-DELCO #24209542) ..	99-02	Y (M30)	1	24209542
11.	3-A15	4.164	CLUTCH, FWD RLR (INCL 638, 639, 640, 642, 643, 644, 657) (REG SPD, INCLS INPUT SUN GEAR) (AC - DELCO #24210961)	99-02	Y (M30)	1	24210961

cardiagn.com

RPO DEFINITIONS
M30 – TRANSMISSION,AUTOMATIC 4 SPEED,4L60E,ELECTRONIC

cardiagn.com

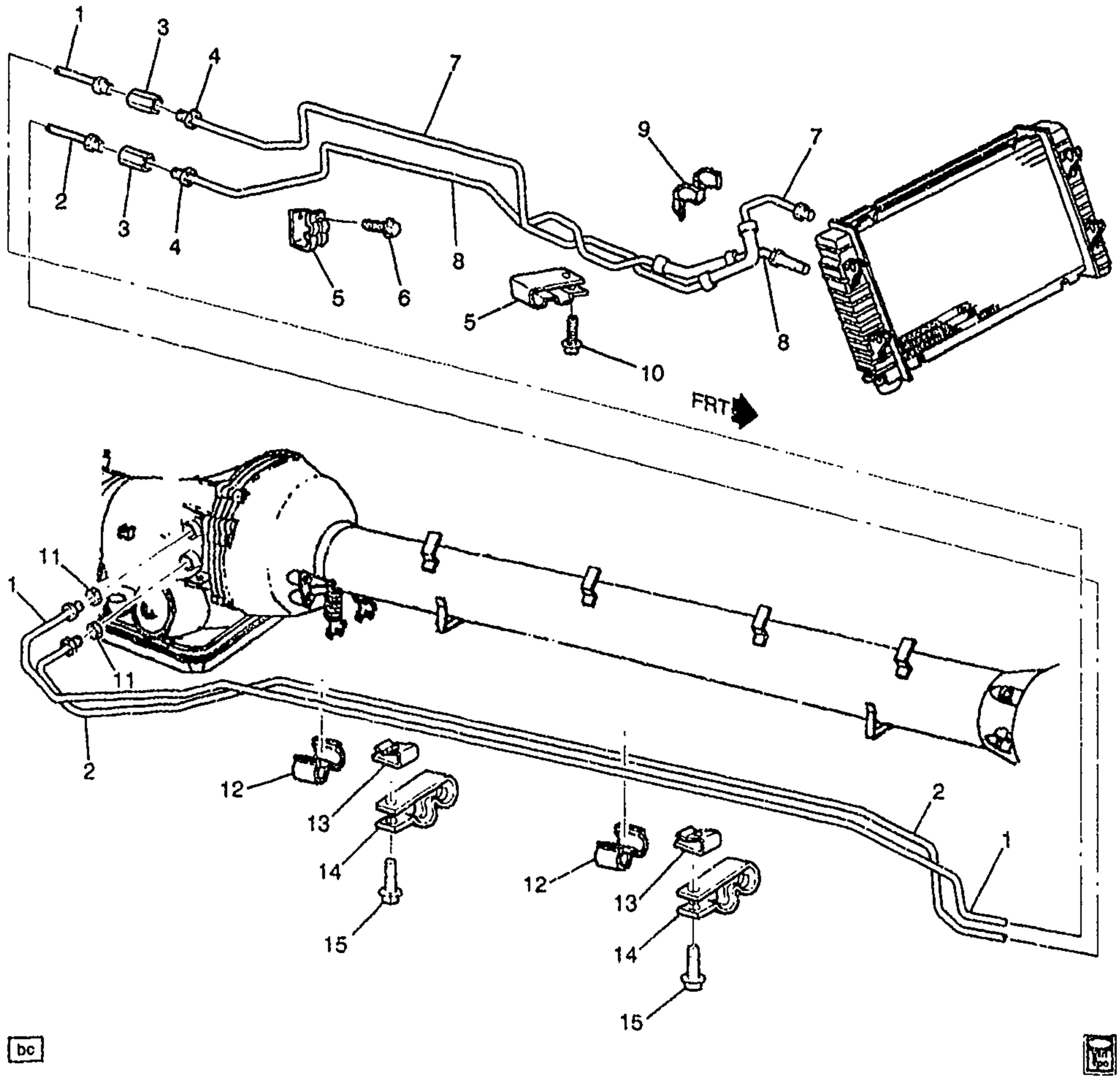

1Y04-037

1997-2000 Y FILLER TUBE & OIL COOLER PIPES

1.	8.964	TUBING, STEEL, 3/8" OD, 25' ROLL (TRANS FLUID CLR UPR PIPE) (T/W 442338 CONN & 10269715 FITTING)	97-00	2	3750950
2.	8.964	TUBING, STEEL, 3/8" OD, 25' ROLL (TRANS FLUID CLR LWR PIPE) (T/W 442338 CONN & 10269715 FITTING)	97-00	AR	3750950
3.	8.963	UNION, INV FLD TUBE .625-18 PL (TRANS FLUID CLR PIPE)	97-00	1	442338

cardiagn.com

							1Y04-037
4.		8.963	NUT, 5/8-18 UNF (TRANS OIL CLR PIPE FRT UPR/LWR) (PART OF 7, 8)	97-00		1	10269715
5.	3-A11	4.128	CLIP, TRANS FLUID CLR PIPE (AT OIL PAN) (POSN #1) (STEEL) (6.672)	97-99	Y	2	10104507
	3-A11	4.128	CLIP, TRANS FLUID CLR PIPE (AT OIL PAN) (POSN #1) (VINYL DIPPED) (6.602)	00	Y	2	26077839
6.		8.900	BOLT, HEX W/CON WA, M6X1X20 (AT OIL PAN)	97-00		1	11514623
7.	3-A11	4.128	PIPE, TRANS FLUID CLR UPR (FRT) (INCLS 4)	97-00	Y (M30)	1	10229483
8.	3-A11	4.128	PIPE, TRANS FLUID CLR LWR (FRT) (FRT) (INCLS 4)	97-00	Y (M30)	1	10425292
9.	3-A11	4.128	CLIP, TRANS FLUID CLR PIPE (AT OIL PAN) (POSN #2)	97-00	Y	1	10182465
10.		8.900	BOLT, M6X1X16, 13.5 THD, 14.2 OD, 9.8, SN-ZN (AT OIL PAN)	97-00		1	11517517
11.		8.963	NUT, 5/8-18 UNF (TRANS FLUID CLR)	97-00		1	10269715
12.	3-A11	4.128	CLIP, TRANS FLUID AUX CLR PIPE (TORQUE TUBE) (POSN #2)	97-00	Y	2	10182465
13.		8.921	NUT-U SHAPE (M6X1, 1060 PEOR) MULIT-THREAD SPRING (TRANS OIL CLR PIPE BRKT) (AT TORQUE TUBE)	97-00		2	11518121
14.	3-A11	4.128	CLIP, TRANS FLUID AUX CLR PIPE (TORQUE TUBE) (POSN #1) (STEEL) (6.672)	97-99	Y	2	10104507
	3-A11	4.128	CLIP, TRANS FLUID AUX CLR PIPE (TORQUE TUBE) (POSN #1) (VINYL DIPPED) (6.602)	00	Y	2	26077839
15.		8.900	BOLT, M6X1X12, 10 THD, 11.6 OD, 9.8 GM500-M, POR, MACH (TRANS FLUID CLR PIPE BRKT) (AC-DELCO #11514149)	97-00		2	11514149

HPO DEFINITIONS
M30 – TRANSMISSION,AUTOMATIC 4 SPEED,4L60E,ELECTRONIC

cardiagn.com

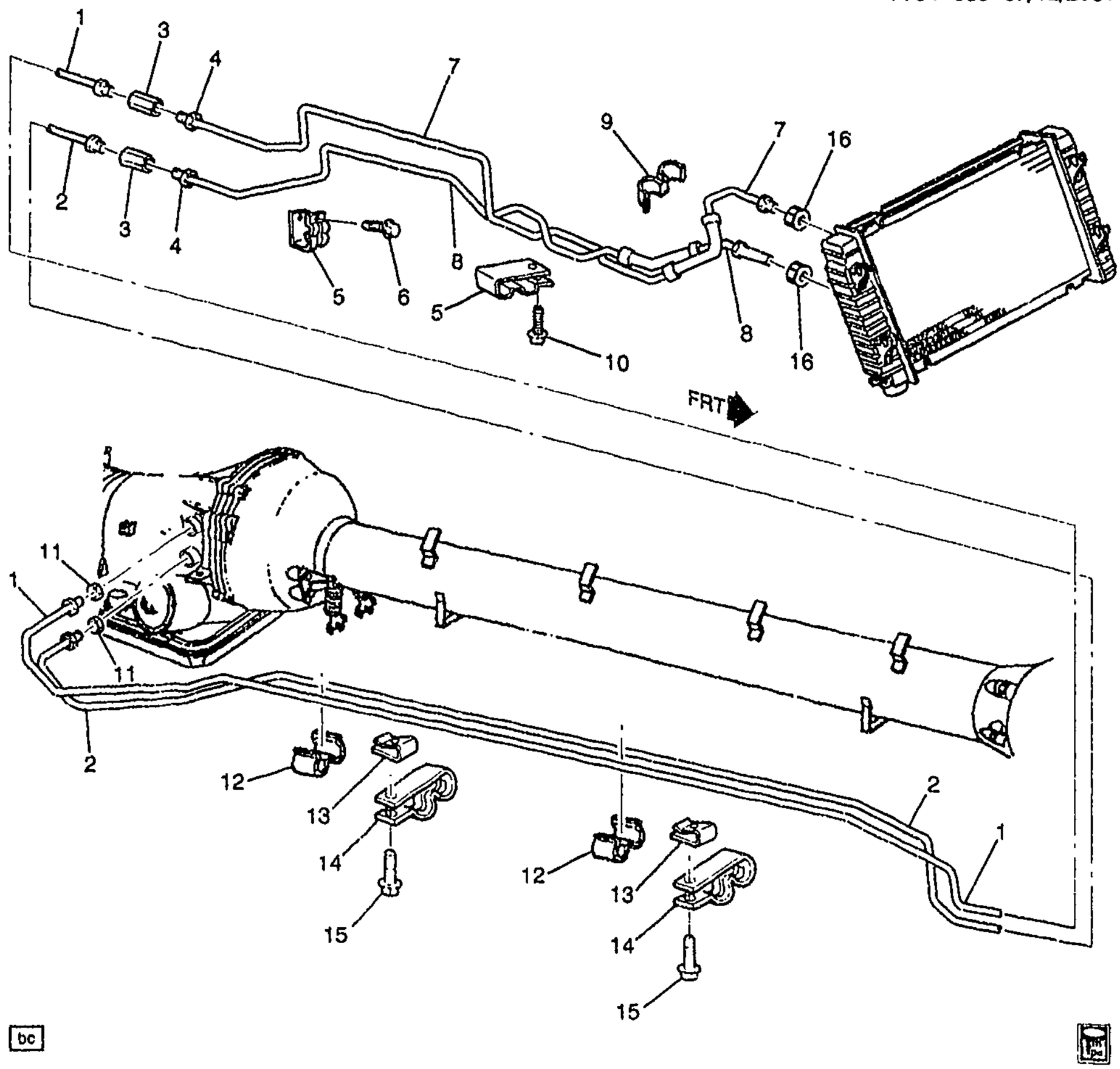

1Y04-039

2001-2002 Y FILLER TUBE & OIL COOLER PIPES

1.	8.964	TUBING, STEEL, 3/8" OD, 25' ROLL (TRANS FLUID CLR UPR PIPE) (T/W 442338 CONN & 10269715 FITTING)	01-02	2	3750950
2.	8.964	TUBING, STEEL, 3/8" OD, 25' ROLL (TRANS FLUID CLR LWR PIPE) (T/W 442338 CONN & 10269715 FITTING)	01-02	AR	3750950
3.	8.963	UNION, INV FLD TUBE .625-18 PL (TRANS FLUID CLR PIPE)	01-02	1	442338

cardiagn.com

							1Y04-039
4.		8.963	NUT, 5/8-18 UNF (TRANS OIL CLR PIPE FRT UPR/LWR) (PART OF 7, 8)	01-02		1	10269715
5.	3-A11	4.128	CLIP, TRANS FLUID CLR PIPE (AT OIL PAN) (POSN #1) (VINYL DIPPED) (6.602)	01-02	Y	2	26077839
6.		8.900	BOLT, HEX W/CON WA, M6X1X20 (AT OIL PAN)	01-02		1	11514623
7.		8.964	TUBING, STEEL, 3/8" OD, 25' ROLL (INCLS 4, 16)	01-02		AR	3750950
8.		8.964	TUBING, STEEL, 3/8" OD, 25' ROLL (FRT) (INCLS 4, 16)	01-02		AR	3750950
9.	3-A11	4.128	CLIP, TRANS FLUID CLR PIPE (AT OIL PAN) (POSN #2)	01-02	Y	1	10182465
10.		8.900	BOLT, M6X1X16, 13.5 THD, 14.2 OD, 9.8, SN-ZN (AT OIL PAN)	01-02		1	11517517
11.		8.963	NUT, 5/8-18 UNF (TRANS FLUID CLR)	01-02		1	10269715
12.	3-A11	4.128	CLIP, TRANS FLUID AUX CLR PIPE (TORQUE TUBE) (POSN #2)	01-02	Y	2	10182465
13.		8.921	NUT-U SHAPE (M6X1, 1060 PEOR) MULIT-THREAD SPRING (TRANS OIL CLR PIPE BRKT) (AT TORQUE TUBE)	01-02		2	11518121
14.	3-A11	4.128	CLIP, TRANS FLUID AUX CLR PIPE (TORQUE TUBE) (POSN #1) (VINYL DIPPED) (6.602)	00-02	Y	2	26077839
15.		8.900	BOLT, M6X1X12, 10 THD, 11.6 OD, 9.8 GM500-M, POR, MACH (TRANS FLUID CLR PIPE BRKT) (AC-DELCO #11514149)	01-02		2	11514149
16.	3-A11	4.128	CAP, TRANS FLUID CLR PIPE CONN (PART OF 7, 8)	01-02	Y	2	10301648

cardiagn.com

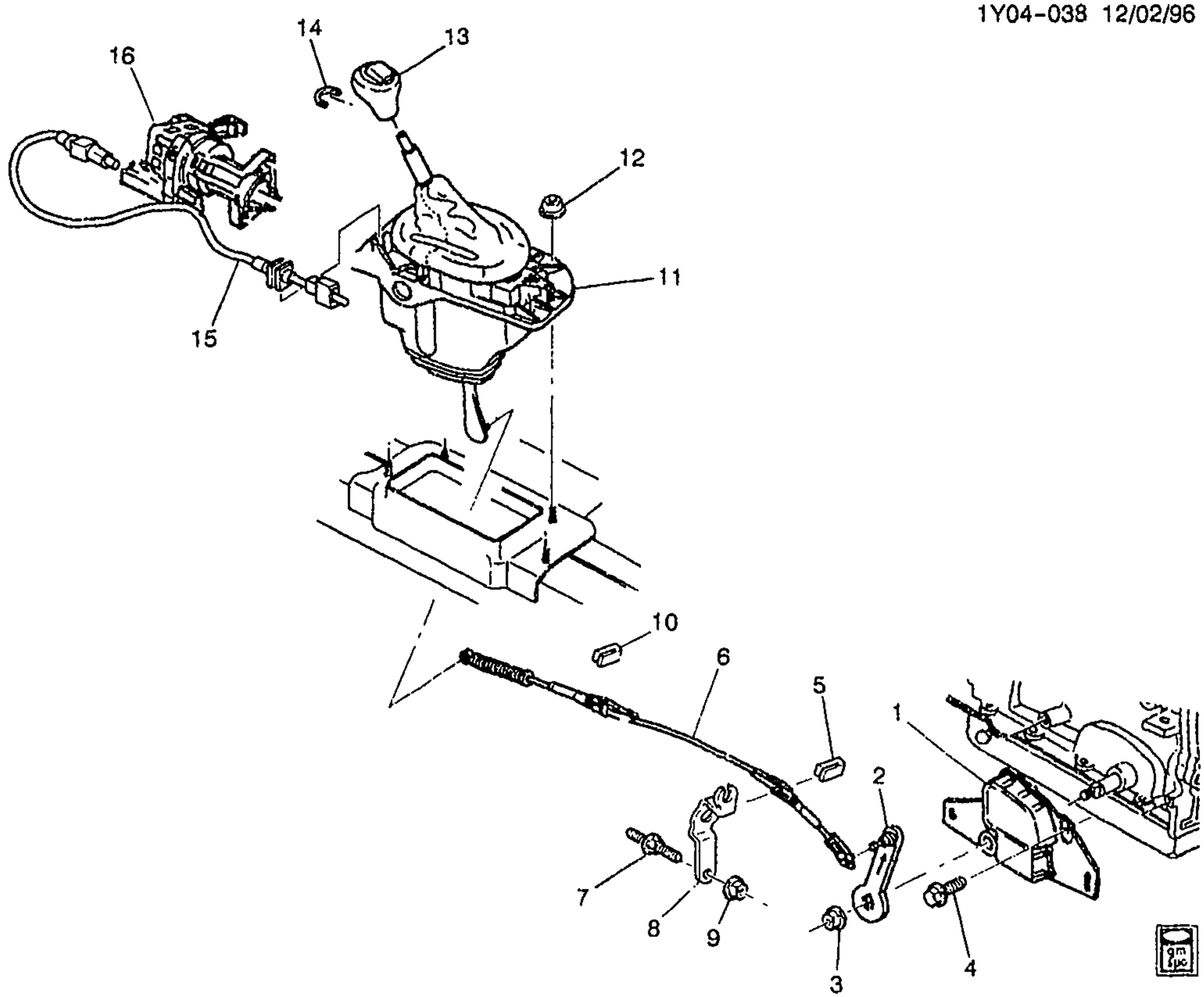

1Y04-038

1997-2002 Y SHIFT CONTROL/AUTOMATIC TRANSMISSION FLOOR(M30)

1.	3-N21	2.698	SWITCH, PARK/NEU POSN & B/U LP (4.054) (AC-DELCO #D2285A)	97-02	Y (M30)	1 12450016
	3-A9	4.054	SWITCH, PARK/NEU POSN & B/U LP (TRANS MOUNTED) (AC-DELCO #D2285A)	97-02	Y (M30)	1 12450016
2.	3-A8	4.045	LEVER, A/TRNS RANGE SEL	97-02	Y (M30)	1 12551458
3.		8.915	NUT, M10X1.5 15MM SOCKET (RANGE SEL LVR)	97-02	.....	1 11514603
4.		8.900	BOLT, HEX W/CON WA, M8X1.25X16, 9.8, PZOR, 17.0-OD, W/DOG PT, TT WASH (PARK/NEU POSN & B/U LP SW)	97-02	.....	2 11509640
5.	3-A8	4.047	RETAINER, A/TRNS RANGE SEL LVR CBL (USED ON TRANS END)	97-01	Y (M30)	2 10217245

cardiagn.com

							1Y04-038
	3-A8	4.047	RETAINER, A/TRNS RANGE SEL LVR CBL (AT FRT OF DASH) (USED ON TRANS END)	01-02	Y07-67 (AG2, AQ9, IL3)	1	22654286
	3-A8	4.047	RETAINER, A/TRNS RANGE SEL LVR CBL (USED ON TRANS END & SHIFTER END) (USED ON TRANS END)	02	Y (M30)	2	10217245
6.	3-A8	4.047	CABLE, A/TRNS RANGE SEL LVR (AC-DELCO #12561688) ...	97-02	Y (M30)	1	12561688
7.	3-A9	4.085	STUD, TRANSAXLE (8 O'CLOCK, 10 O'CLOCK, 1 O'CLOCK POSNS)	97-02	Y (M30)	3	12553527
8.	3-A8	4.047	BRACKET, A/TRNS RANGE SEL LVR CBL (BRKT FOR RR ONLY) (TO REAR)	97-02	Y	1	12551457
9.		8.917	NUT, HFH, M8X1.25, 17.9 OD, 738 THK, 13MM HEX, 10, ZF (RANGE SEL LVR CBL BRKT "RR BRKT") (8.915) (AC-DELCO #11514596)	97-02	....	2	11514596
10.	3-A8	4.047	RETAINER, A/TRNS RANGE SEL LVR CBL (USED ON SHIFTER END)	97-01	Y (M30)	2	10217245
	3-A8	4.047	RETAINER, A/TRNS RANGE SEL LVR CBL (AT FRT OF DASH) (USED ON SHIFTER END)	01-02	Y07-67 (AG2, AQ9, IL3)	1	22654286
	3-A8	4.047	RETAINER, A/TRNS RANGE SEL LVR CBL (USED ON TRANS END & SHIFTER END) (USED ON SHIFTER END)	02	Y (M30)	2	10217245
11.	3-A7	4.004	CONTROL, A/TRNS (CPS)	97	Y (M30)	1	12562753
	3-A7	4.004	CONTROL, A/TRNS (CPS)	98	Y (M30) (EXC Z4Z)	1	12562753
	3-A7	4.004	CONTROL, A/TRNS (CPS)	98	Y67 (M30, Z4Z)	1	12564519
	3-A7	4.004	CONTROL, A/TRNS (CPS)	99	Y (M30)	1	12562753
	3-A7	4.004	CONTROL, A/TRNS (CPS)	00-02	Y07-67 (M30)	1	12562753
	3-A7	4.004	CONTROL, A/TRNS (EXC BLK CLOTH) (CPS)	00	Y37 (M30)	1	12562753
	3-A7	4.004	CONTROL, A/TRNS (W/BLK CLOTH) (CPS)	00	Y37 (M30)	1	12562754
12.		8.917	NUT, HEX W/CON WA 6X1X5.5 16-OD ZP 9 (A/TRNS CONT) ...	97-02	.....	4	11517293
13.	3-A7	4.006	KNOB, A/TRNS CONT LVR	97	Y (M30)	1	12559930
	3-A7	4.006	KNOB, A/TRNS CONT LVR	98	Y (M30) (EXC Z4Z)	1	12559930
	3-A7	4.006	KNOB, A/TRNS CONT LVR	98	Y67 (M30, Z4Z)	1	12560118
	3-A7	4.006	KNOB, A/TRNS CONT LVR	99-02	Y (M30)	1	12559930
14.	3-A7	4.006	RETAINER, A/TRNS CONT LVR HDL	97-02	Y (M30)	1	10028352
15.	3-A8	4.047	CABLE, A/TRNS PK LK	97-02	Y (M30)	1	10313840
16.	3-M25	2.188	SWITCH, IGN & START (AC-DELCO #D1499C)	97-02	Y	1	10246848

RPO DEFINITIONS
AG2 - ADJUSTER,SEAT,6-WAY POWER,SPLIT BENCH,PASSENGER
AQ9 - SEAT,FRONT BUCKET,DRIVER,PASSENGER,RECLINING
IL3 - TRIM,INTERIOR DESIGN
M30 - TRANSMISSION,AUTOMATIC 4 SPEED,4L60E,ELECTRONIC
Z4Z - MERCHANDISED PKG INDY PACE CAR

cardiagn.com

ILLUSTRATION INDEX

	TITLE	GRID
2001–2002	Y37 BRAKE SYSTEM/COOLING DUCTS	3–G4
1997	Y BRAKE ELECTRICAL SYSTEM/ANTILOCK	3–G6
1998	Y BRAKE ELECTRICAL SYSTEM/ANTILOCK(EXC JAG)	3–G6
1998	Y BRAKE ELECTRICAL SYSTEM/ANTILOCK(JAG)	3–G9
1999	Y BRAKE ELECTRICAL SYSTEM/ANTILOCK	3–G9
2000	Y BRAKE ELECTRICAL SYSTEM/ANTILOCK	3–G14
2001	Y BRAKE ELECTRICAL SYSTEM/ANTILOCK	3–G18
2002	Y BRAKE ELECTRICAL SYSTEM/ANTILOCK	3–G22
1997	Y BRAKE HOSES & PIPES	3–G25
1998	Y BRAKE HOSES & PIPES (EXC JAG)	3–G25
1998	Y BRAKE HOSES & PIPES (JAG,EXC JL4)	3–H2
1999–2000	Y BRAKE HOSES & PIPES (EXC JL4)	3–H2
1998	Y BRAKE HOSES & PIPES (JAG,JL4)	3–H6
1999–2000	Y BRAKE HOSES & PIPES (JL4)	3–H6
2001–2002	Y BRAKE HOSES & PIPES	3–H11
1997–2002	Y BRAKE BOOSTER	3–H15
1997–2002	Y BRAKE MASTER CYLINDER	3–H16
1997–2002	Y BRAKE CALIPER/FRONT	3–H18
1997–2002	Y BRAKE CALIPER/REAR	3–H20
1997–2002	Y BRAKE PEDAL & MASTER CYLINDER MOUNTING	3–H22
1997	Y BRAKE CONTROL MODULATOR VALVE & MOUNTING	3–H25
1998	Y BRAKE CONTROL MODULATOR VALVE & MOUNTING(EXC JAG)	3–H25
1998	Y BRAKE CONTROL MODULATOR VALVE & MOUNTING(JAG)	3–I2
1999–2000	Y BRAKE CONTROL MODULATOR VALVE & MOUNTING	3–I2
2001–2002	Y BRAKE CONTROL MODULATOR VALVE	3–I5
1997–2002	Y PARKING BRAKE SYSTEM	3–I7
1997–2002	Y PARKING BRAKE ASM	3–I9

cardiagn.com

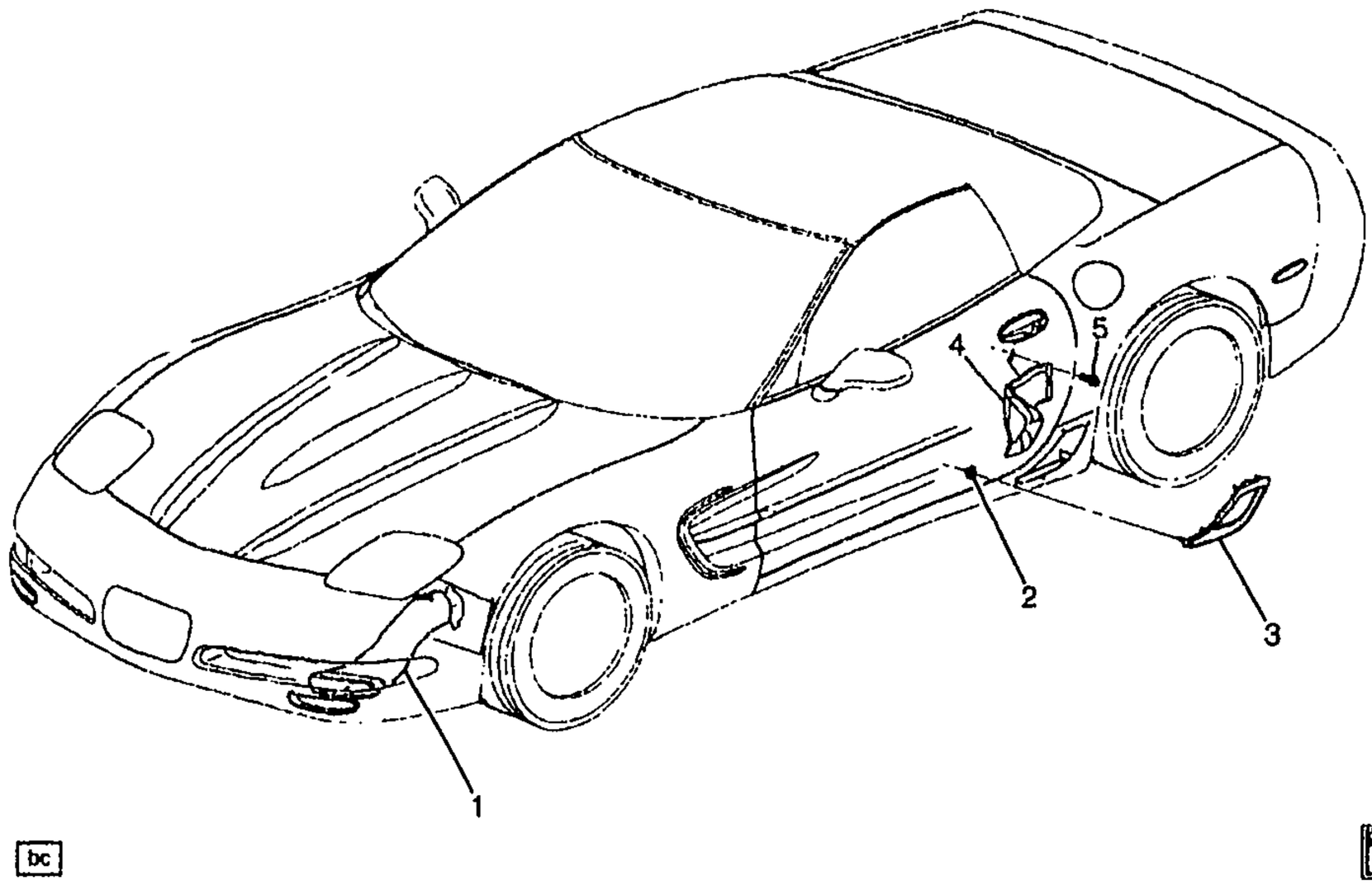

1Y04-055

2001-2002 Y37 BRAKE SYSTEM/COOLING DUCTS

1.	3-C6	4.665	DUCT, FRT BRK CLPR CLG (POSN #1)	01-02	Y	LH	10295976
	3-C6	4.665	DUCT, FRT BRK CLPR CLG (POSN #2)	01-02	Y	RH	10295977

cardiagn.com

						1Y04-055	
2.		8.917	NUT, CONICAL SPR WA HEX (METRIC STYLE 2) M5 X 0.86N 4 (RR BRK CLPR CLG AIR SCOOP)	01-02	.....	8	11503647
3.	3-C6	4.665	SCOOP, RR BRK CLPR CLG AIR .	01-02	Y37	RH	10440858
	3-C6	4.665	SCOOP, RR BRK CLPR CLG AIR .	01-02	Y37	LH	10440860
4.	3-C6	4.665	DUCT, RR BRK CLPR CLG	01-02	Y37 (JL9)	LH	10425976
	3-C6	4.665	DUCT, RR BRK CLPR CLG (4.655)	01-02	Y37 (JL9)	RH	10425977
5.		8.977	SCREW A3M, M4.2X1.4X20, FLAT WASHER, GM6010M, GM613M (RR W/H PNL LNR)	01-02	.....	16	20430420

RPO DEFINITIONS
JL9 - BRAKE SYSTEM,POWER,FRONT AND REAR DISC,ANTILOCK

cardiagn.com

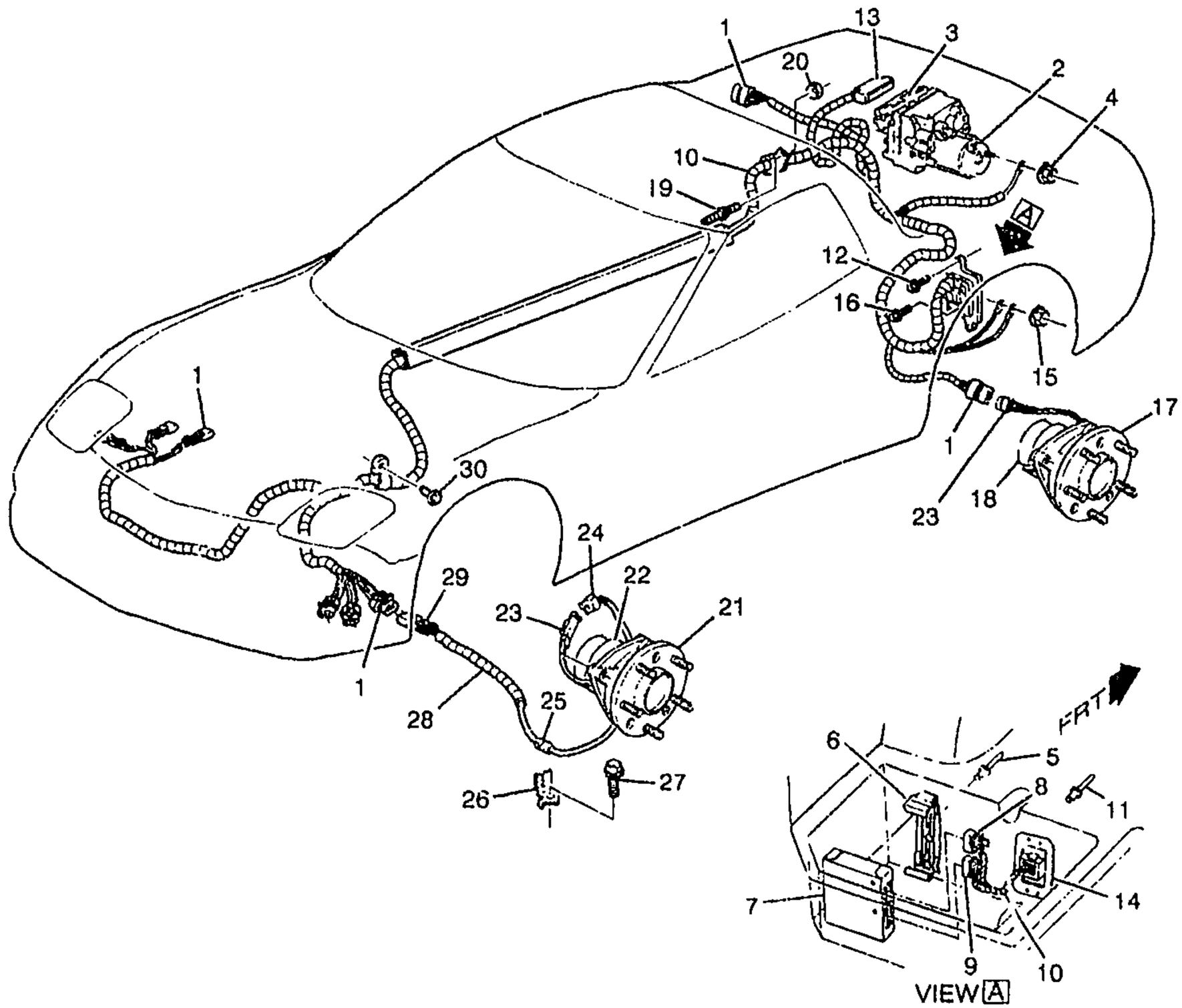

1Y04-041

1997 Y BRAKE ELECTRICAL SYSTEM/ANTILOCK
1998 Y BRAKE ELECTRICAL SYSTEM/ANTILOCK(EXC JAG)

1.	3-C11	4.720	CONNECTOR, INLINE-TO WHL SPD SEN (GREY) (2-WAY F W/LEADS) (4.710) (AC-DELCO #PT1357)	97-98	Y	4	15306302
2.	3-C13	4.730	VALVE, BRK PRESS MOD (AC-DELCO #12527809)	97	Y	1	12527809
	3-C13	4.730	VALVE, BRK PRESS MOD (AC-DELCO #10417038)	98	Y (JL4)	1	10417038
	3-C13	4.730	VALVE, BRK PRESS MOD (AC-DELCO #12527809)	98	Y (EXC JAG)	1	12527809
3.	3-C11	4.720	MODULE, ELEK BRK CONT	97	Y	1	9355246
	3-C11	4.720	MODULE, ELEK BRK CONT (AC-DELCO #9367071)	98	Y07-67 (EXC JL4)	1	9367071

cardiagn.com

							1Y04-041
4.		8.915	NUT, M5X.8, 5 THK, 9M, PEOR (BRK PRESS MOD VLV WRG HARN GND) (POSN #1)	97-98	.....	1	11509203
5.		N.S.	RIVET, ELEK SUSP CONT MDL BRKT		.....		
6.	3-N23	7.450	BRACKET, ELEK SUSP CONT MDL	97-98	Y (F45)	1	10280844
7.	3-N23	7.450	MODULE, ELEK SUSP CONT (RTD MODULE/FAST SHOCK) (AC-DELCO #9360581)	97-98	Y (F45) (EXC VD1)	1	9360581
	3-N23	7.450	MODULE, ELEK SUSP CONT (RTD MODULE/FAST SHOCK) ...	98	Y07-67 (F45, VD1) (EXPORT)	1	9360571
8.	3-N23	7.450	CONNECTOR, MDL-ELEK SUSP CONT (BROWN) (32-WAY F, W/O LEADS, MIC/PAC 100) (3.670)	97-98	Y	1	12160779
9.	3-N23	7.450	CONNECTOR, MDL-ELEK SUSP CONT (BROWN) (24-WAY F) (W/O LEADS) (MIC/PAC 100) (3.670)	97-98	Y	1	12160778
10.	3-N27	13.100	CONNECTOR, INLINE-TO BODY HARN (6-WAY M) (W/LEADS) (2.535) (AC-DELCO #PT267)	97	Y	1	12101876
	3-N27	13.100	CONNECTOR, INLINE-TO BODY HARN (BLACK) (4-WAY M) (W/LEADS) (2.535) (AC-DELCO #PT144)	97-98	Y	1	12085536
	3-N27	13.100	CONNECTOR, INLINE-TO BODY HARN (GRAY) (8-WAY F) (W/LEADS) (2.535) (AC-DELCO #PT214)	97	Y	1	12101822
	3-N27	13.100	CONNECTOR, INLINE-TO BODY HARN (6-WAY F W/LEADS) (13.090) (AC-DELCO #PT1032)	97	Y	1	15305888
11.		N.S.	RIVET, ELEK BRK CONT WRG HARN GROM TAP PLT		.....		
12.		8.977	BOLT, SCR HEX W/FLAT WA 12 DIA TYPE AB (ELEK BRK CONT WRG HARN GROMMT PLT) (W/F45)	97-98	....	2	11509374
13.	3-C11	4.720	CONNECTOR KIT, ELEK BRK CONT MDL WRG HARN (INCLS 32-WAY F & 6-WAY F CONN, RET, CVR & CAV PLUGS/SEALS) .	97-98	Y	1	12167312
14.	3-C11	4.720	PLATE, ELEK BRK CONT WRG HARN GROM TAP (3.675)	97-98	Y (F45)	1	14090610
15.		8.917	NUT, HFH M6X1X6.5 ZOR 9 (BRK PRESS MOD VLV WRG HARN GND) (POSN #2)	97-98	.....	2	3530297
16.		8.977	BOLT, SCR HEX W/FLAT WA 12 DIA TYPE AB (ELEK BRK CONT WRG HARN GROM) (W/F45)	97-98	.....	1	11509374
17.	3-D18	5.855	BEARING, RR WHL (W/INTEGRAL SENSOR) (AC-DELCO #20-71)	97-98	Y	2	7470571

cardiagn.com

						1Y04-041	
18.		N.S.	SENSOR, WHL SPD RR (PART OF BEARING)				
19.	3-N21 3-A9	4.085	STUD, TRANSAXLE (1 O'CLOCK POSN, RR VIEW)	97-98	Y (MM6)	1	12553527
	3-N21 3-A9	4.085	STUD, TRANSAXLE (8 O'CLOCK, 10 O'CLOCK, 1 O'CLOCK POSNS)	97-98	Y (M30)	3	12553527
20.		8.917	NUT, HFH, M8X1.25X8.8, 17.9 OD, 10 DIN, PREV TORQUE (TRANS WRG BRKT)	97-98		1	11517031
21.	3-N22	6.311	BEARING, FRT WHL (W/INTEGRAL SENSOR) (AC-DELCO #20-569)	97-98	Y	2	7470569
22.		N.S.	SENSOR, WHL SPD FRT (PART OF BEARING)				
23.		N.S.	CONNECTOR LEAD-SPD SEN (PART OF BEARING)				
24.	3-C11	4.720	CONNECTOR, INLINE-TO WHL SPD SEN (12116958 FOR NON WHL SPD SEN; FOR WHL SPD SEN APPLICATION, TO BE SERVICED BY HARN/JMPR) (PART OF 28) (GREY) (2-WAY F W/LEADS) (4.710) (AC-DELCO #PT1357)	97-98	Y	4	15306302
25.		N.S.	GROMMET, WHL SPD SEN BRKT (PART OF HARNESS)				
26.	3-C10	4.710	BRACKET, WHL SPD SEN	97-98	Y	RH	10278547
	3-C10	4.710	BRACKET, WHL SPD SEN	97-98	Y	LH	10278548
27.	3-C10	4.710	BOLT, WHL SPD SEN BRKT (10.685)	97-98	Y	2	11515397
28.	3-C11	4.720	HARNESS, WHL SPD SEN WRG HARN EXTN (INCLS 24, 29)	97-98	Y	2	12163714
29.	3-N14	2.530	CONNECTOR, INLINE-TO TRANS HARN (PART OF 28) (2-WAY M W/O LEADS) (4.720)	97-98	Y	2	12162343
30.		8.900	BOLT, HEX, M8X1.25X16, 15 THD, 18 OD, 10.9, MAT, 7114M, FIN, MACH (TRANS WRG HARN BRKT) (POSN #2)	97-98		1	11515755

RPO DEFINITIONS
F45 - CHASSIS CONTINUOUS VALVE REAL TIME DAMPING
JAG - BRAKE PROVISIONS ABS LOCATION
JL4 - CONTROL ACTIVE BRAKE
MM6 - TRANSMISSION MAN 6 SPD, BORG WARNER, 85MM, 1ST 2.66, 6TH 0.50, O/D
M30 - TRANSMISSION,AUTOMATIC 4 SPEED,4L60E,ELECTRONIC
VD1 - PROVISION OPTIONS,EUROPE(EXPORT)

cardiagn.com

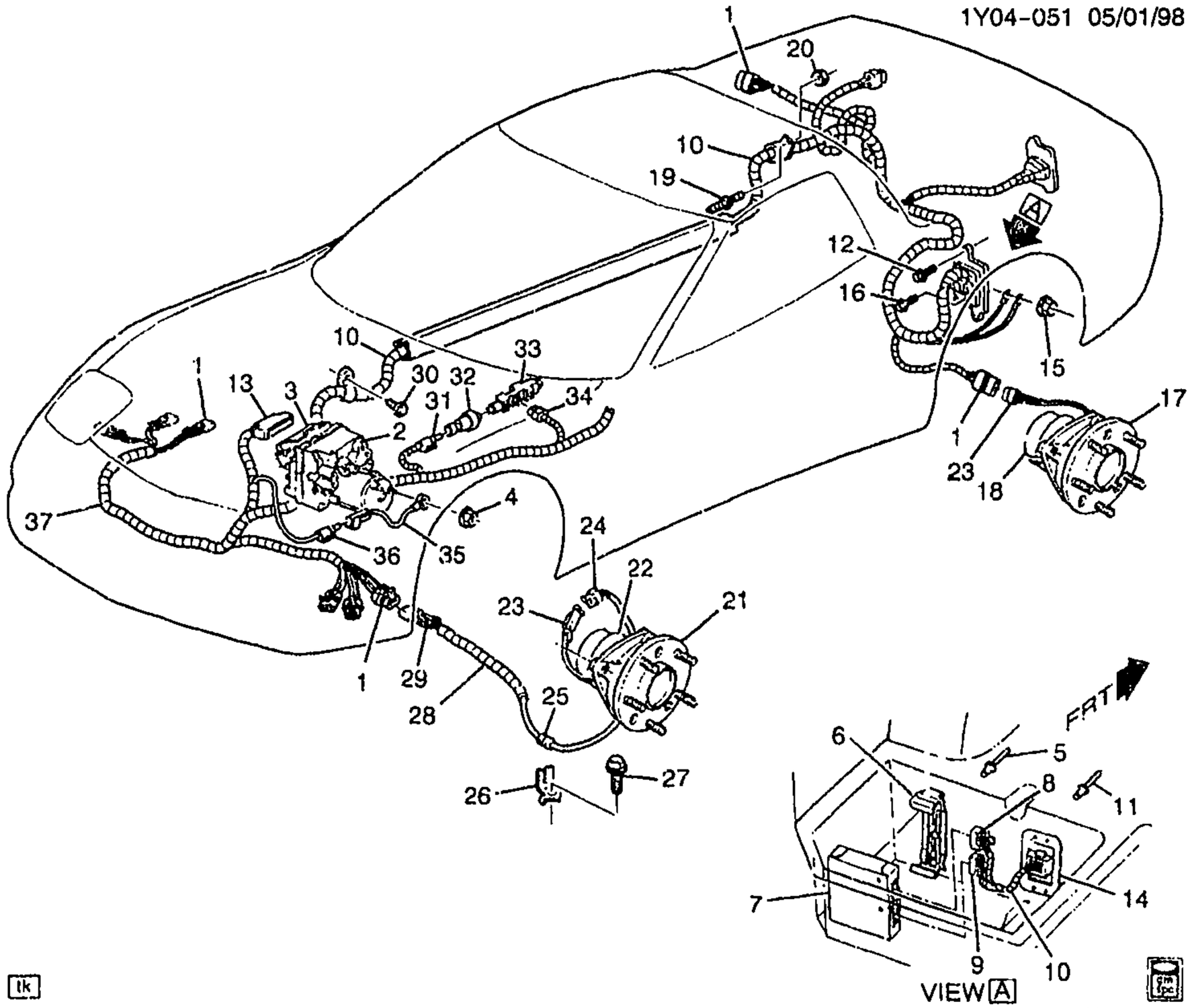

1998 Y BRAKE ELECTRICAL SYSTEM/ANTILOCK(JAG)
1999 Y BRAKE ELECTRICAL SYSTEM/ANTILOCK

1.	3-C11	4.720	CONNECTOR, INLINE-TO WHL SPD SEN (GREY) (2-WAY F W/LEADS) (4.710) (AC-DELCO #PT1357)	98-99	Y	4	15306302
2.	3-C13	4.730	VALVE, BRK PRESS MOD (AC-DELCO #10417038)	98-99	Y (JL4)	1	10417038
	3-C13	4.730	VALVE, BRK PRESS MOD (AC-DELCO #12530740)	98	Y (JAG) (EXC JL4)	1	12530740
	3-C13	4.730	VALVE, BRK PRESS MOD (AC-DELCO #12530740)	99	Y (JL9) (EXC JL4)	1	12530740
3.	3-C11	4.720	MODULE, ELEK BRK CONT (AC-DELCO #9367071)	98	Y07-67 (EXC JL4)	1	9367071
	3-C11	4.720	MODULE, ELEK BRK CONT (AC-DELCO #9367071)	99	Y07-67 (JL9) (EXC JL4)	1	9367071
	3-C11	4.720	MODULE, ELEK BRK CONT (AC-DELCO #09376711)	99	Y (JL4, JL9)	1	9376711
	3-C11	4.720	MODULE, ELEK BRK CONT (AC-DELCO #9367071)	99	Y37 (JL9, NV7, Z19) (EXC JL4)	1	9367071

cardiagn.com

							1Y04–051
	3–C11	4.720	MODULE, ELEK BRK CONT (AC–DELCO #09378853)	99	Y37 (JL9) (EXC NV7) ..	1	9378853
	3–C11	4.720	MODULE, ELEK BRK & TRACT CONT (AC–DELCO #09376711) .	98	Y (JAG, JL4, JL9)	1	9376711
4.		8.915	NUT, M5X.8, 5 THK, 9M, PEOR (BRK PRESS MOD VLV WRG HARN GND) (POSN #1)	98–99	.....	1	11509203
5.		N.S.	RIVET, ELEK SUSP CONT MDL BRKT		.....		
6.	3–N23	7.450	BRACKET, ELEK SUSP CONT MDL	98–99	Y (F45)	1	10280844
7.	3–N23	7.450	MODULE, ELEK SUSP CONT (RTD MODULE/FAST SHOCK) (AC–DELCO #9360581)	98–99	Y (F45) (EXC VD1)	1	9360581
	3–N23	7.450	MODULE, ELEK SUSP CONT (RTD MODULE/FAST SHOCK) ...	98–99	Y07–67 (F45, VD1) (EXPORT)	1	9360571
8.	3–N23	7.450	CONNECTOR, MDL–ELEK SUSP CONT (BROWN) (32–WAY F, W/O LEADS, MIC/PAC 100) (3.670)	98–99	Y	1	12160779
9.	3–N23	7.450	CONNECTOR, MDL–ELEK SUSP CONT (BROWN) (24–WAY F) (W/O LEADS) (MIC/PAC 100) (3.670)	98–99	Y	1	12160778
10.	3–M25	2.480	HARNESS, TRANS WRG	98	Y (M30, JAG) (EXC F45)	1	12163790
	3–M25	2.480	HARNESS, TRANS WRG	98	Y (MM6, JAG) (EXC F45, VD1)	1	12163791
	3–M25	2.480	HARNESS, TRANS WRG	98	Y (M30, F45, JAG)	1	12163792
	3–M25	2.480	HARNESS, TRANS WRG	98	Y (MM6, F45, JAG) (EXC VD1)	1	12163793
	3–M25	2.480	HARNESS, TRANS WRG (AC–DELCO #12189826)	99	Y (M30) (EXC F45)	1	12189826
	3–M25	2.480	HARNESS, TRANS WRG (AC–DELCO #12189827)	99	Y (MM6) (EXC F45, VD1)	1	12189827
	3–M25	2.480	HARNESS, TRANS WRG (AC–DELCO #12189828)	99	Y (M30, F45)	1	12189828
	3–M25	2.480	HARNESS, TRANS WRG (AC–DELCO #12189829)	99	Y (MM6, F45) (EXC VD1)	1	12189829
	3–M25	2.480	HARNESS, TRANS WRG	98	Y (MM6, F45, JAG, VD1) (EXPORT)	1	12189912
	3–M25	2.480	HARNESS, TRANS WRG	98	Y (MM6, JAG, VD1) (EXC F45) (EXPORT) ..	1	12189913
	3–M25	2.480	HARNESS, TRANS WRG (ENHANCE EVAP) (AC–DELCO #12189914)	99	Y (MM6, F45, VD1) (EXPORT)	1	12189914
	3–M25	2.480	HARNESS, TRANS WRG (ENHANCE EVAP) (AC–DELCO #12189915)	99	Y (MM6, VD1) (EXC F45) (EXPORT)	1	12189915
11.		N.S.	RIVET, ELEK BRK CONT WRG HARN GROM TAP PLT		.....		
12.		8.977	BOLT, SCR HEX W/FLAT WA 12 DIA TYPE AB (ELEK BRK CONT WRG HARN GROMMT PLT) (W/F45)	98–99	....	2	11509374

cardiagn.com

							1Y04-051
13.	3-C11	4.720	CONNECTOR KIT, ELEK BRK CONT MDL WRG HARN (INCLS 32-WAY F & 6-WAY F CONN, RET, CVR & CAV PLUGS/SEALS) .	98-99	Y	1	12167312
14.	3-C11	4.720	PLATE, ELEK BRK CONT WRG HARN GROM TAP (3.675)	98-99	Y (F45)	1	14090618
15.		8.917	NUT, HFH M6X1X6.5 ZOR 9 (BRK PRESS MOD VLV WRG HARN GND) (POSN #2)	98-99	.....	2	3530297
16.		8.977	BOLT, SCR HEX W/FLAT WA 12 DIA TYPE AB (ELEK BRK CONT WRG HARN GROM) (W/F45)	98-99	.....	1	11509374
17.	3-D18	5.855	BEARING, RR WHL (W/INTEGRAL SENSOR) (AC-DELCO #20-71)	98-99	Y	2	7470571
18.		N.S.	SENSOR, WHL SPD RR (PART OF BEARING)		.....		
19.	3-N21 3-A9	4.085	STUD, TRANSAXLE (1 O'CLOCK POSN, RR VIEW)	98-99	Y (MM6)	1	12553527
	3-N21 3-A9	4.085	STUD, TRANSAXLE (8 O'CLOCK, 10 O'CLOCK, 1 O'CLOCK POSNS)	98-99	Y (M30)	3	12553527
20.		8.917	NUT, HFH, M8X1.25X8.8, 17.9 OD, 10 DIN, PREV TORQUE (TRANS WRG BRKT)	98-99	.....	1	11517031
21.	3-N22	6.311	BEARING, FRT WHL (W/INTEGRAL SENSOR) (AC-DELCO #20-569)	98-99	Y	2	7470569
22.		N.S.	SENSOR, WHL SPD FRT (PART OF BEARING)		.....		
23.		N.S.	CONNECTOR LEAD-SPD SEN (PART OF BEARING)		.....		
24.	3-C11	4.720	CONNECTOR, INLINE-TO WHL SPD SEN (12116958 FOR NON WHL SPD SEN; FOR WHL SPD SEN APPLICATION, TO BE SERVICED BY HARN/JMPR) (PART OF 28) (GREY) (2-WAY F W/LEADS) (4.710) (AC-DELCO #PT1357)	98-99	Y	4	15306302
25.		N.S.	GROMMET, WHL SPD SEN BRKT (PART OF HARNESS)		.....		
26.	3-C10	4.710	BRACKET, WHL SPD SEN	98-99	Y	RH	10278547
	3-C10	4.710	BRACKET, WHL SPD SEN	98-99	Y	LH	10278548
27.	3-C10	4.710	BOLT, WHL SPD SEN BRKT (10.685)	98-99	Y	2	11515397
28.	3-C11	4.720	HARNESS, WHL SPD SEN WRG HARN EXTN (INCLS 24, 29)	98-99	Y	2	12163714
29.	3-N14	2.530	CONNECTOR, INLINE-TO TRANS HARN (PART OF 28) (2-WAY M W/O LEADS) (4.720) .	98-99	Y	2	12162343
30.		8.900	BOLT, HEX, M8X1.25X16, 15 THD, 18 OD, 10.9, MAT, 7114M, FIN, MACH (TRANS WRG HARN BRKT) (POSN #2)	98-99	.....	1	11515755

cardiagn.com

							1Y04-051
31.	3-C10	4.710	CONNECTOR, SEN-BRK PRESS MOD VLV PRESS (BLACK) (3-WAY F) (W/LEADS) (2.535) (AC-DELCO #PT375) ...	98-99	Y	1	12102748
	3-C10	4.710	CONNECTOR, SEN-BRK PRESS MOD VLV PRESS (BLACK) (3-WAY F) (W/LEADS) (2.535) (AC-DELCO #PT375) ...	98	Y07-67 (JAG)	1	12102748
32.	3-C10	4.710	SENSOR, BRK PRESS MOD VLV PRESS	98	Y (JAG, JL4)	1	10411078
	3-C10	4.710	SENSOR, BRK PRESS MOD VLV PRESS	99	Y (JL4)	1	10411078
33.	3-C10	4.690	VALVE, BRK COMB (AC-DELCO #172-2247)	98	Y (JAG, JL4)	1	10293376
	3-C10	4.690	VALVE, BRK COMB (AC-DELCO #172-2247)	99	Y (JL4)	1	10293376
34.	3-C6	4.663	CONNECTOR, SW-BRK PRESS DIFF (WHITE) (2-WAY F, W/LEADS) (2.535) (AC-DELCO #PT249)	98-99	Y	1	12101857
35.	3-C11	4.720	WIRE, BRK PRESS MOD VLV WRG HARN GND	98	Y (JAG)	1	12163796
	3-C11	4.720	WIRE, BRK PRESS MOD VLV WRG HARN GND	99	Y	1	12163796
36.		N.S.	CONNECTOR, (PART OF 37)		.....		
37.	3-M25	2.480	HARNESS, FWD LP WRG (INCLS 36)	98	Y (JAG, T96) (EXC JL4, T90)	1	12189515
	3-M25	2.480	HARNESS, FWD LP WRG (INCLS 36)	98	Y (JAG) (EXC JL4, T96)	1	12189517
	3-M25	2.480	HARNESS, FWD LP WRG (INCLS 36)	98	Y (JAG, JL4, T96) (EXC T90)	1	12189518
	3-M25	2.480	HARNESS, FWD LP WRG (INCLS 36)	98	Y (JAG, JL4) (EXC T96)	1	12189520
	3-M25	2.480	HARNESS, FWD LP WRG (INCLS 36)	99	Y07-67 (T96) (EXC JL4, T90)	1	12189973
	3-M25	2.480	HARNESS, FWD LP WRG (INCLS 36)	99	Y07-67 (EXC JL4, T90, T96)	1	12189974
	3-M25	2.480	HARNESS, FWD LP WRG (INCLS 36)	99	Y (JL4, T96) (EXC T90) .	1	12189976
	3-M25	2.480	HARNESS, FWD LP WRG (INCLS 36)	99	Y07-67 (JL4) (EXC T90, T96)	1	12189978
	3-M25	2.480	HARNESS, FWD LP WRG (INCLS 36)	99	Y37 (T96) (EXC JL4) ...	1	12189973
	3-M25	2.480	HARNESS, FWD LP WRG (INCLS 36)	99	Y37 (NV7) (EXC JL4, T96)	1	12189974
	3-M25	2.480	HARNESS, FWD LP WRG (INCLS 36)	99	Y07-67 (T90) (EXC JL4) (EXPORT)	1	12189975
	3-M25	2.480	HARNESS, FWD LP WRG (INCLS 36)	99	Y07-67 (JL4, T90) (EXPORT)	1	12189978

RPO DEFINITIONS

F45 – CHASSIS CONTINUOUS VALVE REAL TIME DAMPING
JAG – BRAKE PROVISIONS ABS LOCATION
JL4 – CONTROL ACTIVE BRAKE
JL9 – BRAKE SYSTEM,POWER,FRONT AND REAR DISC,ANTILOCK
MM6 – TRANSMISSION MAN 6 SPD, BORG WARNER, 85MM, 1ST 2.66, 6TH 0.50 O/D
M30 – TRANSMISSION,AUTOMATIC 4 SPEED,4L60E,ELECTRONIC
NV7 – STEERING,POWER,VARIABLE EFFORT
T90 – LAMP,SIGNALING AND MARKER(EXPORT)

cardiagn.com

196 – LAMP,FRONT FOG
VD1 – PROVISION OPTIONS,EUROPE(EXPORT)
Z19 – PERFORMANCE PKG COUPE

cardiagn.com

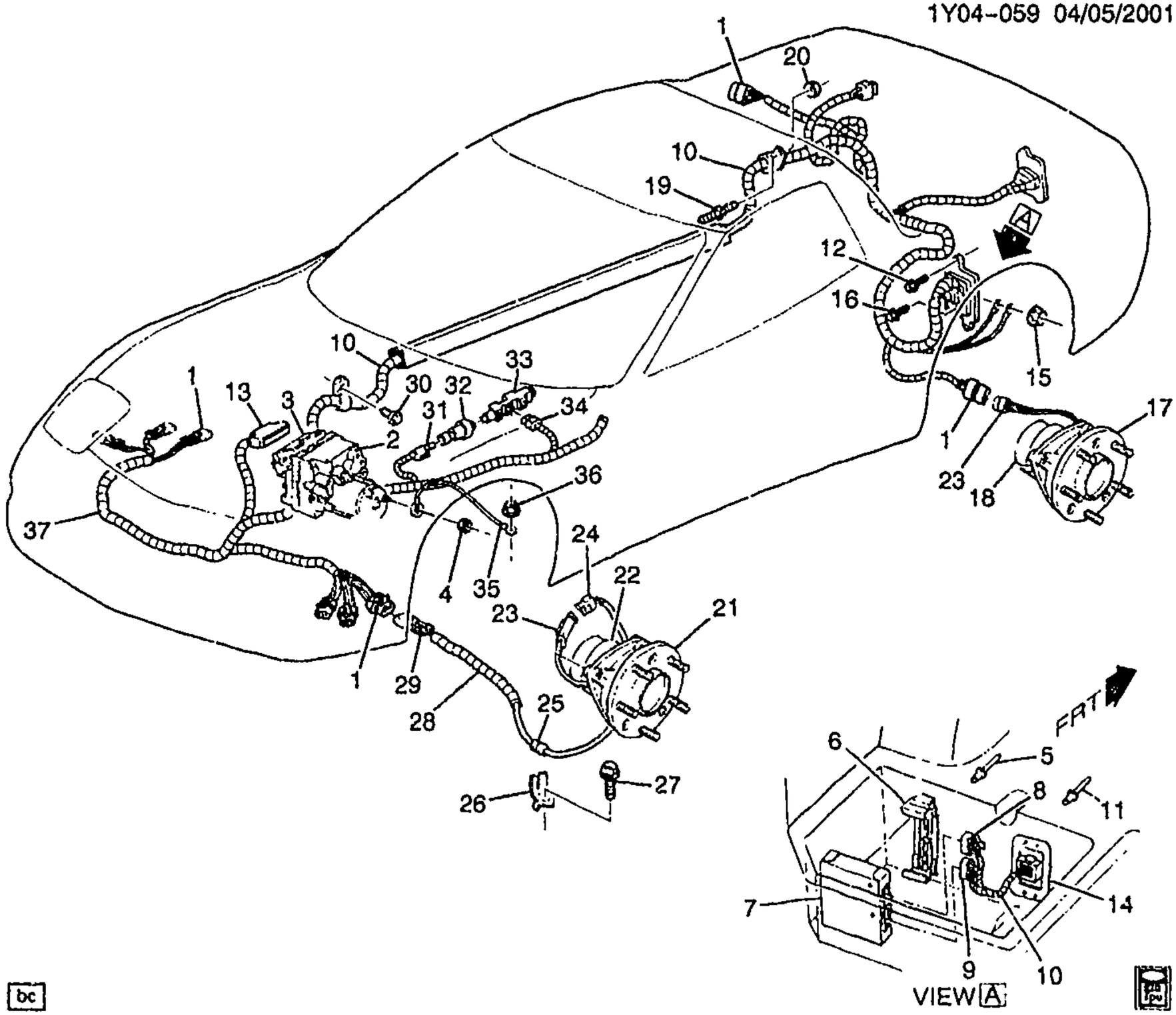

1Y04-059

2000 Y BRAKE ELECTRICAL SYSTEM/ANTILOCK

1.	3-C11	4.720	CONNECTOR, INLINE-TO WHL SPD SEN (GREY) (2-WAY F W/LEADS) (4.710) (AC-DELCO #PT1357)	00	Y	4 15306302
2.	3-C13	4.730	VALVE, BRK PRESS MOD (AC-DELCO #10417038)	00	Y (JL4)	1 10417038
	3-C13	4.730	VALVE, BRK PRESS MOD (AC-DELCO #12530740)	00	Y (JL9) (EXC JL4)	1 12530740
	3-C13	4.730	VALVE, BRK PRESS MOD (AC-DELCO #12530740)	00	Y07 (T86) (EXC JL4) ...	1 12530740
3.	3-C11	4.720	MODULE, ELEK BRK CONT (AC-DELCO #9367071)	00	Y07-67 (JL9) (EXC JL4)	1 9367071
	3-C11	4.720	MODULE, ELEK BRK CONT (AC-DELCO #09376711)	00	Y (JL4, JL9)	1 9376711
4.		8.915	NUT, M5X.8, 5 THK, 9M, PEOR (BRK PRESS MOD VLV WRG HARN GND) (POSN #1)	00	....	1 11509203

cardiagn.com

							1Y04–059
5.		N.S.	RIVET, ELEK SUSP CONT MDL BRKT				
6.	3–N23	7.450	BRACKET, ELEK SUSP CONT MDL	00	Y (F45)	1	10280844
7.	3–N23	7.450	MODULE, ELEK SUSP CONT	00	YY07–67 (F45)	1	9366711
8.	3–N23	7.450	CONNECTOR, MDL–ELEK SUSP CONT (BROWN) (32–WAY F, W/O LEADS, MIC/PAC 100) (3.670)	00	Y	1	12160779
9.	3–N23	7.450	CONNECTOR, MDL–ELEK SUSP CONT (BROWN) (24–WAY F) (W/O LEADS) (MIC/PAC 100) (3.670)	00	Y	1	12160778
10.	3–M25	2.480	HARNESS, TRANS WRG (AC–DELCO #12189826)	00	Y (M30) (EXC F45)	1	12189826
	3–M25	2.480	HARNESS, TRANS WRG (AC–DELCO #12189827)	00	Y (MM6) (EXC F45, VD1)	1	12189827
	3–M25	2.480	HARNESS, TRANS WRG (AC–DELCO #12189828)	00	Y (M30, F45)	1	12189828
	3–M25	2.480	HARNESS, TRANS WRG (AC–DELCO #12189829)	00	Y (MM6, F45) (EXC VD1)	1	12189829
	3–M25	2.480	HARNESS, TRANS WRG (ENHANCE EVAP) (AC–DELCO #12189914)	00	Y (MM6, F45, VD1) (EXPORT)	1	12189914
	3–M25	2.480	HARNESS, TRANS WRG (ENHANCE EVAP) (AC–DELCO #12189915)	00	Y (MM6, VD1) (EXC F45) (EXPORT)	1	12189915
11.		N.S.	RIVET, ELEK BRK CONT WRG HARN GROM TAP PLT				
12.		8.977	BOLT, SCR HEX W/FLAT WA 12 DIA TYPE AB (ELEK BRK CONT WRG HARN GROMMT PLT) (W/F45)	00		2	11509374
13.	3–C11	4.720	CONNECTOR KIT, ELEK BRK CONT MDL WRG HARN (INCLS 32–WAY F & 6–WAY F CONN, RET, CVR & CAV PLUGS/SEALS)	00	Y	1	12167312
14.	3–C11	4.720	PLATE, ELEK BRK CONT WRG HARN GROM TAP (3.675)	00	Y (F45)	1	14090618
15.		8.917	NUT, HFH M6X1X6.5 ZOR 9 (BRK PRESS MOD VLV WRG HARN GND) (POSN #2)	00		2	3530297
16.		8.977	BOLT, SCR HEX W/FLAT WA 12 DIA TYPE AB (ELEK BRK CONT WRG HARN GROM) (W/F45)	00		1	11509374
17.	3–D18	5.855	BEARING, RR WHL (W/INTEGRAL SENSOR) (AC–DELCO #20–71)	00	Y	2	7470571
18.		N.S.	SENSOR, WHL SPD RR (PART OF BEARING)				
19.	3–N21 3–A9	4.085	STUD, TRANSAXLE (1 O'CLOCK POSN, RR VIEW)	00	Y (MM6)	1	12553527
	3–N21 3–A9	4.085	STUD, TRANSAXLE (8 O'CLOCK, 10 O'CLOCK, 1 O'CLOCK POSNS)	00	Y (M30)	3	12553527
20.		8.917	NUT, HFH, M8X1.25X8.8, 17.9 OD, 10 DIN, PREV TORQUE (TRANS WRG BRKT)	00		1	11517031

cardiagn.com

						1Y04-059	
21.	3-N22	6.311	**BEARING**, FRT WHL (ID:LM501349-LM501310) (INCLS CUP&CONE) (1 5/8 ID X 2 57/64 OD X 25/32 THK) (TIMKEN) (5.536) (AC-DELCO #S21)	00	Y	2	457232
	3-N22	6.311	**BEARING**, FRT WHL (W/INTEGRAL SENSOR) (AC-DELCO #20-569)	00	Y	2	7470569
22.		N.S.	**SENSOR**, WHL SPD FRT (PART OF BEARING)		.....		
23.		N.S.	**CONNECTOR LEAD-SPD SEN** (PART OF BEARING)		.....		
24.	3-C11	4.720	**CONNECTOR**, INLINE-TO WHL SPD SEN (12116958 FOR NON WHL SPD SEN; FOR WHL SPD SEN APPLICATION, TO BE SERVICED BY HARN/JMPR) (PART OF 28) (GREY) (2-WAY F W/LEADS) (4.710) (AC-DELCO #PT1357)	00	Y	4	15306302
25.		N.S.	**GROMMET**, WHL SPD SEN BRKT (PART OF HARNESS)		.....		
26.	3-C10	4.710	**BRACKET**, WHL SPD SEN	00	Y	RH	10278547
	3-C10	4.710	**BRACKET**, WHL SPD SEN	00	Y	LH	10278548
27.	3-C10	4.710	**BOLT**, WHL SPD SEN BRKT (10.685)	00	Y	2	11515397
28.	3-C11	4.720	**HARNESS**, WHL SPD SEN WRG HARN EXTN (INCLS 24, 29)	00	Y	2	12163714
29.	3-N14	2.530	**CONNECTOR**, INLINE-TO TRANS HARN (PART OF 28) (2-WAY M W/O LEADS) (4.720) .	00	Y	2	12162343
30.		8.900	**BOLT**, HEX, M8X1.25X16, 15 THD, 18 OD, 10.9, MAT, 7114M, FIN, MACH (TRANS WRG HARN BRKT) (POSN #2)	00	.....	1	11515755
31.	3-C10	4.710	**CONNECTOR**, SEN-BRK PRESS MOD VLV PRESS (BLACK) (3-WAY F) (W/LEADS) (2.535) (AC-DELCO #PT375) ...	00	Y	1	12102748
32.	3-C10	4.710	**SENSOR**, BRK PRESS MOD VLV PRESS	00	Y (JL4)	1	10411078
33.	3-C10	4.690	**VALVE**, BRK COMB (AC-DELCO #172-2247)	00	Y (JL4)	1	10293376
34.	3-C6	4.663	**CONNECTOR**, SW-BRK PRESS DIFF (WHITE) (2-WAY F, W/LEADS) (2.535) (AC-DELCO #PT249)	00	Y	1	12101857
35.	3-C11	4.720	**WIRE**, BRK PRESS MOD VLV WRG HARN GND	00	Y	1	15329395
36.		8.917	**NUT**, HFH M6X1X6.5 ZOR 9 (PART OF 37)	00	.....	1	3530297
37.	3-M25	2.480	**HARNESS**, FWD LP WRG (INCLS 36)	00	Y07-67 (EXC JL4, T90)	1	15329403
	3-M25	2.480	**HARNESS**, FWD LP WRG (INCLS 36)	00	Y (JL4) (EXC T90)	1	15329406
	3-M25	2.480	**HARNESS**, FWD LP WRG (INCLS 36)	00	Y37 (EXC JL4)	1	15329403

cardiagn.com

					1Y04-059	
3-M25	2.480	HARNESS, FWD LP WRG (INCLS 36)	00	Y07-67 (T90) (EXC JL4) (EXPORT)	1	15329405
3-M25	2.480	HARNESS, FWD LP WRG (INCLS 36)	00	Y07-67 (JL4, T90) (EXPORT)	1	15329408

RPO DEFINITIONS
F45 - CHASSIS CONTINUOUS VALVE REAL TIME DAMPING
JL4 - CONTROL ACTIVE BRAKE
JL9 - BRAKE SYSTEM,POWER,FRONT AND REAR DISC,ANTILOCK
MM6 - TRANSMISSION MAN 6 SPD, BORG WARNER, 85MM, 1ST 2.66, 6TH 0.50, O/D
M30 - TRANSMISSION,AUTOMATIC 4 SPEED,4L60E,ELECTRONIC
T86 - LAMP TAIL & STOP, EXPORT
T90 - LAMP,SIGNALING AND MARKER(EXPORT)
VD1 - PROVISION OPTIONS,EUROPE(EXPORT)

cardiagn.com

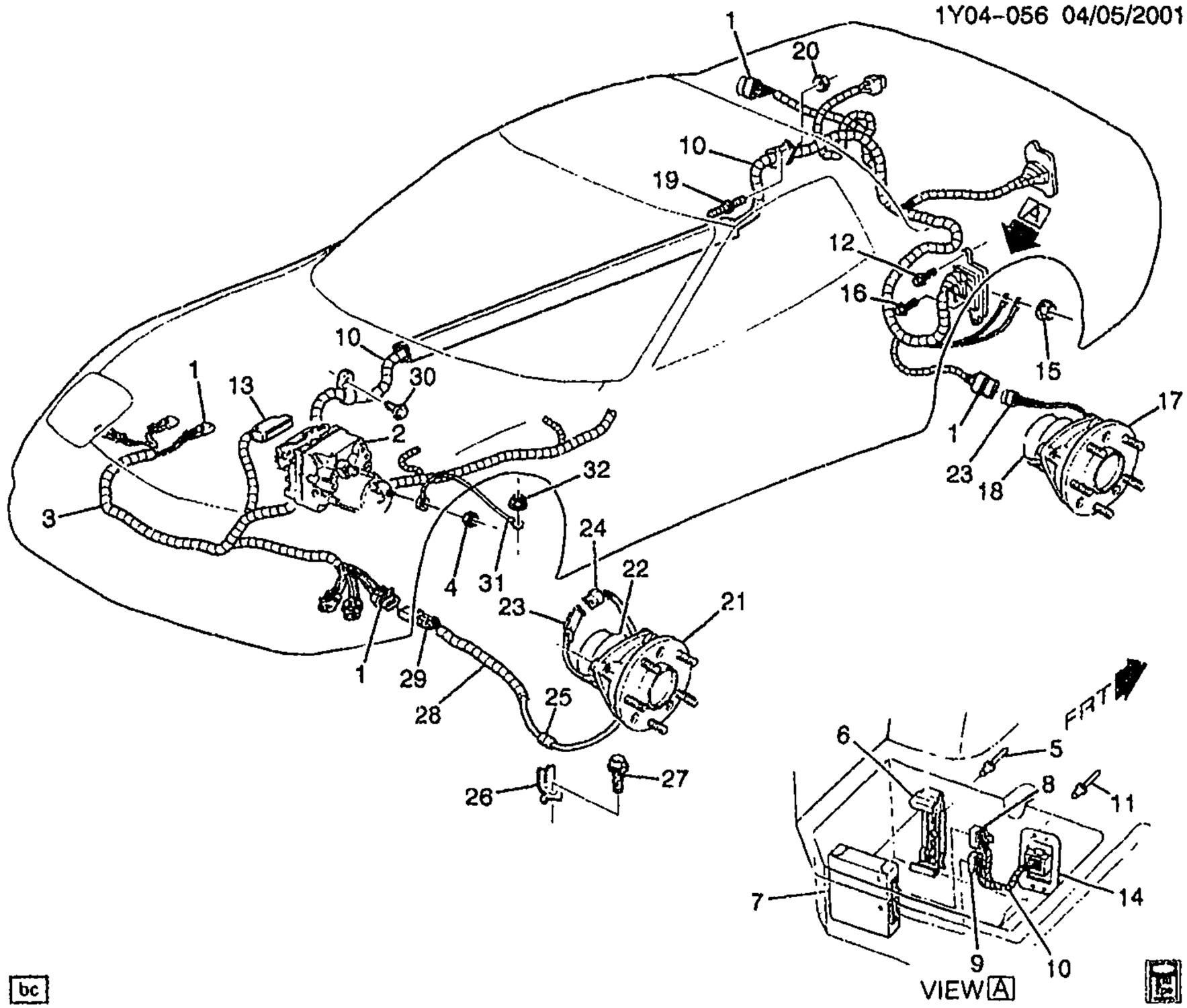

2001 Y BRAKE ELECTRICAL SYSTEM/ANTILOCK

1.	3-C11	4.720	CONNECTOR, INLINE-TO WHL SPD SEN (GREY) (2--WAY F W/LEADS) (4 710) (AC-DELCO #PT1357)	01	Y	4 15306302
2.		N.S.	VALVE, BRK PRESS MOD (W/ELEK BRK & TRACT CONT MDL) (SEE GROUP 4 "BRAKE CONTROL MODULATOR VALVE" FOR DETAILED ILLUSTRATED VIEW)	01	.....	
3.	3-M25	2.480	HARNESS, FWD LP WRG (INCLS 32) (2ND DSN USED ON/AFTER VIN #15107689, (1ST DSN 10448116))	01	YY07-67 (JL4) (EXC T90) (2ND DES)	1 10310796
	3-M25	2.480	HARNESS, FWD LP WRG (INCLS 32) (2ND DSN USED ON/AFTER VIN #15107689, (1ST DSN 10448118))	01	YY07-67 (JL4, T90) (2ND DES)	1 10310798

cardiagn.com

							1Y04-056
	3-M25	2.480	HARNESS, FWD LP WRG (INCLS 32) (1ST DSN USED B/4 VIN #15107689, (2ND DSN 10310796))	01	YY07-67 (JL4) (EXC T90) (1ST DES)	1	10448116
	3-M25	2.480	HARNESS, FWD LP WRG (INCLS 32) (1ST DSN USED B/4 VIN #15107689, (2ND DSN 10310798))	01	YY07-67 (JL4, T90) (1ST DES)	1	10448118
	3-M25	2.480	HARNESS, FWD LP WRG (INCLS 32)	01	YY37	1	10310796
	3-M25	2.480	HARNESS, FWD LP WRG (INCLS 32)	01	YY37	1	10448116
4.		8.915	NUT, M5X.8, 5 THK, 9M, PEOR (BRK PRESS MOD VLV WRG HARN GND) (POSN #1)	01	.....	1	11509203
5.		N.S.	RIVET, ELEK SUSP CONT MDL BRKT		.....		
6.	3-N23	7.450	BRACKET, ELEK SUSP CONT MDL	01	Y (F45)	1	10280844
7.	3-N23	7.450	MODULE, ELEK SUSP CONT ...	01	YY07-67 (F45)	1	9366711
8.	3-N23	7.450	CONNECTOR, MDL-ELEK SUSP CONT (BROWN) (32-WAY F, W/O LEADS, MIC/PAC 100) (3.670)	01	Y	1	12160779
9.	3-N23	7.450	CONNECTOR, MDL-ELEK SUSP CONT (BROWN) (24-WAY F) (W/O LEADS) (MIC/PAC 100) (3.670)	01	Y	1	12160778
10.	3-M25	2.480	HARNESS, TRANS WRG	01	Y (M30) (EXC F45)	1	10448120
	3-M25	2.480	HARNESS, TRANS WRG	01	Y (MM6) (EXC F45, VD1)	1	10448121
	3-M25	2.480	HARNESS, TRANS WRG	01	Y (M30, F45)	1	10448122
	3-M25	2.480	HARNESS, TRANS WRG	01	Y (MM6, F45) (EXC VD1)	1	10448123
	3-M25	2.480	HARNESS, TRANS WRG	01	YY37	1	10448126
	3-M25	2.480	HARNESS, TRANS WRG (ENHANCE EVAP)	01	Y (MM6, F45, VD1) (EXPORT)	1	10448124
	3-M25	2.480	HARNESS, TRANS WRG (ENHANCE EVAP)	01	Y (MM6, VD1) (EXC F45) (EXPORT)	1	10448125
11.		N.S.	RIVET, ELEK BRK CONT WRG HARN GROM TAP PLT		.....		
12.		8.977	BOLT, SCR HEX W/FLAT WA 12 DIA TYPE AB (ELEK BRK CONT WRG HARN GROMMT PLT) (W/F45)	01	.....	2	11509374
13.	3-C11	4.720	CONNECTOR, MDL-ELEK BRK CONT (7-WAY F W/O LEADS AND 29 WAY F)	01	Y	1	12167602
	3-C11	4.720	CONNECTOR, MDL-ELEK BRK CONT (29-WAY FEM MIC/P 100W (W/O LEADS) (29-WAY F, MIC/P100, W/O LEADS) (4.663) ..	01	YY07-67	1	15356700
14.	3-C11	4.720	PLATE, ELEK BRK CONT WRG HARN GROM TAP (3.675)	01	Y (F45)	1	14090618
15.		8.917	NUT, HFH M6X1X6.5 ZOR 9 (BRK PRESS MOD VLV WRG HARN GND) (POSN #2)	01	. ...	2	3530297

cardiagn.com

							1Y04-056
16.		8.977	BOLT, SCR HEX W/FLAT WA 12 DIA TYPE AB (ELEK BRK CONT WRG HARN GROM) (W/F45)	01	.....	1	11509374
17.	3-D18	5.855	BEARING, RR WHL (W/INTEGRAL SENSOR) (AC-DELCO #20-71)	01	Y	2	7470571
18.		N.S.	SENSOR, WHL SPD RR (PART OF BEARING)		.....		
19.	3-N21 3-A9	4.085	STUD, TRANSAXLE (1 O'CLOCK POSN, RR VIEW)	01	Y (MM6, M12)	1	12553527
	3-N21 3-A9	4.085	STUD, TRANSAXLE (8 O'CLOCK, 10 O'CLOCK, 1 O'CLOCK POSNS)	01	Y (M30)	3	12553527
20.		8.917	NUT, HFH, M8X1.25X8.8, 17.9 OD, 10 DIN, PREV TORQUE (TRANS WRG BRKT)	01	.....	1	11517031
21.	3-N22	6.311	BEARING, FRT WHL (W/INTEGRAL SENSOR) (AC-DELCO #20-569)	01	Y	2	7470569
22.		N.S.	SENSOR, WHL SPD FRT (PART OF BEARING)		.....		
23.		N.S.	CONNECTOR LEAD-SPD SEN (PART OF BEARING)		.....		
24.	3-C11	4.720	CONNECTOR, INLINE-TO WHL SPD SEN (12116958 FOR NON WHL SPD SEN; FOR WHL SPD SEN APPLICATION, TO BE SERVICED BY HARN/JMPR) (PART OF 28) (GREY) (2-WAY F W/LEADS) (4.710) (AC-DELCO #PT1357)	01	Y	4	15306302
	3-N27	13.100	CONNECTOR, INLINE-TO BODY HARN (BLACK) (4-WAY M) (W/LEADS) (2.535) (AC-DELCO #PT144)	01	Y	1	12085536
	3-N27	13.100	CONNECTOR, INLINE-TO BODY HARN (BLUE) (4-WAY M) (W/O LEADS) (9.656)	01	Y (VD1)	1	12047817
	3-N27	13.100	CONNECTOR, INLINE-TO BODY HARN (WHITE) (8-WAY F W/LEADS) (2.535) (AC-DELCO #PT444)	01	Y	1	12117271
25.		N.S.	GROMMET, WHL SPD SEN BRKT (PART OF HARNESS)		.....		
26.	3-C10	4.710	BRACKET, WHL SPD SEN	01	Y	RH	10278547
	3-C10	4.710	BRACKET, WHL SPD SEN	01	Y	LH	10278548
27.	3-C10	4.710	BOLT, WHL SPD SEN BRKT (10.685)	01	Y	2	11515397
28.	3-C11	4.720	HARNESS, WHL SPD SEN WRG HARN EXTN (INCLS 24, 29)	01	Y	2	12163714
29.	3-N14	2.530	CONNECTOR, INLINE-TO TRANS HARN (PART OF 28) (2-WAY M W/O LEADS) (4.720) .	01	Y	2	12162343
30.		8.900	BOLT, HEX, M8X1.25X16, 15 THD, 18 OD, 10.9, MAT, 7114M, FIN, MACH (TRANS WRG HARN BRKT) (POSN #2)	01	.....	1	11515755

cardiagn.com

							1Y04-036
31.	3-C11	4.720	WIRE, BRK PRESS MOD VLV WRG HARN GND	01	Y	1	15329395
32.		N.S.	CONNECTOR, (PART OF 3)		.....		

RPO DEFINITIONS
F45 – CHASSIS CONTINUOUS VALVE REAL TIME DAMPING
JL4 – CONTROL ACTIVE BRAKE
MM6 – TRANSMISSION MAN 6 SPD, BORG WARNER, 85MM. 1ST 2.66, 6TH 0.50, O/D
M12 – TRANSMISSION MAN 6 SPD, TREMEC, 85MM, 1ST 2.97, 6TH 0.57, O/D
M30 – TRANSMISSION,AUTOMATIC 4 SPEED,4L60E,ELECTRONIC
T90 – LAMP,SIGNALING AND MARKER(EXPORT)
VD1 – PROVISION OPTIONS,EUROPE(EXPORT)

cardiagn.com

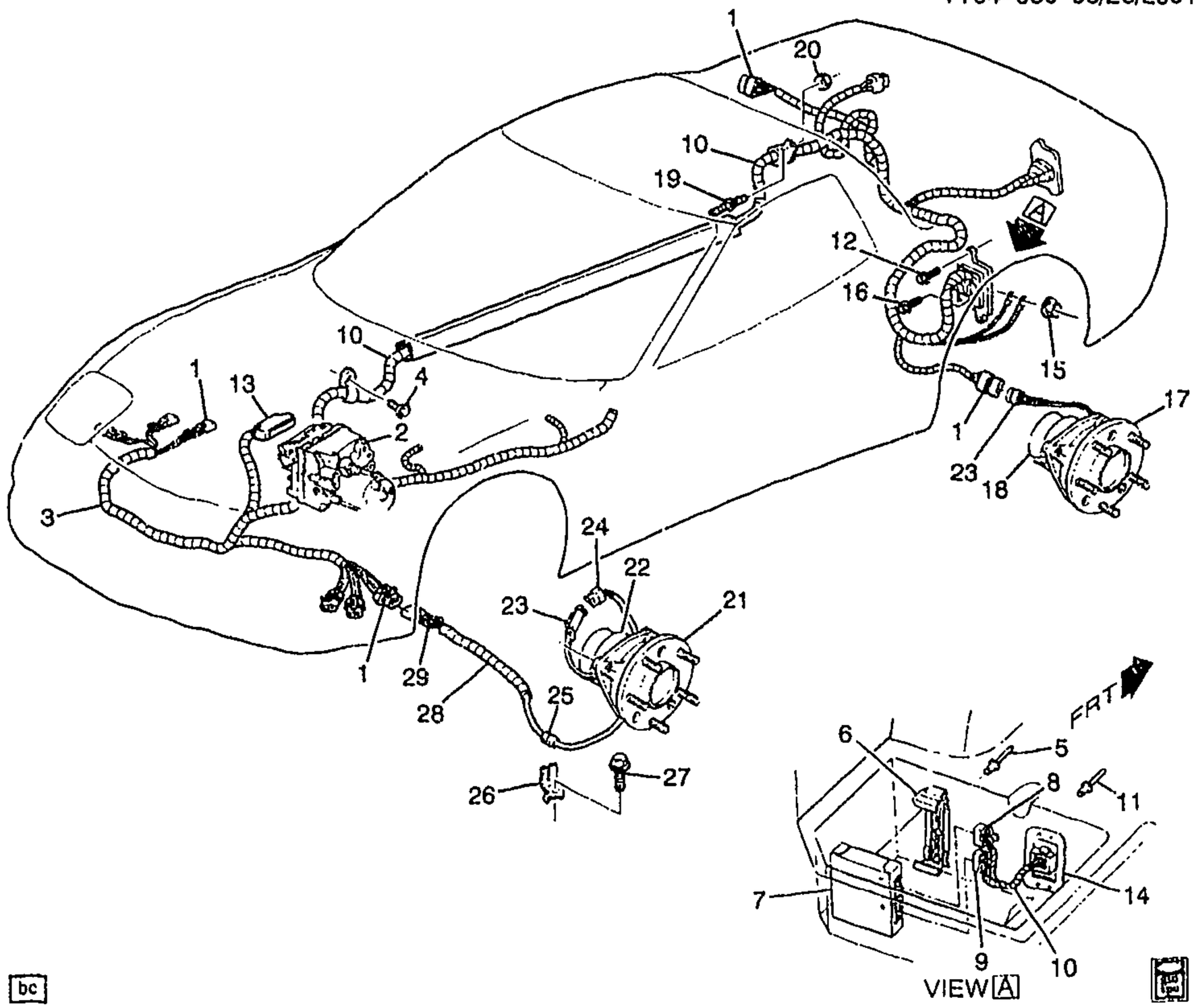

1Y04-060

2002 Y BRAKE ELECTRICAL SYSTEM/ANTILOCK

1.	3-C11	4.720	CONNECTOR, INLINE-TO WHL SPD SEN (GREY) (2-WAY F W/LEADS) (4 710) (AC-DELCO #PT1357)	02	Y	4	15306302
2.		N.S.	VALVE, BRK PRESS MOD (W/ELEK BRK & TRACT CONT MDL) (SEE GROUP 4 "BRAKE CONTROL MODULATOR VALVE" FOR DETAILED ILLUSTRATED VIEW)		.....		
3.	3-M25	2.480	HARNESS, FWD LP WRG (INCLS 32)	02	YY37	1	10310796
	3-M25	2.480	HARNESS, FWD LP WRG (INCLS 32)	02	YY07-67 (EXC T90) ...	1	10310796
	3-M25	2.480	HARNESS, FWD LP WRG (INCLS 32)	02	YY07-67 (T90) (EXPORT)	1	10310798

cardiagn.com

							YY04-060
4.		8.900	BOLT, HEX, M8X1.25X16, 15 THD, 18 OD, 10.9, MAT, 7114M, FIN, MACH (TRANS WRG HARN BRKT) (POSN #2)	02		1	11515755
5.		N.S.	RIVET, ELEK SUSP CONT MDL BRKT				
6.	3-N23	7.450	BRACKET, ELEK SUSP CONT MDL	02	Y (F45)	1	10280844
7.	3-N23	7.450	MODULE, ELEK SUSP CONT	02	YY07-67 (F45)	1	9366711
8.	3-N23	7.450	CONNECTOR, INLINE-TO ELEK SUSP MDL (BROWN) (32-WAY F, W/O LEADS, MIC/PAC 100) (3.670)	02	Y	1	12160779
9.	3-N23	7.450	CONNECTOR, MDL-ELEK SUSP CONT (BROWN) (24-WAY F) (W/O LEADS) (MIC/PAC 100) (3.670)	02	Y	1	12160778
10.	3-M25	2.480	HARNESS, TRANS WRG	02	Y (M30) (EXC F45)	1	10448120
	3-M25	2.480	HARNESS, TRANS WRG	02	Y (MM6) (EXC F45, VD1)	1	10448121
	3-M25	2.480	HARNESS, TRANS WRG	02	Y (M30, F45)	1	10448122
	3-M25	2.480	HARNESS, TRANS WRG	02	Y (MM6, F45) (EXC VD1)	1	10448123
	3-M25	2.480	HARNESS, TRANS WRG	02	YY37	1	10448126
	3-M25	2.480	HARNESS, TRANS WRG (ENHANCE EVAP)	02	Y (MM6, F45, VD1) (EXPORT)	1	10448124
	3-M25	2.480	HARNESS, TRANS WRG (ENHANCE EVAP)	02	Y (MM6, VD1) (EXC F45) (EXPORT)	1	10448125
11.		N.S.	RIVET, ELEK BRK CONT WRG HARN GROM TAP PLT				
12.		8.977	BOLT, SCR HEX W/FLAT WA 12 DIA TYPE AB (ELEK BRK CONT WRG HARN GROMMT PLT) (W/F45)	02		2	11509374
13.	3-C11	4.720	CONNECTOR, MDL-ELEK BRK CONT (7-WAY F W/O LEADS AND 29 WAY F)	02	Y	1	12167602
	3-C11	4.720	CONNECTOR, MDL-ELEK BRK CONT (29-WAY FEM MIC/P 100W (W/O LEADS) (29-WAY F, MIC/P100. W/O LEADS) (4.663)	02	YY07-67	1	15356700
14.	3-C11	4.720	PLATE. ELEK BRK CONT WRG HARN GROM TAP (3.675)	02	Y (F45)	1	14090618
15.		8.917	NUT, HFH M6X1X6.5 ZOR 9 (BRK PRESS MOD VLV WRG HARN GND) (POSN #2)	02		2	3530297
16.		8.977	BOLT, SCR HEX W/FLAT WA 12 DIA TYPE AB (ELEK BRK CONT WRG HARN GROM) (W/F45)	02		1	11509374
17.	3-D18	5.855	BEARING, RR WHL (W/INTEGRAL SENSOR) (AC-DELCO #20-71)	02	Y	2	7470571
18.		N.S.	SENSOR, WHL SPD RR (PART OF BEARING)				
19.	3-N21 3-A9	4.085	STUD, TRANSAXLE (1 O'CLOCK POSN, RR VIEW)	02	Y (MM6, M12)	1	12553527

cardiagn.com

	3-N21 3-A9	4.085	STUD, TRANSAXLE (8 O'CLOCK, 10 O'CLOCK, 1 O'CLOCK POSNS)	02	Y (M30)	3	12553527
20.		8.917	NUT, HFH, M8X1.25X8.8, 17.9 OD, 10 DIN, PREV TORQUE (TRANS WRG BRKT)	02		1	11517031
21.	3-N22	6.311	BEARING, FRT WHL (W/INTEGRAL SENSOR) (AC--DELCO #20-569)	02	Y	2	7470569
22.		N.S.	SENSOR, WHL SPD FRT (PART OF BEARING)				
23.		N.S.	CONNECTOR LEAD-SPD SEN (PART OF BEARING)				
24.	3-C11	4.720	CONNECTOR, INLINE-TO WHL SPD SEN (12116958 FOR NON WHL SPD SEN; FOR WHL SPD SEN APPLICATION, TO BE SERVICED BY HARN/JMPR) (PART OF 28) (GREY) (2-WAY F W/LEADS) (4.710) (AC-DELCO #PT1357)	02	Y	4	15306302
25.		N.S.	GROMMET, WHL SPD SEN BRKT (PART OF HARNESS)				
26.	3-C10	4.710	BRACKET, WHL SPD SEN	02	Y	RH	10278547
	3-C10	4.710	BRACKET, WHL SPD SEN	02	Y	LH	10278548
27.	3-C10	4.710	BOLT, WHL SPD SEN BRKT (10.685)	02	Y	2	11515397
28.	3-C11	4.720	HARNESS, WHL SPD SEN WRG HARN EXTN (INCLS 24, 29)	02	Y	2	12163714
29.	3-N14	2.530	CONNECTOR, INLINE-TO TRANS HARN (PART OF 28) (2-WAY M W/O LEADS) (4.720)	02	Y	2	12162343

RPO DEFINITIONS
F45 – CHASSIS CONTINUOUS VALVE REAL TIME DAMPING
MM6 – TRANSMISSION MAN 6 SPD, BORG WARNER, 85MM, 1ST 2.66, 6TH 0.50, O/D
M12 – TRANSMISSION MAN 6 SPD, TREMEC, 85MM, 1ST 2.97, 6TH 0.57, O/D
M30 – TRANSMISSION,AUTOMATIC 4 SPEED,4L60E,ELECTRONIC
T90 – LAMP,SIGNALING AND MARKER(EXPORT)
VD1 – PROVISION OPTIONS,EUROPE(EXPORT)

cardiagn.com

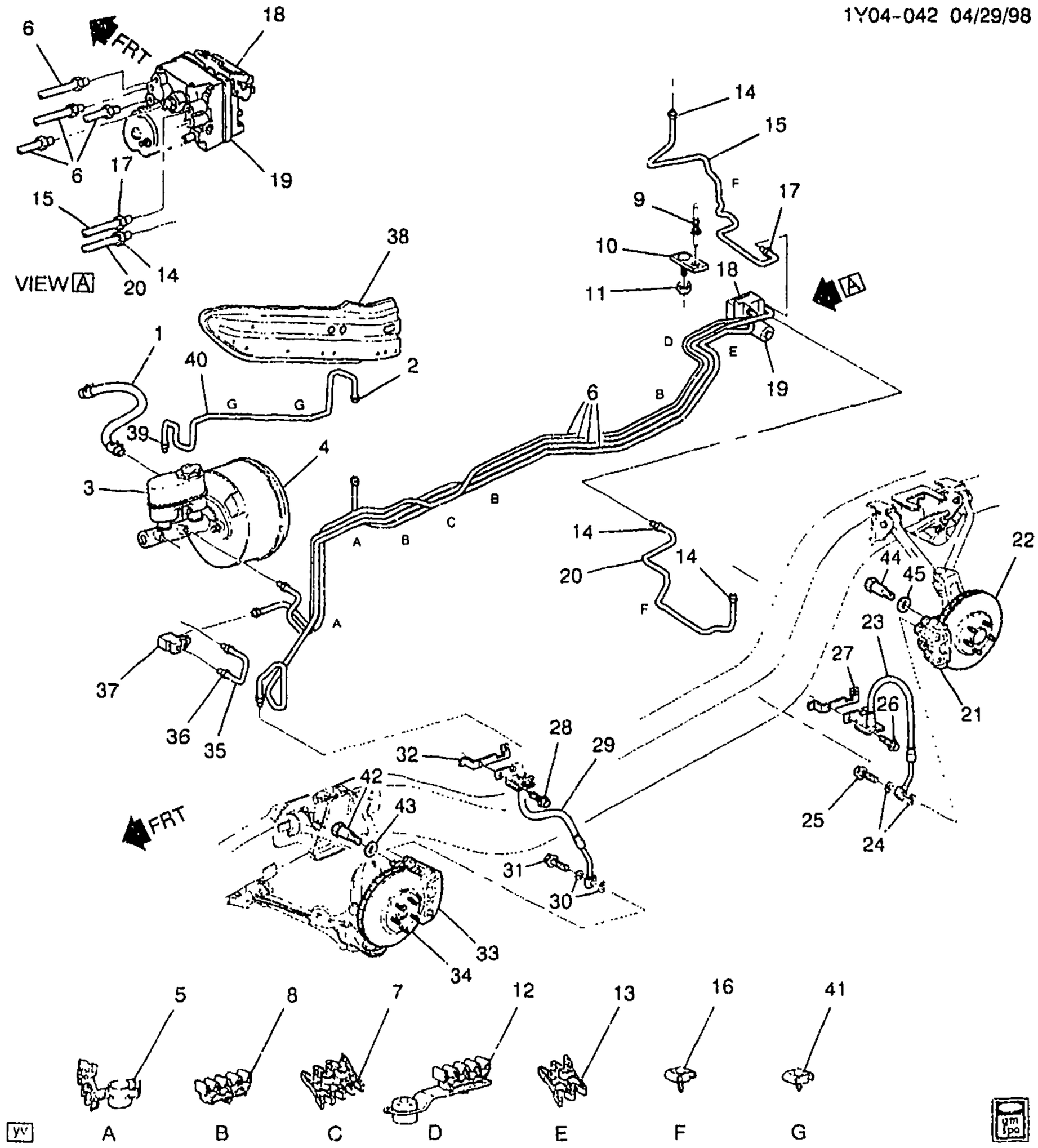

1Y04-042

1997 Y BRAKE HOSES & PIPES
1998 Y BRAKE HOSES & PIPES (EXC JAG)

1.	3-C14	4.931	HOSE, P/B BOOS VAC	97-98	Y	1	10255124
2.	3-C9	4.686	NUT, FRT BRK PIPE (HEX 5.00 TUBE M10X1) (3.163)	97-98	Y	1	14100427

cardiagn.com

							1Y04-042
3.	3-C6	4.650	CYLINDER, BRK MAS (AC-DELCO #174-743)	97	Y	1	18029860
	3-C6	4.650	CYLINDER, BRK MAS (AC-DELCO #174-747)	98	Y	1	18026278
4.	3-C14	4.901	BOOSTER, P/B (AC-DELCO #178-638)	97-98	Y	1	18026035
	3-C14	4.805	BOOSTER, P/B (4.901) (AC-DELCO #178-638)	97-98	Y	1	18026035
5.	3-C9	4.686	CLIP, FRT BRK PIPE	97-98	Y	2	10288895
6.		8.965	TUBING, BULK (STEEL) 3/16X20 FT ROLL (FRT BRK) (8.964)	97-98		1	12547207
		8.964	PIPE, 6.0M X 0.7M, 25' ROLL, CTL (BRK PRESS MOD VLV M/CYL RSVR RR)	97-98		1	12300088
7.	3-C14	4.785	RETAINER, BRK PIPE CLIP BOLT (PUSH ON)	97-98	Y	1	10276217
8.	3-C9	4.686	CLIP, FRT BRK PIPE	97-98	Y	3	10276215
9.		N.S.	RIVET, BRK PIPE CLIP ANC PLT				
10.	3-C9	4.686	PLATE, BRK PIPE CLIP ANC (INCLS STUD) (3.162)	97-98	Y	1	10402723
11.		8.917	NUT, HEX W/CON WA 6X1X5.5 16-OD ZP 9 (BRK PIPE CLIP)	97-98		1	11517293
12.	3-C9	4.686	CLIP, FRT BRK C/OVR PIPE (BRK PRESS MOD VLV) (M/CYL RSVR)	97-98	Y	1	10276214
13.	3-C9	4.686	CLIP, RR BRK PIPE	97-98	Y	2	10288896
14.		8.963	NUT , FLRD TUBE, M10X1X17.3, 4.75 TUBE, 7113M (BRK PRESS MOD VLV)	97-98		3	11516402
15.		8.965	TUBING, BULK (STEEL) 3/16X20 FT ROLL (RR BRK) (TO VLV/BRK PRESS MOD) (RH) (8.964)	97-98		1	12547207
16.	3-C9	4.686	RETAINER, RR BRK PIPE	97-98	Y	2	10407022
17.		8.963	NUT, M12X1X17.6, LCS, ZE, 4.75 TUBE OD, 35 DEG (BRK PRESS MOD VLV) (8.924)	97-98		1	11516404
18.	3-C11	4.720	MODULE, ELEK BRK CONT	97	Y	1	9355246
	3-C11	4.720	MODULE, ELEK BRK CONT (AC-DELCO #9367071)	98	Y07-67 (EXC JL4)	1	9367071
19.	3-C13	4.730	VALVE, BRK PRESS MOD (AC-DELCO #12527809)	97	Y	1	12527809
	3-C13	4.730	VALVE, BRK PRESS MOD (AC-DELCO #10417038)	98	Y (JL4)	1	10417038
	3-C13	4.730	VALVE, BRK PRESS MOD (AC-DELCO #12527809)	98	Y (EXC JL4)	1	12527809
20.		8.965	TUBING, BULK (STEEL) 3/16X20 FT ROLL (RR BRK) (TO VLV/BRK PRESS MOD) (LH) (8.964)	97-98		1	12547207
21.	3-C7	4.667	CALIPER KIT, RR BRK (AC-DELCO #172-2221)	97-98	Y	RH	12530684
	3-C7	4.667	CALIPER KIT, RR BRK (AC-DELCO #172-2222)	97-98	Y	LH	12530685
22.	3-D17	5.809	ROTOR, RR BRK (1 PC CAST IRON) (AC-DELCO #177-855)	97-98	Y	RH	10445858
	3-D17	5.809	ROTOR, RR BRK (1 PC CAST IRON) (AC-DELCO #177-854)	97-98	Y	LH	10445859
23.	3-C8	4.680	HOSE, RR BRK	97-98	Y	2	22163402

cardiagn.com

							1Y04-042
24.	3-C8	4.681	GASKET, RR BRK HOSE FTG (10.3X14.5X1.61) (COPPER) (AC-DELCO #21012386)	97-98	Y	4	21012386
25.	3-C8	4.671	FITTING, RR BRK HOSE (4.686)	97-98	Y	2	22163795
26.		8.900	BOLT/SCREW, HEX W/FL WA 17 OD, M6X1X20, 9.8, 4345M, DOG PT (RR BRK HOSE BRKT)	97-98		2	11515704
27.	3-C8	4.681	BRACKET, RR BRK HOSE	97-98	Y	2	10281416
28.		8.900	BOLT/SCREW, HEX W/FL WA 17 OD, M6X1X20, 9.8, 4345M, DOG PT (FRT BRK HOSE BRKT)	97-98		2	11515704
29.	3-C8	4.680	HOSE, FRT BRK	97	Y	2	22163399
	3-C8	4.680	HOSE, FRT BRK	98	Y	2	22163727
30.	3-C9	4.686	GASKET, FRT BRK HOSE FTG (10.3X14.5X1.61) (COPPER) (4.681) (AC-DELCO #21012386)	97-98	Y	4	21012386
31.	3-C9	4.686	FITTING, FRT BRK HOSE	97-98	Y	2	22163795
32.	3-C8	4.681	BRACKET, FRT BRK HOSE	97-98	Y	2	10281416
33.	3-C7	4.667	CALIPER KIT, FRT BRK (AC-DELCO #172-2219)	97-98	Y	RH	12530682
	3-C7	4.667	CALIPER KIT, FRT BRK (AC-DELCO #172-2220)	97-98	Y	LH	12530683
34.	3-D17	5.809	ROTOR, FRT BRK (1 PC CAST IRON) (AC-DELCO #177-853)	97-98	Y	RH	10445856
	3-D17	5.809	ROTOR, FRT BRK (1 PC CAST IRON) (AC-DELCO #177-852)	97-98	Y	LH	10445857
35.		8.964	PIPE, 6.0M X 0.7M, 25' ROLL, CTL (BRK PROPN VLV) (RR BRK M/C)	97-98		1	12300088
36.		8.924	NUT-METRIC MALE MUSHROOM FLARED TUBE (BRK PROPN VLV) (RR PIPE)	97-98		2	11516405
37.	3-C6	4.652	VALVE, BRK PROPN RR	97-98	Y	1	10279616
38.	3-N26	12.980	BRACE, FLR PNL TUN FRT	97-98	Y	RH	10293680
	3-N26	12.980	BRACE, FLR PNL TUN FRT	97-98	Y	LH	10444631
39.		8.963	NUT, FLRD TUBE, M10X1X17.3, 4.75 TUBE, 7113M (BRK PRESS MOD VLV) (ON CROSSOVER PIPE)	97-98		1	11516402
40.		8.965	TUBING, BULK (STEEL) 3/16X20 FT ROLL (FRT BRK CROSSOVER) (8.964)	97-98		1	12547207
41.	3-C9	4.686	RETAINER, FRT BRK PIPE	97-98	Y	1	10294712
42.	3-C6	4.665	BOLT, FRT BRK CLPR (M14X2X47)	97-98	Y	4	14084051
43.	3-C6	4.665	WASHER, FRT BRK CLPR (28MM OD X 15.75MM ID)	97-98	Y	4	14080254
44.	3-C6	4.665	BOLT, RR BRK CLPR (M14X2X47)	97-98	Y	4	14084051
45.	3-C6	4.665	WASHER, RR BRK CLPR (28MM OD X 15.75MM ID)	97-98	Y	4	14080254

RPO DEFINITIONS
JAG - BRAKE PROVISIONS ABS LOCATION
JL4 - CONTROL ACTIVE BRAKE

cardiagn.com

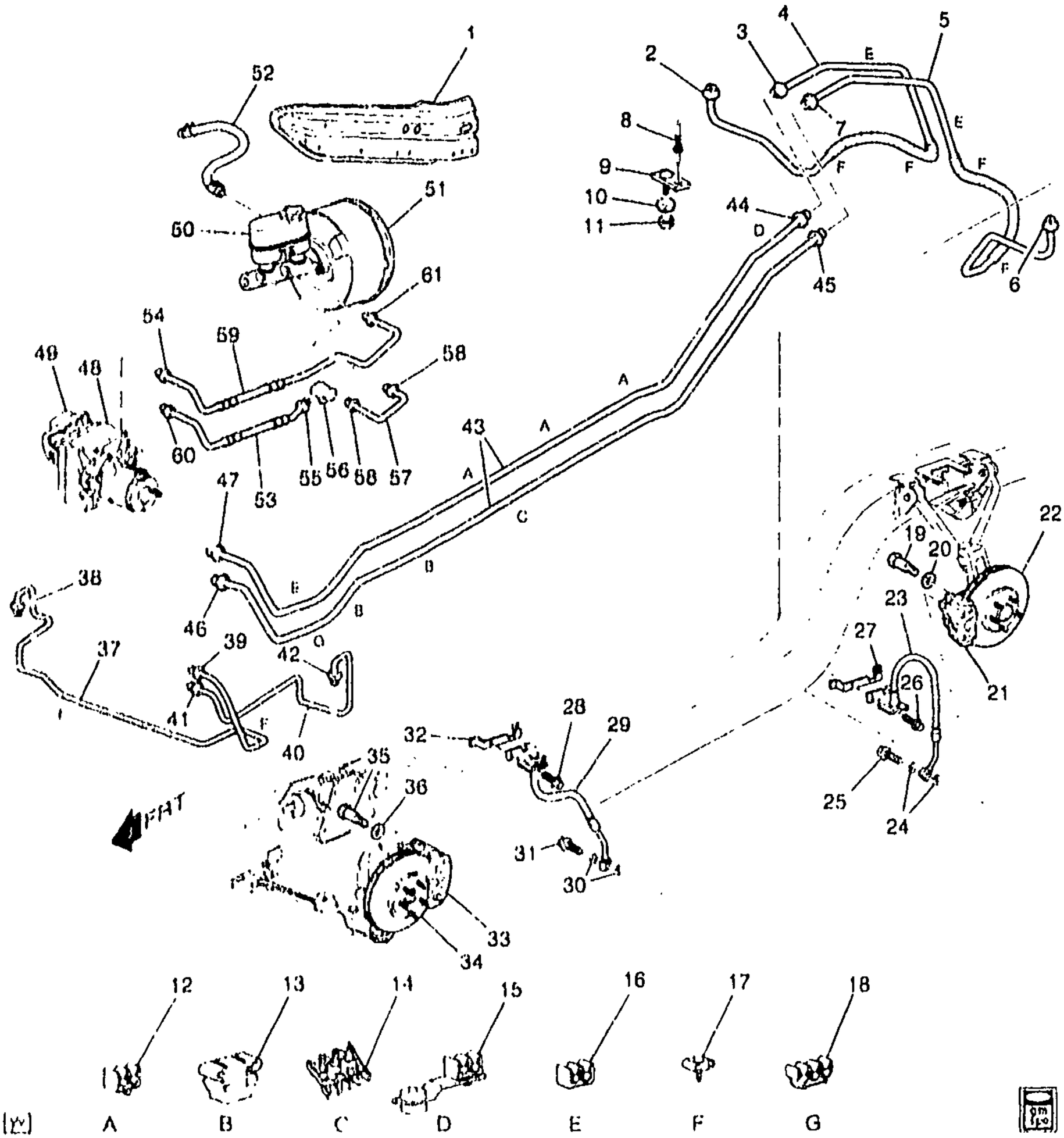

1998 Y BRAKE HOSES & PIPES (JAG,EXC JL4)
1999-2000 Y BRAKE HOSES & PIPES (EXC JL4)

1.	3-N20	12.980	BRACE, FLR PNL TUN FRT	98-00	Y	RH	10293680
	3-N20	12.980	BRACE, FLR PNL TUN FRT	98-00	Y	LH	10444631
2.		8.963	NUT, FLRD TUBE, M10X1X17.3.	98-00	Y	1	11516402
			4.76 TUBE, 7113M (RR BRK C/OVR PIPE)				

cardiagn.com

						1Y04--052	
3.	3-C9	4.686	FITTING, RR BRK C/OVR PIPE (HEX 5.00 TUBE M10X1) (3.163) .	98-00	Y	1	14100427
4.		8.965	TUBING, BULK (STEEL) 3/16X20 FT ROLL (RR BRK C/OVR) (8.964)	98-00	Y	AR	12547207
5.		8.965	TUBING, BULK (STEEL) 3/16X20 FT ROLL (RR BRK C/OVR) (8.964)	98-00	Y	AR	12547207
6.		8.963	NUT , FLRD TUBE, M10X1X17.3, 4.75 TUBE, 7113M (RR BRK C/OVR PIPE)	98-00	Y	1	11516402
7.		8.963	NUT , FLRD TUBE, M10X1X17.3, 4.75 TUBE, 7113M (RR BRK C/OVR PIPE)	98-00	Y	1	11516402
8.		N.S.	RIVET, BRK PIPE CLIP ANC PLT .				
9.	3-C9	4.686	PLATE, BRK PIPE CLIP ANC (INCLS STUD) (3.162)	98-00	Y	1	10402723
10.	3-C9	4.686	SEAL, BRK PIPE CLIP ANC PLT (15.222)	98-00	Y	1	10415038
11.		8.917	NUT, HEX W/CON WA 6X1X5.5 16-OD ZP 9 (BRK PIPE CLIP)	98-00		1	11517293
12.	3-C9	4.686	CLIP, FRT BRK PIPE (TWO-TUBE, SNAP-IN, XMAS TREE TYPE, W/PRONG)	98-00	Y	3	10289874
13.	3-C9	4.686	CLIP, FRT BRK PIPE (TWO-TUBE, ADHESIVE BACKED)	98-00	Y	2	10289872
14.	3-C14	4.785	RETAINER, BRK PIPE CLIP BOLT (PUSH ON)	98-00	Y	1	10276217
15.	3-C9	4.686	RETAINER, BRK PIPE	98	Y (JAG)	1	10289873
	3-C9	4.686	RETAINER, BRK PIPE	99-00	Y	1	10289873
16.	3-C9	4.686	CLIP, RR BRK C/OVR PIPE (2 SLOT) (21.5X10.0MM)	98	Y (JAG)	2	25607191
	3-C9	4.686	CLIP, RR BRK C/OVR PIPE (2 SLOT) (21.5X10.0MM)	99-00	Y	2	25607191
17.	3-C9	4.686	RETAINER, RR BRK PIPE	98-00	Y	2	10407022
18.	3-C9	4.686	CLIP, FRT BRK PIPE (THREE-TUBE, FLOAT)	98-00	Y	1	10289907
19.	3-C6	4.665	BOLT, RR BRK CLPR (M14X2X47)	98-00	Y	4	14084051
20.	3-C6	4.665	WASHER, RR BRK CLPR (28MM OD X 15.75MM ID)	98-00	Y	4	14080254
21.	3-C7	4.667	CALIPER KIT, RR BRK (AC-DELCO #172-2221)	98-00	Y	RH	12530684
	3-C7	4.667	CALIPER KIT, RR BRK (AC-DELCO #172-2222)	98-00	Y	LH	12530685
22.	3-D17	5.809	ROTOR, RR BRK (1 PC CAST IRON) (AC-DELCO #177-855) .	98-00	Y	RH	10445858
	3-D17	5.809	ROTOR, RR BRK (1 PC CAST IRON) (AC-DELCO #177-854) .	98-00	Y	LH	10445859
23.	3-C8	4.680	HOSE, RR BRK	98-00	Y	2	22163402
24.	3-C8	4.681	GASKET, RR BRK HOSE FTG (10.3X14.5X1.61) (COPPER) (AC--DELCO #21012386)	98-00	Y	4	21012386
25.	3-C8	4.671	FITTING, RR BRK HOSE (4.686) .	98-00	Y	2	22163795
26.		8.900	BOLT/SCREW, HEX W/FL WA 17 OD, M6X1X20, 9.8, 4345M, DOG PT (RR BRK HOSE BRKT)	98-00		2	11515704
27.	3-C8	4.681	BRACKET, RR BRK HOSE	98-00	Y	2	10281416

cardiagn.com

						1Y04-052	
28.		8.900	BOLT/SCREW, HEX W/FL WA 17 OD, M6X1X20, 9.8, 4345M, DOG PT (FRT BRK HOSE BRKT)	98-00	.....	2	11515704
29.	3-C8	4.680	HOSE, FRT BRK	98-00	Y	2	22163727
30.	3-C9	4.686	GASKET, FRT BRK HOSE FTG (10.3X14.5X1.61) (COPPER) (4.681) (AC-DELCO #21012386)	98-00	Y	4	21012386
31.	3-C9	4.686	FITTING, FRT BRK HOSE	98-00	Y	2	22163795
32.	3-C8	4.681	BRACKET, FRT BRK HOSE	98-00	Y	2	10281416
33.	3-C7	4.667	CALIPER KIT, FRT BRK (AC-DELCO #172-2219)	98-00	Y	RH	12530682
	3-C7	4.667	CALIPER KIT, FRT BRK (AC-DELCO #172-2220)	98-00	Y	LH	12530683
34.	3-D17	5.809	ROTOR, FRT BRK (1 PC CAST IRON) (AC-DELCO #177-853) .	98-00	Y	RH	10445856
	3-D17	5.809	ROTOR, FRT BRK (1 PC CAST IRON) (AC-DELCO #177-852) .	98-00	Y	LH	10445857
35.	3-C6	4.665	BOLT, FRT BRK CLPR (M14X2X47)	98-00	Y	4	14084051
36.	3-C6	4.665	WASHER, FRT BRK CLPR (28MM OD X 15.75MM ID)	98-00	Y	4	14080254
37.		8.965	TUBING, BULK (STEEL) 3/16X20 FT ROLL (FRT BRK) (8.964)	98-00	Y	AR	12547207
38.		8.963	NUT , FLRD TUBE, M10X1X17.3, 4.75 TUBE, 7113M (FRT BRK PIPE)	98-00	Y	1	11516402
39.		8.963	NUT , FLRD TUBE, M10X1X17.3, 4.75 TUBE. 7113M (FRT BRK PIPE)	98-00	Y	1	11516402
40.		8.965	TUBING, BULK (STEEL) 3/16X20 FT ROLL (FRT BRK) (8.964)	98-00	Y	AR	12547207
41.		8.963	NUT, M12X1X17.6, LCS, ZE, 4.75 TUBE OD, 35 DEG (FRT BRK PIPE) (8.924)	98-00	Y	1	11516404
42.		8.963	NUT , FLRD TUBE, M10X1X17.3, 4.75 TUBE, 7113M (FRT BRK PIPE)	98-00	Y	1	11516402
43.		8.965	TUBING, BULK (STEEL) 3/16X20 FT ROLL (BRK PRESS MOD VLV M/CYL RSVR) (8.964)	98-00	Y	AR	12547207
44.		8.963	NUT, M12X1X17.6, LCS, ZE, 4.75 TUBE OD, 35 DEG (RR BRK PIPE) (8.924)	98-00	Y	1	11516404
45.	3-C9	4.686	FITTING, RR BRK PIPE (HEX 5.00 TUBE M10X1) (3.163)	98-00	Y	1	14100427
46.		8.963	NUT , FLRD TUBE, M10X1X17.3, 4.75 TUBE, 7113M (RR BRK PIPE)	98-00	Y	1	11516402
47.		8.963	NUT , FLRD TUBE, M10X1X17.3, 4.75 TUBE, 7113M (RR BRK PIPE)	98-00	Y	1	11516402
48.	3-C13	4.730	VALVE, BRK PRESS MOD (AC-DELCO #12530740)	98	Y (JAG) (EXC JL4)	1	12530740
	3-C13	4.730	VALVE, BRK PRESS MOD (AC-DELCO #12530740)	99-00	Y (JL9) (EXC JL4)	1	12530740
	3-C13	4.730	VALVE, BRK PRESS MOD (AC-DELCO #12530740)	00	Y07 (T86) (EXC JL4) ...	1	12530740

cardiagn.com

							1Y04-052
49.	3-C11	4.720	MODULE, ELEK BRK CONT (AC-DELCO #9367071)	98	Y07-67 (EXC JL4)	1	9367071
	3-C11	4.720	MODULE, ELEK BRK CONT (AC-DELCO #9367071)	99-00	Y07-67 (JL9) (EXC JL4)	1	9367071
	3-C11	4.720	MODULE, ELEK BRK CONT (AC-DELCO #9367071)	99	Y37 (JL9, NV7, Z19) (EXC JL4)	1	9367071
	3-C11	4.720	MODULE, ELEK BRK CONT (AC-DELCO #09378853)	99	Y37 (JL9) (EXC NV7) ..	1	9378853
50.	3-C6	4.650	CYLINDER, BRK MAS (AC-DELCO #174-747)	98-00	Y	1	18026278
51.	3-C14	4.901	BOOSTER, P/B (AC-DELCO #178-638)	98-00	Y	1	18026035
	3-C14	4.805	BOOSTER, P/B (4.901) (AC-DELCO #178-638)	98-00	Y	1	18026035
52.	3-C14	4.931	HOSE, P/B BOOS VAC	98-00	Y	1	10255124
53.	3-C9	4.685	PIPE, BRK PRESS MOD VLV M/CYL RSVR RR (INCLS 54, 55) .	98	Y (JAG) (EXC JL4)	1	10413369
	3-C9	4.685	PIPE, BRK PRESS MOD VLV M/CYL RSVR RR (INCLS 54, 55) .	99-00	Y (EXC JL4)	1	10413369
54.		8.963	NUT, INV FLD TUBE, M12X1.5X12.5 THD, FOR 6 OD TUBE, 20.6 TL, LCS, ZC (PART OF 53)	98-00	Y	1	11515504
55.		8.924	NUT-METRIC MALE MUSHROOM FLARED TUBE (PART OF 53)	98-00	Y	1	11516405
56.	3-C6	4.652	VALVE, BRK PROPN RR	98	Y	1	10279616
	3-C6	4.652	VALVE, BRK PROPN RR	99-00	Y (EXC JL4)	1	10279616
57.		8.964	PIPE, 6.0M X 0.7M, 25' ROLL, CTL (BRK PROPN VLV)	98-00	Y	AR	12300088
58.		8.924	NUT-METRIC MALE MUSHROOM FLARED TUBE (BRK PRESS MOD VLV RR BRK PIPE)	98-00	Y	2	11516405
59.	3-C9	4.685	PIPE, BRK PRESS MOD VLV M/CYL RSVR FRT (INCLS 60, 61)	98	Y (JAG) (EXC JL4)	1	10413370
	3-C9	4.685	PIPE, BRK PRESS MOD VLV M/CYL RSVR FRT (INCLS 60, 61)	99-00	Y (EXC JL4)	1	10413370
60.		8.963	NUT, INV FLD TUBE, M12X1.5X12.5 THD, FOR 6 OD TUBE, 20.6 TL, LCS, ZC (PART OF 59)	98-00	Y	1	11515504
61.		8.924	NUT-METRIC MALE MUSHROOM FLARED TUBE (PART OF 59)	98-00	Y	1	11516405

RPO DEFINITIONS
JAG – BRAKE PROVISIONS ABS LOCATION
JL4 – CONTROL ACTIVE BRAKE
JL9 – BRAKE SYSTEM,POWER,FRONT AND REAR DISC,ANTILOCK
NV7 – STEERING,POWER,VARIABLE EFFORT
T86 – LAMP TAIL & STOP, EXPORT
Z19 – PERFORMANCE PKG COUPE

cardiagn.com

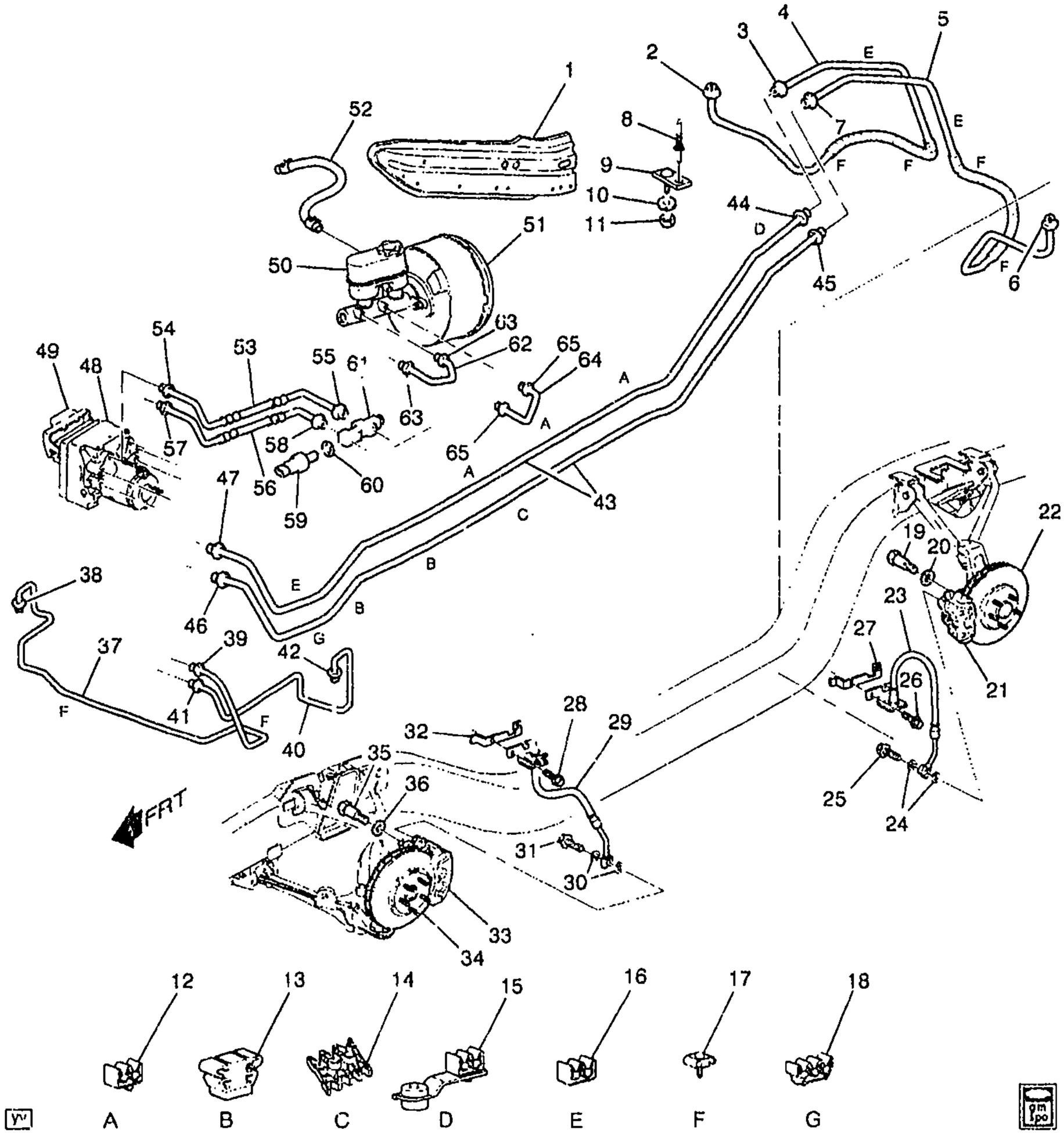

1Y04-053

1998 Y BRAKE HOSES & PIPES (JAG,JL4)
1999-2000 Y BRAKE HOSES & PIPES (JL4)

1.	3-N26	12.980	BRACE, FLR PNL TUN FRT	98-00	Y	RH	10293680
	3-N26	12.980	BRACE, FLR PNL TUN FRT	98-00	Y	LH	10444631
2.		8.963	NUT , FLRD TUBE, M10X1X17.3, 4.75 TUBE, 7113M (RR BRK C/OVR PIPE)	98-00	Y	1	11516402

cardiagn.com

							1Y04-053
3.	3-C9	4.686	FITTING, RR BRK C/OVR PIPE (HEX 5.00 TUBE M10X1) (3.163) .	98-00	Y	1	14100427
4.		8.965	TUBING, BULK (STEEL) 3/16X20 FT ROLL (RR BRK C/OVR) (8.964)	98-00	Y	AR	12547207
5.		8.965	TUBING, BULK (STEEL) 3/16X20 FT ROLL (RR BRK C/OVR) (8.964)	98-00	Y	AR	12547207
6.		8.963	NUT , FLRD TUBE, M10X1X17.3, 4.75 TUBE, 7113M (RR BRK C/OVR PIPE)	98-00	Y	1	11516402
7.		8.963	NUT , FLRD TUBE, M10X1X17.3, 4.75 TUBE, 7113M (RR BRK C/OVR PIPE)	98-00	Y	1	11516402
8.		N.S.	RIVET, BRK PIPE CLIP ANC PLT .				
9.	3-C9	4.686	PLATE, BRK PIPE CLIP ANC (INCLS STUD) (3.162)	98-00	Y	1	10402723
10.	3-C9	4.686	SEAL, BRK PIPE CLIP ANC PLT (15.222)	98-00	Y	1	10415038
11.		8.917	NUT, HEX W/CON WA 6X1X5.5 16-OD ZP 9 (BRK PIPE CLIP)	98-00		1	11517293
12.	3-C9	4.686	CLIP, FRT BRK PIPE (TWO-TUBE, SNAP-IN, XMAS TREE TYPE, W/PRONG)	98-00	Y	3	10289874
13.	3-C9	4.686	CLIP, FRT BRK PIPE (TWO-TUBE, ADHESIVE BACKED)	98-00	Y	2	10289872
14.	3-C14	4.785	RETAINER, BRK PIPE CLIP BOLT (PUSH ON)	98-00	Y	1	10276217
15.	3-C9	4.686	RETAINER, BRK PIPE	98	Y (JAG)	1	10289873
	3-C9	4.686	RETAINER, BRK PIPE	99-00	Y	1	10289873
16.	3-C9	4.686	CLIP, RR BRK C/OVR PIPE (2 SLOT) (21.5X10.0MM)	98	Y (JAG)	2	25607191
	3-C9	4.686	CLIP, RR BRK C/OVR PIPE (2 SLOT) (21.5X10.0MM)	99-00	Y	2	25607191
17.	3-C9	4.686	RETAINER, RR BRK PIPE	98-00	Y	2	10407022
18.	3-C9	4.686	CLIP, FRT BRK PIPE (THREE-TUBE, FLOAT)	98-00	Y	1	10289907
19.	3-C6	4.665	BOLT, RR BRK CLPR (M14X2X47)	98-00	Y	4	14084051
20.	3-C6	4.665	WASHER, RR BRK CLPR (28MM OD X 15.75MM ID)	98-00	Y	4	14080254
21.	3-C7	4.667	CALIPER KIT, RR BRK (AC-DELCO #172-2221)	98-00	Y	RH	12530684
	3-C7	4.667	CALIPER KIT, RR BRK (AC-DELCO #172-2222)	98-00	Y	LH	12530685
22.	3-D17	5.809	ROTOR, RR BRK (1 PC CAST IRON) (AC-DELCO #177-855) .	98-00	Y	RH	10445858
	3-D17	5.809	ROTOR, RR BRK (1 PC CAST IRON) (AC-DELCO #177-854) .	98-00	Y	LH	10445859
23.	3-C8	4.680	HOSE, RR BRK	98-00	Y	2	22163402
24.	3-C8	4.681	GASKET, RR BRK HOSE FTG (10.3X14.5X1.61) (COPPER) (AC-DELCO #21012386)	98-00	Y	4	21012386
25.	3-C8	4.671	FITTING, RR BRK HOSE (4.686) .	98-00	Y	2	22163795
26.		8.900	BOLT/SCREW, HEX W/FL WA 17 OD, M6X1X20, 9.8, 1345M, DOG PT (RR BRK HOSE BRKT)	98-00		2	11515704
27.	3-C8	4.681	BRACKET, RR BRK HOSE	98-00	Y	2	10281416

cardiagn.com

						1Y04-053	
28.		8.900	BOLT/SCREW, HEX W/FL WA 17 OD, M6X1X20, 9.8, 4345M, DOG PT (FRT BRK HOSE BRKT)	98-00	.....	2	11515704
29.	3-C8	4.680	HOSE, FRT BRK	98-00	Y	2	22163727
30.	3-C9	4.686	GASKET, FRT BRK HOSE FTG (10.3X14.5X1.61) (COPPER) (4.681) (AC-DELCO #21012386)	98-00	Y	4	21012386
31.	3-C9	4.686	FITTING, FRT BRK HOSE	98-00	Y	2	22163795
32.	3-C8	4.681	BRACKET, FRT BRK HOSE	98-00	Y	2	10281416
33.	3-C7	4.667	CALIPER KIT, FRT BRK (AC-DELCO #172-2219)	98-00	Y	RH	12530682
	3-C7	4.667	CALIPER KIT, FRT BRK (AC-DELCO #172-2220)	98-00	Y	LH	12530683
34.	3-D17	5.809	ROTOR, FRT BRK (1 PC CAST IRON) (AC-DELCO #177-853) .	98-00	Y	RH	10445856
	3-D17	5.809	ROTOR, FRT BRK (1 PC CAST IRON) (AC-DELCO #177-852) .	98-00	Y	LH	10445857
35.	3-C6	4.665	BOLT, FRT BRK CLPR (M14X2X47)	98-00	Y	4	14084051
36.	3-C6	4.665	WASHER, FRT BRK CLPR (28MM OD X 15.75MM ID)	98-00	Y	4	14080254
37.		8.965	TUBING, BULK (STEEL) 3/16X20 FT ROLL (FRT BRK) (8.964)	98-00	Y	AR	12547207
38.		8.963	NUT , FLRD TUBE, M10X1X17.3, 4.75 TUBE, 7113M (FRT BRK PIPE)	98-00	Y	1	11516402
39.		8.963	NUT , FLRD TUBE, M10X1X17.3, 4.75 TUBE, 7113M (FRT BRK PIPE)	98-00	Y	1	11516402
40.		8.965	TUBING, BULK (STEEL) 3/16X20 FT ROLL (FRT BRK) (8.964)	98-00	Y	AR	12547207
41.		8.963	NUT, M12X1X17.6, LCS, ZE, 4.75 TUBE OD, 35 DEG (FRT BRK PIPE) (8.924)	98-00	Y	1	11516404
42.		8.963	NUT , FLRD TUBE, M10X1X17.3, 4.75 TUBE, 7113M (FRT BRK PIPE)	98-00	Y	1	11516402
43.		8.965	TUBING, BULK (STEEL) 3/16X20 FT ROLL (BRK PRESS MOD VLV M/CYL RSVR) (8.964)	98-00	Y	AR	12547207
44.		8.963	NUT, M12X1X17.6, LCS, ZE, 4.75 TUBE OD, 35 DEG (RR BRK PIPE) (8.924)	98-00	Y	1	11516404
45.	3-C9	4.686	FITTING, RR BRK PIPE (HEX 5.00 TUBE M10X1) (3.163)	98-00	Y	1	14100427
46.		8.963	NUT , FLRD TUBE, M10X1X17.3, 4.75 TUBE, 7113M (RR BRK PIPE)	98-00	Y	1	11516402
47.		8.963	NUT , FLRD TUBE, M10X1X17.3, 4.75 TUBE, 7113M (RR BRK PIPE)	98-00	Y	1	11516402
48.	3-C13	4.730	VALVE, BRK PRESS MOD (AC-DELCO #10417038)	98-00	Y (JL4)	1	10417038
	3-C13	4.730	VALVE, BRK PRESS MOD (AC-DELCO #12530740)	99-00	Y (JL9) (EXC JL4)	1	12530740
	3-C13	4.730	VALVE, BRK PRESS MOD (AC-DELCO #12530740)	00	Y07 (T86) (EXC JL4) ...	1	12530740

cardiagn.com

							1Y04-053
49.	3-C11	4.720	MODULE, ELEK BRK & TRACT CONT (AC-DELCO #09376711) .	98	Y (JAG, JL4, JL9)	1	9376711
	3-C11	4.720	MODULE, ELEK BRK CONT (AC-DELCO #9367071)	99-00	Y07-67 (JL9) (EXC JL4)	1	9367071
	3-C11	4.720	MODULE, ELEK BRK CONT (AC-DELCO #09376711)	99-00	Y (JL4, JL9)	1	9376711
	3-C11	4.720	MODULE, ELEK BRK CONT (AC-DELCO #9367071)	99	Y37 (JL9, NV7, Z19) (EXC JL4)	1	9367071
	3-C11	4.720	MODULE, ELEK BRK CONT (AC-DELCO #09378853)	99	Y37 (JL9) (EXC NV7) ..	1	9378853
50.	3-C6	4.650	CYLINDER, BRK MAS (AC-DELCO #174-747)	98-00	Y	1	18026278
51.	3-C14	4.901	BOOSTER, P/B (AC--DELCO #178-638)	98-00	Y	1	18026035
	3-C14	4.805	BOOSTER, P/B (4.901) (AC--DELCO #178-638)	98-00	Y	1	18026035
52.	3-C14	4.931	HOSE, P/B BOOS VAC	98-00	Y	1	10255124
53.	3-C9	4.685	PIPE, RR BRK COMB VLV (INCLS 54, 55)	98	Y (JAG, JL4)	1	10290018
	3-C9	4.685	PIPE, RR BRK COMB VLV (INCLS 54, 55)	99-00	Y (JL4)	1	10290018
54.		8.963	NUT, INV FLD TUBE, M12X1.5X12.5 THD, FOR 6 OD TUBE, 20.6 TL, LCS, ZC (PART OF 53)	98-00	Y	1	11515504
55.		8.924	NUT-METRIC MALE MUSHROOM FLARED TUBE (PART OF 53)	98-00	Y	1	11516405
56.	3-C9	4.685	PIPE, FRT BRK COMB VLV (INCLS 57, 58)	98	Y (JAG, JL4)	1	10416131
	3-C9	4.685	PIPE, FRT BRK COMB VLV (INCLS 57, 58)	99-00	Y (JL4)	1	10416131
57.		8.924	NUT-METRIC MALE MUSHROOM FLARED TUBE (FRT BRK COMB VLV) (PART OF 56)	98-00	Y	1	11516405
58.		8.924	NUT-METRIC MALE MUSHROOM FLARED TUBE (FRT BRK COMB VLV) (PART OF 56)	98-00	Y	1	11516405
59.	3-C10	4.710	SENSOR, BRK PRESS MOD VLV PRESS	98	Y (JAG, JL4)	1	10411078
	3-C10	4.710	SENSOR, BRK PRESS MOD VLV PRESS	99-00	Y (JL4)	1	10411078
60.	3-C10	4.690	SEAL, BRK PRESS DIFF SW (O RING) (4.685)	98	Y (JAG, JL4)	1	10400741
	3-C10	4.690	SEAL, BRK PRESS DIFF SW (O RING) (4.685)	99-00	Y (JL4)	1	10400741
61.	3-C10	4.690	VALVE, BRK COMB (AC-DELCO #172-2247)	98	Y (JAG, JL4)	1	10293376
	3-C10	4.690	VALVE, BRK COMB (AC-DELCO #172-2247)	99-00	Y (JL4)	1	10293376
62.		8.964	PIPE, 6.0M X 0.7M, 25' ROLL, CTL (RR BRK COMB VLV)	98-00	Y	AR	12300088
63.		8.924	NUT-METRIC MALE MUSHROOM FLARED TUBE (RR BRK COMB VLV PIPE)	98-00	Y	2	11516405

cardiagn.com

						1Y04-053
64.	8.964	PIPE, 6.0M X 0.7M, 25' ROLL, CTL (FRT BRK COMB VLV)	98-00	Y	AR	12300088
65.	8.963	NUT, INV FLD TUBE, M12X1.5X12.5 THD, FOR 6 OD TUBE, 20.6 TL, LCS, ZC (FRT BRK COMB VLV PIPE)	98-00	Y	2	11515504

RPO DEFINITIONS

JAG – BRAKE PROVISIONS ABS LOCATION
JL4 – CONTROL ACTIVE BRAKE
JL9 – BRAKE SYSTEM,POWER,FRONT AND REAR DISC,ANTILOCK
NV7 – STEERING,POWER,VARIABLE EFFORT
T86 – LAMP TAIL & STOP, EXPORT
Z19 – PERFORMANCE PKG COUPE

cardiagn.com

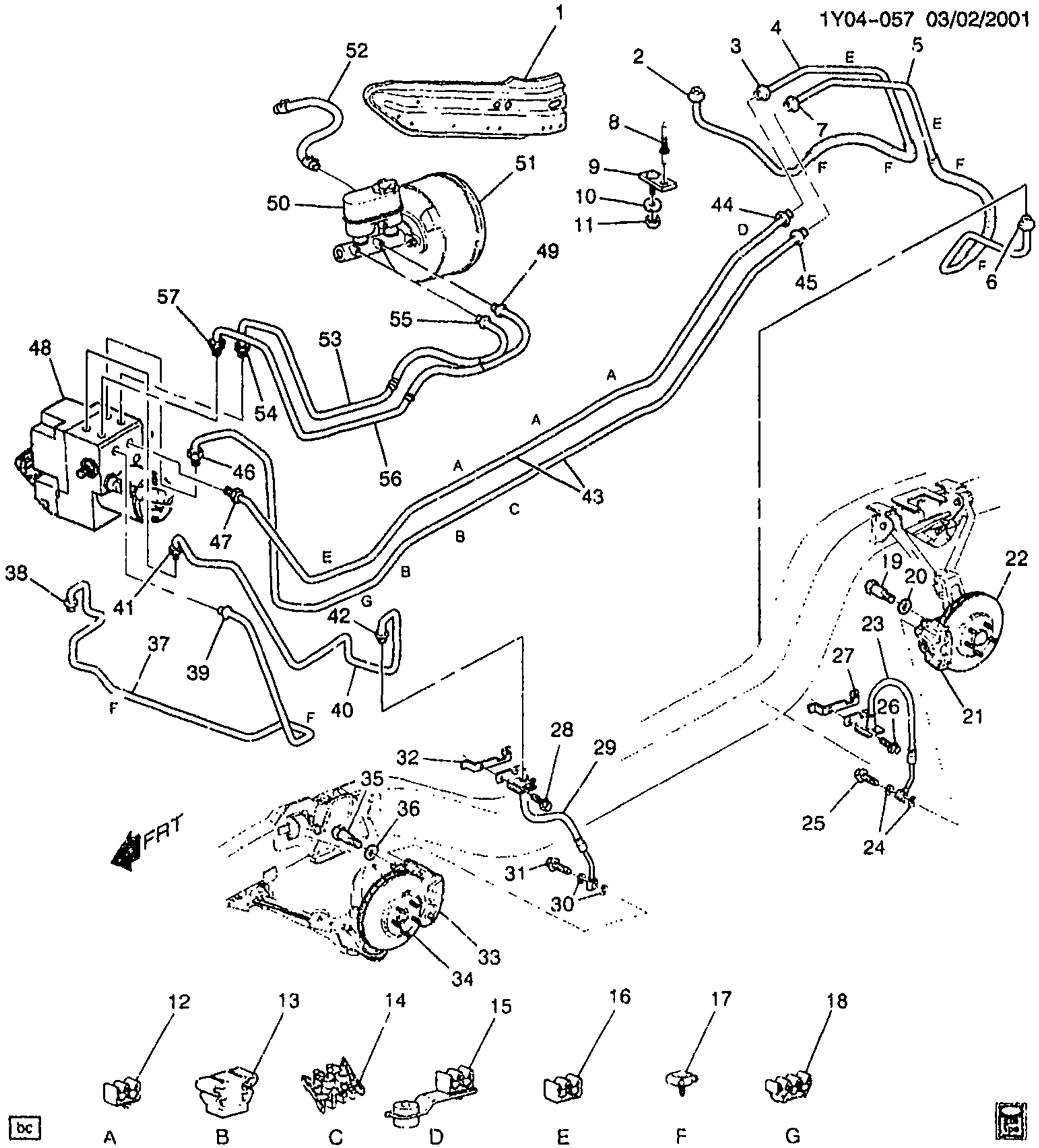

1Y04-057

2001-2002 Y BRAKE HOSES & PIPES

1.	3-N26	12.980	BRACE, FLR PNL TUN FRT	01	Y	RH	10293680
	3-N26	12.980	BRACE, FLR PNL TUN FRT	01	Y	LH	10444631
	3-N26	12.980	BRACE, FLR PNL TUN FRT (#35)	02	Y	RH	10438452
	3-N26	12.980	BRACE, FLR PNL TUN FRT (#35)	02	Y	LH	10438453

cardiagn.com

							1Y04-057
2.		8.963	NUT, FLRD TUBE, M10X1X17.3, 4.75 TUBE, 7113M (RR BRK C/OVR PIPE)	01-02	Y	1	11516402
3.	3-C9	4.686	FITTING, RR BRK C/OVR PIPE (HEX 5.00 TUBE M10X1) (3.163)	01-02	Y	1	14100427
4.		8.965	TUBING, BULK (STEEL) 3/16X20 FT ROLL (RR BRK C/OVR) (8.964)	01-02	Y	AR	12547207
5.		8.965	TUBING, BULK (STEEL) 3/16X20 FT ROLL (RR BRK C/OVR) (8.964)	01-02	Y	AR	12547207
6.		8.963	NUT, FLRD TUBE, M10X1X17.3, 4.75 TUBE, 7113M (RR BRK C/OVR PIPE)	01-02	Y	1	11516402
7.		8.963	NUT, FLRD TUBE, M10X1X17.3, 4.75 TUBE, 7113M (RR BRK C/OVR PIPE)	01-02	Y	1	11516402
8.		N.S.	RIVET, BRK PIPE CLIP ANC PLT				
9.	3-C9	4.686	PLATE, BRK PIPE CLIP ANC (INCLS STUD) (3.162)	01-02	Y	1	10402723
10.		N.S.	SEALER, BRK PIPE CLIP ANC PLT	01-02			
11.		8.917	NUT, HEX W/CON WA 6X1X5.5 16-OD ZP 9 (BRK PIPE CLIP)	01-02		1	11517283
12.	3-C9	4.686	CLIP, FRT BRK PIPE (TWO-TUBE, SNAP-IN, XMAS TREE TYPE, W/PRONG)	01-02	Y	3	10289874
13.	3-C9	4.686	CLIP, FRT BRK PIPE (TWO-TUBE, ADHESIVE BACKED)	01-02	Y	2	10289872
14.	3-C14	4.785	RETAINER, BRK PIPE CLIP BOLT (PUSH ON)	01-02	Y	1	10276217
15.	3-C9	4.686	RETAINER, BRK PIPE	01-02	Y	1	10289873
16.	3-C9	4.686	CLIP, RR BRK C/OVR PIPE (2 SLOT) (21.5X10.0MM)	01-02	Y	2	25607191
17.	3-C9	4.686	RETAINER, RR BRK PIPE	01-02	Y	2	10407022
18.	3-C9	4.686	CLIP, FRT BRK PIPE (THREE-TUBE, FLOAT)	01-02	Y	1	10289907
19.	3-C6	4.665	BOLT, RR BRK CLPR (M14X2X47)	01-02	Y	4	14084051
20.	3-C6	4.665	WASHER, RR BRK CLPR (28MM OD X 15 75MM ID)	01-02	Y	4	14080254
21.	3-C7	4.667	CALIPER KIT, RR BRK (AC-DELCO #172-2221)	01	Y07-67 (JL9)	RH	12530684
	3-C7	4.667	CALIPER KIT, RR BRK (AC-DELCO #172-2222)	01	Y07-67 (JL9)	LH	12530685
	3-C7	4.667	CALIPER KIT, RR BRK (AC-DELCO #172-2265)	01-02	Y37 (JL9)	LH	88895130
	3-C7	4.667	CALIPER KIT, RR BRK (AC-DELCO #172-2266)	01-02	Y37 (JL9)	RH	88895131
	3-C7	4.667	CALIPER KIT, RR BRK (AC-DELCO #172-2221)	02	Y07-67 (JL9) (EXC T2F)	RH	12530684
	3-C7	4.667	CALIPER KIT, RR BRK (AC-DELCO #172-2222)	02	Y07-67 (JL9) (EXC T2F)	LH	12530685
	3-C7	4.667	CALIPER KIT, RR BRK (AC-DELCO #172-2265)	02	Y07-67 (JL9, T2F)	LH	88895130
	3-C7	4.667	CALIPER KIT, RR BRK (AC-DELCO #172-2266)	02	Y07-67 (JL9, T2F)	RH	88895131

cardiagn.com

							1Y04-057
22.	3-D17	5.809	ROTOR, RR BRK (1 PC CAST IRON) (AC-DELCO #177-855) .	01-02	Y	RH	10445858
	3-D17	5.809	ROTOR, RR BRK (1 PC CAST IRON) (AC-DELCO #177-854) .	01-02	Y	LH	10445859
23.	3-C8	4.680	HOSE, RR BRK	01-02	Y	2	22163402
24.	3-C8	4.681	GASKET, RR BRK HOSE FTG (10.3X14.5X1.61) (COPPER) (AC-DELCO #21012386)	01-02	Y	4	21012386
25.	3-C8	4.671	FITTING, RR BRK HOSE (4.686) .	01	Y	2	22163795
	3-C8	4.671	FITTING, RR BRK HOSE (M10X1.0X27.5, 16.5 TH) (HX FLG (BANGO)) (4.686)	01-02	Y	2	11518571
26.		8.900	BOLT/SCREW, HEX W/FL WA 17 OD, M6X1X20, 9.8, 4345M, DOG PT (RR BRK HOSE BRKT)	01-02		2	11515704
27.	3-C8	4.681	BRACKET, RR BRK HOSE	01-02	Y	2	10281416
28.		8.900	BOLT/SCREW, HEX W/FL WA 17 OD, M6X1X20, 9.8, 4345M, DOG PT (FRT BRK HOSE BRKT)	01-02		2	11515704
29.	3-C8	4.680	HOSE, FRT BRK	01-02	Y	2	22163727
30.	3-C9	4.686	GASKET, FRT BRK HOSE FTG (10.3X14.5X1.61) (COPPER) (4.681) (AC-DELCO #21012386)	01-02	Y	4	21012386
31.	3-C9	4.686	FITTING, FRT BRK HOSE	01	Y	2	22163795
	3-C9	4.686	FITTING, FRT BRK HOSE (M10X1.0X27.5, 16 5 TH) (HX FLG (BANGO))	01-02	Y	2	11518571
32.	3-C8	4.681	BRACKET, FRT BRK HOSE	01-02	Y	2	10281416
33.	3-C7	4.667	CALIPER KIT, FRT BRK (AC-DELCO #172-2219) . ..	01-02	Y07-67 (JL9)	RH	12530682
	3-C7	4.667	CALIPER KIT, FRT BRK (AC-DELCO #172-2220)	01-02	Y07-67 (JL9)	LH	12530683
	3-C7	4.667	CALIPER KIT, FRT BRK (AC-DELCO #172-2263)	01	Y37 (JL9)	LH	88895128
	3-C7	4.667	CALIPER KIT, FRT BRK (AC-DELCO #172-2264)	01	Y37 (JL9)	RH	88895129
	3-C7	4.667	CALIPER KIT, FRT BRK (AC-DELCO #172-2263)	02	Y (JL9)	LH	88895128
	3-C7	4.667	CALIPER KIT, FRT BRK (AC-DELCO #172-2264)	02	Y (JL9)	RH	88895129
34.	3-D17	5.809	ROTOR, FRT BRK (1 PC CAST IRON) (AC-DELCO #177-853) .	01-02	Y	RH	10445856
	3-D17	5.809	ROTOR, FRT BRK (1 PC CAST IRON) (AC-DELCO #177-852) .	01-02	Y	LH	10445857
35.	3-C6	4.665	BOLT, FRT BRK CLPR (M14X2X47)	01-02	Y	4	14084051
36.	3-C6	4.665	WASHER, FRT BRK CLPR (28MM OD X 15.75MM ID)	01-02	Y	4	14080254
37.		8.965	TUBING, BULK (STEEL) 3/16X20 FT ROLL (FRT BRK) (8.964)	01-02	Y	AR	12547207
38.		8.963	NUT , FLRD TUBE, M10X1X17.3, 4.75 TUBE, 7113M (FRT BRK PIPE)	01-02	Y	1	11516402
39.		8.963	NUT , FLRD TUBE, M10X1X17.3, 4.75 TUBE, 7113M (FRT BRK PIPE)	01-02	Y	1	11516402
40.		8.965	TUBING, BULK (STEEL) 3/16X20 FT ROLL (FRT BRK) (8.964)	01-02	Y	AR	12547207

cardiagn.com

							1Y04-057
41.		8.963	NUT, M12X1X17.6, LCS, ZE. 4.75 TUBE OD, 35 DEG (FRT BRK PIPE) (8.924)	01-02	Y	1	11516404
42.		8.963	NUT , FLRD TUBE, M10X1X17.3, 4.75 TUBE, 7113M (FRT BRK PIPE)	01-02	Y	1	11516402
43.		8.965	TUBING, BULK (STEEL) 3/16X20 FT ROLL (RR BRK INTER) (8.964)	01-02	Y	AR	12547207
44.		8.963	NUT, M12X1X17.6, LCS, ZE, 4.75 TUBE OD, 35 DEG (RR BRK PIPE) (8.924)	01-02	Y	1	11516404
45.	3-C9	4.686	FITTING, RR BRK PIPE (HEX 5.00 TUBE M10X1) (3.163)	01-02	Y	1	14100427
46.		8.963	NUT , FLRD TUBE, M10X1X17.3, 4.75 TUBE, 7113M (RR BRK PIPE)	01-02	Y	1	11516402
47.		8.963	NUT , FLRD TUBE, M10X1X17.3, 4.75 TUBE, 7113M (RR BRK PIPE)	01-02	Y	1	11516402
48.		N.S.	VALVE, BRK PRESS MOD (W/ELEK BRK & TRACT CONT MDL)	01-02			
49.		8.924	NUT-METRIC MALE MUSHROOM FLARED TUBE (FRT BRK COMB VLV) (PART OF 56)	01-02	Y	1	11516405
50.	3-C6	4.650	CYLINDER, BRK MAS (AC-DELCO #174-747)	01-02	Y	1	18026278
51.	3-C14	4.901	BOOSTER, P/B (AC-DELCO #178-662)	01-02	Y	1	18046267
	3-C14	4.805	BOOSTER, P/B (4.901) (AC-DELCO #178-662)	01-02	Y	1	18046267
52.	3-C14	4.931	HOSE, P/B BOOS VAC	01-02	Y	1	10255124
53.	3-C9	4.685	PIPE, BRK PRESS MOD VLV M/CYL RSVR RR (INCLS 54, 55)	01-02	Y	1	10444144
54.		8.963	NUT, INV FLD TUBE, M12X1.5X12.5 THD, FOR 6 OD TUBE, 20.6 TL, LCS, ZC (PART OF 53)	01-02	Y	1	11515504
55.		8.924	NUT-METRIC MALE MUSHROOM FLARED TUBE (PART OF 53)	01-02	Y	1	11516405
56.	3-C9	4.685	PIPE, BRK PRESS MOD VLV M/CYL RSVR FRT (INCLS 57, 58)	01-02	Y	1	10444143
57.		8.924	NUT-METRIC MALE MUSHROOM FLARED TUBE (FRT BRK COMB VLV) (PART OF 56)	01-02	Y	1	11516405

RPO DEFINITIONS
JL9 - BRAKE SYSTEM,POWER,FRONT AND REAR DISC,ANTILOCK
T2F - BRAKE PROVISIONS SPECIAL

cardiagn.com

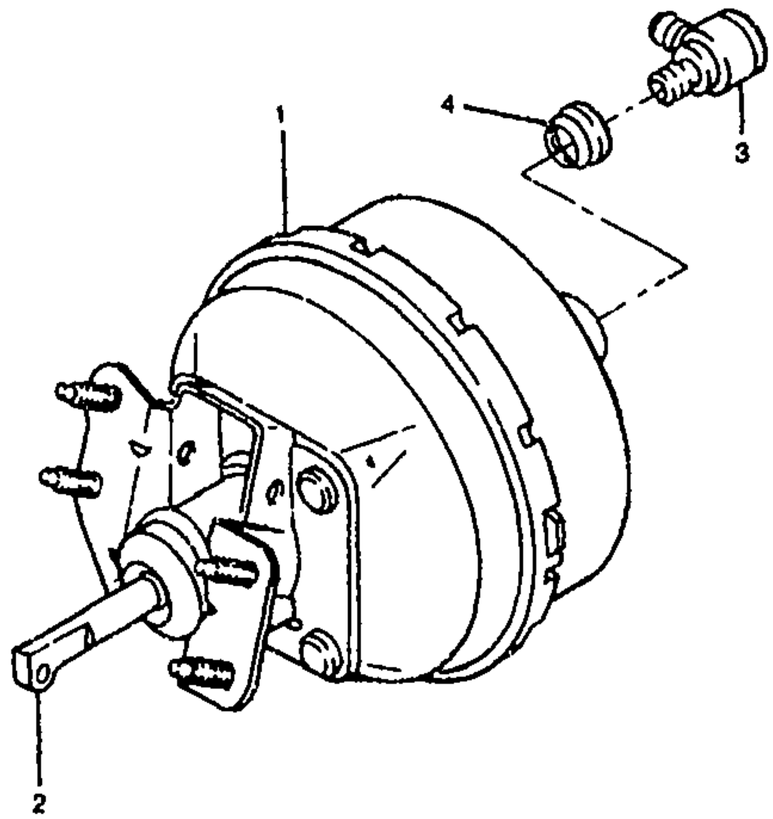

DM2015E002

GM04-423Y

1997-2002 Y BRAKE BOOSTER

1.	3-C14	4.901	BOOSTER, P/B (INCLS 2) (AC-DELCO #178-638)	97-00	Y	1	18026035
	3-C14	4.805	BOOSTER, P/B (INCLS 2) (4.901) (AC-DELCO #178-638)	97-00	Y	1	18026035
	3-C14	4.901	BOOSTER, P/B (INCLS 2) (AC-DELCO #178-662)	01-02	Y	1	18046267
	3-C14	4.805	BOOSTER, P/B (INCLS 2) (4.901) (AC-DELCO #178-662)	01-02	Y	1	18046267
2.		N.S.	ROD, VLV PUSH (PART OF 1) ...		... .		
3.	3-C15	4.955	VALVE KIT, P/B BOOS VAC CHK (INCLS 4) (W/VALVE & GROMMET) (AC-DELCO #179-1266)	97-02	Y	1	18022219
4.	3-C15	4.955	GROMMET, P/B BOOS VAC CHK VLV (PART OF 3)	97-02	Y	1	18060007

cardiagn.com

GM04-376
061190

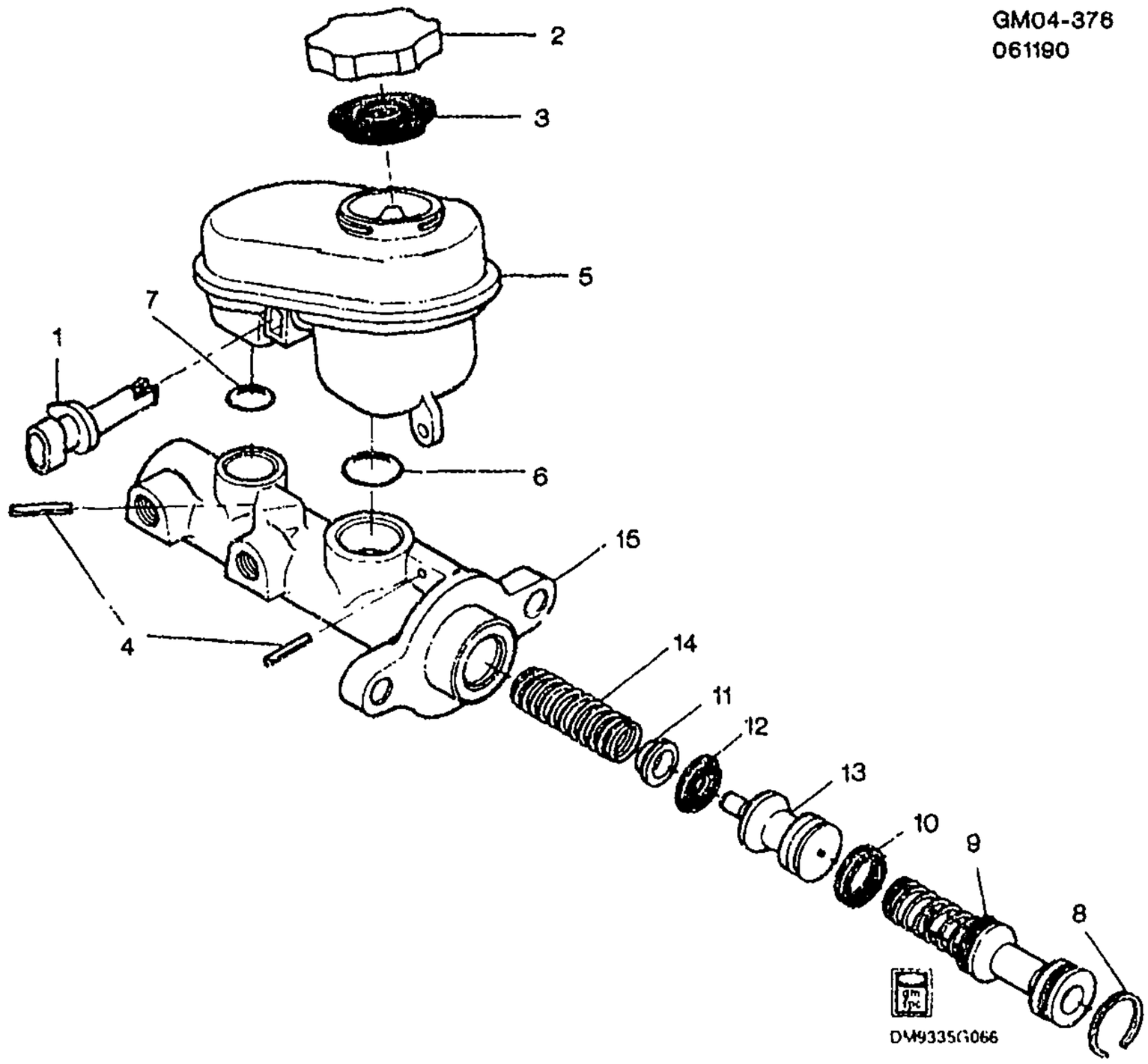

GM04-376Y

1997-2002 Y BRAKE MASTER CYLINDER

1.	3-C6	4.651	SWITCH, BRK FLUID LVL IND (*KIT1)	97-02	Y	1	18029973
2.	3-C6	4.651	CAP, BRK M/CYL RSVR (INCLS 3) (*KIT1)	97-02	Y	1	18060186
3.		N.S.	DIAPHRAGM, BRK M/CYL RSVR (PART OF 2) (*KIT1)				
4.		N.S.	PIN, SPR (PART OF 5) (*KIT1)				
5.	3-C6	4.651	RESERVOIR KIT, BRK M/CYL (INCLS 4, 6, 7) (W/GROM) (*KIT1)	97-02	Y	1	18029858
6.		N.S.	O-RING (PART OF 5) (*KIT1)				
7.		N.S.	O-RING (PART OF 5) (*KIT1)				
8.		N.S.	RETAINER (*KIT1 KIT2)				
9.		N.S.	PISTON, PRIM (*KIT1, KIT2)				
10.		N.S.	SEAL PRIMARY (*KIT1, KIT2)				
11.		N.S.	RETAINER (*KIT1, KIT2)				
12.		N.S.	SEAL, SECD (*KIT1, KIT2)				
13.	3-C6	4.653	PISTON, BRK M/CYL SECD (*KIT1)	97	Y	1	18029857

cardiagn.com

							GM04-376Y
	3-C6	4.653	PISTON, BRK M/CYL SECD (*KIT1)	98-02	Y	1	18026280
14.		N.S.	SPRING (*KIT1)				
15.		N.S.	CYLINDER BODY (*KIT1)				

SERVICE KITS

1.	3-C6	4.650	CYLINDER, BRK MAS (INCLS 1-15) (AC-DELCO #174-743)	97	Y	1	18029860
	3-C6	4.650	CYLINDER, BRK MAS (INCLS 1-15) (AC-DELCO #174-747)	98-02	Y	1	18026278
2.	3-C5	4.649	CYLINDER KIT, BRK MAS (INCLS 8-12) (AC-DELCO #175-431)	97	Y	1	18029859
	3-C5	4.649	CYLINDER KIT, BRK MAS (INCLS 8-12) (4.650) (AC-DELCO #175-433)	98-02	Y	1	18026279

cardiagn.com

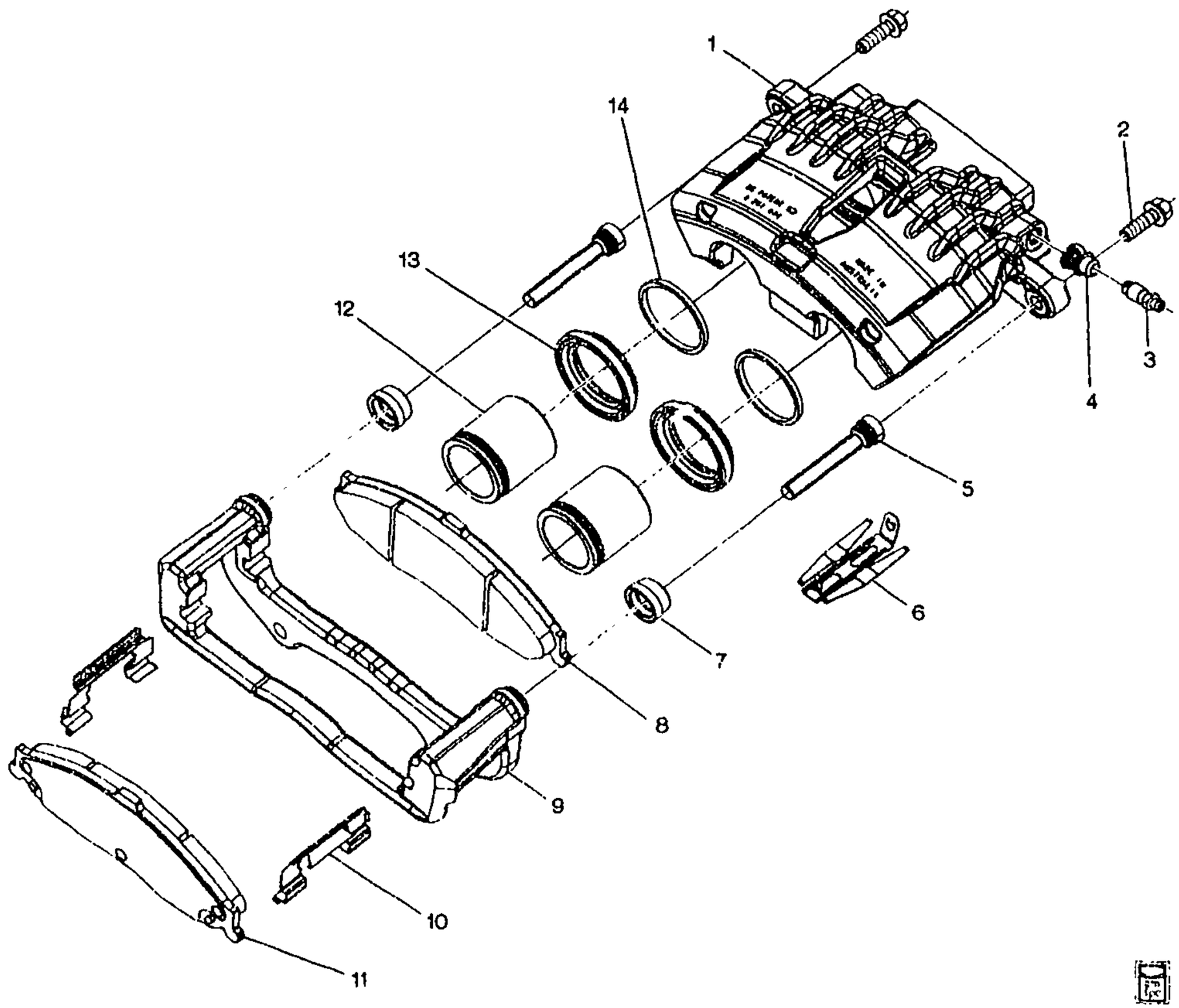

1997-2002 Y BRAKE CALIPER/FRONT

1.		N.S.	HOUSING, FRT BRK CLPR (*KIT1)				
2.	3-C6	4.665	BOLT, FRT BRK CLPR GDE PIN (*KIT1, KIT2, KIT3)	97-02	Y	4	14067559
3.	3-C7	4.666	VALVE, FRT BRK CLPR BLEDR (*KIT1)	97-02	Y	4	14071826
4.	3-C7	4.666	CAP, FRT BRK CLPR BLEDR VLV (REPCO LTD) (STMPD WITH A DOT OF ORANGE PAINT) (*KIT1)	97-02	Y	4	14089150
5.	3-C6	4.665	PIN, FRT BRK CLPR GDE (AC-DELCO #179-2009)	97-02	Y	2	12530697
6.		N.S.	SPRING, FRT BRK SHOE A/RTL (*KIT3)			1	
7.	3-C7	4.667	SEAL, FRT BRK CLPR PSTN (*KIT2)	97-02	Y	4	12530706

cardiagn.com

							TY04-046
8.		N.S.	PAD, FRT DISC BRK INR (*KIT3)				
9.	3-C6	4.665	BRACKET, FRT BRK CLPR STOP	97-02	Y	2	12455799
10.		N.S.	SHIM, FRT BRK PAD (ANTI-NOISE) (*KIT2)			2	
11.		N.S.	PAD, FRT DISC BRK OTR (*KIT3)				
12.	3-C8	4.668	PISTON, FRT BRK CLPR (*KIT1) (4.667) (AC-DELCO #179-2007)	97-02	Y	4	12530705
13.	3-C8	4.670	BOOT, FRT BRK CLPR PSTN (*KIT1, KIT2) (4.668)	97-02	Y	2	12530704
14.	3-C7	4.667	SEAL, FRT BRK CLPR PSTN (*KIT1, KIT2)	97-02	Y	4	12530706

SERVICE KITS

1.	3-C7	4.667	CALIPER KIT, FRT BRK (INCLS 1-4, 12-14) (AC-DELCO #172-2219)	97-00	Y	RH	12530682
	3-C7	4.667	CALIPER KIT, FRT BRK (INCLS 1-4, 12-14) (AC-DELCO #172-2220)	97-00	Y	LH	12530683
	3-C7	4.667	CALIPER KIT, FRT BRK (INCLS 1-4, 12-14) (AC-DELCO #172-2219)	01-02	Y07-67 (JL9)	RH	12530682
	3-C7	4.667	CALIPER KIT, FRT BRK (INCLS 1-4, 12-14) (AC-DELCO #172-2220)	01-02	Y07-67 (JL9)	LH	12530683
	3-C7	4.667	CALIPER KIT, FRT BRK (INCLS 1-4, 12-14) (AC-DELCO #172-2263)	01	Y37 (JL9)	LH	88895128
	3-C7	4.667	CALIPER KIT, FRT BRK (INCLS 1-4, 12-14) (AC-DELCO #172-2264)	01	Y37 (JL9)	RH	88895129
	3-C7	4.667	CALIPER KIT, FRT BRK (INCLS 1-4, 12-14) (AC-DELCO #172-2263)	02	Y (JL9)	LH	88895128
	3-C7	4.667	CALIPER KIT, FRT BRK (INCLS 1-4, 12-14) (AC-DELCO #172-2264)	02	Y (JL9)	RH	88895129
2.	3-C7	4.667	REPAIR KIT, FRT BRK CLPR HYD (INCLS 2, 7, 13, 14)	97-02	Y	2	12530686
3.	3-D8	5.017	PAD KIT, FRT DISC BRK (INCLS 2, 6, 8, 10, 11) (AC-DELCO #171-781)	97-02	Y	1	12530681
	3-D8	5.017	PAD KIT, FRT DISC BRK (INCLS 2, 6, 8, 10, 11)	02	Y37 (JL9)	1	88952008
	3-D8	5.017	PAD KIT, FRT DISC BRK (INCLS 2, 6, 8, 10, 11)	02	Y07-67 (JL9, T2F) (EXPORT)	1	88952008

RPO DEFINITIONS
JL9 - BRAKE SYSTEM,POWER,FRONT AND REAR DISC,ANTILOCK
T2F - BRAKE PROVISIONS SPECIAL

cardiagn.com

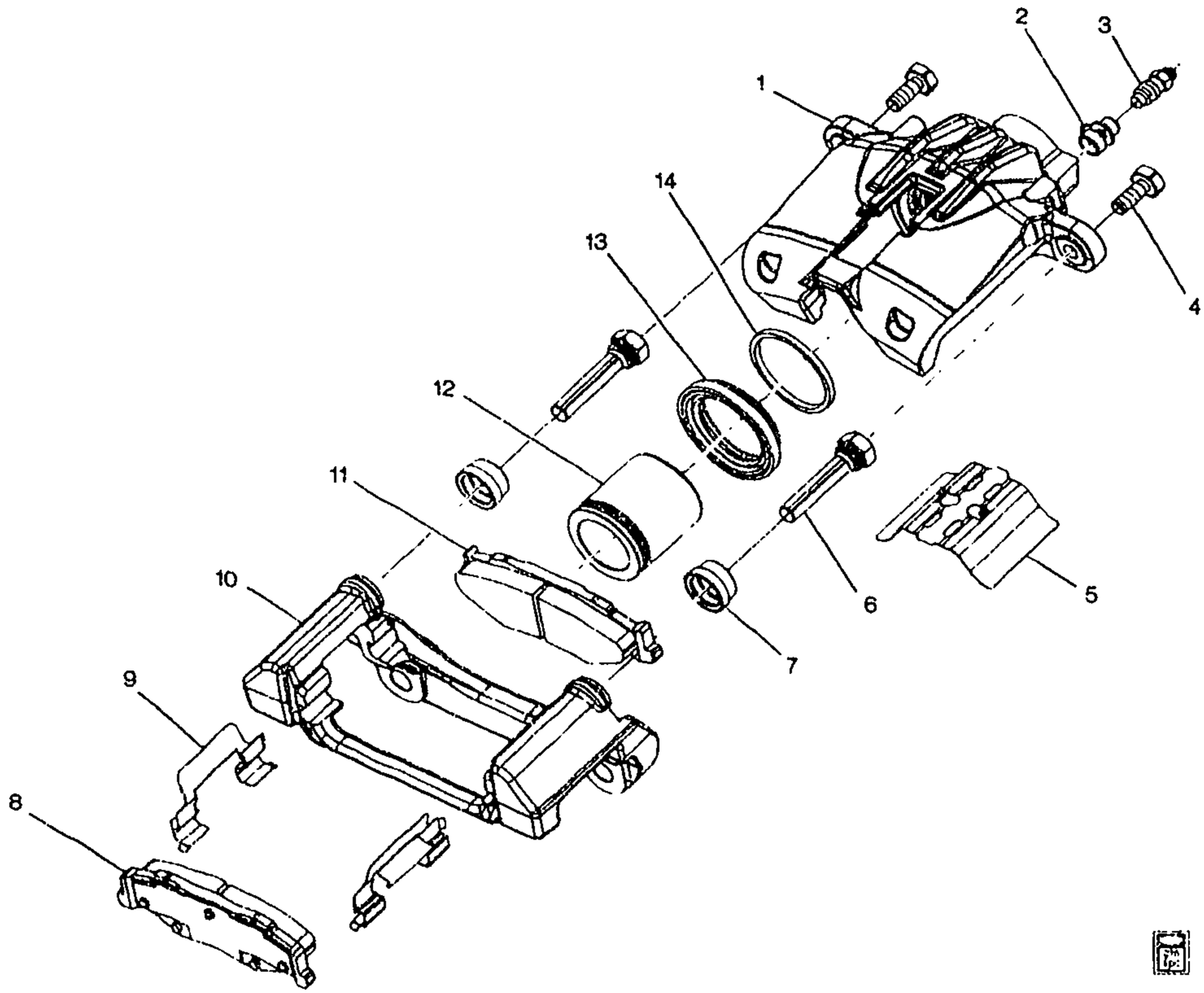

1Y04-045

1997-2002 Y BRAKE CALIPER/REAR

1.		N.S.	CALIPER HOUSING (*KIT1)				
2.	3-C7	4.666	CAP, FRT BRK CLPR BLEDR VLV (REPCO LTD) (STMPD WITH A DOT OF ORANGE PAINT)	97-02	Y	4	14089150
3.	3-C7	4.666	VALVE, RR BRK CLPR BLEDR	97-02	Y	2	14071826
4.	3-C6	4.665	BOLT, RR BRK CLPR (*KIT1, KIT2, KIT3)	97-02	Y	8	14067559
5.		N.S.	SPRING, ANTI RATTLE (*KIT3)				
6.	3-C6	4.665	PIN, RR BRK CLPR GDE (REPCO LTD) (STMPD WITH A DOT OF ORANGE PAINT) (*KIT1) (AC-DELCO #179-2011)	97-02	Y	2	12530698
7.	3-C6	4.665	BOOT, RR BRK CLPR GDE PIN (REPCO LTD) (STMPD WITH A DOT OF ORANGE PAINT) (*KIT1, KIT2) (AC-DELCO #179-2008)	97-02	Y	2	12530703
8.		N.S.	PAD ASM OTR (*KIT3)				
9.		N.S.	SHIM, PAD ABUTMENT (*KIT3)				

cardiagn.com

10.	3-C6	4.665	BRACKET, RR CLPR STOP	97-02	Y	2	12455800
11.		N.S.	PAD ASM INR (*KIT3)				
12.	3-C8	4.668	PISTON, RR BRK CLPR (AC-DELCO #179-2010)	97-02	Y	2	12453509
13.	3-C8	4.670	BOOT, RR BRK CLPR PSTN (*KIT1, KIT2)	97-02	Y	2	12530707
14.	3-C7	4.667	SEAL, RR BRK CYL PSTN (*KIT1, KIT2)	97-98	Y	2	12530709

SERVICE KITS

1.	3-C7	4.667	CALIPER KIT, RR BRK (INCLS 1, 4, 12, 13, 14) (AC-DELCO #172-2221)	97-00	Y	RH	12530684
	3-C7	4.667	CALIPER KIT, RR BRK (INCLS 1, 4, 12, 13, 14) (AC-DELCO #172-2222)	97-00	Y	LH	12530685
	3-C7	4.667	CALIPER KIT, RR BRK (INCLS 1, 4, 12, 13, 14) (AC-DELCO #172-2221)	01	Y07-67 (JL9)	RH	12530684
	3-C7	4.667	CALIPER KIT, RR BRK (INCLS 1, 4, 12, 13, 14) (AC-DELCO #172-2222)	01	Y07-67 (JL9)	LH	12530685
	3-C7	4.667	CALIPER KIT, RR BRK (INCLS 1, 4, 12, 13, 14) (AC-DELCO #172-2265)	01-02	Y37 (JL9)	LH	88895130
	3-C7	4.667	CALIPER KIT, RR BRK (INCLS 1, 4, 12, 13, 14) (AC-DELCO #172-2266)	01-02	Y37 (JL9)	RH	88895131
	3-C7	4.667	CALIPER KIT, RR BRK (INCLS 1, 4, 12, 13, 14) (AC-DELCO #172-2221)	02	Y07-67 (JL9) (EXC T2F)	RH	12530684
	3-C7	4.667	CALIPER KIT, RR BRK (INCLS 1, 4, 12, 13, 14) (AC-DELCO #172-2222)	02	Y07-67 (JL9) (EXC T2F)	LH	12530685
	3-C7	4.667	CALIPER KIT, RR BRK (INCLS 1, 4, 12, 13, 14) (AC-DELCO #172-2265)	02	Y07-67 (JL9, T2F)	LH	88895130
	3-C7	4.667	CALIPER KIT, RR BRK (INCLS 1, 4, 12, 13, 14) (AC-DELCO #172-2266)	02	Y07-67 (JL9, T2F)	RH	88895131
2.	3-C7	4.667	REPAIR KIT, RR BRK CLPR HYD (INCLS 4, 7, 13, 14)	97-02	Y	2	12530687
3.	3-D8	5.017	PAD KIT, RR DISC BRK (INCLS 5, 8, 9, 11) (AC-DELCO #171-782)	97-02	Y	1	12530688

RPO DEFINITIONS
JL9 -- BRAKE SYSTEM,POWER,FRONT AND REAR DISC,ANTILOCK
T2F - BRAKE PROVISIONS SPECIAL

cardiagn.com

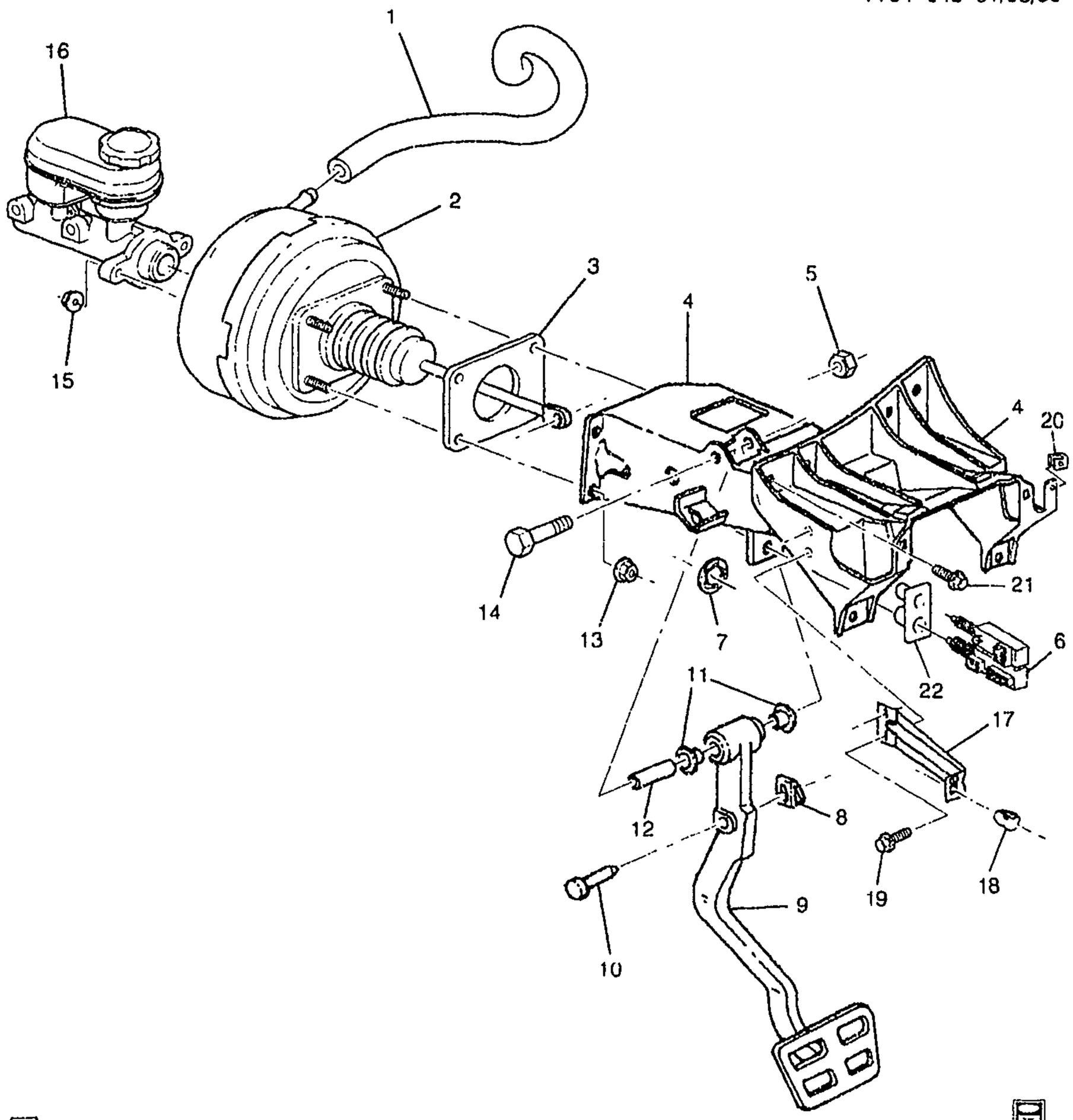

1Y04-043

1997-2002 Y BRAKE PEDAL & MASTER CYLINDER MOUNTING

1.	3-C14	4.931	HOSE, P/B BOOS VAC	97-02	Y	1	10255124
		N.S.	LUBRICANT, P/B BOOS VAC HOSE		.....		
2.	3-C14	4.901	BOOSTER, P/B (CPS) (SEE GROUP 4 FOR DETAILED ILLUSTRATION) (AC-DELCO #178-638)	97-00	Y	1	18026035

cardiagn.com

	3-C14	4.805	BOOSTER, P/B (CPS) (SEE GROUP 4 FOR DETAILED ILLUSTRATION) (4.901) (AC-DELCO #178-638)	97-00	Y	1	18026035
	3-C14	4.901	BOOSTER, P/B (CPS) (SEE GROUP 4 FOR DETAILED ILLUSTRATION) (AC-DELCO #178-662)	01-02	Y	1	18046267
	3-C14	4.805	BOOSTER, P/B (CPS) (SEE GROUP 4 FOR DETAILED ILLUSTRATION) (4.901) (AC-DELCO #178-662)	01-02	Y	1	18046267
3.	3-C14	4.805	GASKET, P/B BOOS (4.910)	97-02	Y	1	10160244
4.	3-N22	6.760	BRACKET, STRG COL (#52)	97-02	Y	1	10402879
5.		8.915	NUT, HFH, 10X1.5 6H THD, 21.3 OD, 9.8 THK 13 HEX DR, GRD 9, ZF (BRK PEDAL PIV) (8.917)	97-02	.....	1	10255857
6.	3-C10	4.710	SWITCH, ELEK BRK CONT BRK PED (W/ S/LP SW)	97-02	Y	1	11516210
	3-M25	2.447	SWITCH, ELEK BRK CONT BRK PED (W/ S/LP SW) (4.710)	97-02	Y	1	11516210
7.		N.S.	RETAINER, BRK PED BRKT (PUSH ON) (PART USED TO HOLD SWITCHES IN PLACE; ONLY USED IN PRODUCTION, NOT IN SERVICE.)		.....		
8.	3-C6	4.662	RETAINER, BRK PED PUSH ROD	97-02	Y	1	3817880
9.	3-C5	4.625	PEDAL, BRK	97-02	Y (M30)	1	10253660
	3-C5	4.625	PEDAL, BRK	97-00	Y (MM6)	1	10262012
	3-C5	4.625	PEDAL, BRK	01-02	Y (MM6, M12)	1	10262012
10.	3-C5	4.634	PIN, BRK PED PUSH ROD	97-02	Y	1	10401285
11.	3-C5	4.626	BUSHING, BRK PED PIV (0.831) .	97-02	Y	2	15594358
		8.808	LUBRICANT, HIGH TEMPERATURE, WATER SPRAY RESISTANT (1.75 OZ. TUBE (BRK PED) (8.800)	97-02	....	1	12345996
12.		N.S.	SPACER, BRK PED PIV		.....		
13.	3-C14	4.845	NUT, P/B BOOS (M10X1.5X11) (4.662)		.....	4	25664438
14.		8.900	BOLT, HFH M10X1.5X75 10.9PZOR (BRK PED PIV)	97-02	.....	1	11508540
15.	3-C6	4.662	NUT, BRK M/CYL (M10X1.5X11) ..		.....	2	25664438
16.	3-C6	4.650	CYLINDER, BRK MAS (CPS) (SEE GROUP 4 FOR DETAILED ILLUSTRATION) (AC-DELCO #174-743)	97	Y	1	18029860
	3-C6	4.650	CYLINDER, BRK MAS (CPS) (SEE GROUP 4 FOR DETAILED ILLUSTRATION) (AC-DELCO #174-747)	98-02	Y	1	18026278
	3-C5	4.649	CYLINDER KIT, BRK MAS (CPS) (SEE GROUP 4 FOR DETAILED ILLUSTRATION) (AC-DELCO #175-431)	97	Y	1	18029859
	3-C5	4.649	CYLINDER KIT, BRK MAS (CPS) (SEE GROUP 4 FOR DETAILED ILLUSTRATION) (4.650) (AC-DELCO #175-433)	98-02	Y	1	18026279

cardiagn.com

17.	3-N25	10.235	BRACKET, I/P DRVR KNEE BOLS OTR (INCLS 18)	97-02	Y	1	10289378
18.	3-N25	10.235	NUT, I/P DRVR KNEE BOLS OTR BRKT (PART OF 17) (4.2X1.41 TAPPING) (SPL) (3.430)	97-02	Y	1	25536302
19.		8.977	SCREW, HEX W/FL WA M4.2X2.25X20 TAP POR (I/P DRVR KNEE BOLS AT STRG COL BRKT)	97-02		2	11508443
20.		8.921	NUT, U TYPE, MULTI THD, PREV TORQ, M4.2X1.41TAP, 8.1REACH, 0.65-3.80 PNLS 1065 PZOR (STRG COL BRKT) (AC-DELCO #11513599)	97-02		1	11513599
21.		8.900	BOLT, HEX W/FLAT WA, M6X1X30, 17MMOD, 5MM DOG PT, 500M (9.8) 7111M (STRG COL BRKT)	97-02		6	11515905
22.	3-M25	2.447	RETAINER, S/LP & TCC & CRCONT REL SW (AC-DELCO #3537079)	97-02	Y	1	3537079

RPO DEFINITIONS
MM6 – TRANSMISSION MAN 6 SPD, BORG WARNER, 85MM, 1ST 2.66, 6TH 0.50, O/D
M12 – TRANSMISSION MAN 6 SPD, TREMEC, 85MM, 1ST 2.97, 6TH 0.57, O/D
M30 – TRANSMISSION,AUTOMATIC 4 SPEED,4L60E,ELECTRONIC

cardiagn.com

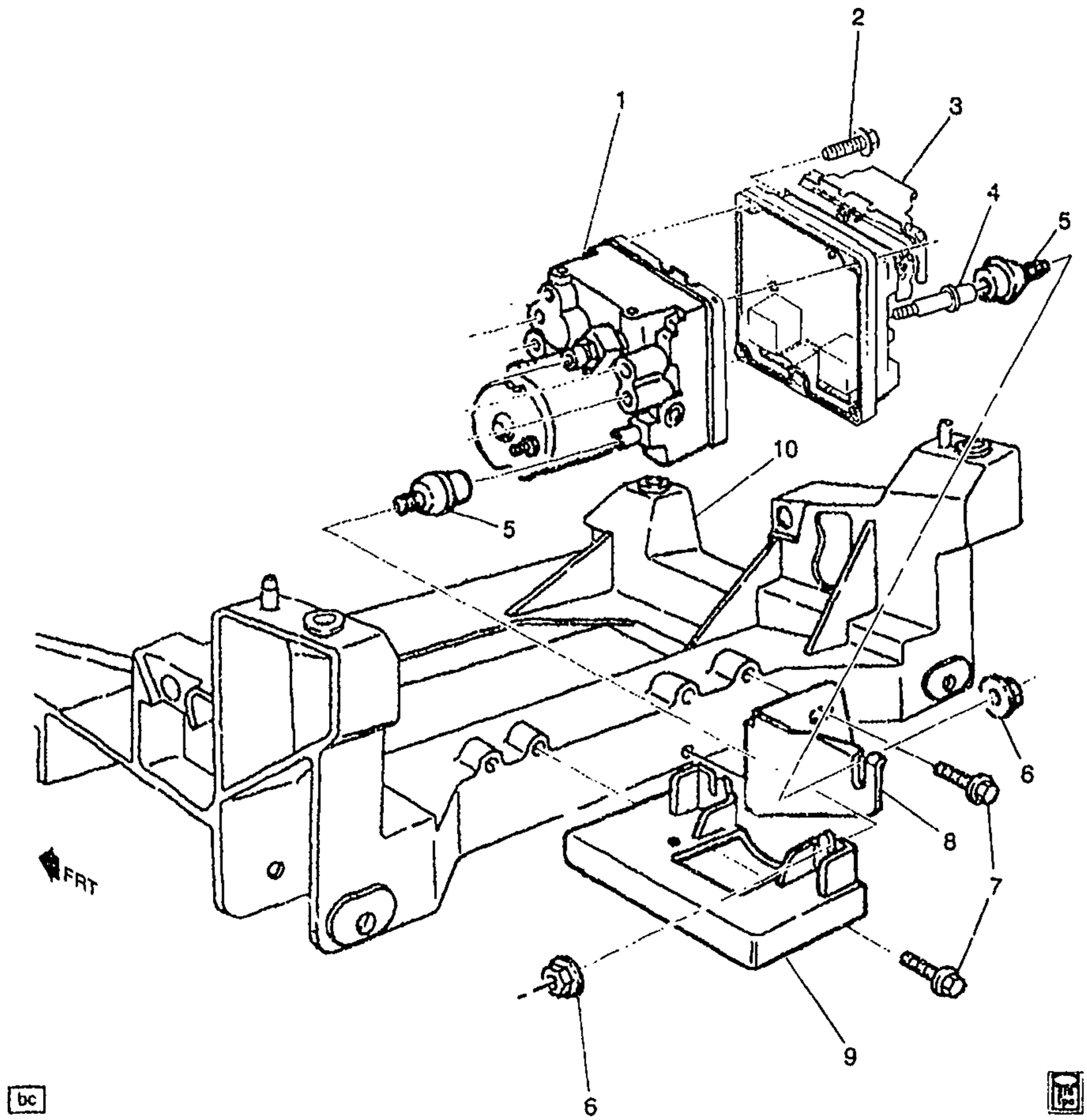

1Y04-058

1997 Y BRAKE CONTROL MODULATOR VALVE & MOUNTING
1998 Y BRAKE CONTROL MODULATOR VALVE & MOUNTING(EXC JAG)

1.	3-C13	4.730	VALVE, BRK PRESS MOD (AC-DELCO #12527809)	97	Y	1	12527809
	3-C13	4.730	VALVE, BRK PRESS MOD (AC-DELCO #10417038)	98	Y (JL4)	1	10417038
	3-C13	4.730	VALVE, BRK PRESS MOD (AC-DELCO #12527809)	98	Y (EXC JAG)	1	12527809
2.	3-C13	4.730	BOLT, BRK PRESS MOD VLV (M5, 28.2MM LENGTH) (TORX T25)	97-98	Y	4	25625388
3.	3-C11	4.720	MODULE, ELEK BRK CONT	97	Y	1	9355246

cardiagn.com

	3–C11	4.720	CONNECTOR KIT, ELEK BRK CONT MDL WRG HARN (INCLS 32–WAY F & 6–WAY F CONN, RET, CVR & CAV PLUGS/SEALS) .	97–98	Y	1	12167312
4.	3–C11	4.720	BOLT, ELEK BRK CONT MDL	97	Y	1	10276651
	3–C11	4.720	BOLT, ELEK BRK CONT MDL	98	Y (YGH)	1	10276651
5.	3–C13	4.730	INSULATOR, BRK PRESS MOD VLV	97–98	Y	3	10291812
6.		8.917	NUT, HFH M6X1X6.5 ZOR 9 (BRK PRESS MOD VLV BRKT) (RETAINS INSUL TO BRKT)	97–98		3	3530297
7.		8.900	BOLT, M10X1.5X 25 POINTED, 21MM THD, 21.5 OD (BRK PRESS MOD VLV BRKT)	97–98		6	11515765
8.	3–C13	4.730	BRACKET, BRK PRESS MOD VLV (POSN #2) (ABS/ASR RR PACKAGE)	97	Y	RH	10289123
	3–C13	4.730	BRACKET, BRK PRESS MOD VLV (POSN #2) (ABS/ASR RR PACKAGE)	98	Y (EXC JAG)	RH	10289123
9.	3–C13	4.730	BRACKET, BRK PRESS MOD VLV (POSN #1) (ABS/ASR RR PACKAGE)	97	Y	LH	10289122
	3–C13	4.730	BRACKET, BRK PRESS MOD VLV (POSN #1) (ABS/ASR RR PACKAGE)	98	Y (EXC JAG)	LH	10289122
10.	3–N22	7.014	CROSSMEMBER, RR (CAST ALUM)	97	Y	1	10266823
	3–N22	7.014	CROSSMEMBER, RR (CAST ALUM)	98	Y (EXC JAG)	1	10266823

RPO DEFINITIONS
JAG – BRAKE PROVISIONS ABS LOCATION
JL4 – CONTROL ACTIVE BRAKE
YGH – TIRE REAR P275/40ZR18 BW TL HW4 SBR EMT

cardiagn.com

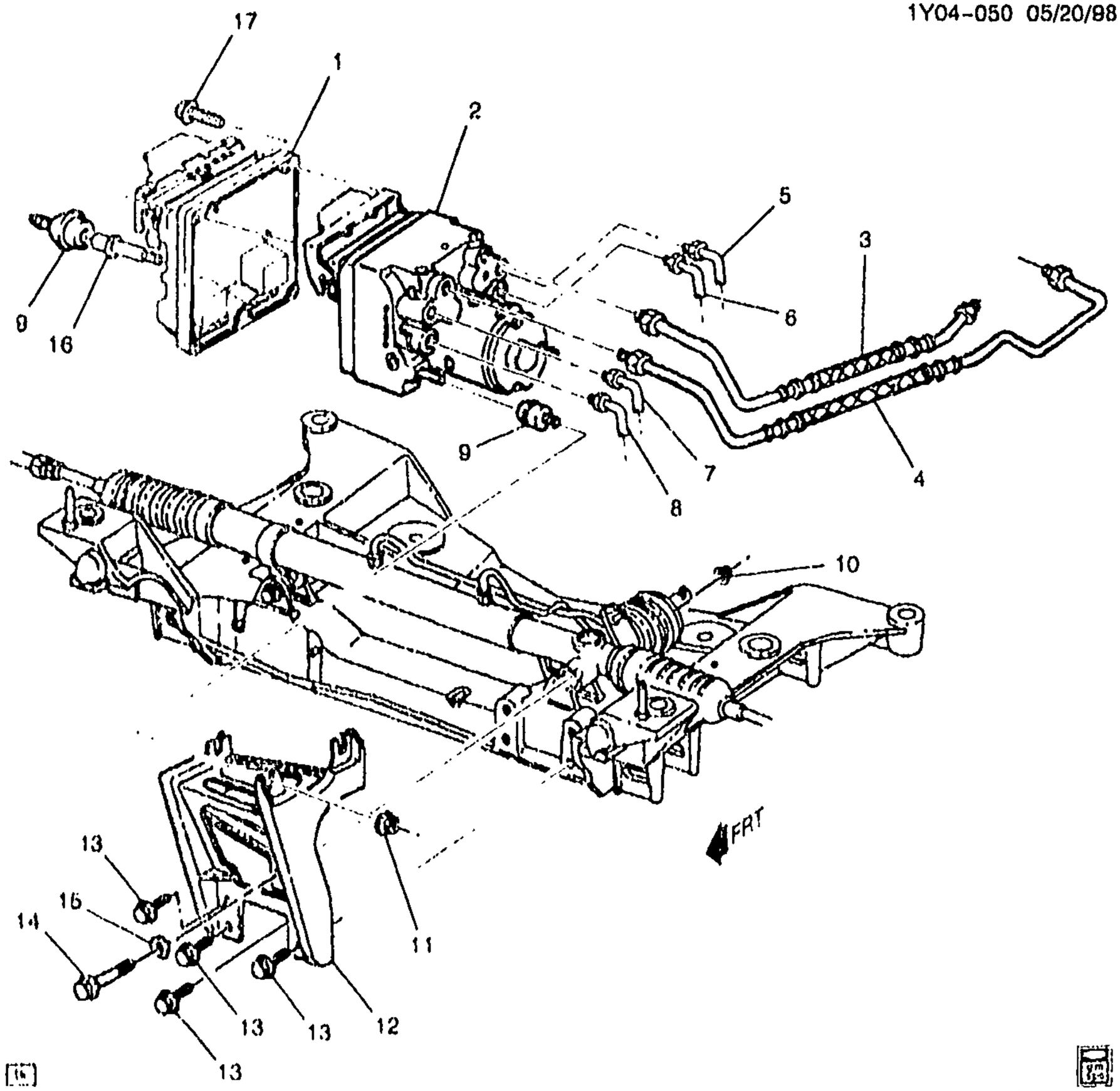

1Y04-050

1998 Y BRAKE CONTROL MODULATOR VALVE & MOUNTING(JAG)
1999-2000 Y BRAKE CONTROL MODULATOR VALVE & MOUNTING

1.	3-C11	4.720	MODULE, ELEK BRK CONT (AC-DELCO #9367071)	98	Y07-67 (EXC JL4)	1	9367071
	3-C11	4.720	MODULE, ELEK BRK CONT (AC-DELCO #9367071)	99-00	Y07-67 (JL9) (EXC JL4)	1	9367071
	3-C11	4.720	MODULE, ELEK BRK CONT (AC-DELCO #09376711)	99-00	Y (JL4, JL9)	1	9376711
	3-C11	4.720	MODULE, ELEK BRK CONT (AC-DELCO #9367071)	99	Y37 (JL9, NV7, Z19) (EXC JL4)	1	9367071
	3-C11	4.720	MODULE, ELEK BRK CONT (AC-DELCO #09378853)	99	Y37 (JL9) (EXC NV7) ..	1	9378853
	3-C11	4.720	MODULE, ELEK BRK & TRACT CONT (AC-DELCO #09376711) .	98	Y (JAG, JL4, JL9)	1	9376711

cardiagn.com

							1Y04-050
	3-C11	4.720	CONNECTOR, MDL-ELEK BRK CONT (BLUE) (8-WAY F) (W/LEADS) (2.535) (AC-DELCO #PT266)	98	Y	1	12101875
	3-C11	4.720	CONNECTOR, MDL-ELEK BRK CONT (BLACK) (8-WAY F W/LEADS, 7-12GA & 4-18GA AS REQ) (2.535) (AC-DELCO #PT1346)	98	Y	1	15306189
	3-C11	4.720	CONNECTOR, MDL-ELEK BRK CONT (INCLS 32-WAY F & 6-WAY F CONN, RET, CVR & CAV PLUGS/SEALS)	99-00	Y	1	12167312
2.	3-C13	4.730	VALVE, BRK PRESS MOD (AC-DELCO #10417038)	99-00	Y (JL4)	1	10417038
	3-C13	4.730	VALVE, BRK PRESS MOD (AC-DELCO #12530740)	98	Y (JAG) (EXC JL4)	1	12530740
	3-C13	4.730	VALVE, BRK PRESS MOD (AC-DELCO #12530740)	99-00	Y (JL9) (EXC JL4)	1	12530740
	3-C13	4.730	VALVE, BRK PRESS MOD (AC-DELCO #12530740)	00	Y07 (T86) (EXC JL4) ...	1	12530740
3.	3-C9	4.685	PIPE, BRK PRESS MOD VLV M/CYL RSVR RR	98	Y (JAG) (EXC JL4)	1	10413369
	3-C9	4.685	PIPE, BRK PRESS MOD VLV M/CYL RSVR RR	99-00	Y (EXC JL4)	1	10413369
4.	3-C9	4.685	PIPE, BRK PRESS MOD VLV M/CYL RSVR FRT	98	Y (JAG) (EXC JL4)	1	10413370
	3-C9	4.685	PIPE, BRK PRESS MOD VLV M/CYL RSVR FRT	99-00	Y (EXC JL4)	1	10413370
5.		8.965	TUBING, BULK (STEEL) 3/16X20 FT ROLL (PIPE, RR BRK) (LH) (8.964)	98-00	.....	1	12547207
		8.963	NUT , FLRD TUBE, M10X1X17.3, 4.75 TUBE, 7113M (FRT BRK PIPE)	98-00	.....	1	11516402
		8.963	NUT, M12X1X17.6, LCS, ZE, 4.75 TUBE OD, 35 DEG (FRT BRK PIPE) (8.924)	98-00	.....	1	11516404
	3-C9	4.686	FITTING, RR BRK PIPE (HEX 5.00 TUBE M10X1) (3.163)	98	Y (JAG)	1	14100427
	3-C9	4.686	FITTING, RR BRK PIPE (HEX 5.00 TUBE M10X1) (3.163)	99-00	Y	1	14100427
6.		8.965	TUBING, BULK (STEEL) 3/16X20 FT ROLL (PIPE, RR BRK) (RH) (8.964)	98-00	.....	1	12547207
		8.963	NUT , FLRD TUBE, M10X1X17.3, 4.75 TUBE, 7113M (FRT BRK PIPE)	98-00	.....	1	11516402
		8.963	NUT, M12X1X17.6, LCS, ZE, 4.75 TUBE OD, 35 DEG (FRT BRK PIPE) (8.924)	98-00	.....	1	11516404
	3-C9	4.686	FITTING, RR BRK PIPE (HEX 5.00 TUBE M10X1) (3.163)	98	Y (JAG)	1	14100427
	3-C9	4.686	FITTING, RR BRK PIPE (HEX 5.00 TUBE M10X1) (3.163)	99-00	Y	1	14100427
7.		8.965	TUBING, BULK (STEEL) 3/16X20 FT ROLL (RT FRT BRK) (8.964) ..	98-00	....	1	12547207

cardiagn.com

							1Y04-050
		8.963	NUT, FLRD TUBE, M10X1X17.3, 4.75 TUBE, 7113M (FRT BRK PIPE)	98-00		1	11516402
		8.963	NUT, M12X1X17.6, LCS, ZE, 4.75 TUBE OD, 35 DEG (FRT BRK PIPE) (8.924)	98-00		1	11516404
8.		8.965	TUBING, BULK (STEEL) 3/16X20 FT ROLL (LEFT FRT BRK) (8.964)	98-00		1	12547207
		8.963	NUT, FLRD TUBE, M10X1X17.3, 4.75 TUBE, 7113M (FRT BRK PIPE)	98-00		1	11516402
		8.963	NUT, M12X1X17.6, LCS, ZE, 4.75 TUBE OD, 35 DEG (FRT BRK PIPE) (8.924)	98-00		1	11516404
9.	3-C13	4.730	INSULATOR, BRK PRESS MOD VLV	98-00	Y	3	10291812
10.		8.917	NUT, HEX FLG PREVAILING TORQ (M12X1.75X14) (ZO 10) (BRK PRESS MOD VLV)	98-00	Y	1	11515744
11.		8.917	NUT, HEX W/CON WA 6X1X5.5 16-OD ZP 9 (BRK PRESS MOD VLV BRKT)	98-00	01	1	11517293
		8.927	WASHER, SEALING, 4 ID, 25 OD, M4 THK, RUB (BRK PRESS MOD VLV BRKT)	98-00	01	1	20733729
12.	3-C13	4.730	BRACKET, BRK PRESS MOD VLV	98	Y (JAG)	1	10284788
	3-C13	4.730	BRACKET, BRK PRESS MOD VLV	99-00	Y	1	10284788
13.		8.900	BOLT-HEX, M8X1.25X30, 22 THD, 24MM OD, 9.8, 7114M (BRK PRESS MOD VLV BRKT)	98-00	Y	4	11516594
14.	3-N22	6.509	BOLT, S/GR	98	Y (JAG)	1	10422130
	3-N22	6.509	BOLT, S/GR	99-00	Y	2	10422130
15.	3-N22	6.509	WASHER, S/GR	98	Y (JAG)	1	10406711
	3-N22	6.509	WASHER, S/GR	99-00	Y	1	10406711
16.	3-C11	4.720	BOLT, ELEK BRK CONT MDL	98	Y (YGH)	1	10276651
	3-C11	4.720	BOLT, ELEK BRK CONT MDL	99-00	Y	1	10276651
	3-C11	4.720	BOLT, ELEK BRK CONT MDL (M5, 28.2MM LENGTH) (TORX T25) (4.730)	99-00	Y	4	25625388
	3-C11	4.720	BOLT, ELEK BRK CONT MDL (M5, 28.2MM LENGTH) (TORX T25) (4.730)	00	Y07 (T86)	1	25625388
17.	3-C13	4.730	BOLT, BRK PRESS MOD VLV (M5, 28.2MM LENGTH) (TORX T25)	98-00	Y	4	25625388
	3-C13	4.730	BOLT, BRK PRESS MOD VLV (4.720)	00	Y37 (JL9) (EXC NV7)	1	10276651

RPO DEFINITIONS
JAG – BRAKE PROVISIONS ABS LOCATION
JL4 – CONTROL ACTIVE BRAKE
JL9 – BRAKE SYSTEM,POWER,FRONT AND REAR DISC,ANTILOCK
NV7 – STEERING,POWER,VARIABLE EFFORT
T86 – LAMP TAIL & STOP, EXPORT
YGH – TIRE REAR P275/40ZR18 BW TL HW4 SBR EMT
Z19 – PERFORMANCE PKG COUPE

cardiagn.com

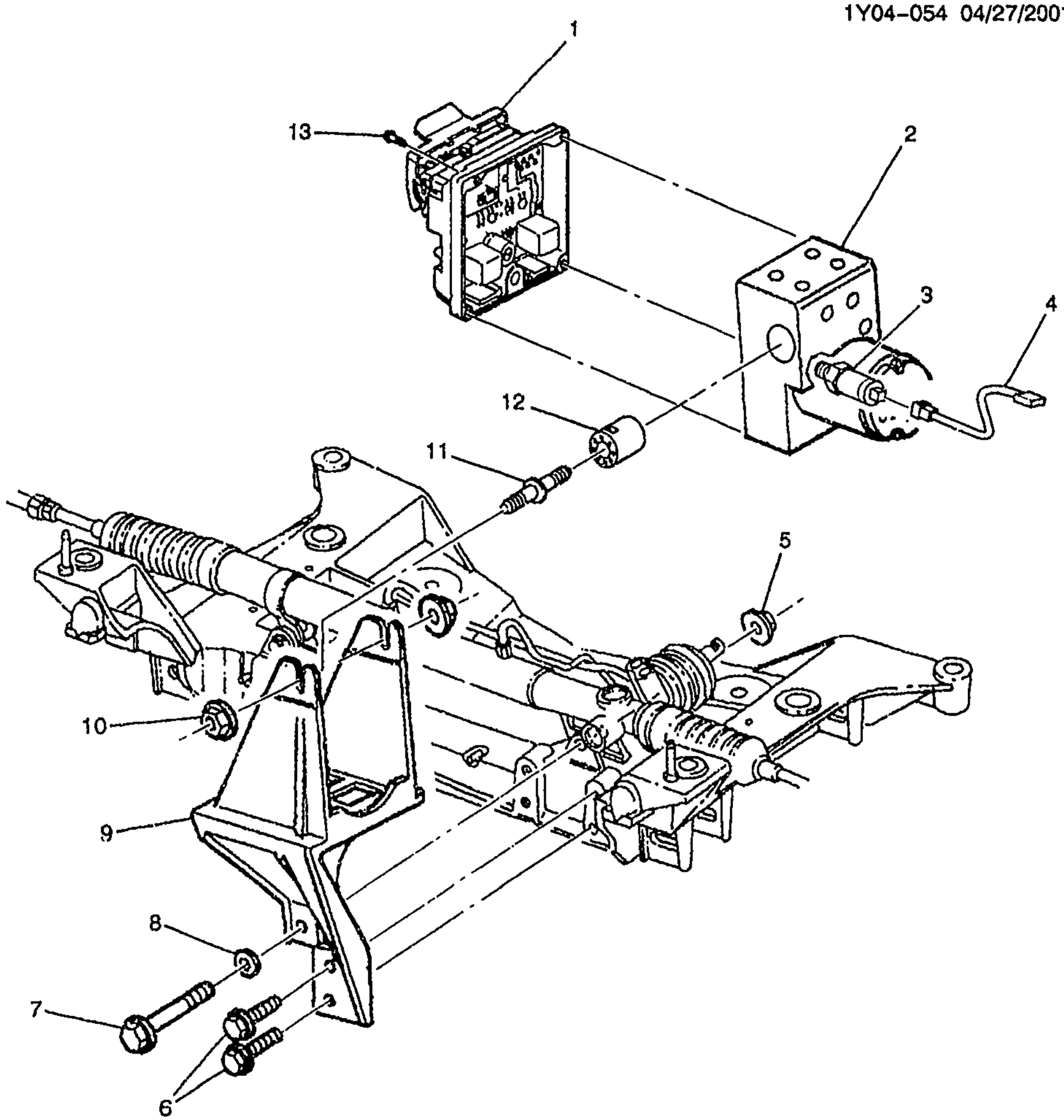

bc

2001-2002 Y BRAKE CONTROL MODULATOR VALVE

1.	3-C11	4.720	MODULE, ELEK BRK CONT	01	Y	1	12208997
	3-C11	4.720	MODULE, ELEK BRK CONT	02	Y	1	12216561
2.		N.S.	VALVE, BRK PRESS MOD		.....		
3.		N.S.	SENSOR, BRK PRESS MOD VLV PRESS		.....		
4.	3-C11	4.720	HARNESS, ELEK BRK CONT WRG HARN EXTN	01	YY07-67 (JL4)	1	10434076

cardiagn.com

							1Y04–054
	3–C11	4.720	HARNESS, ELEK BRK CONT WRG HARN EXTN	01	YY37	1	10434076
	3–C11	4.720	HARNESS, ELEK BRK CONT WRG HARN EXTN	02	Y	1	10434076
5.		8.917	NUT–METRIC ALL METAL DIR'L PRVG TORQ TENS (S/GR)	01–02	.....	1	11516078
6.		8.900	BOLT–HEX, M8X1.25X30, 22 THD, 24MM OD, 9.8, 7114M (BRK PRESS MOD VLV BRKT)	01–02	.....	2	11516594
7.	3–N22	6.509	BOLT, S/GR	01–02	Y	2	10422130
8.	3–N22	6.509	WASHER, S/GR	01–02	Y	1	10406711
9.	3–C13	4.730	BRACKET, BRK PRESS MOD VLV	01–02	Y	1	10438000
10.		8.917	NUT, HFH, M8X1.25, 17.9 OD, 738 THK, 13MM HEX, 10, ZF (BRK PRESS MOD VLV BRKT) (8.915) (AC–DELCO #11514596)	01–02	.....	AR	11514596
11.	3–C13	4.730	BOLT, BRK PRESS MOD VLV	01–02	Y	2	10422885
12.	3–C13	4.730	INSULATOR, BRK PRESS MOD VLV	01–02	Y	2	10422887
13.		8.913	BOLT–SCRW, M4X0.7 PAN HD, LENGTH 21.9, ELEK BRK CONT MDL (ELEK BRK CONT MDL HSG)	01–02	.....	6	11517300

RPO DEFINITIONS
JL4 – CONTROL ACTIVE BRAKE

cardiagn.com

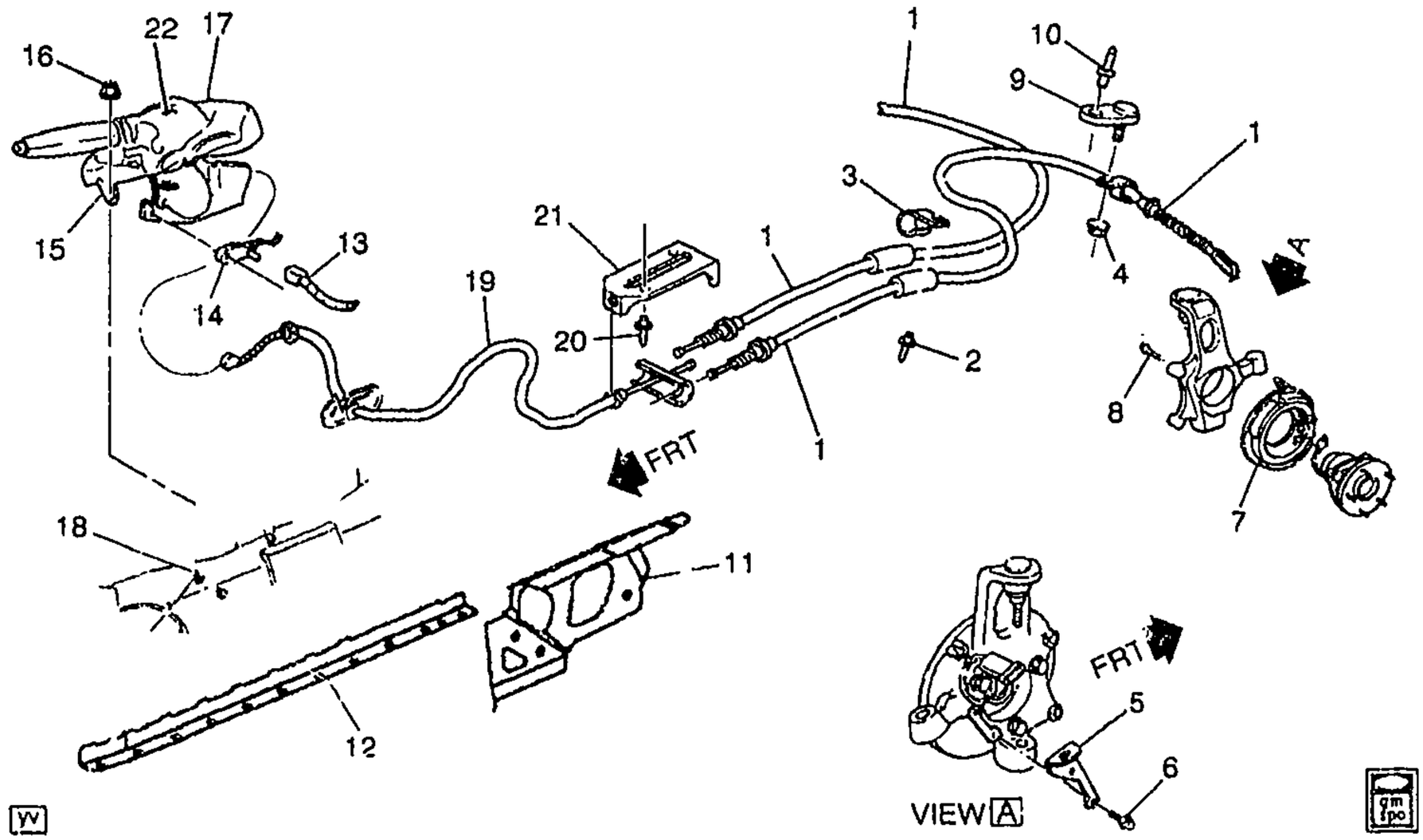

1Y04-044

1997-2002 Y PARKING BRAKE SYSTEM

1.	3-C14	4.779	CABLE, PARK BRK RR	97-02	Y	RH	10299165
	3-C14	4.779	CABLE, PARK BRK RR	97-02	Y	LH	10409250
	3-C14	4.779	CABLE, PARK BRK RR (AC-DELCO #18P1817)	98	Y	LH	18039887
	3-C14	4.779	CABLE, PARK BRK RR (AC-DELCO #18P1818)	98	Y	RH	18039888
2.		N.S.	RIVET, PARK BRK RR CBL CLIP (NCSI)				
3.	3-C14	4.785	CLIP, PARK BRK RR CBL	97-02	Y	2	10281421
4.		8.917	NUT, HFH M6X1X6.5 ZOR 9 (PARK BRK RR CBL)	97-02		2	3530297
5.	3-C14	4.785	BRACKET, PARK BRK CBL	97-02	Y	LH	10262949
	3-C14	4.785	BRACKET, PARK BRK CBL	97-02	Y	RH	10262950
6.		8.900	BOLT, HFH, M10X1.5X70, 30 THD, 22.3 OD, 9.8 MAT, 7114M FIN, MACH, REDUCED BODY (PARK BRK ASM MTG)	97-02		4	11516356
7.		N.S.	BRAKE, RR (N-CPS)				
	3-D8	5.149	BRAKE KIT, RR PARK	97-98	Y	2	12530691
	3-D8	5.149	BRAKE KIT, RR PARK	99-02	Y	2	12455801
	3-D8	5.158	PLATE, RR PARK BRK STOP	97-98	Y	LH	12530692
	3-D8	5.158	PLATE, RR PARK BRK STOP	97-98	Y	RH	12530693
	3-D8	5.158	PLATE, RR PARK BRK STOP	99-02	Y	LH	12455802
	3-D8	5.158	PLATE, RR PARK BRK STOP	99-02	Y	RH	12455803
	3-C5	4.591	PROTECTOR, PARK BRK LVR BOOT	97-02	Y	LH	12530694
	3-C5	4.591	PROTECTOR, PARK BRK LVR BOOT	97-02	Y	RH	12530695

cardiagn.com

							1Y04-044
	3-D8	5.017	SHOE KIT, RR PARK BRK (AC-DELCO #171-783)	97-98	Y	2	12530696
	3-D8	5.017	SHOE KIT, RR PARK BRK (AC-DELCO #171-806)	99-02	Y	2	12455804
8.	3-D18	5.816	BOLT, RR WHL HUB (5.812)	97-02	Y	6	10414261
9.	3-C14	4.785	PLATE, PARK BRK RR CBL CLIP STUD	97-02	Y	2	10404603
10.		N.S.	RIVET, PARK BRK RR CBL CLIP STUD PLT (NCSI)				
11.		N.S.	BRACKET, PARK BRK LVR (N-POSA)				
12.	3-N26	12.980	BRACKET, FLR PNL TUN REINF	97-01	Y	LH	10250149
	3-N26	12.980	BRACKET, FLR PNL TUN REINF	97-01	Y	RH	10250150
	3-N26	12.980	BRACKET, FLR PNL TUN REINF (#32)	02	Y	LH	10449844
	3-N26	12.980	BRACKET, FLR PNL TUN REINF (#32)	02	Y	RH	10449845
13.		8.965	CONNECTOR, W/LEADS (1 PIN F) (SWITCH PARK BRK) (2.535) (AC-DELCO #PT230)	97-02		1	12102561
14.		N.S.	SWITCH, PARK BRK IND (PART OF 17)				
15.		N.S.	PIN-NOT SERVICED (PART OF LEVER ASM, PRK BRK)				
16.		8.917	NUT, HEX W/CON WA 6X1X5.5 16-OD ZP 9 (PARK BRK LVR BOOT RET PLT)	97-02		2	11517293
17.	3-C5	4.591	LEVER, PARK BRK (INCLS 14, 22)	97	Y	1	10438439
	3-C5	4.591	LEVER, PARK BRK (INCLS 14, 22)	98	Y (EXC Z4Z)	1	10438439
	3-C5	4.591	LEVER, PARK BRK (INCLS 14, 22)	98	Y67 (Z4Z)	1	10298245
	3-C5	4.591	LEVER, PARK BRK (INCLS 14, 22)	99-02	Y	1	10438439
18.		8.913	SCREW, PAN HD C/R M8X1.25X20 9.8 POR (PARK BRK LVR)	97-02		3	14081021
19.		N.S.	CABLE-NOT SERVICED (PART OF LEVER ASM)			1	
20.		N.S.	RIVET, PARK BRK CBL EQLZR BRKT (NCSI)				
21.	3-C14	4.785	BRACKET, PARK BRK CBL EQLZR	97-02	Y	1	10255639
22.	3-C5	4.612	BOOT, PARK BRK LVR (PART OF 17)	97	Y	1	10278423
	3-C5	4.612	BOOT, PARK BRK LVR (PART OF 17)	98	Y (EXC Z4Z)	1	10278423
	3-C5	4.612	BOOT, PARK BRK LVR (PART OF 17)	98	Y67 (Z4Z)	1	10298246
	3-C5	4.612	BOOT, PARK BRK LVR (PART OF 17)	99	Y	1	10298088
	3-C5	4.612	BOOT, PARK BRK LVR (PART OF 17)	00-02	Y	1	10278423

RPO DEFINITIONS
Z4Z – MERCHANDISED PKG INDY PACE CAR

cardiagn.com

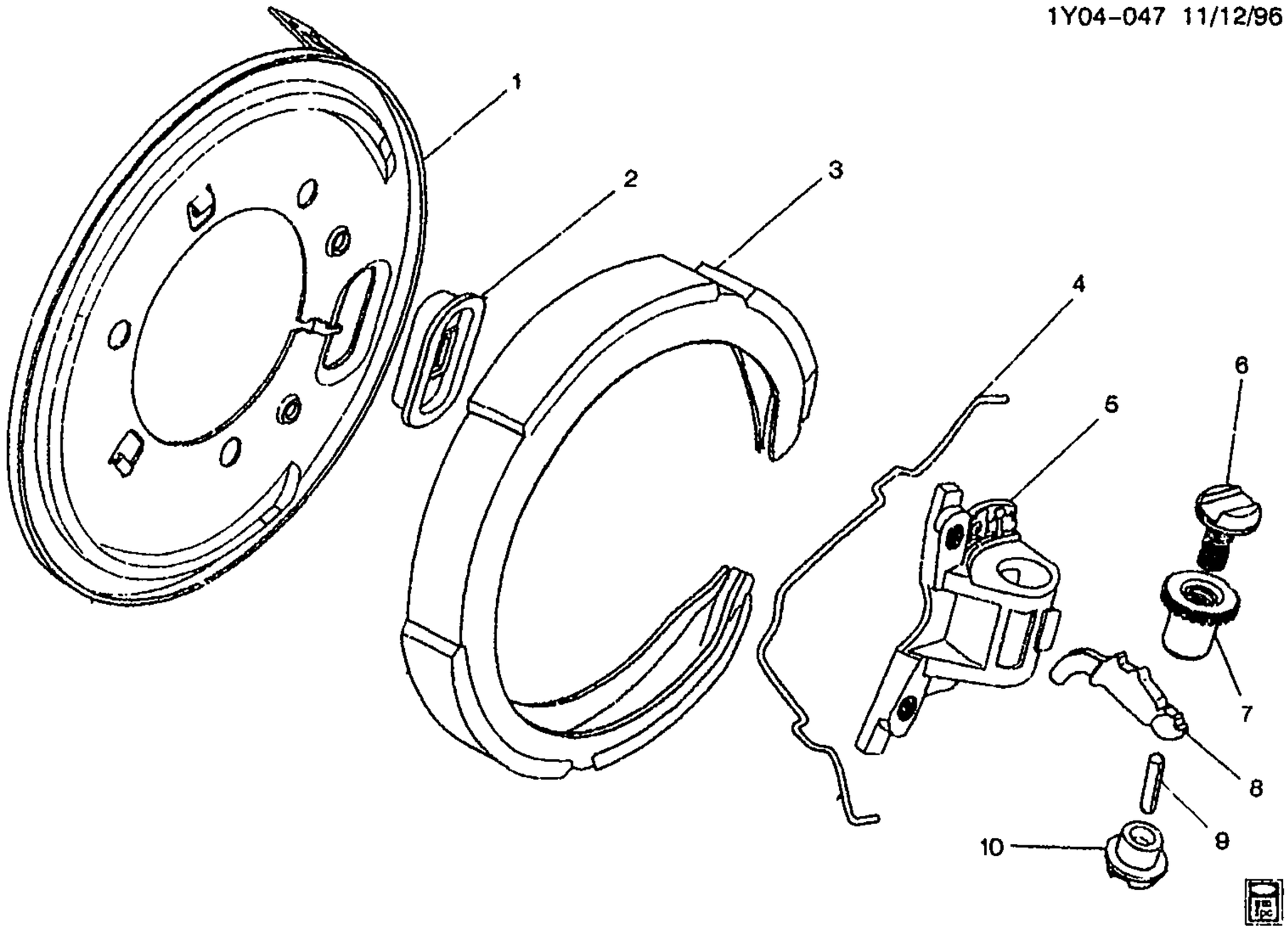

1Y04-047

1997-2002 Y PARKING BRAKE ASM

1.	3-C5	4.591	PROTECTOR, PARK BRK LVR BOOT	97-02	Y	LH	12530694
	3-C5	4.591	PROTECTOR, PARK BRK LVR BOOT	97-02	Y	RH	12530695
2.		N.S.	COVER, RR PARK BRK ADJ OPG (*KIT1)				
3.		N.S.	LINING, PARK BRK SHOE (*KIT1, KIT2)				
4.		N.S.	SPRING, RR PARK BRK SHOE HOLDN (*KIT1, KIT2)				
5.	3-D8	5.158	PLATE, RR PARK BRK STOP	97-98	Y	LH	12530692
	3-D8	5.158	PLATE, RR PARK BRK STOP	97-98	Y	RH	12530693
	3-D8	5.158	PLATE, RR PARK BRK STOP	99-02	Y	LH	12455802
	3-D8	5.158	PLATE, RR PARK BRK STOP	99-02	Y	RH	12455803
6.		N.S.	BOLT, PARK BRK SHOE ADJR (*KIT1)				
7.		N.S.	NUT, RR PARK BRK ADJ (*KIT1)				
8.		N.S.	LEVER, RR PARK BRK (*KIT1)				
9.		N.S.	ROD, RR PARK BRK ACTR LVR PUSH (*KIT1)				
10.		N.S.	ACTUATOR, PARK BRK (*KIT1)				

cardiagn.com

SERVICE KITS

1.	3–D8	5.149	BRAKE KIT, RR PARK (INCLS 2–4, 6–10)	97–98	Y	2	12530691
	3–D8	5.149	BRAKE KIT, RR PARK (INCLS 2–4, 6–10)	99–02	Y	2	12455801
2.	3–D8	5.017	SHOE KIT, RR PARK BRK (INCLS 3, 4) (AC–DELCO #171–783) ...	97–98	Y	2	12530696
	3–D8	5.017	SHOE KIT, RR PARK BRK (INCLS 3, 4) (AC–DELCO #171–806) ...	99–02	Y	2	12455804

cardiagn.com

ILLUSTRATION INDEX

	TITLE	GRID
1997–2002	Y DIFFERENTIAL CARRIER PART 1 (REAR)	3–J4
1997–2002	Y DIFFERENTIAL CARRIER PART 2 (SIDES)	3–J7
1997–1999	Y PROP SHAFT & SUPPORT DRIVE SHAFT (M30 AUTO TRANS)	3–J10
1997–1999	Y PROP SHAFT & SUPPORT DRIVE SHAFT (MM6 MAN TRANS)	3–J13
2000	Y PROP SHAFT & SUPPORT DRIVE SHAFT (MM6 MAN TRANS)	3–J16
2001–2002	Y PROP SHAFT & SUPPORT DRIVE SHAFT (MM6,M12 MAN TRANS)	3–J18
2000–2002	Y PROP SHAFT & SUPPORT DRIVE SHAFT (M30 AUTO TRANS)	3–J21
2001–2002	Y37 ROAD WHEEL INFLATOR KIT	3–J24
1997	Y WHEELS & WHEEL COVERS	3–J26
1998	Y WHEELS & WHEEL COVERS	3–K2
1999	Y WHEELS & WHEEL COVERS	3–K5
2000	Y WHEELS & WHEEL COVERS	3–K8
2001	Y WHEELS & WHEEL COVERS	3–K11
2002	Y WHEELS & WHEEL COVERS	3–K14

cardiagn.com

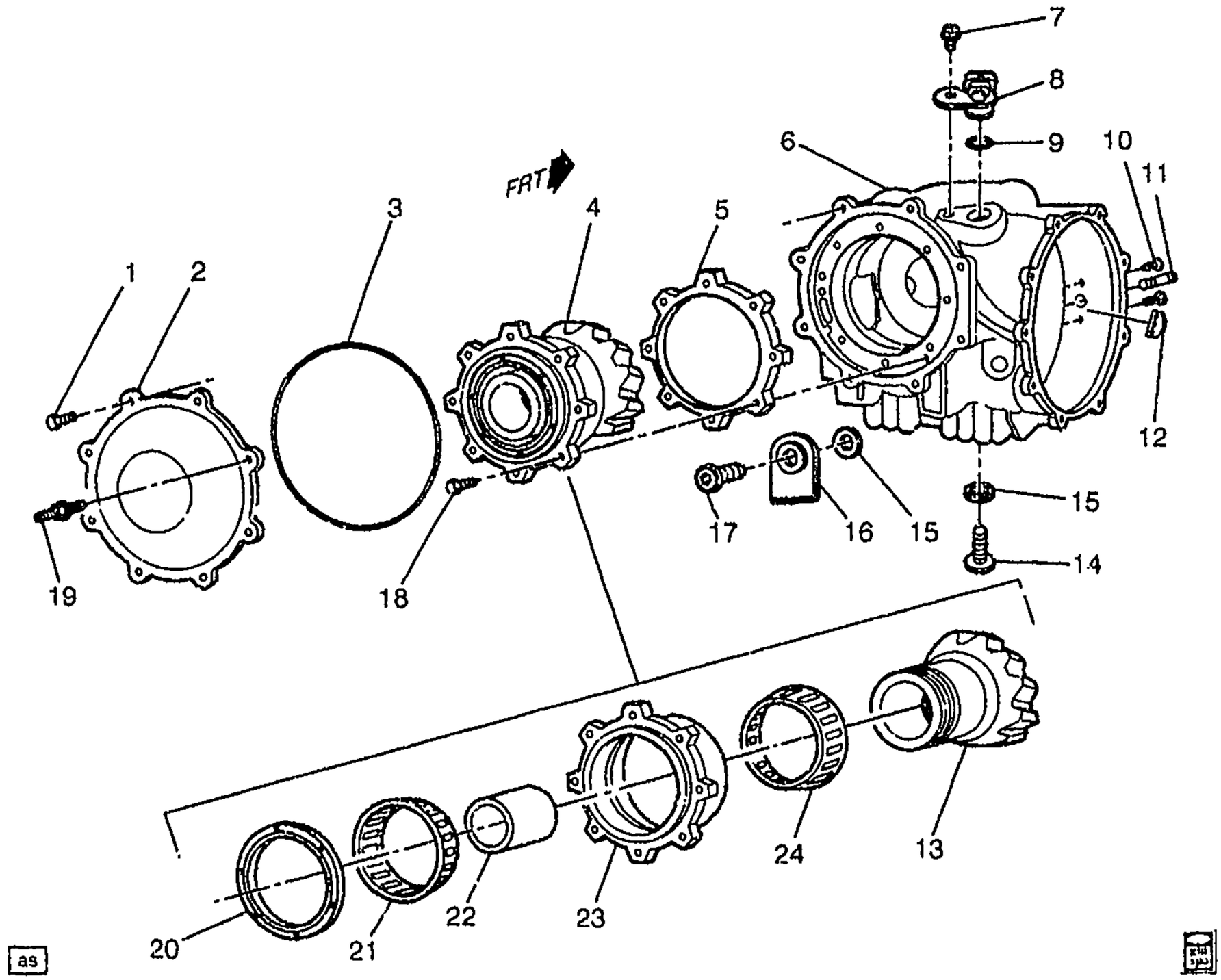

1Y05-012

1997-2002 Y DIFFERENTIAL CARRIER PART 1 (REAR)

1.	3-D9	5.398	BOLT, R/AXL HSG CVR (4.329) (AC-DELCO #12369459)	97-02	Y	7	12369459
2.	3-D9	5.398	COVER, R/AXL HSG	97-02	Y	1	12458079
3.	3-D9	5.399	GASKET, R/AXL HSG CVR (O-RING)	97-02	Y	1	12458151
4.	3-D12	5.511	DISC KIT, L/SLIP DIFF CLU	97-02	Y	2	12458083
5.	3-D12	5.537	SHIM, DIFF BRG (87X96.8X2.2) ..	97-02	Y	AR	12458086
	3-D12	5.537	SHIM, DIFF BRG (87X96.8X2.1) ..	97-02	Y	AR	12458087
	3-D12	5.537	SHIM, DIFF BRG (87X96.8X2) ...	97-02	Y	AR	12458088
	3-D12	5.537	SHIM, DIFF BRG (87X96.8X1.9) ..	97-02	Y	AR	12458089
	3-D12	5.537	SHIM, DIFF BRG (87X96.8X1.8) ..	97-02	Y	AR	12458090
	3-D12	5.537	SHIM, DIFF BRG (87X96.8X1.7) ..	97-02	Y	AR	12458091
	3-D12	5.537	SHIM, DIFF BRG (87X96.8X1.6) ..	97-02	Y	AR	12458092
	3-D12	5.537	SHIM, DIFF BRG (87X96.8X1.5) ..	97-02	Y	AR	12458093
	3-D12	5.537	SHIM, DIFF BRG (87X96.8X1.4) ..	97-02	Y	AR	12458094
	3-D12	5.537	SHIM, DIFF BRG (87X96.8X1.3) ..	97-02	Y	AR	12458095
	3-D12	5.537	SHIM, DIFF BRG (87X96.8X1.25) .	97-02	Y	AR	12458096
	3-D12	5.537	SHIM, DIFF BRG (87X96.8X1) ...	97-02	Y	AR	12458097
6.	3-D11	5.505	CARRIER, DIFF (3.15 RATIO)	97-02	Y (LS1, M30, G90)	1	12556313

© 2001 GENERAL MOTORS SERVICE PARTS OPERATIONS-CHEVROLET-15Y

cardiagn.com

						1Y05-012	
	3-D11	5.505	CARRIER, DIFF (2.73 RATIO) (W/GEARS) (5.546)	97-02	Y (M30, GU2)	1	12554837
	3-D11	5.505	CARRIER, DIFF	01	YY37 (M12, GU6)	1	12561853
	3-D11	5.505	CARRIER, DIFF	02	YY37 (LS6, M12, GU6)	1	12572683
	3-D11	5.505	CARRIER, DIFF (W/GEARS) (3.42 RATIO)	97-02	Y (MM6)	1	12551769
	3-D10	5.422	LOCK, R/AXL SHF	97-02	Y	1	12458084
	3-D9	5.387	VENT, R/AXL	97-02	Y	1	12458129
	3-D9	5.387	CLIP, R/AXL VENT HOSE	97-02	Y (M30)	1	12458149
	3-D9	5.387	BOLT, R/AXL VENT HOSE CLIP	97-02	Y	9	12458150
	3-D12	5.508	MAGNET, R/AXL HSG CHIP COLLECTOR (AC-DELCO #12458080)	97-02	Y	1	12458080
	3-N22	4.399	SEAL, MAIN SHF SEAL RET (O RING) (5.508)	97-02	Y (MM6)	1	12369456
	3-A17	4.176	SEAL, OUTPUT SHF SEAL RET (O RING) (5.508)	97-02	Y (M30)	1	12369456
	3-A17	4.176	SEAL, OUTPUT SHF SEAL RET (O RING) (5.508)	02	YY (M12)	1	12369456
7.	3-A28	4.329	BOLT, VEH SPD SEN (AC-DELCO #12369459)	97-01	Y	1	12369459
	3-A28	4.329	BOLT, VEH SPD SEN (AC-DELCO #12369459)	02	Y (LS1, M30, MM6, GU2, GU6, G90)	1	12369459
	3-A28	4.329	BOLT, VEH SPD SEN (AC-DELCO #12369459)	02	YY (LS6, M12, GU6)	1	12369459
	3-A28	4.329	BOLT, VEH SPD SEN (AC-DELCO #12369459)	02	YY37 (LS6, M12, GU6)	7	12369459
8.	3-A28	4.329	SENSOR, VEH SPD (AC-DELCO #213-344)	97-01	Y	1	12369458
	3-A28	4.329	SENSOR, VEH SPD (AC-DELCO #213-344)	02	Y (LS1, M30, MM6, GU2, GU6, G90)	1	12369458
	3-A28	4.329	SENSOR, VEH SPD (AC-DELCO #213-344)	02	YY37 (LS6, M12, GU6)	1	12369458
9.		N.S.	SEAL, SPEED SENSOR (O-RING/RET) (PART OF SENSOR)				
10.	3-N21 3-A9	4.083	BOLT, TRANS ADAP (M6X13)	97-02	Y (MM6)	2	12458099
	3-N21	4.083	BOLT, TRANS ADAP (M10X1.5-40MM) (0.683)	97-02	Y (MM6)	11	12523236
	3-N21 3-A9	4.083	BOLT, TRANS ADAP (M6X13)	01-02	YY (M12)	2	12458099
	3-N21	4.083	BOLT, TRANS ADAP (M10X1.5-40MM) (0.683)	01-02	YY37 (M12)	11	12523235
	3-N21 3-A9	4.083	BOLT, TRANS ADAP (FOA CARRIER) (M6X13)	97-02	Y (M30)	2	12458099
11.	3-N21 3-A9	4.085	STUD, TRANS (M10X8)	97-02	Y (MM6)	1	12458100
	3-N21 3-A9	4.085	STUD, TRANS (M10X8)	97-02	Y (M30)	1	12458100
	3-N21	4.085	STUD, TRANS (10X33)	97-02	Y (MM6)	1	88984492
	3-N21	4.085	STUD, TRANS (10X33)	97-02	Y (M30)	1	88984492
	3-N21 3-A9	4.085	STUD, TRANS (M10X8)	01-02	YY (M12)	1	12458100
	3-N21	4.085	STUD, TRANS (10X33)	01-02	YY (M12)	1	88984492
12.	3-N21 3-A9	4.083	ADAPTER, TRANS	97-02	Y (MM6)	1	12458088

cardiagn.com

							1Y05-012
	3-N21 3-A9	4.083	ADAPTER, TRANS	97-02	Y (M30)	1	12458098
	3-N21 3-A9	4.083	ADAPTER, TRANS	01-02	YY (M12)	1	12458098
13.		N.S.	DIFFERENTIAL PINION, SIDE GEAR				
14.	3-D9	5.400	PLUG, R/AXL HSG FILL (& DRAIN)	97-02	Y	2	12369461
15.	3-D9	5.400	GASKET, R/AXL HSG FIL PLUG (QTY (1) TO FIL PLG, QTY (1) TO DRN PLG)	97-02	Y	2	12369215
16.	3-D9	5.386	TAG, R/AXL IDENT	97-02	Y	1	12369462
17.	3-D9	5.400	PLUG, R/AXL HSG FILL	97-02	Y	2	12369461
18.	3-D11	5.476	BOLT, DIFF DRV P/GR BRG RET (5.387)	97-02	Y	8	12458150
19.	3-D9	5.398	STUD, R/AXL HSG CVR	97-02	Y	1	12458078
20.	3-D12	5.533	NUT, DIFF DRV P/GR BRG RET	97-02	Y	1	12458142
21.	3-D11	5.484	BEARING, DIFF DRV P/GR INR (AC-DELCO #FW111)	97-02	Y	1	12458130
22.	3-D10	5.453	SPACER, DIFF DRV P/GR BRG (15.782 LONG)	97-02	Y	AR	12458131
	3-D10	5.453	SPACER, DIFF DRV P/GR BRG (15.809 LONG)	97-02	Y	AR	12458132
	3-D10	5.453	SPACER, DIFF DRV P/GR BRG (15.836 LONG)	97-02	Y	AR	12458133
	3-D10	5.453	SPACER, DIFF DRV P/GR BRG (15.863 LONG)	97-02	Y	AR	12458134
	3-D10	5.453	SPACER, DIFF DRV P/GR BRG (15.890 LONG)	97-02	Y	AR	12458135
	3-D10	5.453	SPACER, DIFF DRV P/GR BRG (15.917 LONG)	97-02	Y	AR	12458136
	3-D10	5.453	SPACER, DIFF DRV P/GR BRG (15.944 LONG)	97-02	Y	AR	12458137
	3-D10	5.453	SPACER, DIFF DRV P/GR BRG (15.971 LONG)	97-02	Y	AR	12458138
	3-D10	5.453	SPACER, DIFF DRV P/GR BRG (15.998 LONG)	97-02	Y	AR	12458139
	3-D10	5.453	SPACER, DIFF DRV P/GR BRG (16.025 LONG)	97-02	Y	AR	12458140
23.	3-D9	5.387	HOUSING, R/AXL (PINION DRV)	97-02	Y (MM6)	1	12458101
	3-D9	5.387	HOUSING, R/AXL (PINION DRV)	97-02	Y (M30, G90)	1	12458101
	3-D9	5.387	HOUSING, R/AXL (PINION DRV)	97-02	Y (M30, GU2)	1	12458128
	3-D9	5.387	HOUSING, R/AXL (PINION DRV)	01-02	Y37 (M12)	1	12458101
24.	3-D10	5.447	BEARING, DIFF DRV P/GR OTR (AC-DELCO #FW112)	97-02	Y	1	12458141

RPO DEFINITIONS
GU2 - AXLE,REAR,2.73 RATIO
GU6 - AXLE,REAR,3.42 RATIO
G90 - AXLE REAR 3.15 RATIO
LS1 - ENGINE GAS, 8 CYL, 5.7L, SFI, ALUMINUM ENGINE
LS6 - ENGINE GAS, 8 CYL, 5.7L, SFI, ALUMINUM, HIGH OUTPUT
MM6 - TRANSMISSION MAN 6 SPD, BORG WARNER, 85MM, 1ST 2.66, 6TH 0.50, O/D
M12 - TRANSMISSION MAN 6 SPD, TREMEC, 85MM, 1ST 2.97, 6TH 0.57, O/D
M30 - TRANSMISSION,AUTOMATIC 4 SPEED,4L60E,ELECTRONIC

cardiagn.com

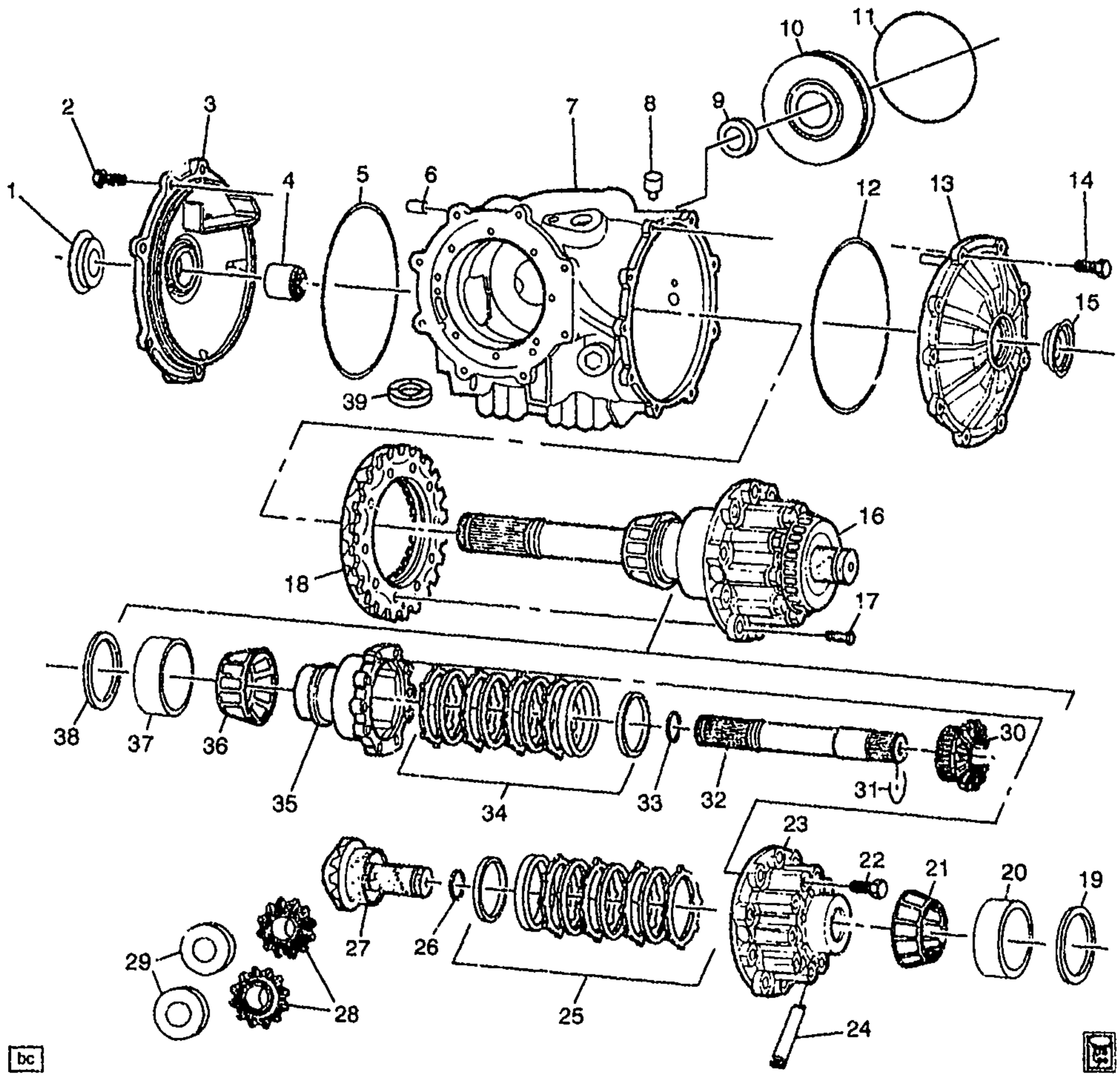

1Y05-022

1997-2002 Y DIFFERENTIAL CARRIER PART 2 (SIDES)

1.	3-D10	5.422	SEAL, OUTPUT SHF OIL (PART OF 3) (5.430)	97-02			12369460
2.	3-D9	5.398	BOLT, DIFF CARR CVR (5.387)	97-02	Y	6	12458150
3.	3-D12	5.510	COVER, DIFF CARR (INCLS 1, 4, 5)	97-02	Y	LH	12458145
4.	3-D10	5.422	BEARING, R/AXL SHF (OTR) (PART OF 3)	97-02	Y	LH	12458146
5	3-D12	5.508	SEAL, DIFF CARR CVR (O-RING) (PART OF 3)	97-02	Y	2	12457739
6.		N.S.	PIN, R/AXL HSG CVR LOC				
7.	3-D9	5.387	HOUSING, R/AXL	97-02	Y (MM6)	1	12458101

© 2001 GENERAL MOTORS SERVICE PARTS OPERATIONS - CHEVROLET - 15Y

cardiagn.com

							1Y05-022
	3-D9	5.387	HOUSING, R/AXL	97-02	Y (M30, G90)	1	12458101
	3-D9	5.387	HOUSING, R/AXL	97-02	Y (M30, GU2)	1	12458128
	3-D9	5.387	HOUSING, R/AXL	01-02	Y37 (M12)	1	12458101
8.	3-D9	5.387	VENT, R/AXL	97-02	Y	1	12458129
9.	3-N22	4.412	SEAL, RR OUTPUT SHF (4.176) (AC-DELCO #24207010)	97-02	Y (MM6)	1	24207010
10.	3-D12	5.508	RETAINER, DIFF CARR SEAL (PLATE)	97-02	Y (M30)	1	12369457
11.	3-N22	4.399	SEAL, MAIN SHF SEAL RET (O RING) (5.508)	97-02	Y (MM6)	1	12369456
12.	3-D12	5.508	SEAL, DIFF CARR CVR (O-RING) (PART OF 13)	97-02	Y	2	12457739
13.	3-D12	5.510	COVER, DIFF CARR (INCLS 12, 15)	97-02	Y	RH	12458148
14.	3-D9	5.387	BOLT, R/AXL VENT HOSE CLIP	97-02	Y	9	12458150
15.	3-D10	5.422	SEAL, OUTPUT SHF OIL (PART OF 13) (5.430)	97-02			12369460
16.	3-D12	5.510	DIFFERENTIAL, (2.73 RATIO) (INCLS 17, 22-28, 30-32, 34, 35)	97-02	Y (M30, GU2)	1	88984490
	3-D12	5.510	DIFFERENTIAL, (3.42 RATIO) (INCLS 17, 22-28, 30-32, 34, 35)	97-02	Y (MM6, GU6)	1	88984487
	3-D12	5.510	DIFFERENTIAL, (3.42 RATIO) (INCLS 17, 22-28, 30-32, 34, 35)	97-02	Y (LS1, M30, G90)	1	88984491
	3-D12	5.510	DIFFERENTIAL, (3.42 RATIO) (INCLS 17, 22-28, 30-32, 34, 35)	01	YY37 (LS6, M12, GU6)	1	88984488
	3-D12	5.510	DIFFERENTIAL, (3.42 RATIO) (INCLS 17, 22-28, 30-32, 34, 35)	02	YY37 (LS6, M12, GU6)	1	88984489
17.	3-D12	5.531	BOLT, DIFF R/GR (PART OF 16)	97-02	Y	10	12458082
18.		N.S.	GEAR, DIFF RING				
19.	3-D12	5.537	SHIM, DIFF BRG (87X96.8X2.2)	97-02	Y	AR	12458086
	3-D12	5.537	SHIM, DIFF BRG (87X96.8X2.1)	97-02	Y	AR	12458087
	3-D12	5.537	SHIM, DIFF BRG (87X96.8X2)	97-02	Y	AR	12458088
	3-D12	5.537	SHIM, DIFF BRG (87X96.8X1.9)	97-02	Y	AR	12458089
	3-D12	5.537	SHIM, DIFF BRG (87X96.8X1.8)	97-02	Y	AR	12458090
	3-D12	5.537	SHIM, DIFF BRG (87X96.8X1.7)	97-02	Y	AR	12458091
	3-D12	5.537	SHIM, DIFF BRG (87X96.8X1.6)	97-02	Y	AR	12458092
	3-D12	5.537	SHIM, DIFF BRG (87X96.8X1.5)	97-02	Y	AR	12458093
	3-D12	5.537	SHIM, DIFF BRG (87X96.8X1.4)	97-02	Y	AR	12458094
	3-D12	5.537	SHIM, DIFF BRG (87X96.8X1.3)	97-02	Y	AR	12458095
	3-D12	5.537	SHIM, DIFF BRG (87X96.8X1.25)	97-02	Y	AR	12458096
	3-D12	5.537	SHIM, DIFF BRG (87X96.8X1)	97-02	Y	AR	12458097
20.		N.S.	CUP				
21.		N.S.	CONE ASM				
22.	3-D12	5.510	BOLT, DIFF CASE (PART OF 16)	97-02	Y	10	12458085
23.		N.S.	CASE, DIFF (PLAIN HALF) (PART OF 16)				
24.		N.S.	SHAFT, DIFF P/GR (PART OF 16)				
25.	3-D12	5.511	DISC KIT, L/SLIP DIFF CLU (PART OF 16)	97-02	Y	2	12458083
26.	3-D10	5.422	RING, R/AXL SHF BRG RET (PART OF 16)	97-02	Y	2	12369463

cardiagn.com

27.		N.S.	GEAR-DIFFERENTIAAL RIGHT SIDE) (PART OF 16				
28.		N.S.	GEAR, DIFF PINION (PART OF 16)				
29.		N.S.	WASHER, DIFF P/GR THR				
30.		N.S.	GEAR, L/SLIP DIFF SI (PART OF 16)				
31.	3-D10	5.422	LOCK, R/AXL SHF (PART OF 16)	97-02	Y	1	12458084
32.	3-D10	5.420	SHAFT, R/AXL (PART OF 16)	97-02	Y	1	88893900
33.	3-D10	5.422	RING, R/AXL SHF BRG RET	97-02	Y	2	12369463
34.	3-D12	5.511	DISC KIT, L/SLIP DIFF CLU (PART OF 16)	97-02	Y	2	12458083
35.		N.S.	CASE, DIFF (FLANGED HALF) (PART OF 16)				
36.		N.S.	CONE, DIFF BRG				
37.		N.S.	CUP, DIFF BRG				
38.	3-D12	5.537	SHIM, DIFF BRG (87X96.8X2.2)	97-02	Y	AR	12458086
	3-D12	5.537	SHIM, DIFF BRG (87X96.8X2.1)	97-02	Y	AR	12458087
	3-D12	5.537	SHIM, DIFF BRG (87X96.8X2)	97-02	Y	AR	12458088
	3-D12	5.537	SHIM, DIFF BRG (87X96.8X1.9)	97-02	Y	AR	12458089
	3-D12	5.537	SHIM, DIFF BRG (87X96.8X1.8)	97-02	Y	AR	12458090
	3-D12	5.537	SHIM, DIFF BRG (87X96.8X1.7)	97-02	Y	AR	12458091
	3-D12	5.537	SHIM, DIFF BRG (87X96.8X1.6)	97-02	Y	AR	12458092
	3-D12	5.537	SHIM, DIFF BRG (87X96.8X1.5)	97-02	Y	AR	12458093
	3-D12	5.537	SHIM, DIFF BRG (87X96.8X1.4)	97-02	Y	AR	12458094
	3-D12	5.537	SHIM, DIFF BRG (87X96.8X1.3)	97-02	Y	AR	12458095
	3-D12	5.537	SHIM, DIFF BRG (87X96.8X1.25)	97-02	Y	AR	12458096
	3-D12	5.537	SHIM, DIFF BRG (87X96.8X1)	97-02	Y	AR	12458097
39.	3-D12	5.508	MAGNET, R/AXL HSG CHIP COLLECTOR (AC-DELCO #12458080)	97-02	Y	1	12458080

RPO DEFINITIONS
GU2 – AXLE,REAR,2.73 RATIO
GU6 – AXLE,REAR,3.42 RATIO
G90 – AXLE REAR 3.15 RATIO
LS1 – ENGINE GAS, 8 CYL, 5.7L, SFI, ALUMINUM ENGINE
LS6 – ENGINE GAS, 8 CYL, 5.7L, SFI, ALUMINUM, HIGH OUTPUT
MM6 – TRANSMISSION MAN 6 SPD, BORG WARNER, 85MM, 1ST 2.66, 6TH 0.50, O/D
M12 – TRANSMISSION MAN 6 SPD, TREMEC, 85MM, 1ST 2.97, 6TH 0.57, O/D
M30 – TRANSMISSION,AUTOMATIC 4 SPEED,4L60E,ELECTRONIC

cardiagn.com

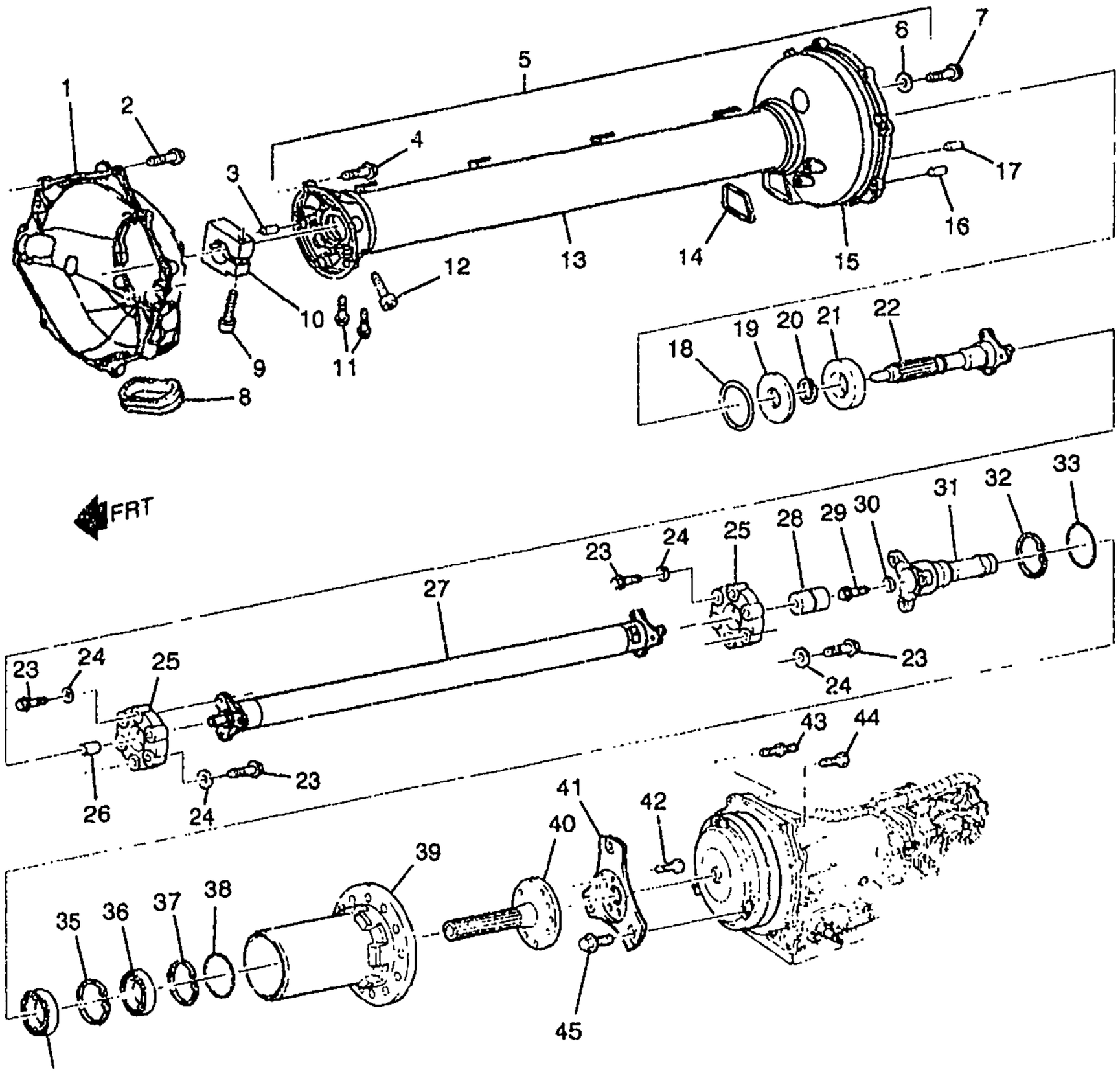

bc

1Y05-009

1997-1999 Y PROP SHAFT & SUPPORT DRIVE SHAFT (M30 AUTO TRANS)

1.	3-M24	0.683	HOUSING, FLYWHL	97-99	Y (M30)	1	12551118
2.		8.900	BOLT, HFH DOME HD M10X1.5X40 9, 8 7114M 20, 80D HDR PT (FLYWHL HSG)	97-99	(LS1, M30)	7	11516862
3.	3-D13	5.546	PIN, DRIVELINE SUPT LOC (PART OF 13)	97-99	Y	2	12456202
4.		8.900	BOLT, HFH DOME HD M10X1.5X40 9, 8 7114M 20, 80D HDR PT (DRIVELINE SUPT TO FRT BELLHOUSING) (POSN #2)	97-99		5	11516862

2001 GENERAL MOTORS SERVICE PARTS OPERATIONS-CHEVROLET--15Y

cardiagn.com

							1Y05-009
5.	3-D13	5.546	SUPPORT, DRIVELINE (CPS) (INCLS 7, 13, 15-18, 27)	97-99	Y	1	12564456
6.		N.S.	WASHER, DRIVELINE SUPPORT				
7.	3-D13	5.546	BOLT, DRIVELINE SUPT (PART OF 5)	97-99	Y	12	12456206
8.	3-M24	0.686	PLUG, FLYWHL HSG	97-99	Y (M30)	1	12557650
9.	3-D15	5.586	BOLT, PROP SHF HUB CLA	97-99	Y (M30)	1	12560341
10.	3-D15	5.586	CLAMP, PROP SHF HUB	97-99	Y (M30)	1	12560419
11.		N.S.	PLUG, DRIVELINE TUBE				
12.	3-D13	5.546	BOLT, DRIVELINE SUPT (POSN #3)	97	Y	2	12559127
	3-D13	5.546	PLUG, DRIVELINE SUPT HOLE (10.154)	98-99	Y	2	21075686
13.	3-D13	5.546	SUPPORT, DRIVELINE (TORQUE TUBE) (PART OF 5) (INCLS 3)	97-99	Y	1	12456224
14.	3-D13	5.546	PLUG, DRIVELINE SUPT HOLE	97-99	Y	1	12551987
15.	3-D13	5.546	ADAPTER, DRIVELINE SUPT RR (PART OF 5)	97-99	Y (M30)	1	12456225
16.	3-D13	5.546	PIN, DRIVELINE SUPT RR ADAP LOC (PART OF 5)	97-99	Y	2	12456202
17.	3-D13	5.546	PIN, DRIVELINE SUPT LOC (PART OF 5)	97-99	Y	2	12456205
18.	3-D14	5.556	SEAL, PROP SHF ENG FLG BRG (O RING) (RET) (PART OF 5)	97-99	Y	1	12456203
19.	3-D14	5.556	SLINGER, PROP SHF ENG FLG BRG (INPUT SHF) (PART OF 27)	97-99	Y	1	12456208
20.	3-D14	5.556	RING, PROP SHF ENG FLG BRG RET (INPUT SHF) (PART OF 27)	97-99	Y	1	12456209
21.	3-D14	5.556	BEARING, PROP SHF ENG FLG (INPUT SHF) (PART OF 27)	97-99	Y	1	12456210
22.	3-D13	5.544	SHAFT, PROP SHF SPLINE	97-99	Y (M30)	1	88894023
23.	3-D13	5.545	BOLT, PROP SHF CPLG (PART OF 27)	97-99	Y	12	12456213
24.		N.S.	WASHER, PROP SHF CPLG				
25.		N.S.	COUPLING, PROP SHF (PART OF 27)				
26.	3-D14	5.556	GUIDE, PROP SHF ENG FLG (BUSHING-INPUT SHF) (PART OF 27)	97-99	Y	1	12456211
	3-D14	5.556	GUIDE, PROP SHF ENG FLG (BUSHING-INPUT SHF) (PART OF 27)	97-99	Y (M30)	1	88893996
27.	3-D13	5.544	SHAFT, PROP (PART OF 5) (INCLS 19-21, 23, 25, 26, 28, 29, 32-39)	97-99	Y (M30)	1	12456226
	3-D13	5.544	SHAFT, PROP (PART OF 5) (INCLS 19-21, 23, 25, 26, 28, 29, 32-39)	97-99	Y (M30)	1	88894016
28.	3-D14	5.556	INSULATOR, PROP SHF TRANS FLG (PART OF 27)	97-99	Y	1	12456214
29.	3-D14	5.556	BOLT, T/CV INPUT SHF GDE (PART OF 27)	97-99	Y (M30)	1	12456227
30.		N.S.	WASHER, HUB				
31.		N.S.	HUB, PROP SHF	97-99			
32.	3-D14	5.556	RING, PROP SHF TRANS FLG FRT BRG RET (FRT RET) (PART OF 27)	97-99	Y	1	12456216

cardiagn.com

							1Y05-009
33.	3-D14	5.556	SEAL, PROP SHF TRANS FLG FRT BRG (O RING) (PART OF 27)	97-99	Y	1	12456218
34.	3-D14	5.556	BEARING, PROP SHF TRANS FLG FRT (PART OF 27)	97-99	Y	1	12456217
35.	3-D14	5.556	RING, PROP SHF TRANS FLG FRT BRG RET (FRT RET) (RR RET) (PART OF 27)	97-99	Y	1	12456216
	3-D14	5.556	RING, PROP SHF TRANS FLG FRT BRG RET (RR RET) (RR RET) (PART OF 27)	97-99	Y	1	12456219
36.	3-D14	5.556	BEARING, PROP SHF TRANS FLG RR (PART OF 27)	97-99	Y	2	12456221
37.	3-D14	5.556	RING, PROP SHF TRANS FLG RR BRG RET (PART OF 27) (INNER FACE)	97-99	Y	1	12456222
	3-D14	5.556	RING, PROP SHF TRANS FLG RR BRG RET (PART OF 27) (BRG HOUSING TO TORQUE TUBE BELL HOUSING)	97-99	Y (M30)	1	88894017
	3-D14	5.556	RING, PROP SHF TRANS FLG RR BRG RET (PART OF 27) (OUTER FACE)	97-99	Y (M30)	1	88894018
38.	3-D14	5.556	SEAL, PROP SHF TRANS SHF RR BRG (O RING) (PART OF 27)	97-99	Y	2	12456220
39.	3-D14	5.556	HOUSING, PROP SHF TRANS FLG BRG (OUTPUT SHF) (PART OF 27)	97-99	Y (M30)	1	12456228
40.	3-D13	5.544	SHAFT, RR PROP SHF (SPLINED)	97-99	Y (M30)	1	88894020
41.	3-M24	0.666	PLATE, A/TRNS FLEX (4.116)	97-99	Y (M30)	1	12551134
42.	3-M24	0.669	BOLT, A/TRNS FLEX PLT (M10X1.5X15 12.5 THD) (4.115) (AC-DELCO #1261968)	97-99	Y (M30)	8	1261968
43.	3-N21 3-A9	4.085	STUD, TRANSAXLE (8 O'CLOCK, 10 O'CLOCK, 1 O'CLOCK POSNS)	97-99	Y (M30)	3	12553527
44.		8.900	BOLT, HFH DOME HD M10X1.5X40 9, 8 7114M 20, 80D HDR PT (TRANS TO DRIVELINE SUPT)	97-99		4	11516862
45.	3-A10	4.115	BOLT, TRANS T/CV (M10X1.5X15 12.5 THD) (AC-DELCO #1261968)	97-99	Y (M30)	3	1261968

RPO DEFINITIONS
LS1 -- ENGINE GAS, 8 CYL, 5.7L, SFI, ALUMINUM ENGINE
M30 -- TRANSMISSION,AUTOMATIC 4 SPEED,4L60E,ELECTRONIC

cardiagn.com

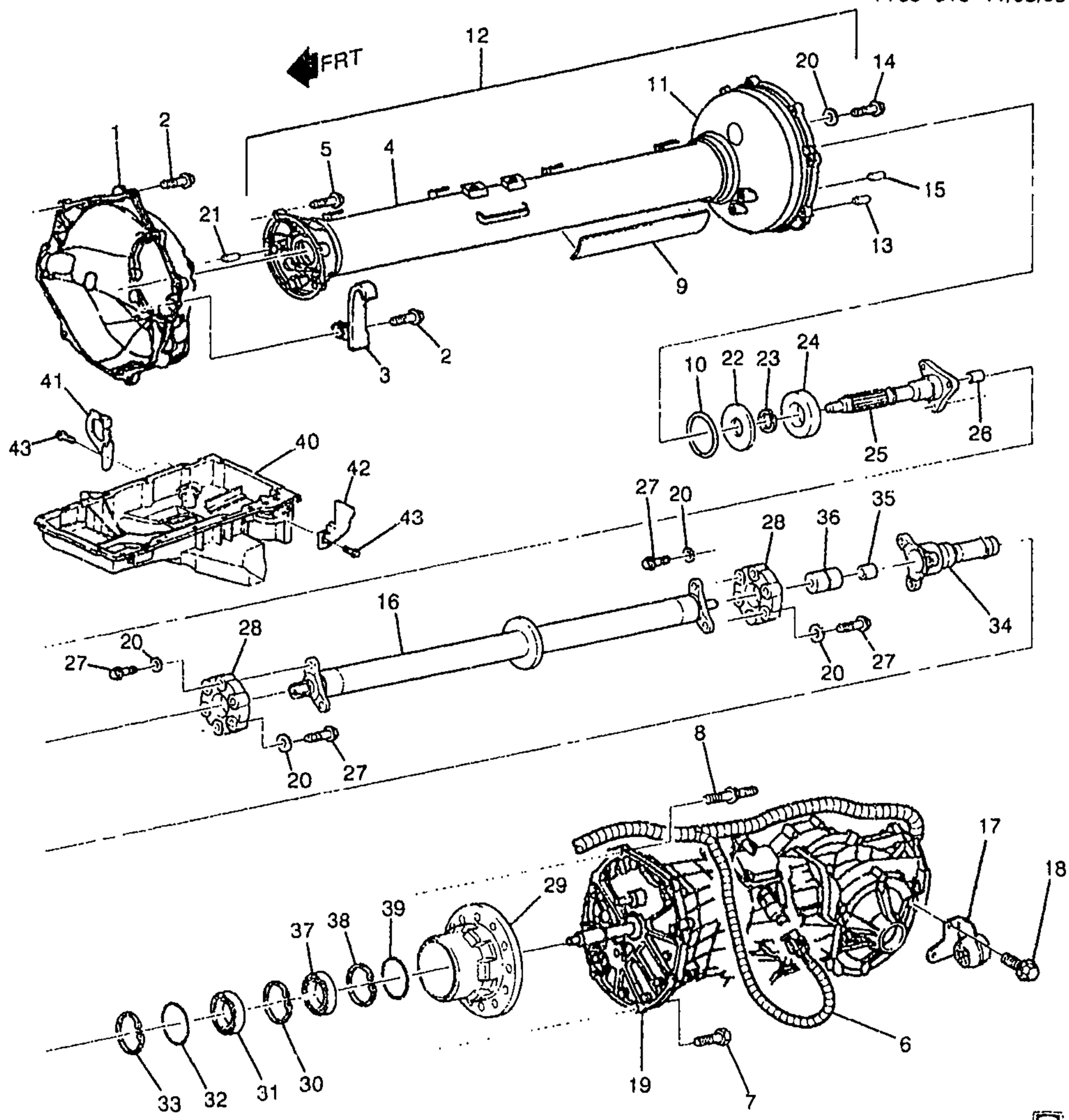

1Y05-010

1997-1999 Y PROP SHAFT & SUPPORT DRIVE SHAFT (MM6 MAN TRANS)

1.	3-M24	0.683	HOUSING, FLYWHL	97-99	Y (MM6)	1 12554980
2.		8.900	BOLT, HFH DOME HD M10X1.5X40 9, 8 7114M 20, 80D HDR PT (FLYWHL HSG)	97-99	.....	7 11516862
3.	3-M24	0.785	CLIP, CLU ACTR CYL HOSE (PRESS HOSE TO CLU HSG)	97-99	Y (MM6)	1 12558237

cardiagn.com

						1Y05-010	
4.	3-D13	5.546	SUPPORT, DRIVELINE (PART OF 12) (INCLS 21)	97-99	Y	1	12456201
5.		8.900	BOLT, HFH DOME HD M10X1.5X40 9, 8 7114M 20, 80D HDR PT (DRIVELINE SUPT TO FRT BELLHOUSING)	97-99	(LS1, MM6)	5	11516862
6.	3-M25	2.480	HARNESS, TRANS WRG (AC-DELCO #12163196)	97	Y (MM6) (EXC F45)	1	12163196
	3-M25	2.480	HARNESS, TRANS WRG (AC-DELCO #12163706)	97	Y (MM6, F45)	1	12163706
	3-M25	2.480	HARNESS, TRANS WRG (AC-DELCO #12163196)	98	Y (MM6) (EXC F45, JAG, VD1)	1	12163196
	3-M25	2.480	HARNESS, TRANS WRG (AC-DELCO #12163706)	98	Y (MM6, F45) (EXC JAG, VD1)	1	12163706
	3-M25	2.480	HARNESS, TRANS WRG	98	Y (MM6, JAG) (EXC F45, VD1)	1	12163791
	3-M25	2.480	HARNESS, TRANS WRG	98	Y (MM6, F45, JAG) (EXC VD1)	1	12163793
	3-M25	2.480	HARNESS, TRANS WRG (AC-DELCO #12189827)	99	Y (MM6) (EXC F45, VD1)	1	12189827
	3-M25	2.480	HARNESS, TRANS WRG (AC-DELCO #12189829)	99	Y (MM6, F45) (EXC VD1)	1	12189829
	3-N27	13.100	CONNECTOR, INLINE-TO RR BODY HARN (WHITE) (8-WAY F W/LEADS) (2.535) (AC-DELCO #PT444)	97-99	Y	1	12117271
	3-N14	2.530	CONNECTOR, INLINE-TO TRANS (8-WAY M W/LEADS) (AC-DELCO #PT443)	97-99	Y	1	12117270
	3-N14	2.530	CONNECTOR, INLINE-TO TRANS (14-WAY F) (W/O LEADS) (M/P 100W) (4.115) (CAN ALSO REPL 13-WAY CONN)	97-99	Y	1	12160493
	3-N14	2.530	CONNECTOR, INLINE-TO TRANS (20-WAY M, W/O LEADS)	97-99	Y (MM6, M30)	1	12160542
	3-N14	2.530	CONNECTOR, INLINE-TO TRANS (14-WAY F) (W/LEADS) (ACTUALLY 20-WAY W/6 CAVITIES MOLDED) (AC-DELCO #PT1008)	97-99	Y	1	15305857
	3-N14	2.530	CONNECTOR, INLINE-TO TRANS (BLACK) (2-WAY M) (W/LEADS) (2.535) (AC-DELCO #PT107)	98-99	Y	1	12085485
	3-N14	2.530	CONNECTOR, INLINE-TO TRANS (20-WAY F) (W/O LEADS)	98	Y67	2	12160280
	3-N14	2.530	CONNECTOR, INLINE-TO TRANS (BLACK) (10-WAY M) (AC-DELCO #PT505)	99	Y	1	12117372
	3-N14	2.530	CONNECTOR, INLINE-TO TRANS (BLACK) (10-WAY F) (W/LEADS) (AC-DELCO #PT588)	99	Y	1	12125676
	3-N14	2.530	CONNECTOR, INLINE-TO I/P HARN (10-WAY F W/LEADS) (2.535) (AC-DELCO #PT150) ...	97-99	Y	1	12101762

cardiagn.com

						1Y05-010	
	3-N14	2.530	CONNECTOR, INLINE-TO I/P HARN (BLUE) (10-WAY F) (W/LEADS) (AC PT224) (2.535) (AC-DELCO #PT224)	97-99	Y	1	12101832
	3-N14	2.530	CONNECTOR, INLINE-TO I/P HARN (4-WAY F W/LEADS) (2.535) (AC-DELCO #PT382) ...	97-99	Y (UZ6, U1S)	1	12102900
	3-N14	2.530	CONNECTOR, INLINE-TO I/P HARN (8-WAY M W/LEADS) (AC-DELCO #PT443)	97-98	Y	1	12117270
	3-N14	2.530	CONNECTOR, INLINE-TO I/P HARN (3-WAY M W/LEADS) (AC-DELCO #PT504)	97	Y	1	12117371
	3-N14	2.530	CONNECTOR, INLINE-TO I/P HARN (20-WAY M, W/O LEADS)	97-99	Y	1	12160542
	3-N14	2.530	CONNECTOR, INLINE-TO I/P HARN (6-WAY F W/LEADS) (13.090) (AC-DELCO #PT1032) .	97-99	Y	2	15305888
	3-N14	2.530	CONNECTOR, INLINE-TO I/P HARN (GRAY) (8-WAY F) (W/LEADS) (2.535) (AC-DELCO #PT214)	99	Y	1	12101822
	3-M25	2.480	HARNESS, TRANS WRG (AC-DELCO #12189908)	98	Y (MM6, F45, VD1) (EXC JAG) (EXPORT) ..	1	12189908
	3-M25	2.480	HARNESS, TRANS WRG (AC-DELCO #12189909)	98	Y (MM6, VD1) (EXC F45, JAG) (EXPORT) ..	1	12189909
	3-M25	2.480	HARNESS, TRANS WRG	98	Y (MM6, F45, JAG, VD1) (EXPORT)	1	12189912
	3-M25	2.480	HARNESS, TRANS WRG	98	Y (MM6, JAG, VD1) (EXC F45) (EXPORT) ..	1	12189913
	3-M25	2.480	HARNESS, TRANS WRG (ENHANCE EVAP) (AC-DELCO #12189914)	99	Y (MM6, F45, VD1) (EXPORT)	1	12189914
	3-M25	2.480	HARNESS, TRANS WRG (ENHANCE EVAP) (AC-DELCO #12189915)	99	Y (MM6, VD1) (EXC F45) (EXPORT)	1	12189915
7.		8.900	BOLT, HFH DOME HD M10X1.5X40 9, 8 7114M 20, 80D HDR PT (M/T TO DRIVELINE SUPT)	97-99	.....	7	11516862
8.	3-N21 3-A9	4.085	STUD, TRANSAXLE (1 O'CLOCK POSN, RR VIEW)	97-99	Y (MM6)	1	12553527
9.	3-N24	8.808	LABEL, DRIVETRAIN REMOVAL NTC (PART OF 12)	97	Y	1	12556699
	3-N24	8.808	LABEL, DRIVETRAIN REMOVAL NTC (PART OF 12)	98-99	Y (MM6)	1	12556699
10.	3-D14	5.556	SEAL, PROP SHF ENG FLG BRG (O RING) (RET) (PART OF 12) ...	97-99	Y	1	12456203
11.	3-D13	5.546	ADAPTER, DRIVELINE SUPT RR (PART OF 12)	97-99	Y (MM6)	1	12456204
12.	3-D13	5.546	SUPPORT, DRIVELINE (COMPLETE ASM) (COMPONENT PARTS SERVICED) (CPS) (INCLS 4, 9-11, 13-16, 25)	97-99	Y (MM6)	1	12564457

cardiagn.com

						1Y05-010	
	3-D13	5.546	SUPPORT, DRIVELINE (PART OF DRIVELINE SUPPORT COMPLETE ASM) (INCLS HOUSING AND PIN) (CPS) (INCLS 4, 9-11, 13-16, 25)	97-99	Y (MM6)	1	12456201
13.	3-D13	5.546	PIN, DRIVELINE SUPT RR ADAP LOC (PART OF 12)	97-99	Y	2	12456202
14.	3-D13	5.546	BOLT, DRIVELINE SUPT (PART OF 12)	97-99	Y (MM6)	11	12456206
	3-D13	5.546	BOLT, DRIVELINE SUPT (TO FRT BELLHOUSING) (POSN #3) (PART OF 12) (HFH DOME HD M10X1.5X40 9, 8 7114M 30, 80D HDR PT) (8.900)	97-99	Y	5	11516862
15.	3-D13	5.546	PIN, DRIVELINE SUPT LOC (TORQUE TUBE FRT HSG) (TORQUE TUBE RR HSG) (PART OF 12)	97-99	Y	2	12456202
	3-D13	5.546	PIN, DRIVELINE SUPT LOC (TORQUE TUBE RR HSG) (TORQUE TUBE RR HSG) (PART OF 12)	97-99	Y	2	12456205
16.	3-D13	5.544	SHAFT, PROP (PART OF 12) (INCLS 22-24, 26-33, 35-39) ..	97-99	Y (MM6)	1	12456207
17.	3-A9	4.081	DAMPENER, TRANSAXLE VIB ...	97-99	Y	1	12564737
18.		8.900	BOLT, HFH, M8X1.25X20, 17THD, 18OD (TRANSAXLE VIB DPNR) ..	97-99	.....	2	11515756
19.		N.S.	TRANSAXLE, MAN (3.42 RATIO) (CPS) (FOR DETAILS SEE GRP 4)		.....		
		N.S.	TRANSAXLE, MAN (3.42 RATIO) (CPS) (FOR DETAILS SEE GRP 4)		.....		
20.		N.S.	WASHER		.....		
21.	3-D13	5.546	PIN, DRIVELINE SUPT LOC (TORQUE TUBE FRT HSG) (TORQUE TUBE FRT HSG) (PART OF 4)	97-99	Y	2	12456202
	3-D13	5.546	PIN, DRIVELINE SUPT LOC (TORQUE TUBE RR HSG) (TORQUE TUBE FRT HSG) (PART OF 4)	97-99	Y	2	12456205
22.	3-D14	5.556	SLINGER, PROP SHF ENG FLG BRG (PART OF 16)	97-99	Y	1	12456208
23.	3-D14	5.556	RING, PROP SHF ENG FLG BRG RET (PART OF 16)	97-99	Y	1	12456209
24.	3-D14	5.556	BEARING, PROP SHF ENG FLG (PART OF 16)	97-99	Y	1	12456210
25.		N.S.	INPUT SHAFT (PART OF 12)		....		
26.	3-D14	5.556	GUIDE, PROP SHF ENG FLG (PART OF 16)	97-99	Y	1	12456211
27.	3-D13	5.545	BOLT, PROP SHF CPLG (PART OF 16)	97-99	Y	12	12456213
28.		N.S.	COUPLING, PROP SHF (PART OF 16)		.....		
29.	3-D14	5.556	HOUSING, PROP SHF TRANS FLG BRG (PART OF 16)	97-99	Y (MM6)	1	12456223
30.	3-D14	5.556	RING, PROP SHF TRANS FLG FRT BRG RET (FRT RET) (RR RET) (PART OF 16)	97-99	Y	1	12456216

cardiagn.com

						1Y05-010	
	3-D14	5.556	RING, PROP SHF TRANS FLG FRT BRG RET (RR RET) (RR RET) (PART OF 16)	97-99	Y	1	12456219
31.	3-D14	5.556	BEARING, PROP SHF TRANS FLG FRT (PART OF 16)	97-99	Y	1	12456217
32.	3-D14	5.556	SEAL, PROP SHF TRANS FLG FRT BRG (O RING) (PART OF 16)	97-99	Y	1	12456218
33.	3-D14	5.556	RING, PROP SHF TRANS FLG FRT BRG RET (FRT RET) (FRT RET) (PART OF 16)	97-99	Y	1	12456216
	3-D14	5.556	RING, PROP SHF TRANS FLG FRT BRG RET (RR RET) (FRT RET) (PART OF 16)	97-99	Y	1	12456219
34.		N.S.	HUB				
35.	3-D14	5.556	GUIDE, PROP SHF TRANS FLG (PART OF 16)	97-99	Y (MM6)	1	12456215
36.	3-D14	5.556	INSULATOR, PROP SHF TRANS FLG (PART OF 16)	97-99	Y	1	12456214
37.	3-D14	5.556	BEARING, PROP SHF TRANS FLG RR (PART OF 16)	97-99	Y	2	12456221
38.	3-D14	5.556	RING, PROP SHF TRANS FLG RR BRG RET (PART OF 16) (INNER FACE)	97-99	Y	1	12456222
39.	3-D14	5.556	SEAL, PROP SHF TRANS SHF RR BRG (O RING) (PART OF 16)	97-99	Y	2	12456220
40.	3-M25	1.426	PAN, OIL (GULL-WING OIL PAN)	97-99	Y (LS1)	1	12561828
41.	3-N22 3-A9	4.105	COVER, TRANS (AC-DELCO #12562042)	97-99	Y (LS1)	RH	12562042
42.	3-A9	4.105	COVER, TRANS (AC-DELCO #12565649)	97-99	Y (LS1)	LH	12565649
43.		8.900	BOLT, HEX W/CON WA, M6X1X20 (TRANS CVR)	97-99		2	11514623

RPO DEFINITIONS
F45 - CHASSIS CONTINUOUS VALVE REAL TIME DAMPING
JAG - BRAKE PROVISIONS ABS LOCATION
LS1 - ENGINE GAS, 8 CYL, 5.7L, SFI, ALUMINUM ENGINE
MM6 - TRANSMISSION MAN 6 SPD, BORG WARNER, 85MM, 1ST 2.66, 6TH 0.50, O/D
M30 - TRANSMISSION,AUTOMATIC 4 SPEED,4L60E,ELECTRONIC
UZ6 - SPEAKER SYSTEM 6, QUAD FRT DR MTD, DUAL QTR MTD
U1S - PLAYER MULTIPLE COMPACT DISC
VD1 - PROVISION OPTIONS,EUROPE(EXPORT)

cardiagn.com

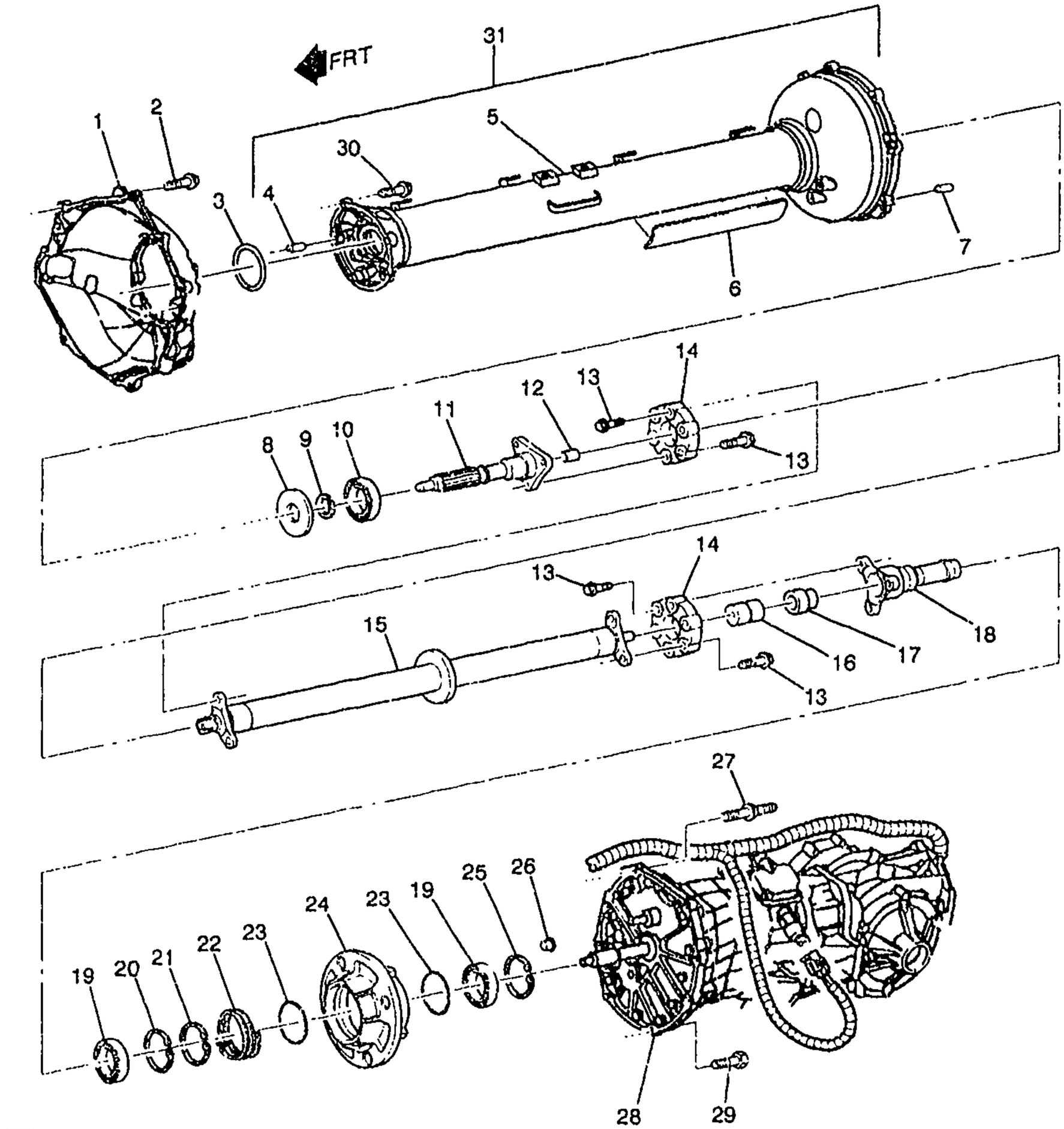

bc

1Y05-020

2000 Y PROP SHAFT & SUPPORT DRIVE SHAFT (MM6 MAN TRANS)
2001-2002 Y PROP SHAFT & SUPPORT DRIVE SHAFT (MM6,M12 MAN TRANS)

1.	3-M24	0.683	HOUSING, FLYWHL	00	Y (MM6)	1 12554980
	3-M24	0.683	HOUSING, FLYWHL	01-02	Y (MM6, M12)	1 12554980
2.		8.900	BOLT, HFH DOME HD M10X1 5X40 9, 8 7114M 20, 80D HDR PT (FLYWHL HSG)	00-02	.....	7 11516862

cardiagn.com

							1Y05-020
3.	3-D14	5.556	SEAL, PROP SHF ENG FLG BRG (O RING)	00-02	Y	1	12456203
4.	3-D13	5.546	PIN, DRIVELINE SUPT RR ADAP LOC (PART OF 5)	00-02	Y	2	12456202
5.	3-D13	5.546	SUPPORT, DRIVELINE (INCLS 4) (W/PINS)	01-02	Y (MM6, M12)	1	88893994
	3-D13	5.546	SUPPORT, DRIVELINE (INCLS 4) (W/PINS)	00	Y (MM6)	1	88893994
6.	3-N24	8.808	LABEL, DRIVETRAIN REMOVAL NTC	00	Y (MM6, M30)	1	12556699
	3-N24	8.808	LABEL, DRIVETRAIN REMOVAL NTC	01-02	Y (MM6, M12, M30)	1	12556699
7.	3-D13	5.546	PIN, DRIVELINE SUPT RR ADAP LOC	00-02	Y	2	12456202
8.	3-D14	5.556	SLINGER, PROP SHF ENG FLG BRG (PART OF 15)	00-02	Y	1	12456208
9.	3-D14	5.556	RING, PROP SHF ENG FLG BRG RET (PART OF 15)	00-02	Y	1	12456209
10.	3-D14	5.556	BEARING, PROP SHF ENG FLG (PART OF 15)	00-02	Y	1	12456210
11.	3-D13	5.544	SHAFT, PROP SHF SPLINE	00	Y (MM6)	1	88894030
	3-D13	5.544	SHAFT, PROP SHF SPLINE	01-02	Y (MM6, M12)	1	88894028
12.	3-D14	5.556	GUIDE, PROP SHF ENG FLG (PART OF 15)	00-02	Y (M30, MM6)	1	88893996
	3-D14	5.556	GUIDE, PROP SHF ENG FLG (PART OF 15)	01-02	Y (M12)	1	88893996
13.	3-D13	5.545	BOLT, PROP SHF CPLG	00	Y (MM6)	12	12456213
	3-D13	5.545	BOLT, PROP SHF CPLG	01-02	Y (MM6, M12)	12	88894027
14.		N.S.	COUPLING, PROP SHF (PART OF 15)				
15.	3-D13	5.544	SHAFT, PROP (PART OF 5) (INCLS 8-10, 12-14, 16-26)	00	Y (MM6)	1	88893995
	3-D13	5.544	SHAFT, PROP (PART OF 5) (INCLS 8-10, 12-14, 16-26)	01-02	Y (MM6, M12)	1	88894025
16.	3-D14	5.556	INSULATOR, PROP SHF TRANS FLG (PART OF 15)	00-02	Y	1	12456214
17.	3-D14	5.556	GUIDE, PROP SHF TRANS FLG (PART OF 15)	00	Y (MM6)	1	88894015
	3-D14	5.556	GUIDE, PROP SHF TRANS FLG (PART OF 15)	01-02	Y (MM6, M12)	1	88894015
18.	3-D13	5.545	HUB, PROP SHF (PART OF 15)	00	Y (MM6)	1	88894031
	3-D13	5.545	HUB, PROP SHF (PART OF 15)	01-02	Y (MM6)	1	88894029
	3-D13	5.545	HUB, PROP SHF (PART OF 15)	01-02	Y (M12)	1	88894029
19.	3-D14	5.556	BEARING, PROP SHF TRANS FLG RR (PART OF 15)	00-02	Y	2	12456221
20.	3-D14	5.556	RING, PROP SHF TRANS FLG RR BRG RET (PART OF 15) (INNER FACE)	00-02	Y	1	12456222
21.	3-D14	5.556	RING, PROP SHF TRANS FLG RR BRG RET (PART OF 15) (BRG HOUSING TO TORQUE TUBE BELL HOUSING)	00-02	Y (M30, MM6)	1	88894017
	3-D14	5.556	RING, PROP SHF TRANS FLG RR BRG RET (PART OF 15) (BRG HOUSING TO TORQUE TUBE BELL HOUSING)	01-02	Y (M12)	1	88894017
22.	3-D15	5.586	WASHER PROP SHF (PART OF 15)	00-02	Y (MM6)	1	88894032

cardiagn.com

							1Y05-020
	3-D15	5.586	WASHER, PROP SHF (PART OF 15)	01-02	Y (M12)	1	88894032
23.	3-D14	5.556	SEAL, PROP SHF TRANS SHF RR BRG (O RING) (PART OF 15)	00-02	Y	2	12456220
24.	3-D14	5.556	HOUSING, PROP SHF TRANS FLG BRG (PART OF 15)	00-02	Y (M30, MM6)	1	88893997
	3-D14	5.556	HOUSING, PROP SHF TRANS FLG BRG (PART OF 15)	01-02	Y (M12)	1	88893997
25.	3-D14	5.556	RING, PROP SHF TRANS FLG RR BRG RET (PART OF 15) (OUTER FACE)	00-02	Y (M30, MM6)	1	88894018
	3-D14	5.556	RING, PROP SHF TRANS FLG RR BRG RET (PART OF 15) (OUTER FACE)	01-02	Y (M12)	1	88894018
26.	3-D14	5.556	PLUG, RR PROP SHF YOKE LUB HOLE (PART OF 15)	00-02	Y	3	88894019
27.	3-N21 3-A9	4.085	STUD, TRANSAXLE (1 O'CLOCK POSN, RR VIEW)	00	Y (MM6)	1	12553527
	3-N21 3-A9	4.085	STUD, TRANSAXLE (1 O'CLOCK POSN, RR VIEW)	01-02	Y (MM6, M12)	1	12553527
28.		N.S.	TRANSAXLE, MAN (3.42 RATIO) (CPS) (FOR DETAILS SEE GRP 4)				
29.		8.900	BOLT, HFH DOME HD M10X1.5X40 9, 8 7114M 20, 80D HDR PT (M/T TO DRIVELINE SUPT)	00-02		7	11516862
30.		8.900	BOLT, HFH DOME HD M10X1.5X40 9, 8 7114M 20, 80D HDR PT (DRIVELINE SUPT TO FRT BELLHOUSING)	00-02	(LS1, MM6)	5	11516862
31.	3-D13	5.546	SUPPORT, DRIVELINE (COMPLETE ASM) (COMPONENT PARTS SERVICED)	00-02	Y (MM6)	1	12564457
	3-D13	5.546	SUPPORT, DRIVELINE (COMPLETE ASM) (COMPONENT PARTS SERVICED)	01-02	Y (M12)	1	12564457

RPO DEFINITIONS
LS1 – ENGINE GAS, 8 CYL, 5.7L, SFI, ALUMINUM ENGINE
MM6 – TRANSMISSION MAN 6 SPD, BORG WARNER, 85MM, 1ST 2.66, 6TH 0.50, O/D
M12 – TRANSMISSION MAN 6 SPD, TREMEC, 85MM, 1ST 2.97, 6TH 0.57, O/D
M30 – TRANSMISSION,AUTOMATIC 4 SPEED,4L60E,ELECTRONIC

cardiagn.com

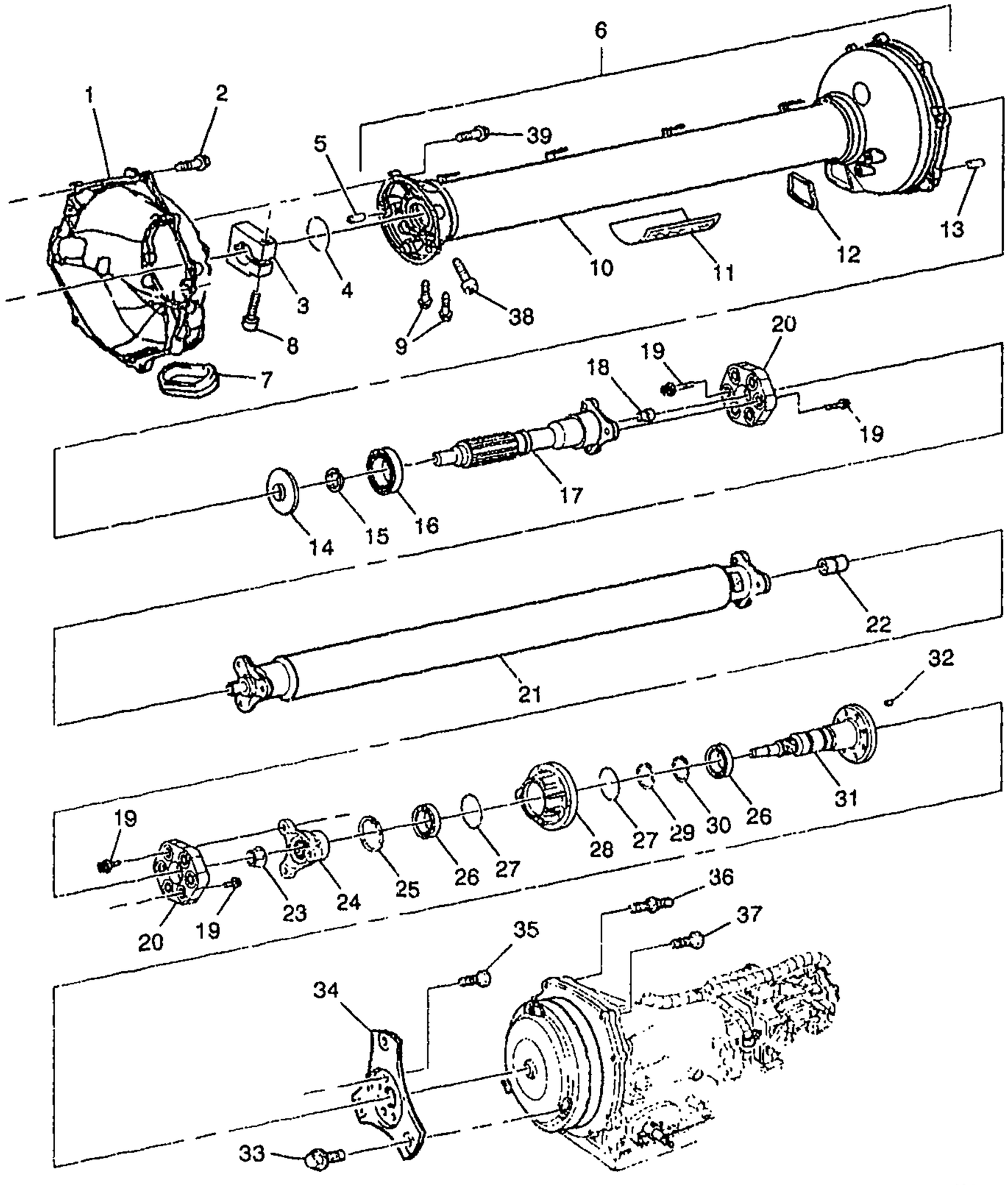

bc

1Y05-018

2000-2002 Y PROP SHAFT & SUPPORT DRIVE SHAFT (M30 AUTO TRANS)

1.	3-M24	0.683	HOUSING, FLYWHL	00-02	Y (M30)	1	12551118
2.		8.900	BOLT, HFH DOME HD M10X1.5X40 9, 8 7114M 20, 80D HDR PT (FLYWHL HSG)	00-02	(LS1, M30)	7	11516862
3.	3-D15	5.586	CLAMP, PROP SHF HUB	00-02	Y (M30)	1	12560419
4.	3-D14	5.556	SEAL, PROP SHF ENG FLG BRG (O RING)	00-02	Y	1	12456203

cardiagn.com

5.	3-D13	5.546	PIN, DRIVELINE SUPT RR ADAP LOC (PART OF 10)	00-02	Y	2	12456202
6.	3-D13	5.546	SUPPORT, DRIVELINE (COMPLETE ASM) (COMPONENT PARTS SERVICED)	00-02	Y (M30)	1	12564456
7.	3-M24	0.686	PLUG, FLYWHL HSG	00-02	Y (M30)	1	12557650
8.	3-D15	5.586	BOLT, PROP SHF HUB CLA	00-02	Y (M30)	1	12560341
9.	3-D13	5.546	BOLT, DRIVELINE SUPT (TO FRT BELLHOUSING) (POSN #3) (HFH DOME HD M10X1.5X40 9. 8 7114M 30. 80D HDR PT) (8.900)	00-02	Y	5	11516862
10.	3-D13	5.546	SUPPORT, DRIVELINE (INCLS 5)	00-02	Y (M30)	1	88893999
11.	3-N24	8.808	LABEL, DRIVETRAIN REMOVAL NTC	00	Y (MM6, M30)	1	12556699
	3-N24	8.808	LABEL, DRIVETRAIN REMOVAL NTC	01-02	Y (MM6, M12, M30)	1	12556699
12.	3-D13	5.546	PLUG, DRIVELINE SUPT HOLE	00-02	Y (M30)	1	12551987
	3-D13	5.546	PLUG, DRIVELINE SUPT HOLE (10.154)	00-02	Y	2	21075686
13.	3-D13	5.546	PIN, DRIVELINE SUPT RR ADAP LOC	00-02	Y	2	12456202
14.	3-D14	5.556	SLINGER, PROP SHF ENG FLG BRG	00-02	Y	1	12456208
15.	3-D14	5.556	RING, PROP SHF ENG FLG BRG RET	00-02	Y	1	12456209
16.	3-D14	5.556	BEARING, PROP SHF ENG FLG	00-02	Y	1	12456210
17.	3-D13	5.544	SHAFT, PROP SHF SPLINE	00-02	Y (M30)	1	88894023
18.	3-D14	5.556	GUIDE, PROP SHF ENG FLG	00-02	Y (M30, MM6)	1	88893996
19.	3-D13	5.545	BOLT, PROP SHF CPLG	00-02	Y (M30)	12	12456213
20.		N.S.	COUPLING, PROP SHF				
21.	3-D13	5.544	SHAFT, PROP	00-02	Y (M30)	1	88894016
22.	3-D14	5.556	INSULATOR, PROP SHF TRANS FLG	00-02	Y	1	12456214
23.	3-D13	5.545	NUT, PROP SHF CPLG	00-02	Y (M30)	1	88894022
24.	3-D13	5.545	HUB, PROP SHF	00-02	Y (M30)	1	88894021
25.	3-D14	5.556	RING, PROP SHF TRANS FLG RR BRG RET (INNER FACE)	00-02	Y	1	12456222
26.	3-D14	5.556	BEARING, PROP SHF TRANS FLG RR	00-02	Y	2	12456221
27.	3-D14	5.556	SEAL, PROP SHF TRANS SHF RR BRG (O RING)	00-02	Y	2	12456220
28.	3-D14	5.556	HOUSING, PROP SHF TRANS FLG BRG	00-02	Y (M30, MM6)	1	88893997
29.	3-D14	5.556	RING, PROP SHF TRANS FLG RR BRG RET (BRG HOUSING TO TORQUE TUBE BELL HOUSING)	00-02	Y (M30, MM6)	1	88894017
30	3-D14	5.556	RING, PROP SHF TRANS FLG RR BRG RET (OUTER FACE)	00-02	Y (M30, MM6)	1	88894018
31.	3-D13	5.544	SHAFT, RR PROP SHF (SPLINED)	00-02	Y (M30)	1	88894020
32.	3-D14	5.556	PLUG, RR PROP SHF YOKE LUB HOLE	00-02	Y	3	88894019
33.	3-A10	4.115	BOLT, TRANS T/CV (M10X1.5X15 12.5 THD) (AC-DELCO #1261968)	00-02	Y (M30)	3	1261968
34.	3-M24	0.666	PLATE, A/TRNS FLEX (4.116)	00-02	Y (M30)	1	12551134

cardiagn.com

35.	3–M24	0.669	BOLT, A/TRNS FLEX PLT (M10X1.5X15 12.5 THD) (4.115) (AC–DELCO #1261968)	00–02	Y (M30)	8	1261968
36.	3–N21 3–A9	4.085	STUD, TRANSAXLE (8 O'CLOCK, 10 O'CLOCK, 1 O'CLOCK POSNS)	00–02	Y (M30)	3	12553527
37.	3–A9	4.085	BOLT, TRANS (AUTO TRANSAXLE TO DRIVELINE SUPPORT) (HFH DOME HD M10X1.5X40 9, 8 7114M 30, 80D HDR PT) (8.900)	00–02	Y (M30)	4	11516862

RPO DEFINITIONS
LS1 – ENGINE GAS, 8 CYL, 5.7L, SFI, ALUMINUM ENGINE
MM6 – TRANSMISSION MAN 6 SPD, BORG WARNER, 85MM, 1ST 2.66, 6TH 0.50, O/D
M12 – TRANSMISSION MAN 6 SPD, TREMEC, 85MM, 1ST 2.97, 6TH 0.57, O/D
M30 – TRANSMISSION,AUTOMATIC 4 SPEED,4L60E,ELECTRONIC

cardiagn.com

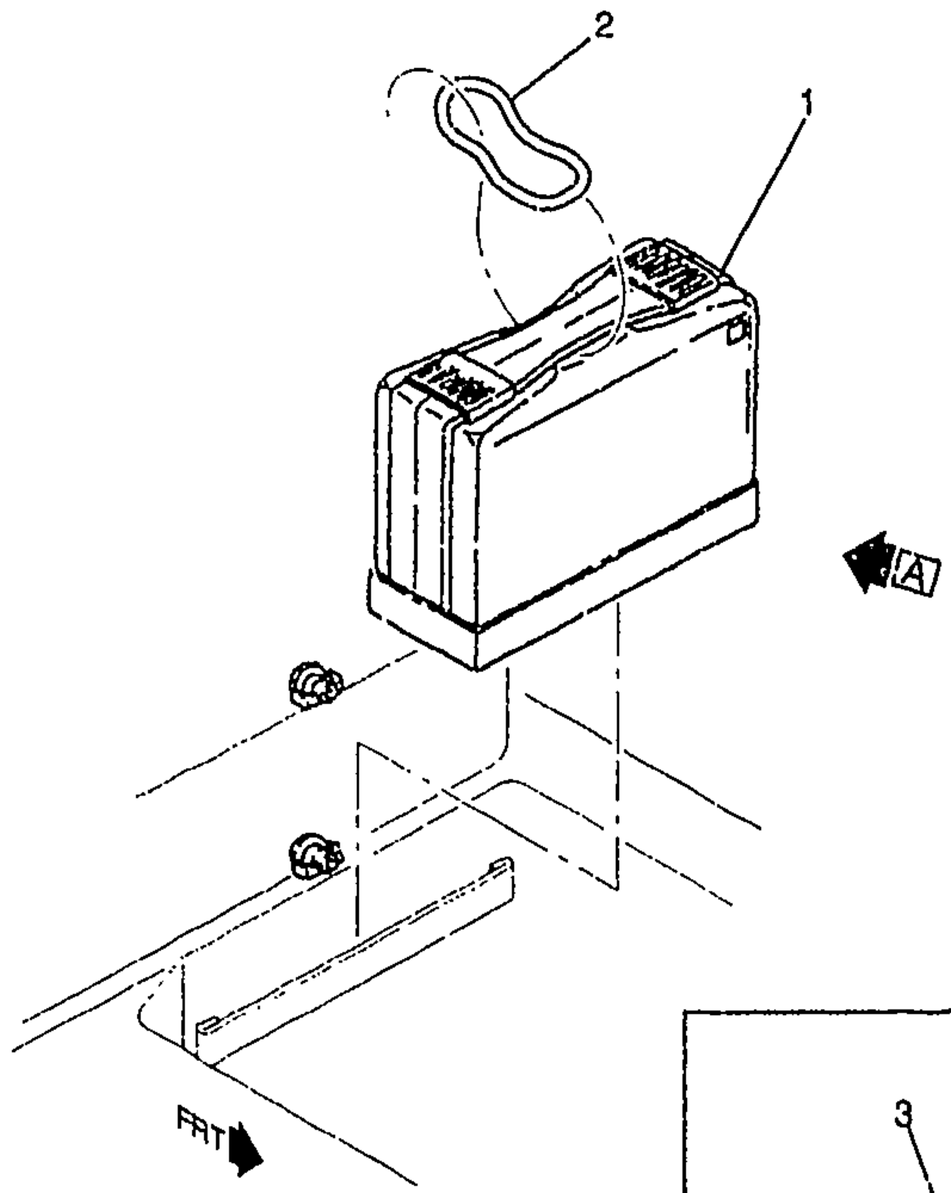

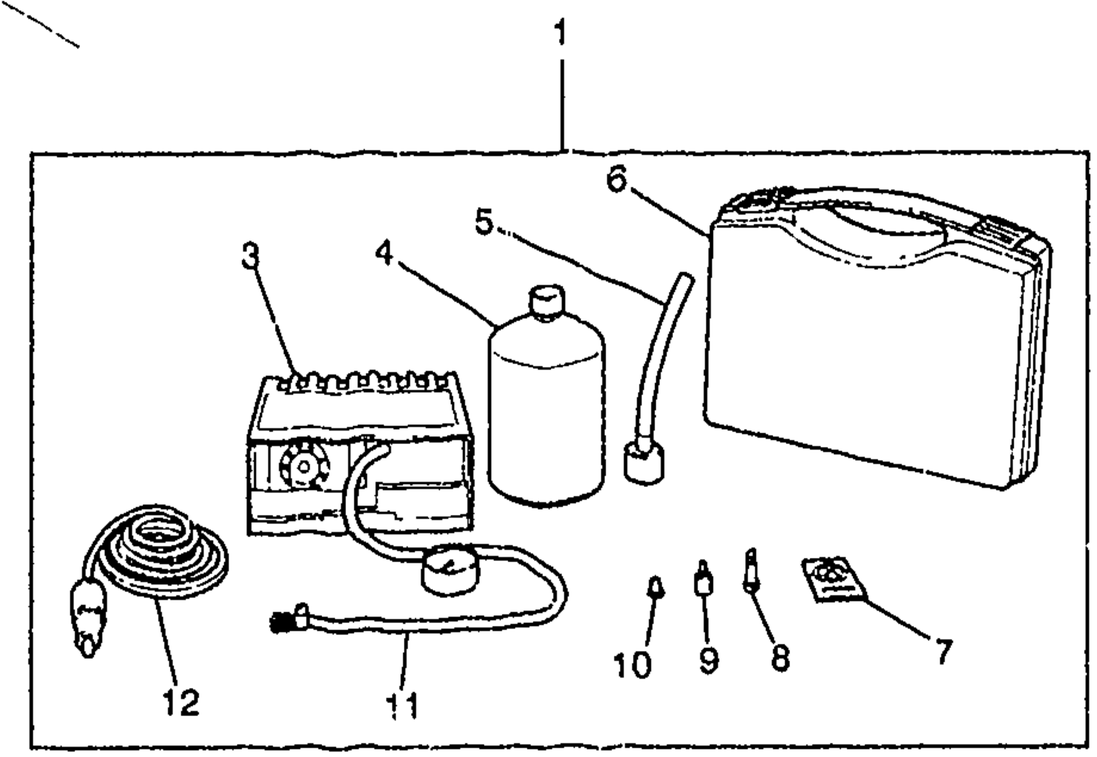

VIEW A

bc

1Y05-017

2001-2002 Y37 ROAD WHEEL INFLATOR KIT

1.	3-D18	5.880	COMPRESSOR, TIRE AIR (W/TIRE SEALER) (INCLS 3-12)	01-02	YY37	1	9593935
	3-D18	5.880	COMPRESSOR, TIRE AIR (INCLS 3-12)	01-02	YY37	1	9593933
2.	3-D18	5.880	STRAP, TIRE INFLR	01-02	Y37	1	10434786
3.	3-D18	5.880	COMPRESSOR, TIRE AIR (PART OF 1)	01-02	YY37	1	88891850
4.		N.S.	SEALER, TIRE RPR (PART OF 1) (*KIT1)				
5.		N.S.	HOSE, TIRE RPR SEALER FIL (PART OF 1) (*KIT1)				

cardiagn.com

6.		N.S.	CASE, TIRE AIR CMPR STOR (PART OF 1)				
7.	3–N24	8.808	LABEL, TIRE MAX SPD CAUTION (PART OF 1) (*KIT1)	01–02	YY37	1	9594076
8.		N.S.	VALVE, TIRE (PART OF 1) (*KIT1)				
9.		N.S.	EXTRACTOR, TIRE VLV (PART OF 1) (*KIT1)				
10.		N.S.	PLUG, TIRE RPR SEALER FIL HOSE (PART OF 1) (*KIT1)				
11.		N.S.	HOSE, TIRE AIR CMPR (PART OF 1)				
12.		N.S.	RECEPTACLE, ACSRY PWR (PART OF 1)				

SERVICE KITS

1.	8.800	SEALER KIT, TIRE RPR (INCLS 4, 5, 7–10)	01–02	YY37	1	9593932

cardiagn.com

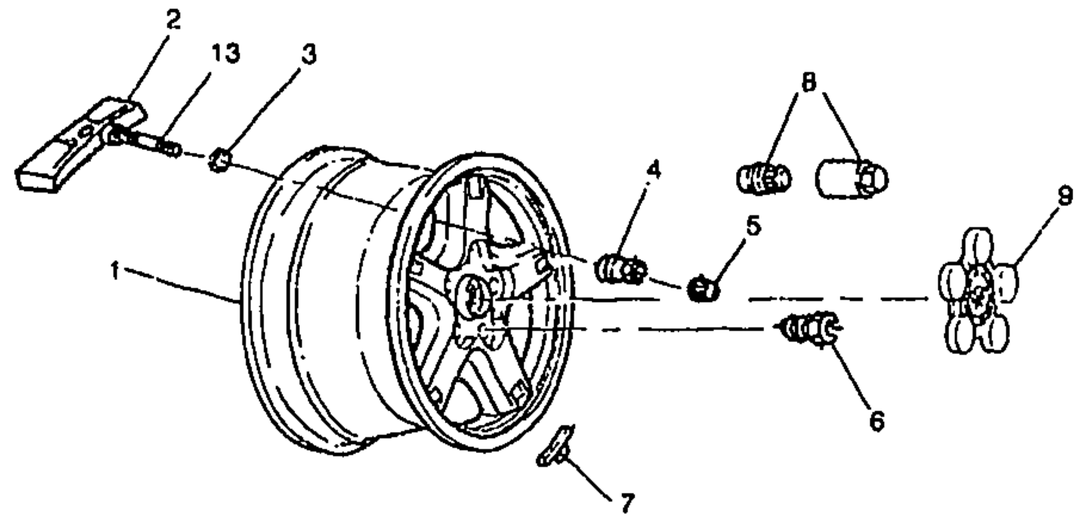

(QD4)

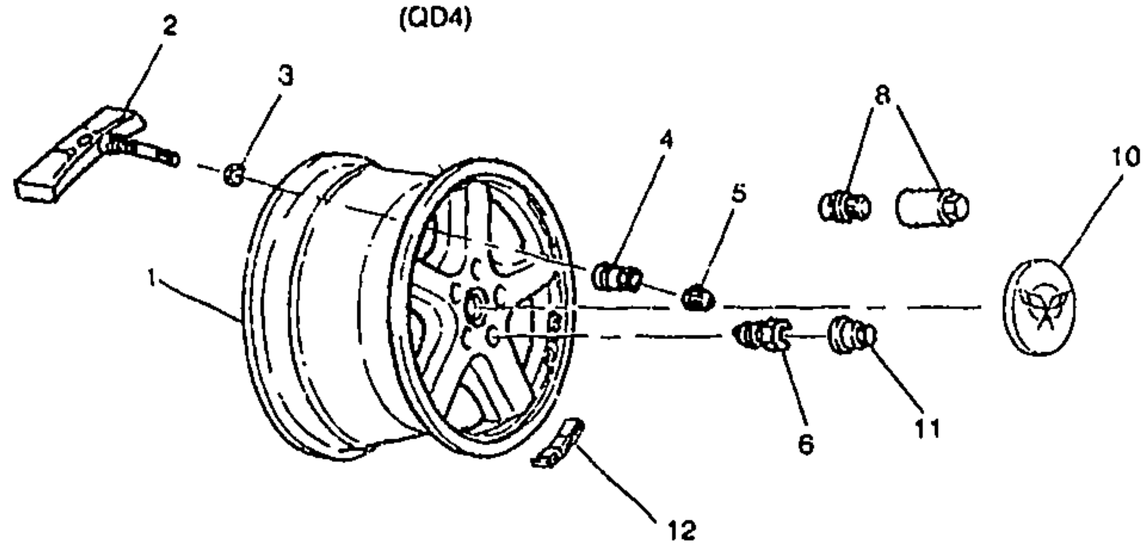

(N73)

1Y05-008

1997 Y WHEELS & WHEEL COVERS

1.	3-D15	5.803	WHEEL, 17X8.5 (ALUMINUM, NON--DIRECTIONAL WHEELS) (SILVER) (17X8.5) (FRT) (CODE: RHH) (ALUM NON-DIRECTIONAL WHLS)	97	Y (QD4)	2	9592413
	3-D15	5.803	WHEEL, 18X9.5 (SILVER) (18X9.5) (RR) (CODE: RHL) (NON-DIRECTIONAL WHLS) ...	97	Y (QD4)	2	9592414
	3-D15	5.803	WHEEL, 17X8.5 (BRONZE) (FRT) (MAGNESIUM)	97	Y (N73) (EXPORT)	2	9592638
	3-D15	5.803	WHEEL, 18X9.5 (BRONZE) (RR) (MAGNESIUM)	97	Y (N73) (EXPORT)	2	9592640
2.	3-D18	5.890	SENSOR, TIRE PRESS IND	97	Y (EXC VD1, VE1)	4	10438853
	3-D18	5.890	SENSOR, TIRE PRESS IND	97	Y (VD1) (EXPORT)	4	10316125
3.	3-D18	5.890	WASHER, TIRE PRESS IND SEN (O-RING SEAL)	97	Y (EXC VD1, VE1)	4	10268438
	3-D18	5.890	WASHER, TIRE PRESS IND SEN (O- RING SEAL)	97	Y (VD1) (EXPORT)	1	10268438
4.	3-D18	5.890	NUT, TIRE PRESS IND SEN (VLV STEM)	97	Y	4	10268439
5.	3-D18	5.890	CAP, TIRE PRESS IND SEN (VLV STEM) (VALVE STEM)	97	Y	4	10268440
6.	3-D17	5.813	NUT, WHL (M12X1.5)	97	Y (QD4)	20	22526184
	3-D17	5.813	NUT, WHL (W/EXT THREADS) (BLACK) (M12X1.5 W/M24X2.0 OTR THD)	97	Y (N73) (EXPORT)	20	10028615

cardiagn.com

7.	3-D16	5.805	WEIGHT, WHL BAL (0.25 OZ)	97	Y	AR	9591669
	3-D16	5.805	WEIGHT, WHL BAL (0.5 OZ) (ALUM WHL)	97	Y	AR	9591582
	3-D16	5.805	WEIGHT, WHL BAL (0.75 OZ) (ALUM WHL)	97	Y	AR	9591583
	3-D16	5.805	WEIGHT, WHL BAL (1.0 OZ) (CODE-AW) (MT ON I/S ONLY) ..	97	Y	AR	9591361
	3-D16	5.805	WEIGHT, WHL BAL (1.25 OZ) (MT ON I/S ONLY)	97	Y	AR	9591362
	3-D16	5.805	WEIGHT, WHL BAL (1.5 OZ) (MT ON I/S ONLY)	97	Y	AR	9591363
	3-D16	5.805	WEIGHT, WHL BAL (1.75 OZ) (MT ON I/S ONLY)	97	Y	AR	9591364
	3-D16	5.805	WEIGHT, WHL BAL (2.0 OZ) (MT ON I/S ONLY)	97	Y	AR	9591365
	3-D16	5.805	WEIGHT, WHL BAL (2.25 OZ) (ALUM WHL) (MT ON I/S ONLY) ..	97	Y	AR	9591366
	3-D16	5.805	WEIGHT, WHL BAL (2.5 OZ) (ALUM WHL) (MT ON I/S ONLY) ..	97	Y	AR	9591367
	3-D16	5.805	WEIGHT, WHL BAL (2.75 OZ) (ALUM WHL)	97	Y	AR	9591368
8.	3-M24	21.340 B	LOCK PKG, WHL (INSTALL .25) (M12 X 1.5 W/EXT THD) (INCLUDES 4 NUTS AND 1 KEY) (5.875)	97	Y	1	12497478
	3-M24	21.340 B	LOCK PKG, WHL (10-PACK OF LOCK PKG 12497478) (5.875) ...	97	Y	1	12497694
		N.S.	WRENCH, SPL SECURITY WHL LK NUT ("REPLACEMENT TO BE HANDLED BETWEEN CUSTOMER & SUPPLIER: AMERICAN ACCES. DIV OF AMCOR")		.....		
9.	3-D18	5.858	CAP, HUB (SILVER) (CODE: TGU) (CORVETTE CTR)	97	Y (QD4)	4	12364359
10.	3-D18	5.858	CAP, HUB (BRONZE) (66.75MM) (CODE: TZR) (CORVETTE CTR CROSS FLAG) (W/O-RING SEAL)	97	Y (N73)	4	9594097
11.	3-D17	5.813	CAP, WHL NUT (GRAY)	97	Y (N73) (EXPORT)	20	14102345
12.	3-D16	5.805	WEIGHT, WHL BAL (3.0 OZ) (SERVICES ALL WEIGHTS) (CUT AS REQUIRED) (MAG)	97	Y (N73) (EXPORT)	AR	9592827
13.	3-D18	5.875	STEM, TIRE VLV (.453 HOLE, 1.25 LONG) (NON-CHROME) ...	97	Y	4	274288

RPO DEFINITIONS
N73 – WHEEL,CUSTOM SPORT
QD4 – WHEEL 17 X 8.5 FRT & 18 X 9.5 RR, ALUM, STYLED
VD1 – PROVISION OPTIONS,EUROPE(EXPORT)
VE1 – PROVISION OPTIONS,JAPAN(EXPORT)

cardiagn.com

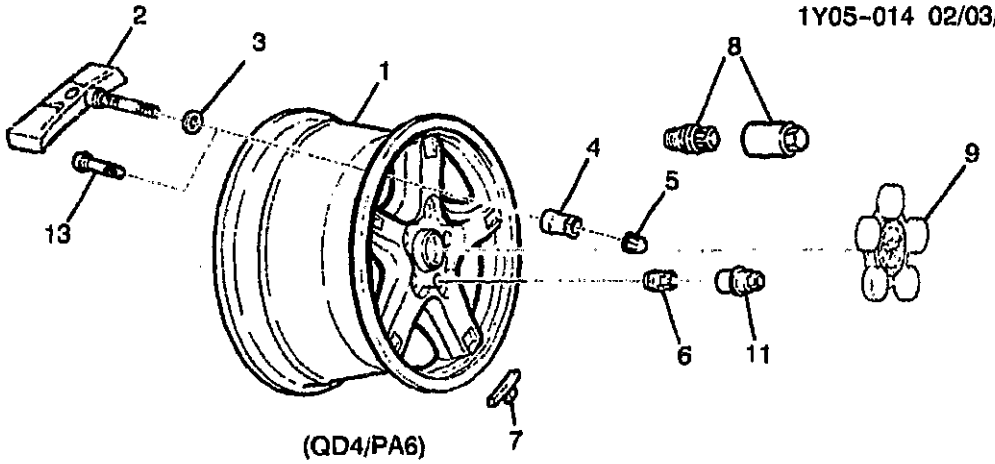

(QD4/PA6)

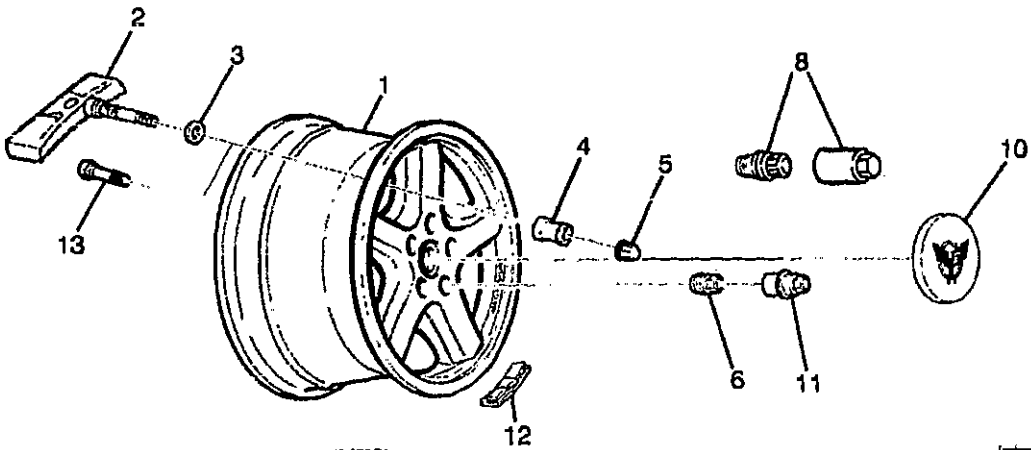

(N73)

as

1Y05-014

1998 Y WHEELS & WHEEL COVERS

1.	3-C15	5.803	**WHEEL**, 17X8.5 (YELLOW)	98 Y	1	9593286
	3-C15	5.803	**WHEEL**, 17X8.5 (ALUMINUM, NON-DIRECTIONAL WHEELS) (SILVER) (17X8.5) (FRT) (CODE: RHH) (ALUM NON-DIRECTIONAL WHLS)	98 Y (QD4)	2	9592413
	3-C15	5.803	**WHEEL**, 18X9.5 (SILVER) (18X9.5) (RR) (CODE: RHL) (NON-DIRECTIONAL WHLS) ...	98 Y (QD4)	2	9592414
	3-C15	5.803	**WHEEL**, 18X9.5 (YELLOW)	98 Y (PA6)	4	9593290
	3-C15	5.803	**WHEEL**, 17X8.5 (BRONZE) (FRT) (MAGNESIUM)	98 Y (N73) (EXPORT)	2	9592638
	3-C15	5.803	**WHEEL**, 18X9.5 (BRONZE) (RR) (MAGNESIUM)	98 Y (N73) (EXPORT)	2	9592840
2.	3-C18	5.890	**SENSOR**, TIRE PRESS IND	98 Y (EXC VD1, VE1)	4	10438853
	3-C18	5.890	**SENSOR**, TIRE PRESS IND	98 Y (VD1) (EXPORT)	4	10422623
3.	3-C18	5.890	**WASHER**, TIRE PRESS IND SEN (O-RING SEAL)	98 Y (EXC VD1, VE1)	4	10268438
	3-C18	5.890	**WASHER**, TIRE PRESS IND SEN (O-RING SEAL)	98 Y (VD1) (EXPORT)	1	10268438

cardiagn.com

							1Y05-014
4.	3-C18	5.890	NUT, TIRE PRESS IND SEN (VLV STEM)	98	Y	4	10268439
5.	3-C18	5.890	CAP, TIRE PRESS IND SEN (VLV STEM) (VALVE STEM)	98	Y	4	10268440
6.	3-C17	5.813	NUT, WHL (M12X1.5)	98	Y (QD4)	20	22526184
	3-C17	5.813	NUT, WHL (M12X1.5)	98	Y (PA6)	20	22526184
	3-C17	5.813	NUT, WHL (W/EXT THREADS) (BLACK) (M12X1.5 W/M24X2.0 OTR THD)	98	Y (N73) (EXPORT)	20	10028615
7.	3-C15	5.805	WEIGHT, WHL BAL (0.25 OZ)	98	Y	AR	9591669
	3-C15	5.805	WEIGHT, WHL BAL (0.5 OZ) (ALUM WHL)	98	Y	AR	9591562
	3-C15	5.805	WEIGHT, WHL BAL (0.75 OZ) (ALUM WHL)	98	Y	AR	9591583
	3-C15	5.805	WEIGHT, WHL BAL (1.0 OZ) (CODE-AW) (MT ON I/S ONLY)	98	Y	AR	9591361
	3-C15	5.805	WEIGHT, WHL BAL (1.25 OZ) (MT ON I/S ONLY)	98	Y	AR	9591362
	3-C15	5.805	WEIGHT, WHL BAL (1.5 OZ) (MT ON I/S ONLY)	98	Y	AR	9591363
	3-C15	5.805	WEIGHT, WHL BAL (1.75 OZ) (MT ON I/S ONLY)	98	Y	AR	9591364
	3-C15	5.805	WEIGHT, WHL BAL (2.0 OZ) (MT ON I/S ONLY)	98	Y	AR	9591365
	3-C15	5.805	WEIGHT, WHL BAL (2.25 OZ) (ALUM WHL) (MT ON I/S ONLY)	98	Y	AR	9591366
	3-C15	5.805	WEIGHT, WHL BAL (2.5 OZ) (ALUM WHL) (MT ON I/S ONLY)	98	Y	AR	9591367
	3-C15	5.805	WEIGHT, WHL BAL (2.75 OZ) (ALUM WHL)	98	Y	AR	9591368
8.	3-C17	5.813	NUT, SPL SECURITY WHL LK	98			
		N.S.	WRENCH, SPL SECURITY WHL LK NUT ("REPLACEMENT TO BE HANDLED BETWEEN CUSTOMER & SUPPLIER: AMERICAN ACCES. DIV OF AMCOR")				
9.	3-C17	5.858	CAP, HUB (SILVER) (CODE: TGU) (CORVETTE CTR)	98	Y (QD4)	4	12364359
10.	3-C17	5.858	CAP, HUB (BRONZE) (66.75MM) (CODE: TZR) (CORVETTE CTR CROSS FLAG) (W/O-RING SEAL)	98	Y (N73)	4	9594097
	3-C17	5.858	CAP, HUB (YELLOW) (CODE: RTA) (CORVETTE LOGO)	98	Y (PA6)	4	9593291
11.	3-C17	5.613	CAP, WHL NUT (GRAY)	98	Y (N73) (EXPORT)	20	14102345
12.	3-C15	5.805	WEIGHT, WHL BAL (3.0 OZ) (SERVICES ALL WEIGHTS) (CUT AS REQUIRED) (MAG)	98	Y (N73) (EXPORT)	AR	9592827
13.	3-C18	5.875	STEM, TIRE VLV (.453 HOLE, 1.25 LONG) (NON-CHROME)	98	Y	4	274288

RPO DEFINITIONS
N73 – WHEEL,CUSTOM SPORT
PA6 – WHEEL,STYLED(PAINTED)
QD4 – WHEEL 17 X 8.5 FRT & 18 X 9.5 RR, ALUM, STYLED
VD1 – PROVISION OPTIONS,EUROPE(EXPORT)
VE1 – PROVISION OPTIONS,JAPAN(EXPORT)

cardiagn.com

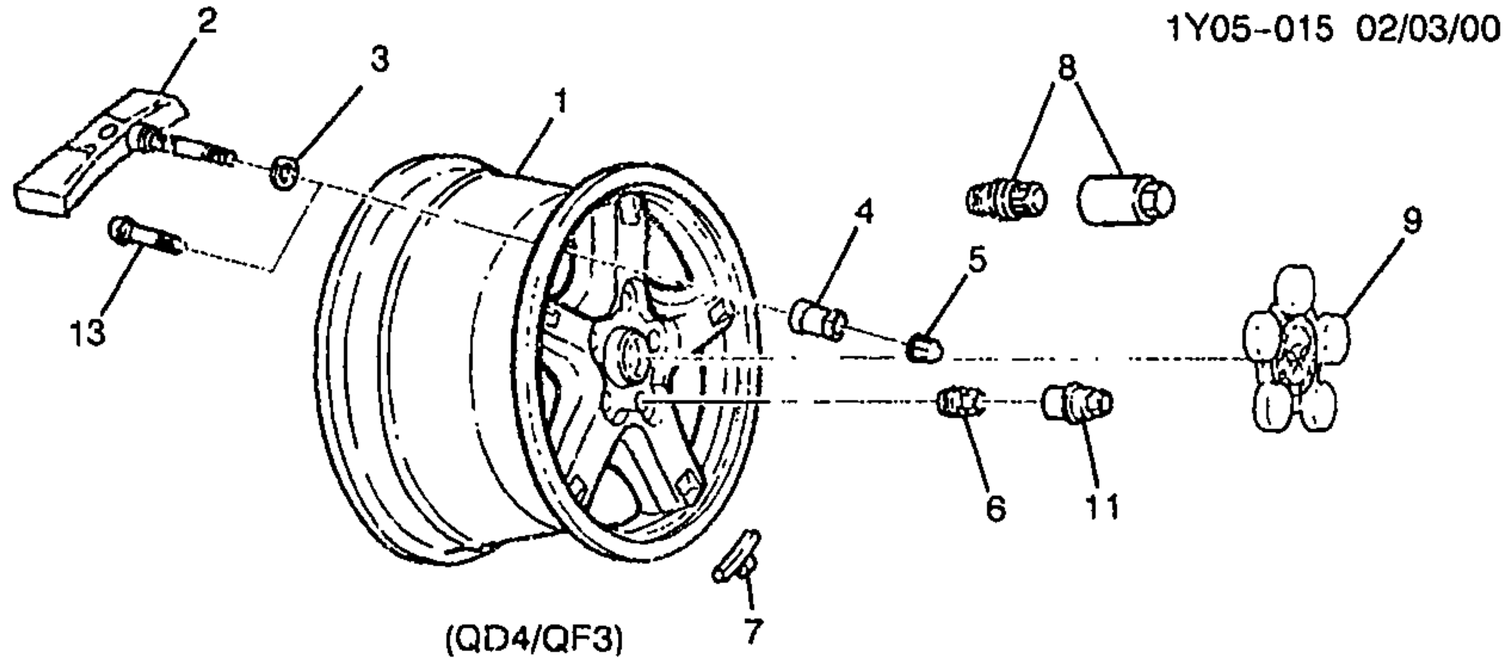

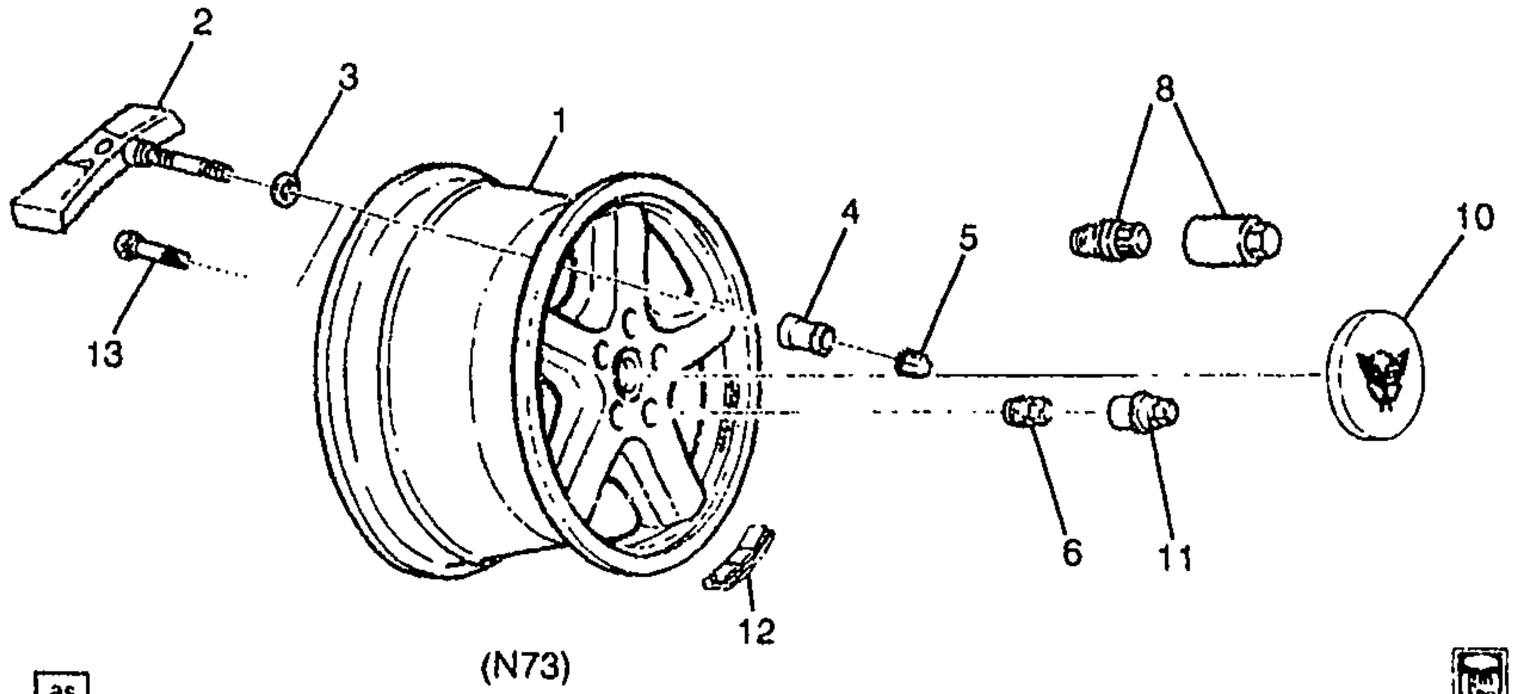

as

1Y05-015

1999 Y WHEELS & WHEEL COVERS

1.	3-D15	5.803	WHEEL, 17X8.5 (BRONZE) (FRT) (MAGNESIUM)	99	Y (N73)	2	9592638
	3-D15	5.803	WHEEL, 17X8.5 (ALUMINUM, NON-DIRECTIONAL WHEELS) (SILVER) (17X8.5) (FRT) (CODE: RHH) (ALUM NON-DIRECTIONAL WHLS) ...	99	Y (QD4)	2	9592413
	3-D15	5.803	WHEEL, 18X9.5 (SILVER) (18X9.5) (RR) (CODE: RHL) (NON-DIRECTIONAL WHLS) ...	99	Y (QD4)	2	9592414
	3-D15	5.803	WHEEL, 18X9.5 (BRONZE) (RR) (MAGNESIUM)	99	Y (N73)	2	9592640
	3-D15	5.803	WHEEL, FRT (SILVER) (17X8.5JA) (CODE: RLA) (ALUM 60MM O/S)	99	Y (QF3)	2	9592613
	3-D15	5.803	WHEEL, RR (SILVER) (18X9.5JA) (CODE: RLB) (ALUM 65MM O/S) .	99	Y (QF3)	2	9592615
2.	3-D18	5.890	SENSOR, TIRE PRESS IND	99	Y (EXC VD1, VE1)	4	10438853
	3-D18	5.890	SENSOR, TIRE PRESS IND	99	Y (VD1) (EXPORT)	4	10316125

cardiagn.com

							1Y05-015
3.	3-D18	5.890	WASHER, TIRE PRESS IND SEN (O-RING SEAL)	99	Y (EXC VD1, VE1)	4	10268438
	3-D18	5.890	WASHER, TIRE PRESS IND SEN (O-RING SEAL)	99	Y (VD1) (EXPORT)	1	10268438
4.	3-D18	5.890	NUT, TIRE PRESS IND SEN (VLV STEM)	99	Y	4	10268439
5.	3-D18	5.890	CAP, TIRE PRESS IND SEN (VLV STEM) (VALVE STEM)	99	Y	4	10268440
6.	3-D17	5.813	NUT, WHL (M12X1.5)	99	Y (QD4)	20	22526184
	3-D17	5.813	NUT, WHL (BLACK) (M12X1.5 W/M24X2.0 OTR THD)	99	Y (N73)	20	10028615
	3-D17	5.813	NUT, WHL (M12X1.5)	99	Y (N66)	20	22526184
7.	3-D16	5.805	WEIGHT, WHL BAL (0.25 OZ)	99	Y	AR	9591669
	3-D16	5.805	WEIGHT, WHL BAL (0.5 OZ) (ALUM WHL)	99	Y	AR	9591582
	3-D16	5.805	WEIGHT, WHL BAL (0.75 OZ) (ALUM WHL)	99	Y	AR	9591583
	3-D16	5.805	WEIGHT, WHL BAL (1.0 OZ) (CODE-AW) (MT ON I/S ONLY) ..	99	Y	AR	9591361
	3-D16	5.805	WEIGHT, WHL BAL (1.25 OZ) (MT ON I/S ONLY)	99	Y	AR	9591362
	3-D16	5.805	WEIGHT, WHL BAL (1.5 OZ) (MT ON I/S ONLY)	99	Y	AR	9591363
	3-D16	5.805	WEIGHT, WHL BAL (1.75 OZ) (MT ON I/S ONLY)	99	Y (N66, QD4)	AR	9591364
	3-D16	5.805	WEIGHT, WHL BAL (2.0 OZ) (MT ON I/S ONLY)	99	Y	AR	9591365
	3-D16	5.805	WEIGHT, WHL BAL (2.25 OZ) (ALUM WHL) (MT ON I/S ONLY) ..	99	Y	AR	9591366
	3-D16	5.805	WEIGHT, WHL BAL (2.5 OZ) (ALUM WHL) (MT ON I/S ONLY) ..	99	Y	AR	9591367
8.	3-M24	21.340 B	LOCK PKG, WHL (INSTALL .25) (M12 X 1.5 W/EXT THD) (INCLUDES 4 NUTS AND 1 KEY) (5.875)	99	Y	1	12497478
	3-M24	21.340 B	LOCK PKG, WHL (10-PACK OF LOCK PKG 12497478) (5.875) ...	99	Y	1	12497694
		N.S.	WRENCH, SPL SECURITY WHL LK NUT ("REPLACEMENT TO BE HANDLED BETWEEN CUSTOMER & SUPPLIER: AMERICAN ACCES. DIV OF AMCOR")		.....		
9.	3-D18	5.858	CAP, HUB (SILVER) (CODE: TGU) (CORVETTE CTR)	99	Y (QD4, QF3)	4	12364359
10.	3-D18	5.858	CAP, HUB (BRONZE) (66.75MM) (CODE: TZR) (CORVETTE CTR CROSS FLAG) (W/O-RING SEAL)	99	Y (N73)	4	9594097
11.	3-D17	5.813	CAP, WHL NUT (GRAY)	99	Y (N73)	20	14102345
12.	3-D16	5.805	WEIGHT, WHL BAL (3.0 OZ) (SERVICES ALL WEIGHTS) (CUT AS REQUIRED) (MAG)	99	Y (N73, QF3)	AR	9592827
13.	3-D18	5.875	STEM, TIRE VLV (.453 HOLE, 1.25 LONG) (NON-CHROME) ...	99	Y	4	274288

RPO DEFINITIONS
N66 - WHEEL,STYLED ALUMINUM

cardiagn.com

N73 – WHEEL,CUSTOM SPORT
QD4 – WHEEL 17 X 8.5 FRT & 18 X 9.5 RR, ALUM, STYLED
QF3 – WHEEL 17 X 8.5, FRT & 18 X 9.5 RR, ALUM, W/SPL OFFSET
VD1 – PROVISION OPTIONS,EUROPE(EXPORT)
VE1 – PROVISION OPTIONS,JAPAN(EXPORT)

cardiagn.com

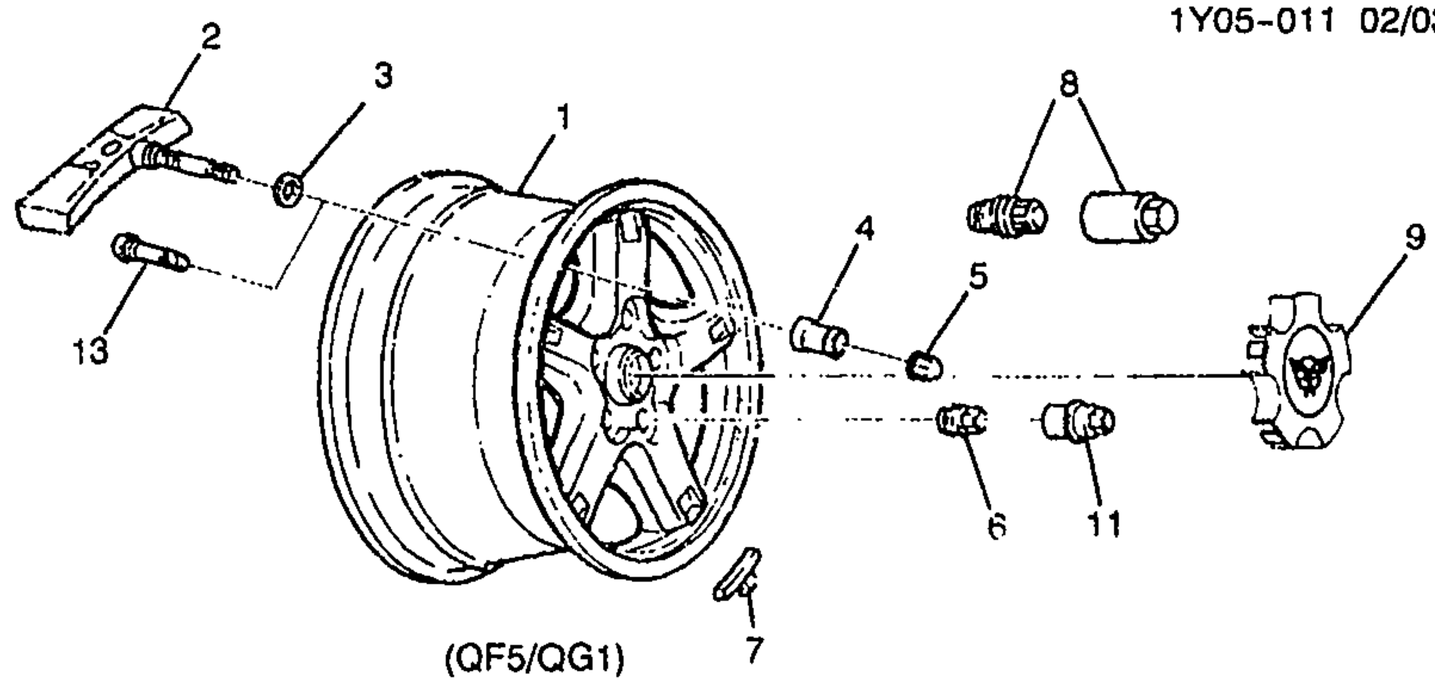

(QF5/QG1)

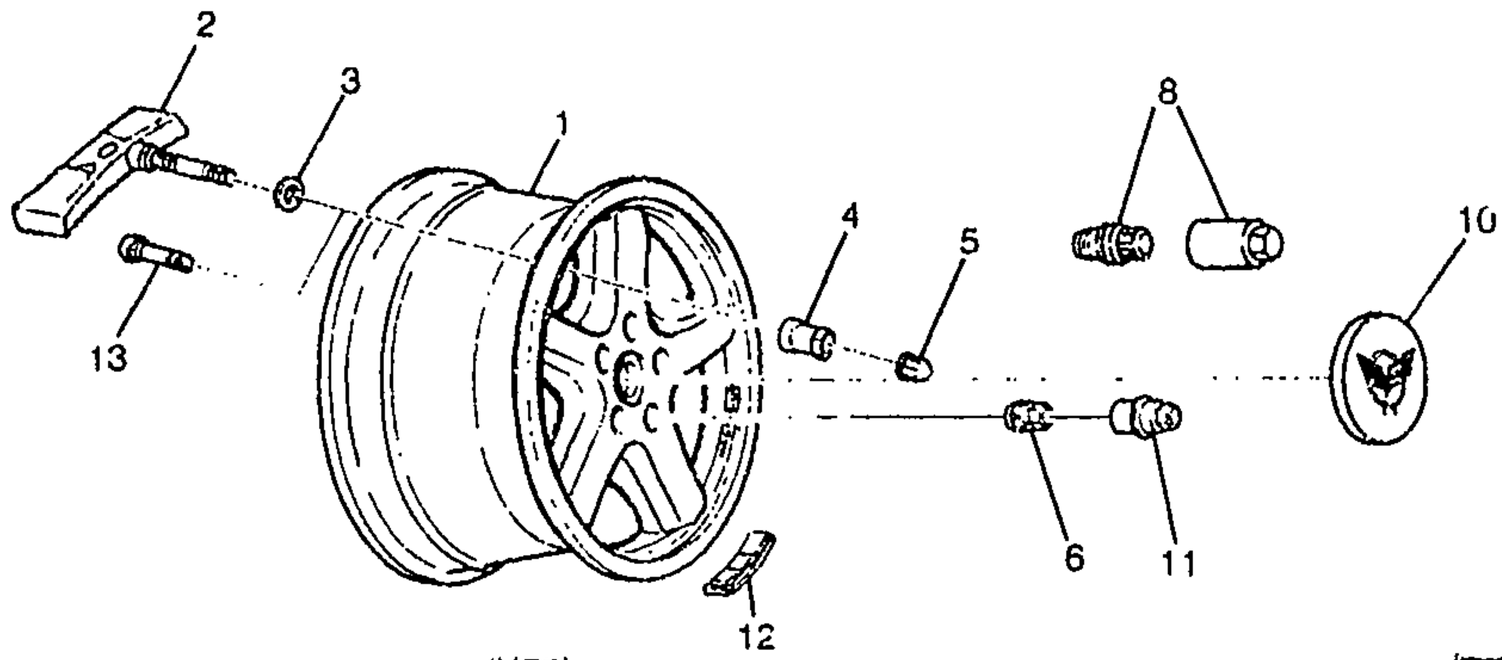

(N73)

BS

1Y05-011

2000 Y WHEELS & WHEEL COVERS

1.	3-D15	5.803	WHEEL, 17X8.5 (BRONZE) (FRT) (MAGNESIUM)	00	Y (N73)	2	9592638
	3-D15	5.803	WHEEL, 18X9.5 (BRONZE) (RR) (MAGNESIUM)	00	Y (N73)	2	9592640
	3-D15	5.803	WHEEL, FRT (SILVER) (17X8.5) (FRT) (CODE: RHH) (ALUM NON-DIRECTIONAL WHLS)) ...	00	Y (QD4)	2	9593798
	3-D15	5.803	WHEEL, FRT (17X8.5)	00	Y (QF5)	2	9594010
	3-D15	5.803	WHEEL, FRT (17X8.5)	00	Y (QG1)	2	9594181
	3-D15	5.803	WHEEL, RR (SILVER) (18X9.5) (RR) (CODE: RHH) (ALUM NON-DIRECTIONAL WHLS)	00	Y (QD4)	2	9593800
	3-D15	5.803	WHEEL, RR (18X9.5)	00	Y (QF5)	2	9594011
	3-D15	5.803	WHEEL, RR (18X9.5)	00	Y (QG1)	2	9594183
2.	3-D18	5.890	SENSOR, TIRE PRESS IND	00	Y (EXC VD1, VE1)	4	10438853
	3-D18	5.890	SENSOR, TIRE PRESS IND	00	Y (VD1) (EXPORT)	4	10316125
3.	3-D18	5.890	WASHER, TIRE PRESS IND SEN (O-RING SEAL)	00	Y (EXC VD1, VE1)	4	10268438
	3-D18	5.890	WASHER, TIRE PRESS IND SEN (O-RING SEAL)	00	Y (VD1) (EXPORT)	1	10268438

cardiagn.com

							1Y05-011
4.	3-D18	5.890	NUT, TIRE PRESS IND SEN (VLV STEM)	00	Y (EXC VE1)	4	10268439
5.	3-D18	5.890	CAP, TIRE PRESS IND SEN (VLV STEM) (VALVE STEM)	00	Y (EXC VE1)	4	10268440
6.	3-D17	5.813	NUT, WHL (BLACK) (M12X1.5 W/M24X2.0 OTR THD)	00	Y	20	10028615
	3-D17	5.813	CAP, WHL NUT (ARGENT)	00	Y	20	9593229
7.	3-D16	5.805	WEIGHT, WHL BAL (0.25 OZ)	00	Y	AR	9591669
	3-D16	5.805	WEIGHT, WHL BAL (0.5 OZ) (ALUM WHL)	00	Y	AR	9591582
	3-D16	5.805	WEIGHT, WHL BAL (0.75 OZ) (ALUM WHL)	00	Y	AR	9591583
	3-D16	5.805	WEIGHT, WHL BAL (1.0 OZ) (CODE-AW) (MT ON I/S ONLY)	00	Y	AR	9591361
	3-D16	5.805	WEIGHT, WHL BAL (1.25 OZ) (MT ON I/S ONLY)	00	Y	AR	9591362
	3-D16	5.805	WEIGHT, WHL BAL (1.5 OZ) (MT ON I/S ONLY)	00	Y	AR	9591363
	3-D16	5.805	WEIGHT, WHL BAL (1.75 OZ) (MT ON I/S ONLY)	00	Y (QF5, QG1)	AR	9591364
	3-D16	5.805	WEIGHT, WHL BAL (2.0 OZ) (MT ON I/S ONLY)	00	Y	AR	9591365
	3-D16	5.805	WEIGHT, WHL BAL (2.25 OZ) (ALUM WHL) (MT ON I/S ONLY)	00	Y	AR	9591366
	3-D16	5.805	WEIGHT, WHL BAL (2.5 OZ) (ALUM WHL) (MT ON I/S ONLY)	00	Y	AR	9591367
8.	3-M24	21.340 B	LOCK PKG, WHL (INSTALL .25) (M12 X 1.5 W/EXT THD) (INCLUDES 4 NUTS AND 1 KEY) (5.875)	00	Y	1	12497478
	3-M24	21.340 B	LOCK PKG, WHL (10-PACK OF LOCK PKG 12497478) (5.875)	00	Y	1	12497694
		N.S.	WRENCH, SPL SECURITY WHL LK NUT ("REPLACEMENT TO BE HANDLED BETWEEN CUSTOMER & SUPPLIER: AMERICAN ACCES. DIV OF AMCOR")				
9.	3-D18	5.858	CAP, HUB (CORVETTE FLAGS) (PAINTED)	00	Y (QG1)	4	9593802
	3-D18	5.858	CAP, HUB (CORVETTE FLAGS) (POLISHED)	00	Y (QF5)	4	9594012
10.	3-D18	5.858	CAP, HUB (BRONZE) (66.75MM) (CODE: TZR) (CORVETTE CTR CROSS FLAG) (W/O-RING SEAL)	00	Y (N73)	4	9594097
11.	3-D17	5.813	CAP, WHL NUT (ARGENT)	00	Y	20	9593229
12.	3-D16	5.805	WEIGHT, WHL BAL (3.0 OZ) (SERVICES ALL WEIGHTS) (CUT AS REQUIRED) (MAG)	00	Y (N73)	AR	9592827
13.	3-D18	5.875	STEM, TIRE VLV (.453 HOLE, 1.25 LONG) (NON-CHROME)	00	Y	4	274288

RPO DEFINITIONS
N73 – WHEEL,CUSTOM SPORT
QD4 – WHEEL 17 X 8.5 FRT & 18 X 9.5 RR, ALUM, STYLED
QF5 – WHEEL 17 X 8.5, FRT & 18 X 9.5 RR, ALUM POLISHED
QG1 – WHEEL 17 X 8.5, FRT & 18 X 9.5 RR, ALUM, PAINTED
VD1 – PROVISION OPTIONS,EUROPE(EXPORT)

cardiagn.com

cardiagn.com

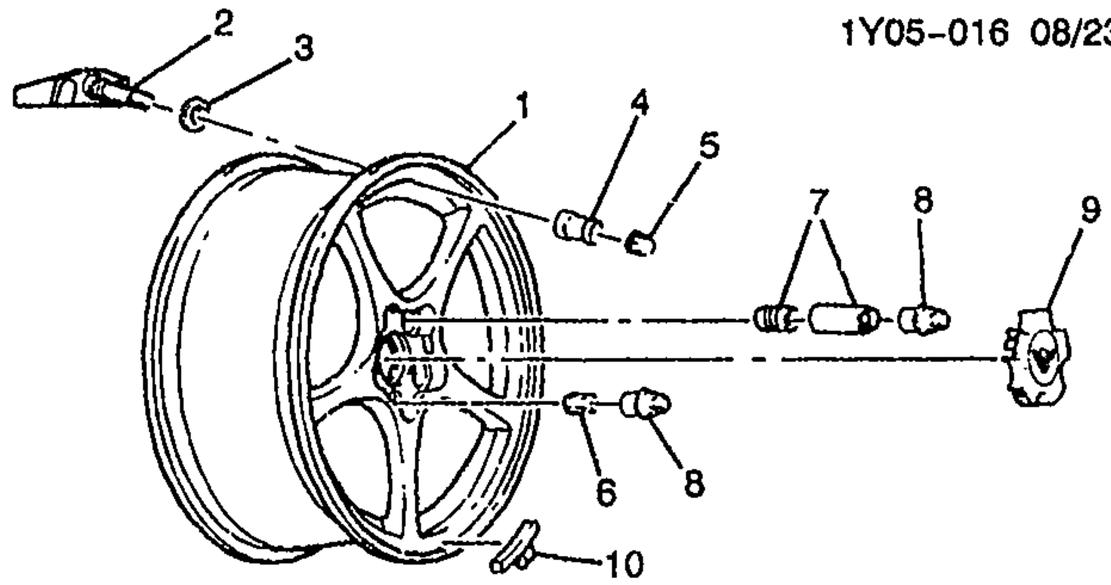

(QF5,QG1)

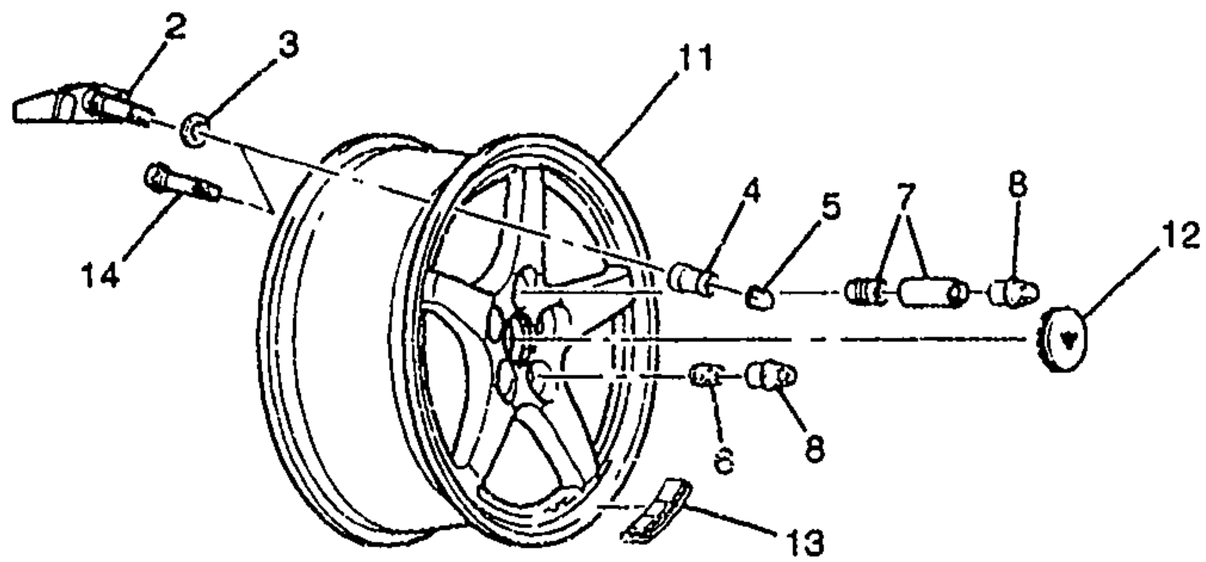

(N73)

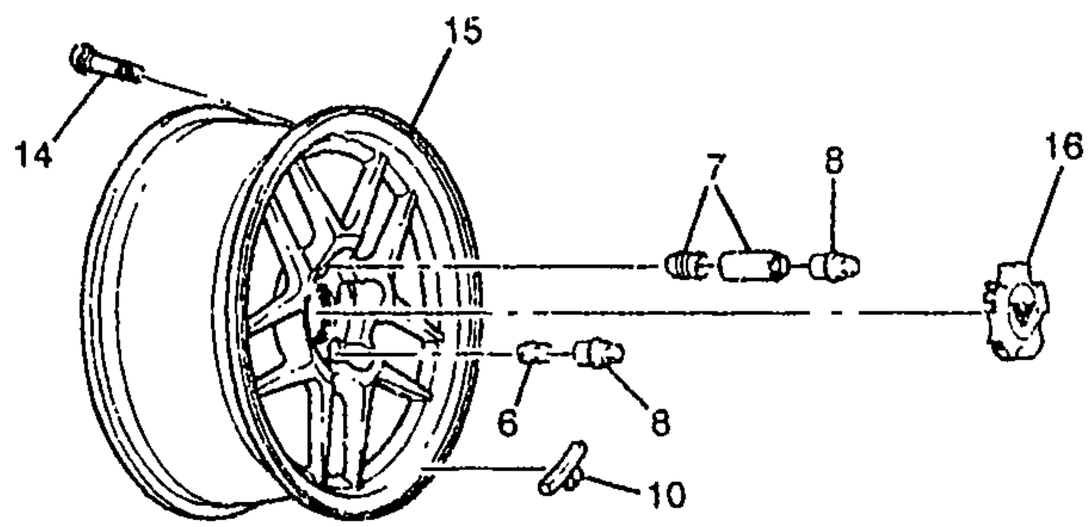

(QE1)

1Y05-016

2001 Y WHEELS & WHEEL COVERS

1.	3-D15	5.803	WHEEL, FRT (17X8.5)	01	Y (QF5)	2	9594010
	3-D15	5.803	WHEEL, FRT (17X8.5)	01	Y (QG1)	2	9594181
	3-D15	5.803	WHEEL, RR (18X9.5)	01	Y (QF5)	2	9594011
	3-D15	5.803	WHEEL, RR (18X9.5)	01	Y (QG1)	2	9594183

cardiagn.com

							1Y05-016
2.	3-D18	5.890	SENSOR, TIRE PRESS IND (INCLS 3, 5) (SENSOR ASM W/O CAP, ALSO SEE P/N 25731358) ..	01	Y07-67 (EXC VD1, VE1)	4	25648293
	3-D18	5.890	SENSOR, TIRE PRESS IND (INCLS 3, 5) (SENSOR ASM W/ ALUMINUM CAP (25731359), ALSO SEE P/N 25648293)	01	Y07-67 (EXC VD1, VE1)	4	25731358
	3-D18	5.890	SENSOR, TIRE PRESS IND (INCLS 3, 5) (SENSOR ASM W/ ALUNINUM CAP (25731359), ALSO SEE P/N 10438854)	01	Y (VD1) (EXPORT)	4	10316125
3.		N.S.	WASHER, TIRE PRESS IND SEN (PART OF 2)		.....		
4.	3-D18	5.890	NUT, TIRE PRESS IND SEN	01	YY07-67 (EXC UE1) ..	4	25708165
5.	3-D18	5.890	CAP, TIRE PRESS IND SEN (PART OF 2) (VALVE STEM) (PLASTIC CAP, SECOND DESIGN SEE 25731359. (MUST USE ALUMINUM CAP ON SENSOR ASM 25731358))	01	Y (1ST DES)	4	10268440
	3-D18	5.890	CAP, TIRE PRESS IND SEN (PART OF 2) (ALUMINUM CAP, 1ST DESIGN SEE 25731359. (MUST USE ALUMINUM CAP ON SENSOR ASM 25731358))	01	Y (EXC VE1) (2ND DES)	4	25731359
6.	3-D17	5.813	NUT, WHL (BLACK) (M12X1.5 W/M24X2.0 OTR THD)	01	Y	20	10028615
7.	3-D17	5.813	NUT, WHL. (BLACK) (M12X1.5 W/M24X2.0 OTR THD)	01	Y	20	10028615
8.	3-D17	5.813	CAP, WHL NUT (ARGENT)	01	Y	20	9593229
9.	3-D18	5.858	CAP, HUB (CORVETTE FLAGS) (PAINTED)	01	Y (QG1)	4	9593802
	3-D18	5.858	CAP, HUB (CORVETTE FLAGS) (POLISHED)	01	Y (QF5)	4	9594012
10.	3-D16	5.805	WEIGHT, WHL BAL (0.25 OZ)	01	Y	AR	9591669
	3-D16	5.805	WEIGHT, WHL BAL (0.5 OZ) (ALUM WHL)	01	Y	AR	9591582
	3-D16	5.805	WEIGHT, WHL BAL (0.75 OZ) (ALUM WHL)	01	Y	AR	9591583
	3-D16	5.805	WEIGHT, WHL BAL (1.0 OZ) (CODE-AW) (MT ON I/S ONLY) ..	01	Y	AR	9591361
	3-D16	5.805	WEIGHT, WHL BAL (1.25 OZ) (MT ON I/S ONLY)	01	Y	AR	9591362
	3-D16	5.805	WEIGHT, WHL BAL (1.5 OZ) (MT ON I/S ONLY)	01	Y	AR	9591363
	3-D16	5.805	WEIGHT, WHL BAL (1.75 OZ) (MT ON I/S ONLY)	01	Y (QF5, QG1)	AR	9591364
	3-D16	5.805	WEIGHT, WHL BAL (2.0 OZ) (MT ON I/S ONLY)	01	Y	AR	9591365
	3-D16	5.805	WEIGHT, WHL BAL (2.25 OZ) (ALUM WHL) (MT ON I/S ONLY) ..	01	Y	AR	9591366
	3-D16	5.805	WEIGHT, WHL BAL (2.5 OZ) (ALUM WHL) (MT ON I/S ONLY) ..	01	Y	AR	9591367
11.	3-D15	5.803	WHEEL, 17X8.5 (BRONZE) (FRT) (MAGNESIUM)	01	Y (N73)	2	9592638
	3-D15	5.803	WHEEL, 18X9.5 (BRONZE) (RR) (MAGNESIUM)	01	Y (N73)	2	9592640

cardiagn.com

						1Y05–016	
12.	3–D18	5.858	CAP, HUB (BRONZE) (66.75MM) (CODE: TZR) (CORVETTE CTR CROSS FLAG) (W/O–RING SEAL)	01	Y (N73)	4	9594097
13.	3–D16	5.805	WEIGHT, WHL BAL (3.0 OZ) (SERVICES ALL WEIGHTS) (CUT AS REQUIRED) (MAG)	01	Y (N73)	AR	9592827
14.	3–D18	5.875	STEM, TIRE VLV (.453 HOLE, 1.25 LONG) (NON–CHROME) ...	01	Y	4	274288
15.	3–D15	5.803	WHEEL, FRT (17X9.5)	01	Y (QE1)	2	9593804
	3–D15	5.803	WHEEL, RR (18X10.5)	01	Y (QE1)	2	9593806
16.	3–D18	5.858	CAP, HUB (GRAY)	01	Y (QE1)	4	9594325

RPO DEFINITIONS
N73 – WHEEL,CUSTOM SPORT 16X7
QE1 – WHEEL 17 X 9.5 FRT & 18 X 10.5 RR, ALUMINUM, STYLED
QF5 – WHEEL 17 X 8.5, FRT & 18 X 9.5 RR, ALUM POLISHED
QG1 – WHEEL 17 X 8.5, FRT & 18 X 9.5 RR, ALUM, PAINTED
UE1 – COMMUNICATION SYSTEM VEHICLE, G.P.S. 1
VD1 – PROVISION OPTIONS,EUROPE(EXPORT)
VE1 – PROVISION OPTIONS,JAPAN(EXPORT)

cardiagn.com

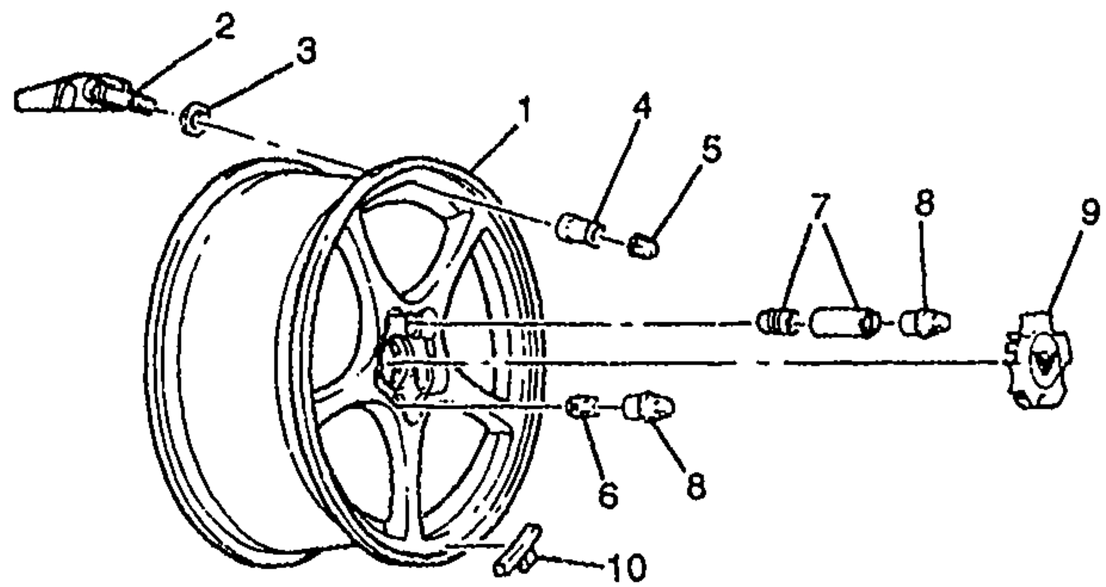

(QF5,QG1)

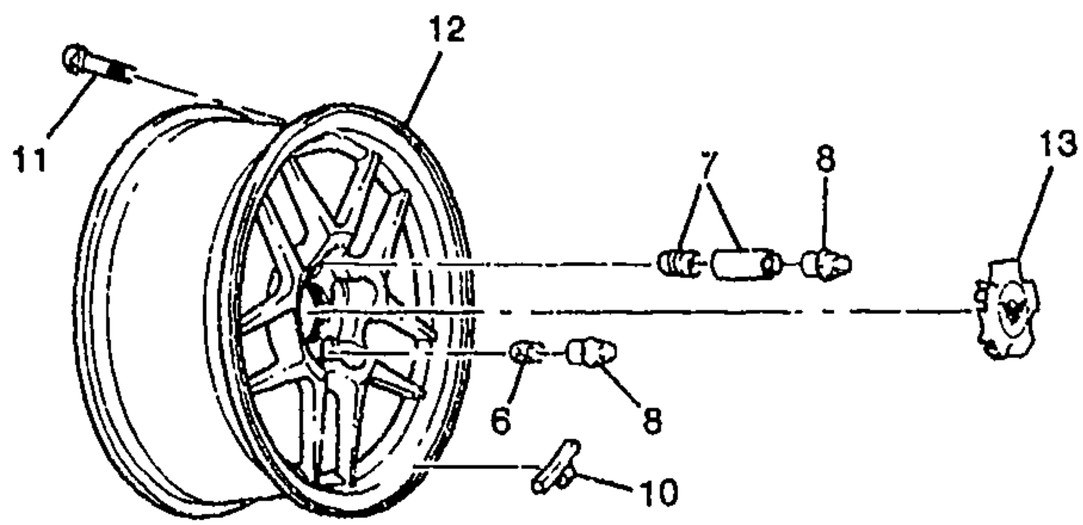

(QE1)

bc

1Y05-019

2002 Y WHEELS & WHEEL COVERS

1.	3-D15	5.803	WHEEL, FRT (17X8.5)	02	Y (QF5)	2	9594010
	3-D15	5.803	WHEEL, FRT (17X8.5)	02	Y (QG1)	2	9594181
	3-D15	5.803	WHEEL, FRT (17X9.5)	02	Y (P12)	2	9593804
	3-D15	5.803	WHEEL, RR (18X9.5)	02	Y (QF5)	2	9594011
	3-D15	5.803	WHEEL, RR (18X9.5)	02	Y (QG1)	2	9594183
	3-D15	5.803	WHEEL, RR (18X10.5)	02	Y (P12)	2	9593806
2.	3-D18	5.890	SENSOR, TIRE PRESS IND (INCLS 3, 5) (SENSOR ASM W/O CAP, ALSO SEE P/N 25731358) ..	02	Y07-67 (EXC VD1, VE1)	4	25648293
	3-D18	5.890	SENSOR, TIRE PRESS IND (INCLS 3, 5)	02	Y07-67 (EXC VD1, VE1)	4	25731358
	3-D18	5.890	SENSOR, TIRE PRESS IND (INCLS 3, 5) (SENSOR ASM W/ ALUNINUM CAP (25731359), ALSO SEE P/N 10438854)	02	Y (VD1) (EXPORT)	4	10316125
3.		N.S.	WASHER, TIRE PRESS IND SEN (PART OF 2)		... .		
4.	3-D18	5.890	NUT, TIRE PRESS IND SEN	02	YY07-67 (EXC UE1) ..	4	25708165

cardiagn.com

							1Y05-019
5.		N.S.	CAP, TIRE PRESS IND SEN (PART OF 2)				
6.	3-D17	5.813	NUT, WHL (BLACK) (M12X1.5 W/M24X2.0 OTR THD)	02	Y	20	10028615
7.	3-D17	5.813	NUT, WHL (BLACK) (M12X1.5 W/M24X2.0 OTR THD)	02	Y	20	10028615
8.	3-D17	5.813	CAP, WHL NUT (ARGENT)	02	Y	20	9593229
9.	3-D18	5.858	CAP, HUB (CORVETTE FLAGS) (PAINTED)	02	Y (QG1)	4	9593802
	3-D18	5.858	CAP, HUB (CORVETTE FLAGS) (POLISHED)	02	Y (QF5)	4	9594012
	3-D18	5.858	CAP, HUB (GRAY)	02	Y (P12)	4	9594325
10.	3-D16	5.805	WEIGHT, WHL BAL (0.25 OZ)	02	Y	AR	9591669
	3-D16	5.805	WEIGHT, WHL BAL (0.5 OZ) (ALUM WHL)	02	Y	AR	9591582
	3-D16	5.805	WEIGHT, WHL BAL (0.75 OZ) (ALUM WHL)	02	Y	AR	9591583
	3-D16	5.805	WEIGHT, WHL BAL (1.0 OZ) (CODE-AW) (MT ON I/S ONLY)	02	Y	AR	9591361
	3-D16	5.805	WEIGHT, WHL BAL (1.25 OZ) (MT ON I/S ONLY)	02	Y	AR	9591362
	3-D16	5.805	WEIGHT, WHL BAL (1.5 OZ) (MT ON I/S ONLY)	02	Y	AR	9591363
	3-D16	5.805	WEIGHT, WHL BAL (1.75 OZ) (MT ON I/S ONLY)	02	Y (QF5, QG1)	AR	9591364
	3-D16	5.805	WEIGHT, WHL BAL (2.0 OZ) (MT ON I/S ONLY)	02	Y	AR	9591365
	3-D16	5.805	WEIGHT, WHL BAL (2.25 OZ) (ALUM WHL) (MT ON I/S ONLY)	02	Y	AR	9591366
	3-D16	5.805	WEIGHT, WHL BAL (2.5 OZ) (ALUM WHL) (MT ON I/S ONLY)	02	Y	AR	9591367
11	3-D18	5.875	STEM, TIRE VLV (.453 HOLE, 1.25 LONG) (NON-CHROME)	02	Y	4	274288
12.	3-D15	5.803	WHEEL, FRT (17X9.5)	02	Y (QE1)	2	9593804
	3-D15	5.803	WHEEL, FRT (17X9.5)	02	Y (P12)	2	9593804
	3-D15	5.803	WHEEL, RR (18X10.5)	02	Y (QE1)	2	9593806
	3-D15	5.803	WHEEL, RR (18X10.5)	02	Y (P12)	2	9593806
13.	3-D18	5.858	CAP, HUB (GRAY)	02	Y (P12)	4	9594325

RPO DEFINITIONS

P12 – WHEEL, 17 X 9.5 FRT & 18 X 10.5 REAR, CAST ALUMINUM
QE1 – WHEEL 17 X 9.5 FRT & 18 X 10.5 RR, ALUMINUM, STYLED
QF5 – WHEEL 17 X 8.5 FRT & 18 X 9.5 RR, ALUM POLISHED
QG1 – WHEEL 17 X 8.5, FRT & 18 X 9.5 RR, ALUM, PAINTED
UE1 – COMMUNICATION SYSTEM VEHICLE, G.P.S. 1
VD1 – PROVISION OPTIONS,EUROPE(EXPORT)
VE1 – PROVISION OPTIONS,JAPAN(EXPORT)

cardiagn.com

4.003 TRANSMISSION, Automatic

NOTE: REFER TO TRANSMISSION IDENTIFICATION PAGES FOR CODE LOCATION & OPTION IDENT.

NOTE: TRANSMISSION 4L60E = M30

NOTE: ALL NEW AND REMANUFACTURED HYDRA–MATIC AUTOMATIC TRANSMISSIONS INCLUDE TORQUE CONVERTER.

97	Y 4–SPD A/TRANS (M30) ...	24208554	1	N.L.	TRANSMISSION, AUTO (GOODWRENCH REMAN) (CODE 7YDD)	3–E15
97	Y 5.7G (LS1), 4–SPD A/TRANS (M30), 2.73R (GU2), 3.15R (G90)	24219272	1	N.L.	TRANSMISSION, AUTO (A/C DELCO REMAN) (CODE 7YDD) (AC–DELCO #24219272) (4L60E)	
98	Y 5.7G (LS1), 4–SPD A/TRANS (M30)	24210674	1	N.L.	TRANSMISSION, AUTO (GOODWRENCH REMAN) (CODE 8YDD)	3–E15
99	Y 5.7G (LS1), 4–SPD A/TRANS (M30)	24212632	1	N.L.	TRANSMISSION, AUTO (GOODWRENCH REMAN) (CODE 9YDD)	3–E15
00	Y 5.7G (LS1), 4–SPD A/TRANS (M30), 2.73R (GU2), 3.15R (G90)	24216090	1	N.L.	TRANSMISSION, AUTO (GOODWRENCH REMAN) (CODE 0YDD)	3–E15
01	Y 5.7G (LS1), 4–SPD A/TRANS (M30)	24219086	1	N.L.	TRANSMISSION, AUTO (GOODWRENCH REMAN) (CODE 1YDD)	3–E15
02	Y 4–SPD A/TRANS (M30) ...	24221293	1		TRANSMISSION, AUTO (GOODWRENCH REMAN) (CODE 2YDD)	3–E15

4.004 CONTROL, Transmission Shift

97	Y 4–SPD A/TRANS (M30) ...	12562753	1	192.73	CONTROL, A/TRNS	3–F21,11
98	Y 4–SPD A/TRANS (M30), (EXC INDY PACE CAR (Z4Z)	12562753	1	192.73	CONTROL, A/TRNS	3–F21,11
98	Y67 4–SPD A/TRANS (M30), INDY PACE CAR (Z4Z)	12564519	1	191.05	CONTROL, A/TRNS	3–F21,11
99	Y 4–SPD A/TRANS (M30) ...	12562753	1	192.73	CONTROL, A/TRNS	3–F21,11
00–02	Y07–67 4–SPD A/TRANS (M30)	12562753	1	192.73	CONTROL, A/TRNS	3–F21,11
00	Y37 4–SPD A/TRANS (M30) .	12562753	1	192.73	CONTROL, A/TRNS (EXC BLK CLOTH)	3–F21,11
00	Y37 4–SPD A/TRANS (M30) .	12562754	1	181.34	CONTROL, A/TRNS (W/BLK CLOTH)	3–F21,11

4.005 GASKET KIT – RING KIT, Transmission Overhaul

97–01	Y 4–SPD A/TRANS (M30) ...	24201803	1	201.00	GASKET KIT, A/TRNS SERV (W/O PLATES OR PISTONS) (AC–DELCO #24201803)	3–E6,2
02	Y 4–SPD A/TRANS (M30) ...	24221347	1	201.00	GASKET KIT, A/TRNS SERV (AC–DELCO #24221347)	3–E15,1
97–02	Y 4–SPD A/TRANS (M30) ...	8642910	1	27.75	RING KIT, RFT (AC–DELCO #8642910)	3–E6,4

4.006 KNOB – RETAINER, Transmission Control Lever

97	Y 4–SPD A/TRANS (M30) ...	12559930	1	50.49	KNOB, A/TRNS CONT LVR	3–F21,13
98	Y 4–SPD A/TRANS (M30), (EXC INDY PACE CAR (Z4Z)	12559930	1	50.49	KNOB, A/TRNS CONT LVR	3–F21,13
98	Y67 4–SPD A/TRANS (M30), INDY PACE CAR (Z4Z)	12560118	1	62.11	KNOB, A/TRNS CONT LVR	3–F21,13

cardiagn.com

4.006 KNOB – RETAINER, Transmission Control Lever (Con't)

99–02	Y 4–SPD A/TRANS (M30) ...	12559930	1	50.49	KNOB, A/TRNS CONT LVR	3–F21,13
97–02	Y 4–SPD A/TRANS (M30) ...	10028352	1	*.91	RETAINER, A/TRNS CONT LVR HDL	3–F21,14

4.010 BOLT, Transmission Shift Control Lever

99–00	Y T&T WHL (N37)	26020231	3	6.25	BOLT, TRANS CONT LVR BOWL PLT (GRAY) (M6X1.0X14.0)	4–E20,39
01–02	Y07–67 6–SPD M/TRANS (MM6), T&T WHL (N37)	26020231	3	6.25	BOLT, TRANS CONT LVR BOWL PLT (GRAY) (M6X1.0X14.0)	4–E20,39
01–02	Y07–67 4–SPD A/TRANS (M30), T&T WHL (N37)	26020231	3	6.25	BOLT, TRANS CONT LVR BOWL PLT (GRAY) (M6X1.0X14.0)	4–E20,39

4.045 LEVER, Transmission Control

97–02	Y 4–SPD A/TRANS (M30) ...	12551458	1	5.01	LEVER, A/TRNS RANGE SEL	3–F21,2

4.047 BRACKET – CABLE – RETAINER, Transmission Shift Control Cable

97–02	Y 4–SPD A/TRANS (M30) ...	10277347	1	4.55	BRACKET, A/TRNS RANGE SEL LVR CBL (TO FRONT)	6–D2,6
97–02	Y 4–SPD A/TRANS (M30) ...	12551457	1	4.55	BRACKET, A/TRNS RANGE SEL LVR CBL (TO REAR)	3–F21,8
97–00	Y 4–SPD A/TRANS (M30) ...	10313840	1		CABLE, A/TRNS PK LK	3–F21,15
01–02	Y 4–SPD A/TRANS (M30) ...	10313840	1		CABLE, A/TRNS PK LK	3–F21,15
97–02	Y 4–SPD A/TRANS (M30) ...	12561688	1	66.25	CABLE, A/TRNS RANGE SEL LVR (AC–DELCO #12561688)	3–F21,6
97–01	Y 4–SPD A/TRANS (M30) ...	10217245	2	4.55	RETAINER, A/TRNS RANGE SEL LVR CBL	3–F21,5
01–02	Y07–67 6–WAY PWR P/SEAT ADJR (AG2), RECL FRT BKT ST, LUXURY (AQ9), IL3	22654286	1	4.55	RETAINER, A/TRNS RANGE SEL LVR CBL (AT FRT OF DASH) ..	3–F21,5
02	Y 4–SPD A/TRANS (M30) ...	10217245	2	4.55	RETAINER, A/TRNS RANGE SEL LVR CBL (USED ON TRANS END & SHIFTER END)	3–F21,5

4.053 CONNECTOR – SOLENOID, Transmission Shift Brake Interlock

97–02	Y	12085208	1	29.34	CONNECTOR, SOL–A/TRNS SHFT LK CONT (BLACK) (4–WAY F W/LEADS) (02.535) (AC–DELCO #PT1232)	
98–02	Y	15305925	1	32.91	CONNECTOR, SOL–A/TRNS SHFT LK CONT (NATURAL) (4–WAY F) (W/LEADS) (04.054) (AC–DELCO #PT1184)	
02	YY67 4–SPD A/TRANS (M30), A/C FRT AUTO/AUX CONT (CJ2), T&T WHL (N37), (EXC TAIL & S/LP (T89) (EXPORT)	12085208	1	29.34	CONNECTOR, SOL–A/TRNS SHFT LK CONT (BLACK) (4–WAY F W/LEADS) (02.535) (AC–DELCO #PT1232)	
97–02	Y	15306359	1	18.97	CONNECTOR, SW–BRK TRANS SHFT INTLK (W/LEADS) (02.485) (AC–DELCO #PT1411)	
02	YY67 4–SPD A/TRANS (M30), A/C FRT AUTO/AUX CONT (CJ2), T&T WHL (N37), (EXC TAIL & S/LP (T89) (EXPORT)	15306359	1	18.97	CONNECTOR, SW–BRK TRANS SHFT INTLK (W/LEADS) (02.485) (AC–DELCO #PT1411)	
97–00	Y 4–SPD A/TRANS (M30) ...	12534774	1	26.75	SOLENOID, A/TRNS SHFT LK CONT	

cardiagn.com

4.054 CONNECTOR – SWITCH, Transmission Safety Start/Warning

97–02	Y	15305887	1	79.56	CONNECTOR, SW–PARK/NEU POSN (GRAY) (7–WAY F) (W/LEADS) (AC–DELCO #PT1031)	
02	Y 4–SPD A/TRANS (M30)	15305925	1	32.91	CONNECTOR, SW–PARK/NEU POSN (NATURAL) (4–WAY F) (W/LEADS) (AC–DELCO #PT1184)	
97–02	Y 4–SPD A/TRANS (M30)	12450016	1	47.60	SWITCH, PARK/NEU POSN & B/U LP (TRANS MOUNTED) (AC–DELCO #D2285A)	3–F21,1

4.057 CONNECTOR, Transmission Control

97	Y 4–SPD A/TRANS (M30)	12146094	1	.81	CONNECTOR, SOL–3–2 DNSHFT VLV (GRAY) (2–WAY F) (W/O LEADS)	

4.081 DAMPENER – MOUNT, Transmission Mounting

97–02	Y	12564737	1	26.00	DAMPENER, TRANSAXLE VIB	3–J13,17
97–02	Y 4–SPD A/TRANS (M30)	22178940	1	89.50	MOUNT, TRANS	3–E4,2

4.083 ADAPTER – BOLT – BRACKET, Transmission Mounting Support

97–02	Y 4–SPD A/TRANS (M30)	12458098	1	48.00	ADAPTER, TRANS	3–J4,12
97–02	Y 4–SPD A/TRANS (M30)	12458099	2	3.33	BOLT, TRANS ADAP (POA CARRIER) (M6X13)	2–L12,178
97–02	Y 4–SPD A/TRANS (M30)	10283879	1	24.00	BRACKET, TRANS MT	3–E4,7

4.085 BOLT – NUT – STUD, Transmission Mount and Support

97–02	Y 4–SPD A/TRANS (M30)	11516862	4	3.33	BOLT, TRANS (AUTO TRANSAXLE TO DRIVELINE SUPPORT) (HFH DOME HD M10X1.5X40 9, 8 7114M 30, 80D HDR PT) (08.900)	3–J21,37
97–02	Y 4–SPD A/TRANS (M30)	10250686	2	3.33	NUT, TRANS MT (BOTTOM) (M10X1.5) (PREV TORQUE LRG FLANGED) (07.242)	3–E4,4
97–02	Y 4–SPD A/TRANS (M30)	12458100	1	3.33	STUD, TRANS (M10X8)	3–J4,11
97–02	Y 4–SPD A/TRANS (M30)	12553527	3	4.55	STUD, TRANSAXLE (8 O'CLOCK, 10 O'CLOCK, 1 O'CLOCK POSNS)	3–F21,7

4.103 CASE KIT, Transmission Case

97–02	Y 4–SPD A/TRANS (M30)	24211242	1	735.00	CASE KIT, A/TRNS (AC–DELCO #24211242)	3–E15,10

4.104 CLIP – HOSE – PIPE – PLUG, Transmission Case

97–98	Y 4–SPD A/TRANS (M30)	12557512	1	3.33	CLIP, TRANS VENT HOSE	
97–02	Y 4–SPD A/TRANS (M30)	12563141	1	7.30	HOSE, TRANS VENT (W/CHK VLV)	
97–02	Y 4–SPD A/TRANS (M30)	24202440	1	4.55	PIPE, A/TRNS VENT	3–E15,9
97–02	Y 4–SPD A/TRANS (M30)	24205899	1	4.53	PLUG, T/CV HSG ACC HOLE (28MM W/3 TANGS) (SMALL CVR) (AC–DELCO #24205899)	3–E15,97

4.105 COVER – ORIFICE, Transmission Case

97–98	Y 5.7G (LS1)	12562042	RH	4.55	COVER, TRANS (AC–DELCO #12562042)	1–J2,460
97–02	Y 5.7G (LS1)	12565649	LH	4.55	COVER, TRANS (AC–DELCO #12565649)	1–J2,458

cardiagn.com

4.105 COVER – ORIFICE, Transmission Case (Con't)

99–02	Y 5.7G (LS1)	12562042	RH	4.55	COVER, TRANS (AC–DELCO #12562042)	1–J2,460
01–02	Y 5.7S (LS6)	12562042	RH	4.55	COVER, TRANS (AC–DELCO #12562042)	1–J2,460
01–02	Y 5.7S (LS6)	12565649	LH	4.55	COVER, TRANS (AC–DELCO #12565649)	1–J2,458
97–02	Y 4–SPD A/TRANS (M30) ...	8628864	1	4.53	ORIFICE, FWD CLU FEED (6.4MM DIA) (NO DIMPLE) (04.104) (AC–DELCO #8628864)	3–E15,11
97–02	Y 4–SPD A/TRANS (M30) ...	8628864	2	4.53	ORIFICE, 3RD ACCUM BL (6.4MM DIA) (NO DIMPLE) (04.104) (AC–DELCO #8628864)	3–E15,11

4.115 BOLT – BUSHING – CONNECTOR – CONVERTER – HOUSING, Transmission Converter

97	Y 4–SPD A/TRANS (M30) ...	20616587	3	*1.87	BOLT, STAT SHF (M6X1X19.0) (11.561) (AC–DELCO #20616587)	
97–02	Y 4–SPD A/TRANS (M30) ...	24203265	8	4.55	BOLT, T/CV HSG (M10X1.5X45, 10 OD, TORX PLUS HD) (AC–DELCO #24203265)	3–E15,94
97–02	Y 4–SPD A/TRANS (M30) ...	1261968	3	*1.87	BOLT, TRANS T/CV (M10X1.5X15 12.5 THD) (AC–DELCO #1261968)	3–J10,45
97–02	Y 4–SPD A/TRANS (M30) ...	24206030	1	11.50	BUSHING, T/CV (AC–DELCO #24206030)	3–F2,242
97	Y 4–SPD A/TRANS (M30) ...	12162202	1	4.55	CONNECTOR, SOL–TCC PWM VLV (BLUE) (2–WAY F) (W/O LEADS)	
97–02	Y 4–SPD A/TRANS (M30) ...	24208649	1	255.00	CONVERTER, TORQ (REMAN) (DHPG)	3–E15,1
97–02	Y 4–SPD A/TRANS (M30) ...	24206286	1	88.50	HOUSING, T/CV (AC–DELCO #24206286)	3–E15,102

4.122 HARNESS – SEAL, Transmission Solenoid

97–02	Y 4–SPD A/TRANS (M30) ...	15320476	1	82.75	HARNESS, A/TRNS WRG (INCLS TCC SOL VLV) (02.480) (AC–DELCO #15320476)	3–E15,66
97–02	Y 4–SPD A/TRANS (M30) ...	10471813	1	*1.85	SEAL, TCC SOL VLV (O RING) (SMALL DIA) (OTR) (AC–DELCO #10471813)	

4.123 BUSHING – RING – SEAL – VALVE, Transmission Input and Turbine Shaft

97–02	Y 4–SPD A/TRANS (M30) ...	8628915	1	11.50	BUSHING, TURB SHF (04.226) (AC–DELCO #8628915)	
97–02	Y 4–SPD A/TRANS (M30) ...	8667035	4	*1.85	RING, INPUT SHF FLUID SEAL (TEFLON) (AC–DELCO #8667035)	3–E6,619
97–02	Y 4–SPD A/TRANS (M30) ...	8630049	1	*3.40	SEAL, TURB SHF (O RING) (AC–DELCO #8630049)	3–E6,618
97–00	Y 4–SPD A/TRANS (M30) ...	8628732	2	4.55	VALVE, FWD CLU HSG BALL CHK (SINGLE ORIFICE) (TALL & NARROW) (04 226) (AC–DELCO #8628732)	3–E6,627
97–02	Y 4–SPD A/TRANS (M30) ...	24205181	1	4.55	VALVE, FWD CLU HSG BALL CHK (SHORT & WIDE) (AC–DELCO #24205181)	3–E6,627

cardiagn.com

4.123 BUSHING – RING – SEAL – VALVE, Transmission Input and Turbine Shaft (Con't)

97–02	Y 4–SPD A/TRANS (M30) ...	8685839	1	4.55	VALVE, TURB SHF BALL CHK (AC–DELCO #8685839)	3–E6,617
97–02	Y 4–SPD A/TRANS (M30) ...	24208262	1	4.55	VALVE, 3–4 CLU HSG BALL CHK (AC–DELCO #24208262)	3–E6,620

4.128 CAP – CLIP – COOLER – FITTING – NUT – PIPE – WASHER, Transmission Oil Cooler

01–02	Y	10301648	2	5.62	CAP, TRANS FLUID CLR PIPE CONN	3–F19,16
97–99	Y 4–SPD A/TRANS (M30) ...	10104507	2	3.33	CLIP, TRANS FLUID AUX CLR PIPE (AT TORQUE TUBE) (POSN #1) (STEEL) (06.672)	3–F17,5
97–01	Y 4–SPD A/TRANS (M30) ...	10182465	2	4.55	CLIP, TRANS FLUID AUX CLR PIPE (AT TORQUE TUBE) (POSN #2) .	3–F17,9
00–02	Y 4–SPD A/TRANS (M30) ...	26077839	2	3.33	CLIP, TRANS FLUID AUX CLR PIPE (AT TORQUE TUBE) (POSN #1) (VINYL DIPPED) (06.602)	3–F17,5
97–99	Y 4–SPD A/TRANS (M30) ...	10104507	2	3.33	CLIP, TRANS FLUID CLR PIPE (AT OIL PAN) (POSN #1) (STEEL) (06.672)	3–F17,5
97–01	Y 4–SPD A/TRANS (M30) ...	10182465	1	4.55	CLIP, TRANS FLUID CLR PIPE (AT OIL PAN) (POSN #2)	3–F17,9
00–02	Y 4–SPD A/TRANS (M30) ...	26077839	2	3.33	CLIP, TRANS FLUID CLR PIPE (AT OIL PAN) (POSN #1) (VINYL DIPPED) (06.602)	3–F17,5
97	Y 4–SPD A/TRANS (M30) ...	52480211	1	113.86	COOLER, TRANS FLUID (AC–DELCO #52480211)	1–L6,5
98	Y 4–SPD A/TRANS (M30) ...	52480215	1	79.56	COOLER, TRANS FLUID (RAD CODES PDG, SEC, WCS)	1–L6,5
99–01	Y 5.7G (LS1), 4–SPD A/TRANS (M30)	52480215	1	79.56	COOLER, TRANS FLUID (RAD CODES PDG, SEC, WCS)	1–L6,5
01–02	Y 4–SPD A/TRANS (M30) ...	52489280	2		FITTING, TRANS FLUID CLR OTLT PIPE (AT RAD)	
97–02	Y 4–SPD A/TRANS (M30) ...	8651654	1	7.60	FITTING, TRANS FLUID CLR PIPE (1/4 NPS TO 3/8 FLARE) (INLET TO CASE) (AC–DELCO #8651654)	3–E15,10
02	Y 5.7G (LS1), 4–SPD A/TRANS (M30)	8651654	1	7.60	FITTING, TRANS FLUID CLR PIPE (1/4 NPS TO 3/8 FLARE) (INLET TO CASE) (AC–DELCO #8651654)	3–E15,10
99	Y 4–SPD A/TRANS (M30) ...	10413046	1		NUT, TRANS FLUID CLR LWR PIPE .	
00–01	Y 4–SPD A/TRANS (M30) ...	10269714	1	3.33	NUT, TRANS FLUID CLR LWR PIPE (5/8–18 UNF 1 11/16" LONG) .	
00	Y 4–SPD A/TRANS (M30) ...	10269715	1	*1.75	NUT, TRANS FLUID CLR LWR PIPE (5/9–18 UNF 11/16" LONG) (08.963)	
97–00	Y 4–SPD A/TRANS (M30) ...	10425292	1	26.50	PIPE, TRANS FLUID CLR LWR (FRT)	3–F17,8
01–02	Y 4–SPD A/TRANS (M30) ...	10449532	1	15.90	PIPE, TRANS FLUID CLR LWR (FRT) (INCL NOT SERVICED SEPERATELY PIPE 10301667) .	
97–00	Y 4–SPD A/TRANS (M30) ...	10229483	1	26.50	PIPE, TRANS FLUID CLR UPR (FRT)	3–F17,7
01–02	Y 4–SPD A/TRANS (M30) ...	10449533	1	14.10	PIPE, TRANS FLUID CLR UPR (FRT) (INCL NOT SERVICED SEPERATELY PIPE 10301667) .	

cardiagn.com

4.128 CAP – CLIP – COOLER – FITTING – NUT – PIPE – WASHER, Transmission Oil Cooler (Con't)

99	Y 4–SPD A/TRANS (M30) ...	52482153	2	3.33	WASHER, TRANS FLUID CLR PIPE (SEALING)	
01–02	Y 4–SPD A/TRANS (M30) ...	52482153	1	3.33	WASHER, TRANS FLUID CLR PIPE (SEALING)	

4.158 GEAR – HOUSING, Transmission Input

97–02	Y 4–SPD A/TRANS (M30) ...	8663639	1	77.25	GEAR, INPUT INTL (AC–DELCO #8663639)	3–E6,664
97–02	Y 4–SPD A/TRANS (M30) ...	8667055	1	39.50	GEAR, REACTION INTL (AC–DELCO #8667055)	3–E6,684
97–02	Y 4–SPD A/TRANS (M30) ...	24200901	1	248.00	HOUSING, 3–4 CLU (W/INPUT SHF) (AC–DELCO #24200901)	3–E6,621

4.159 BEARING – GEAR – RING – SHELL KIT – WASHER, Transmission Sun Gear

97–99	Y 4–SPD A/TRANS (M30) ...	8646254	1	12.10	BEARING, INPUT CARR THR (AC–DELCO #8646254)	3–E6,683
97–02	Y 4–SPD A/TRANS (M30) ...	8642162	1	10.95	BEARING, INPUT SUN GR THR (AC–DELCO #8642162)	3–E6,637
97–02	Y 4–SPD A/TRANS (M30) ...	24217327	1	4.55	BEARING, INT REACTION GR SUPT THR (AC–DELCO #24217327)	3–E6,692
97–02	Y 4–SPD A/TRANS (M30) ...	8642215	1	14.10	BEARING, REACTION CARR THR (TO SUPT) (04.176) (AC–DELCO #8642215)	3–E6,683
97–02	Y 4–SPD A/TRANS (M30) ...	24217327	1	4.55	BEARING, REACTION CARR THR (TO REAC SHF) (AC–DELCO #24217327)	3–E6,692
97–02	Y 4–SPD A/TRANS (M30) ...	24213007	1	60.75	GEAR, INPUT SUN (AC–DELCO #24213007)	3–E6,658
97–02	Y 4–SPD A/TRANS (M30) ...	8642204	1	60.75	GEAR, REACTION SUN (INCLS BUSH & GEAR) (INDIVIDUAL COMPONENTS NOT SOLD SEPARATELY) (AC–DELCO #8642204)	3–E6,673
97–02	Y 4–SPD A/TRANS (M30) ...	8681553	1	4.55	RING, REACTION SUN GR RET (AC–DELCO #8681553)	3–E6,671
01–02	Y 4–SPD A/TRANS (M30) ...	24221190	1		SHELL KIT, REACTION SUN GR .	3–F7,3
97–02	Y 4–SPD A/TRANS (M30) ...	8642331	1	4.53	WASHER, REACTION SUN GR SHELL THR (04.176) (AC–DELCO #8642331)	3–E6,674

4.162 BEARING, Transmission Housing

97–02	Y 4–SPD A/TRANS (M30) ...	8642066	1	9.75	BEARING, REV INPUT CLU HSG THR (STATOR SHFT) (TO SEL WASHER) (AC–DELCO #8642066)	3–E6,615

4.163 PLATE – PLATE KIT – RING – SPRING, Transmission Clutch

97–01	Y 4–SPD A/TRANS (M30) ...	24209031	5	174.00	PLATE KIT, CLU (HAS FIBER PLTS) (AC–DELCO #24209031)	3–E6,8
97–00	Y 4–SPD A/TRANS (M30) ...	24209563	5	65.50	PLATE KIT, CLU (3–4 CLUTCH STEEL & FIBER) (AC–DELCO #24209563)	3–E6,654
02	Y 4–SPD A/TRANS (M30) ...	24209562	5	134.00	PLATE KIT, CLU (COMPL KIT, INCLUDING 3–4) (AC–DELCO #24209562)	3–F7,8

cardiagn.com

4.163 PLATE – PLATE KIT – RING – SPRING, Transmission Clutch (Con't)

97–02	Y 4–SPD A/TRANS (M30) ...	8647991	AR	70.25	PLATE KIT, FWD CLU (INCLS INST SHEET & PLATES) (AC–DELCO #8647991)	3–E6,5
97–02	Y 4–SPD A/TRANS (M30) ...	8687996	1	248.00	PLATE KIT, LOW & REV CLU (W/SUPT) (W/PSTN) (STEEL PLATES) (AC–DELCO #8687996)	3–E6,6
97–02	Y 4–SPD A/TRANS (M30) ...	24209032	1	122.00	PLATE KIT, 3–4 CLU (AC–DELCO #24209032)	3–E6,7
97–02	Y 4–SPD A/TRANS (M30) ...	8647058	1	11.65	PLATE, FWD CLU (WAVED) (AC–DELCO #8647058)	3–E6,648
97–02	Y 4–SPD A/TRANS (M30) ...	8654325	5	23.05	PLATE, FWD CLU (STEEL) (AC–DELCO #8654325)	3–E6,649
97–98	Y 4–SPD A/TRANS (M30) ...	8673254	5	13.80	PLATE, FWD CLU (FIBER) (AC–DELCO #8673254)	3–E6,649
99–02	Y 4–SPD A/TRANS (M30) ...	24210765	5	13.80	PLATE, FWD CLU (FIBER) (AC–DELCO #24210765)	3–F7,649
97–00	Y 4–SPD A/TRANS (M30) ...	8682866	1	11.65	PLATE, FWD CLU APPLY (AC–DELCO #8682866)	3–E6,646
01–02	Y 4–SPD A/TRANS (M30) ...	24212462	1	11.65	PLATE, FWD CLU APPLY (AC–DELCO #24212462)	3–F7,646
97–00	Y 4–SPD A/TRANS (M30) ...	8682867	1	11.65	PLATE, FWD CLU BKG (6.92–7.07MM) (ID A) (AC–DELCO #8682867)	3–E6,650
97–00	Y 4–SPD A/TRANS (M30) ...	8682868	1	10.20	PLATE, FWD CLU BKG (8.73–9.03MM) (ID B) (AC–DELCO #8682868)	3–E6,650
97–00	Y 4–SPD A/TRANS (M30) ...	8682871	1	10.20	PLATE, FWD CLU BKG (4.56–4.71MM) (ID E) (AC–DELCO #8682871)	3–E6,650
97–00	Y 4–SPD A/TRANS (M30) ...	24212467	1	5.35	PLATE, FWD CLU BKG (7.55MM–7.85MM) (AC–DELCO #24212467)	3–E6,650
97–00	Y 4–SPD A/TRANS (M30) ...	24212468	1	9.35	PLATE, FWD CLU BKG (8.14MM–8.44MM) (AC–DELCO #24212468)	3–E6,650
01–02	Y 4–SPD A/TRANS (M30) ...	24212466	1	9.35	PLATE, FWD CLU BKG (6.96MM–7.26MM) (AC–DELCO #24212466)	3–F7,650
01–02	Y 4–SPD A/TRANS (M30) ...	24212467	1	5.35	PLATE, FWD CLU BKG (7.55MM–7.85MM) (AC–DELCO #24212467)	3–E6,650
01–02	Y 4–SPD A/TRANS (M30) ...	24212468	1	9.35	PLATE, FWD CLU BKG (8.14MM–8.44MM) (AC–DELCO #24212468)	3–E6,650
01–02	Y 4–SPD A/TRANS (M30) ...	24212469	1	9.35	PLATE, FWD CLU BKG (8.73MM–9.03MM) (AC–DELCO #24212469)	3–F7,650
01–02	Y 4–SPD A/TRANS (M30) ...	24212470	1	11.65	PLATE, FWD CLU BKG (9.32MM–9.62MM) (AC–DELCO #24212470)	3–F7,650
97–02	Y 4–SPD A/TRANS (M30) ...	8676362	1	7.60	PLATE, LOW & REV CLU (WAVED) (AC–DELCO #8676362)	3–E6,682
97–02	Y 4–SPD A/TRANS (M30) ...	8680440	1	8.60	PLATE, LOW & REV CLU (ID 4, 8, 0) (1.314MM) (SELECTIVE) (AC–DELCO #8680440)	3–E6,682
97–98	Y 4–SPD A/TRANS (M30) ...	8684089	5	10.20	PLATE, LOW & REV CLU (FLAT FACED) (NON–SEGMENTED COMPLETE SET OF 5) (AC–DELCO #8684089)	3–E6,682

cardiagn.com

4.163 PLATE – PLATE KIT – RING – SPRING, Transmission Clutch (Con't)

97–02	Y 4–SPD A/TRANS (M30) ...	24205268	4	11.65	PLATE, LOW & REV CLU (ID BLANK) (1.829MM) (HAS HOLES IN TURB PLATES) (STEEL) (AC–DELCO #24205268)	3–E6,682
97–02	Y 4–SPD A/TRANS (M30) ...	24205270	1	12.40	PLATE, LOW & REV CLU (ID 4, 8, 0) (2.344MM) (HAS HOLES IN TURB PLATES) (AC–DELCO #24205270)	3–E6,682
99–01	Y 4–SPD A/TRANS (M30) ...	8684089	5	10.20	PLATE, LOW & REV CLU (FLAT FACED) (NON–SEGMENTED COMPLETE SET OF 5) (AC–DELCO #8684089)	3–E6,682
02	Y 4–SPD A/TRANS (M30) ...	24216946	5	9.80	PLATE, LOW & REV CLU (FLAT FACED) (SEGMENTED–COMPLETE SET OF 5) (AC–DELCO #24216946) .	3–F7,682
97–02	Y 4–SPD A/TRANS (M30) ...	8642154	2	23.05	PLATE, OVERRUN CLU (2.34MM THK) (FLAT STEEL) (AC–DELCO #8642154)	3–E6,645
97	Y 4–SPD A/TRANS (M30) ...	8673253	2	13.80	PLATE, OVERRUN CLU (1.93–2.13 THK) (GROOVED) (AC–DELCO #8673253)	3–E6,645
98–02	Y 4–SPD A/TRANS (M30) ...	24210766	2	13.80	PLATE, OVERRUN CLU (1.93–2.13 THK) (GROOVED) (AC–DELCO #24210766)	3–E6,645
97–02	Y 4–SPD A/TRANS (M30) ...	8663074	1	13.80	PLATE, REV INPUT CLU (WAVED) (AC–DELCO #8663074)	3–E6,611
97–02	Y 4–SPD A/TRANS (M30) ...	8673605	4	6.60	PLATE, REV INPUT CLU (FLAT FACED) (153MM DIA) (AC–DELCO #8673605)	3–E6,612
97–02	Y 4–SPD A/TRANS (M30) ...	24205267	4	4.55	PLATE, REV INPUT CLU (W/ HOLES IN TURB PLATES) (AC–DELCO #24205267)	3–E6,612
97–01	Y 4–SPD A/TRANS (M30) ...	8682863	1	11.65	PLATE, REV INPUT CLU BKG (7.25–7.41MM) (AC–DELCO #8682863)	3–E6,613
97–01	Y 4–SPD A/TRANS (M30) ...	8682864	1	11.65	PLATE, REV INPUT CLU BKG (6.52–6.68MM) (AC–DELCO #8682864)	3–E6,613
97–01	Y 4–SPD A/TRANS (M30) ...	8682865	1	11.65	PLATE, REV INPUT CLU BKG (5.79–5.95MM) (AC–DELCO #8682865)	3–E6,613
02	Y 4–SPD A/TRANS (M30) ...	24212463	1	11.65	PLATE, REV INPUT CLU BKG (5.787–5.947MM) (AC–DELCO #24212463)	3–F7,613
02	Y 4–SPD A/TRANS (M30) ...	24212464	1	7.75	PLATE, REV INPUT CLU BKG (6.518–6.678MM) (AC–DELCO #24212464)	3–F7,613
02	Y 4–SPD A/TRANS (M30) ...	24212465	1	11.65	PLATE, REV INPUT CLU BKG (7.409–7.249MM) (AC–DELCO #24212465)	3–F7,613
97–02	Y 4–SPD A/TRANS (M30) ...	8685044	1	13.80	PLATE, 3–4 CLU APPLY (AC–DELCO #8685044)	3–E6,653
97–00	Y 4–SPD A/TRANS (M30) ...	8685046	1	13.80	PLATE, 3–4 CLU BKG (ID BY 3 DIMPLES) (AC–DELCO #8685046)	3–E6,655
97–00	Y 4–SPD A/TRANS (M30) ...	24211896	1	8.60	PLATE, 3–4 CLU BKG (4.79–4.99MM THK) (AC–DELCO #24211896)	3–E6,655

cardiagn.com

4.163 PLATE – PLATE KIT – RING – SPRING, Transmission Clutch (Con't)

97–00	Y 4–SPD A/TRANS (M30) ...	24212459	1	4.70	PLATE, 3–4 CLU BKG (3.90MM–4.10MM) (AC–DELCO #24212459)	3–E6,655
01–02	Y 4–SPD A/TRANS (M30) ...	24212459	1	4.70	PLATE, 3–4 CLU BKG (3.90MM–4.10MM) (AC–DELCO #24212459)	3–E6,655
01–02	Y 4–SPD A/TRANS (M30) ...	24212460	1	7.75	PLATE, 3–4 CLU BKG (4.79–4.99MM) (AC–DELCO #24212460)	3–F7,655
01–02	Y 4–SPD A/TRANS (M30) ...	24212461	1	4.70	PLATE, 3–4 CLU BKG (5.68MM–5.88MM) (AC–DELCO #24212461)	3–F7,655
97–02	Y 4–SPD A/TRANS (M30) ...	8642170	1	10.20	RING, FWD CLU BKG PLT RET (AC–DELCO #8642170)	3–E6,651
97–02	Y 4–SPD A/TRANS (M30) ...	8663636	1	4.55	RING, 3–4 CLU BKG PLT RET (AC–DELCO #8663636)	3–E6,656
97–02	Y 4–SPD A/TRANS (M30) ...	24206085	1	4.55	SPRING, OVERRUN CLU (AC–DELCO #24206085)	3–E6,634

4.164 CLUTCH – RING – SPRING, Transmission Clutch

97–02	Y 4–SPD A/TRANS (M30) ...	24210961	1	177.00	CLUTCH, FWD RLR (REG SPD, INCLS INPUT SUN GEAR) (AC–DELCO #24210961)	3–E6,11
97–02	Y 4–SPD A/TRANS (M30) ...	8647337	1	4.55	RING, LOW & REV CLU SPR RET RET (04.159) (AC–DELCO #8647337)	3–E6,693
97–02	Y 4–SPD A/TRANS (M30) ...	8667022	1	4.55	RING, REV INPUT CLU BKG PLT RET (YELLOW) (AC–DELCO #8667022)	3–E6,614
97–02	Y 4–SPD A/TRANS (M30) ...	8628059	1	4.53	RING, REV INPUT CLU SPR RET (AC–DELCO #8628059)	3–E6,610
97–02	Y 4–SPD A/TRANS (M30) ...	8642227	1	9.57	SPRING, LOW & REV CLU (AC–DELCO #8642227)	3–E6,694
97–02	Y 4–SPD A/TRANS (M30) ...	8647284	1	9.57	SPRING, REV INPUT CLU (AC–DELCO #8647284)	3–E6,609

4.166 PISTON – PISTON KIT – SEAL – SEAL KIT – SUPPORT, Transmission Clutch

97–02	Y 4–SPD A/TRANS (M30) ...	24209542	1	65.50	PISTON KIT, FWD CLU & OVERRUN CLU (AC–DELCO #24209542)	3–E6,10
97–02	Y 4–SPD A/TRANS (M30) ...	24205272	1	18.35	PISTON, FWD CLU (AC–DELCO #24205272)	3–E6,630
97–02	Y 4–SPD A/TRANS (M30) ...	8685549	1	44.25	PISTON, LOW & REV CLU (AC–DELCO #8685549)	3–E6,695
97–02	Y 4–SPD A/TRANS (M30) ...	24205273	1	34.75	PISTON, OVERRUN CLU (STEEL W/ INTEGRAL SEAL) (AC–DELCO #24205273)	3–E6,632
97–02	Y 4–SPD A/TRANS (M30) ...	8667841	1	25.25	PISTON, REV INPUT CLU (.095 HOLE) (AC–DELCO #866784) .	3–E6,607
97–02	Y 4–SPD A/TRANS (M30) ...	24200290	1	34.75	PISTON, 3–4 CLU (AC–DELCO #24200290)	3–E6,623
97–02	Y 4–SPD A/TRANS (M30) ...	8657922	1	6.80	SEAL KIT, REV INPUT CLU (INCLS SEALS) (AC–DELCO #8657922)	3–E6,608
97–02	Y 4–SPD A/TRANS (M30) ...	8642919	1	11.50	SEAL KIT, 3–4 CLU PSTN (FOA) (AC–DELCO #8642919)	3–E6,1
97–99	Y 4–SPD A/TRANS (M30) ...	8686146	1	7.60	SEAL, FWD CLU PSTN OTR (AC–DELCO #8686146)	3–E6,629

cardiagn.com

4.166 PISTON – PISTON KIT – SEAL – SEAL KIT – SUPPORT, Transmission Clutch (Con't)

97	Y 5.7G (LS1), 4–SPD A/TRANS (M30), 3.15R (G90)	8648987	1	4.55	SEAL, LOW & REV CLU PSTN INTER (INCLS INR, OTR & INTER SEALS) (AC–DELCO #8648987)	
97	Y 5.7G (LS1), 4–SPD A/TRANS (M30), 3.15R (G90)	8648987	1	4.55	SEAL, LOW & REV CLU PSTN OTR (INCLS INR, OTR & INTER SEALS) (AC–DELCO #8648987)	
97–02	Y 4–SPD A/TRANS (M30) ...	8681727	1	122.00	SUPPORT, LOW & REV CLU (04.180) (AC–DELCO #8681727)	3–E6,679

4.167 RING – SPRING, Transmission Clutch

97–02	Y 4–SPD A/TRANS (M30) ...	8685043	1	13.80	RING, 3–4 CLU APPL (AC–DELCO #8685043)	3–E6,625
97–02	Y 4–SPD A/TRANS (M30) ...	8667424	5	4.55	SPRING, 3–4 CLU (BOOST) (INCLS RET & (2) SPRNGS) (04.163) (AC–DELCO #8667424)	3–E6,600
97–02	Y 4–SPD A/TRANS (M30) ..	8685244	1	6.73	SPRING, 3–4 CLU (INPUT) (105.12MM O.D.) (AC–DELCO #8685244)	3–E6,626

4.169 BUSHING – HOUSING – PIN – VALVE, Transmission Clutch

97–02	Y 4–SPD A/TRANS (M30) ...	8628917	1	5.55	BUSHING, DIR CLU HSG RR (AC–DELCO #8628917)	3–E6,606
97–02	Y 4–SPD A/TRANS (M30) ...	24205298	1	106.00	HOUSING, FWD CLU (INCLS HOUSINGS & VALVE) (AC–DELCO #24205298)	3–E6,628
97–02	Y 4–SPD A/TRANS (M30) ...	8681295	1	70.25	HOUSING, REV INPUT CLU (AC–DELCO #8681295)	3–E6,605
97–02	Y 4–SPD A/TRANS (M30) ...	8680765	1	4.55	PIN, FWD CLU ABUSE VLV BORE PLUG (04.265) (AC–DELCO #8680765)	3–E24,360
97–98	Y 4–SPD A/TRANS (M30) ...	8622757	1	*2.25	VALVE, FWD CLU HSG BALL CHK (3/16 DIA) (STL BALL ONLY) (04.256) (AC–DELCO #8622757)	

4.175 CARRIER – SHAFT – SHELL – SUPPORT, Transmission Output/Counter Shaft or Carrier

97–02	Y 4–SPD A/TRANS (M30) ...	24212177	1	110.00	CARRIER, INPUT (COMPL) (AC–DELCO #24212177)	3–E6,662
97–02	Y 4–SPD A/TRANS (M30) ...	8654200	1	153.00	CARRIER, REACTION (AC–DELCO #8654200)	3–E6,681
97–02	Y 4–SPD A/TRANS (M30) ...	24207079	1	134.00	SHAFT, OUTPUT (AC–DELCO #24207079)	3–E6,687
97–00	Y 4–SPD A/TRANS (M30) ...	8681518	1	110.00	SHAFT, REACTION CARR (AC–DELCO #8681518)	3–E6,666
02	Y 4–SPD A/TRANS (M30) ...	24222756	1		SHAFT, REACTION CARR	
97–00	Y 4–SPD A/TRANS (M30) ...	8683439	1	42.25	SHELL, REACTION SUN GR (AC–DELCO #8683439)	3–E6,670
01–02	Y 4–SPD A/TRANS (M30) ...	24217145	1	42.25	SHELL, REACTION SUN GR (AC–DELCO #24217145)	3–F7,670
97–02	Y 4–SPD A/TRANS (M30) ...	8681491	1	42.25	SUPPORT, REACTION INTL GR (AC–DELCO #8681491)	3–E6,685

cardiagn.com

4.176 BUSHING – RING – SEAL – WASHER, Transmission Output/Counter Shaft or Carrier

97–02	Y 4–SPD A/TRANS (M30) ...	8642908	1	14.10	BUSHING, REACTION CARR SHF FRT (AC–DELCO #8642908) .	3–E6,665
97–02	Y 4–SPD A/TRANS (M30) ...	8642907	1	14.10	BUSHING, REACTION CARR SHF RR (AC–DELCO #8642907) ..	3–E6,667
97–02	Y 4–SPD A/TRANS (M30) ...	8642909	1	14.10	BUSHING, REACTION SUN GR (AC–DELCO #8642909)	3–E6,672
97–02	Y 4–SPD A/TRANS (M30) ...	8642220	1	4.55	RING, INT REACTION GR SUPT RET (AC–DELCO #8642220) .	3–E6,686
97–02	Y 4–SPD A/TRANS (M30) ...	8654141	1	4.55	RING, OUTPUT SHF RET (TO INPUT CARR) (AC–DELCO #8654141)	3–E6,661
97–02	Y 4–SPD A/TRANS (M30) ...	8642201	1	4.55	RING, REACTION CARR SHF RET (TO INT GR) (AC–DELCO #86422u1)	3–E6,668
97–02	Y 4–SPD A/TRANS (M30) ...	8642105	1	4.55	RING, 2–4 BAND SERVO 2ND APPL PSTN RET (AC–DELCO #8642105)	3–E15,14
97–02	Y 4–SPD A/TRANS (M30) ...	24207010	1	8.50	SEAL, OUTPUT SHF (AC–DELCO #24207010)	3–E6,636
97–02	Y 4–SPD A/TRANS (M30) ...	12369456	1	7.95	SEAL, OUTPUT SHF SEAL RET (O RING) (05.508)	3–J4,6
02	YY MANUAL 6 SPD O/D TRANS, TREMEC (M12)	12369456	1	7.95	SEAL, OUTPUT SHF SEAL RET (O RING) (05.508)	3–J4,6
97–00	Y 4–SPD A/TRANS (M30) ...	8642202	1	5.00	WASHER, REACTION CARR SHF THR (08642202 TO BE USED ONLY WITH 08683439) (AC–DELCO #8642202)	3–E6,669
01–02	Y 4–SPD A/TRANS (M30) ...	24217328	1	5.84	WASHER, REACTION CARR SHF THR (04.159) (AC–DELCO #24217328)	3–F7,669

4.180 BUSHING – RACE – RING – ROLLER – SPRING – VALVE, Transmission Clutch

97–02	Y 4–SPD A/TRANS (M30) ...	8642905	1	12.10	BUSHING, REV INPUT CLU HSG FRT (AC–DELCO #8642905) .	3–E6,603
97–02	Y 4–SPD A/TRANS (M30) ...	8673300	1	42.25	RACE, LOW CLU RLR INR (OVERRUN CLU) (AC–DELCO #8673300)	3–E6,675
97–02	Y 4–SPD A/TRANS (M30) ...	24200278	1	4.53	RING, LOW & REV CLU SUPT RET (AC–DELCO #24200278)	3–E6,676
97–02	Y 4–SPD A/TRANS (M30) ...	6261051	2	4.53	RING, LOW CLU RLR RET (O/RUN) (AC–DELCO #6261051)	3–E6,677
97–02	Y 4–SPD A/TRANS (M30) ...	8647083	1	4.55	RING, OVERRUN CLU HUB RET (SNAP) (AC–DELCO #8647083)	3–E6,638
97–02	Y 4–SPD A/TRANS (M30) ...	7471008	1	34.75	ROLLER, LOW CLU (AC–DELCO #7471008)	3–E6,678
97–02	Y 4–SPD A/TRANS (M30) ...	6261415	1	5.00	SPRING, LOW & REV CLU SUPT (RET) (AC–DELCO #6261415)	3–E6,680
97–99	Y 4–SPD A/TRANS (M30) ...	8628732	AR	4.55	VALVE, A/TRNS FLUID/PUMP CVR BALL CHK (7 10MM (MAX) (SINGLE ORIFICE) (TALL & NARROW) (04.226) (AC–DELCO #8628732)	
97–02	Y 4–SPD A/TRANS (M30) ...	8663890	1	4.55	VALVE, A/TRNS FLUID/PUMP CVR BALL CHK (DOUBLE ORIFICE) (W/BALL) (AC–DELCO #8663890)	3–E15,42

cardiagn.com

4.189 SEAL KIT – WASHER, Transmission Clutch (Low & Reverse)

97–02	Y 4–SPD A/TRANS (M30) ...	8648987	1	4.55	SEAL KIT, LOW & REV CLU (INCLS INR, OTR & INTER SEALS) (04.166) (AC–DELCO #8648987)	3–E6,696
97–02	Y 4–SPD A/TRANS (M30) ...	8642041	1	*1.87	WASHER, REV INPUT CLU HSG THR (04.226) (AC–DELCO #08642041)	3–E6,616
97–02	Y 4–SPD A/TRANS (M30) ...	8642067	1	7.43	WASHER, REV INPUT CLU HSG THR (TO STATOR SHF) (1.87–1.97MM) (04.158) (AC–DELCO #8642067)	3–E6,616
97–02	Y 4–SPD A/TRANS (M30) ...	8642068	1	7.43	WASHER, REV INPUT CLU HSG THR (TO STATOR SHF) (2.04–2.14MM) (04.158) (AC–DELCO #8642068)	3–E6,616
97–02	Y 4–SPD A/TRANS (M30) ...	8642069	1	7.43	WASHER, REV INPUT CLU HSG THR (TO STATOR SHF) (2.21–2.31MM) (04.158) (AC–DELCO #8642069)	3–E6,616
97–02	Y 4–SPD A/TRANS (M30) ...	8642070	1	7.43	WASHER, REV INPUT CLU HSG THR (TO STATOR SHF) (2.38–2.48MM) (04.158) (AC–DELCO #8642070)	3–E6,616
97–02	Y 4–SPD A/TRANS (M30) ...	8642071	1	7.43	WASHER, REV INPUT CLU HSG THR (TO STATOR SHF) (2.55–2.65MM) (04.158) (AC–DELCO #8642071)	3–E6,616
97–02	Y 4–SPD A/TRANS (M30) ...	8642072	1	7.43	WASHER, REV INPUT CLU HSG THR (TO STATOR SHF) (2.72–2.82MM) (04.158) (AC–DELCO #8642072)	3–E6,616
97–02	Y 4–SPD A/TRANS (M30) ...	8642073	1	7.43	WASHER, REV INPUT CLU HSG THR (TO STATOR SHF) (2.89–2.99MM) (04.158) (AC–DELCO #8642073)	3–E6,616
97–02	Y 4–SPD A/TRANS (M30) ...	8642074	1	7.43	WASHER, REV INPUT CLU HSG THR (TO STATOR SHF) (3.06–3.16MM) (04.158) (AC–DELCO #8642074)	3–E6,616

4.195 MAGNET – PAN – PAN KIT – PLUG, Transmission Oil Pan

97–02	Y 4–SPD A/TRANS (M30) ...	8665830	1	4.55	MAGNET, A/TRNS FLUID PAN (04.105) (AC–DELCO #8665830)	3–E15,74
97–02	Y 4–SPD A/TRANS (M30) ...	8663948	1	30.00	PAN KIT, A/TRNS FLUID (SHALLOW W/PAN, GSKT & MAGNET, DRAIN PLUG NOT INCLUDED) (AC–DELCO #8663948)	3–E15,75
97–02	Y 4–SPD A/TRANS (M30) ...	24208593	1	96.75	PAN KIT, A/TRNS FLUID (HAS DEEP SUMP, GSKT, MAGNET, DR PLUG) (AC–DELCO #24208593)	3–E15,75
97–02	Y 4–SPD A/TRANS (M30) ...	8667545	1	30.00	PAN, A/TRNS FLUID (SHALLOW PAN) (AC–DELCO #8667545) .	
97–02	Y 4–SPD A/TRANS (M30) ...	24207601	1	13.80	PLUG, A/TRNS FLUID PAN DRN (AC–DELCO #24207601)	3–E15,101

cardiagn.com

4.196 BOLT – GASKET, Transmission Oil Pan

97	Y 4–SPD A/TRANS (M30) ...	8657000	14	*.92	BOLT, A/TRNS FLUID PAN (M8X1.25X19, 16)	3–E15,76
98–02	Y 4–SPD A/TRANS (M30) ...	8657000	16	*.92	BOLT, A/TRNS FLUID PAN (M8X1.25X19, 16)	3–E15,76
97–02	Y 4–SPD A/TRANS (M30) ...	8654799	1	7.60	GASKET, A/TRNS FLUID PAN (AC–DELCO #8654799)	3–E15,73

4.197 BOLT – COVER – FILTER KIT, Transmission Oil Suction Tube

97–02	Y 4–SPD A/TRANS (M30) ...	8680764	3	*1.85	BOLT, FLUID PASG CVR (M6X1X17.7) (04.265) (AC–DELCO #8680764)	3–E15,77
97–02	Y 4–SPD A/TRANS (M30) ...	8682792	1	8.60	COVER, A/TRNS CASE FLUID PASG (04.265) (AC–DELCO #8682792)	3–E15,53
97–02	Y 4–SPD A/TRANS (M30) ...	24208574	1	25.50	FILTER KIT, A/TRNS FLUID (DEEP SUMP) (INCLS FILTER, GASKET, SEAL & INSTR SHT) (AC–DELCO #24208574)	3–E15,3

4.210 ROTOR, Transmission Oil Pump & Governor

97–02	Y 4–SPD A/TRANS (M30) ...	8649951	1	56.00	ROTOR, A/TRNS FLUID PUMP (17.955MM) (W/GDE, VANES & SEALS) (04.224) (AC–DELCO #8649951)	3–F2,212
97–02	Y 4–SPD A/TRANS (M30) ...	8649952	1	56.00	ROTOR, A/TRNS FLUID PUMP (17.968MM) (W/GDE, VANES & SEALS) (04.224) (AC–DELCO #8649952)	3–F2,212
97–02	Y 4–SPD A/TRANS (M30) ...	8649953	1	56.00	ROTOR, A/TRNS FLUID PUMP (17.981MM) (W/GDE, VANES & SEALS) (04.224) (AC–DELCO #8649953)	3–F2,212
97–02	Y 4–SPD A/TRANS (M30) ...	8649954	1	56.00	ROTOR, A/TRNS FLUID PUMP (17.994MM) (W/GDE, VANES & SEALS) (04.224) (AC–DELCO #8649954)	3–F2,212
97–02	Y 4–SPD A/TRANS (M30) ...	8649955	1	56.00	ROTOR, A/TRNS FLUID PUMP (18.007MM) (W/GDE, VANES & SEALS) (04.224) (AC–DELCO #8649955)	3–F2,212
98–02	Y 4–SPD A/TRANS (M30) ...	24219540	1	37.25	ROTOR, A/TRNS FLUID PUMP (17.974MM) (04.224) (AC–DELCO #24219540)	
98–02	Y 4–SPD A/TRANS (M30) ...	24219541	1	56.00	ROTOR, A/TRNS FLUID PUMP (17.987MM) (04.224) (AC–DELCO #24219541)	
98–02	Y 4–SPD A/TRANS (M30) ...	24219542	1	56.00	ROTOR, A/TRNS FLUID PUMP (18.00MM) (04.224) (AC–DELCO #24219542)	
01–02	Y 4–SPD A/TRANS (M30) ...	24219538	1		ROTOR, A/TRNS FLUID PUMP (17.948MM) (AC–DELCO #24219538)	
01–02	Y 4–SPD A/TRANS (M30) ..	24219539	1	56.00	ROTOR, A/TRNS FLUID PUMP (17.961MM) (AC–DELCO #24219539)	

cardiagn.com

4.224 BODY – BODY KIT – COVER – COVER KIT – ORIFICE – PLUG – SCREEN – SEAL – SLIDE, Transmission Oil Pump

97–02	Y 4–SPD A/TRANS (M30) ...	24208606	1	454.00	BODY KIT, A/TRNS FLUID PUMP (13 VANE) (AC–DELCO #24208606)	3–F2,200
97–02	Y 4–SPD A/TRANS (M30) ...	8649964	1	587.00	BODY, A/TRNS FLUID PUMP (10 VANE) (INCLS BODY, GUIDE, RING, RET, ROTOR, PIN, SEAL KIT, SLIDE, SPR&VANE) (AC–DELCO #8649964)	
98	Y 4–SPD A/TRANS (M30), (2ND DES)	24213268	1	454.00	COVER KIT, A/TRNS FLUID PUMP (13–VANE) (INCLS COVER & RINGS) (W/JULIAN DATE 98–019 & AFTER. FOR 1ST DSGN SEE 24213024) (AC–DELCO #24213268)	3–F2,215
99–02	Y 4–SPD A/TRANS (M30) ...	24213268	1	454.00	COVER KIT, A/TRNS FLUID PUMP (13–VANE) (INCLS COVER & RINGS) (AC–DELCO #24213268)	3–F2,215
97	Y 4–SPD A/TRANS (M30) ...	24213024	1	454.00	COVER, A/TRNS FLUID PUMP (REMAN) (13–VANE) (AC–DELCO #24213024)	3–F2,215
98	Y 4–SPD A/TRANS (M30), (1ST DES)	24213024	1	454.00	COVER, A/TRNS FLUID PUMP (REMAN) (13–VANE) (W/JULIAN DATE 98–018 & PRIOR, FOR 2ND DSGN SEE 24213268) (AC–DELCO #24213024)	3–F2,215
97–02	Y 4–SPD A/TRANS (M30) ...	24203787	1	4.53	ORIFICE, A/TRNS FLUID PUMP AIR BL (AC–DELCO #24203787) ..	3–F2,240
97–02	Y 4–SPD A/TRANS (M30) ...	8663707	2	4.55	ORIFICE, LUB FLUID (4.3MM DIA) (AC–DELCO #8663707)	3–E6,698
97–02	Y 4–SPD A/TRANS (M30) ...	8634284	1	7.43	ORIFICE, TCC SIG (4.85MM DIA) (AC–DELCO #8634284)	3–F2,238
97–02	Y 4–SPD A/TRANS (M30) ...	24203787	1	4.53	ORIFICE, 3–4 CLU BL (AC–DELCO #24203787)	3–F2,240
97–02	Y 4–SPD A/TRANS (M30) ...	8623886	8	4.53	PLUG, A/TRNS FLUID PUMP CVR (6.80MM DIA) (AC–DELCO #8623886)	3–F2,236
97–02	Y 4–SPD A/TRANS (M30) ...	8642912	1	4.55	SCREEN, A/TRNS FLUID PUMP CVR (W/SEAL) (AC–DELCO #8642912)	3–F2,232
97–02	Y 4–SPD A/TRANS (M30) ...	8642581	1	*1.85	SEAL, A/TRNS FLUID PUMP CVR SCRN (AC–DELCO #8642581)	3–F2,231
97	Y 4–SPD A/TRANS (M30) ...	24205405	1	27.75	SLIDE, A/TRNS FLUID PUMP (17.948 MM) (AC–DELCO #24205405)	3–F2,203
97	Y 4–SPD A/TRANS (M30) ...	24205406	1	27.75	SLIDE, A/TRNS FLUID PUMP (17.961 MM) (AC–DELCO #24205406)	3–F2,203
97	Y 4–SPD A/TRANS (M30) ...	24205407	1	27.75	SLIDE, A/TRNS FLUID PUMP (17.974 MM) (AC–DELCO #24205407)	3–F2,203
97	Y 4–SPD A/TRANS (M30) ...	24205408	1	27.75	SLIDE, A/TRNS FLUID PUMP (17.987 MM) (AC–DELCO #24205408)	3–F2,203
97	Y 4–SPD A/TRANS (M30) ...	24205409	1	27.75	SLIDE, A/TRNS FLUID PUMP (18.000 MM) (AC–DELCO #24205409)	3–F2,203

cardiagn.com

4.224 BODY – BODY KIT – COVER – COVER KIT – ORIFICE – PLUG – SCREEN – SEAL – SLIDE, Transmission Oil Pump (Con't)

98–02	Y 4–SPD A/TRANS (M30) ...	24212478	1	11.25	SLIDE, A/TRNS FLUID PUMP (17.948) (AC–DELCO #24212478)	3–F2,203
98–02	Y 4–SPD A/TRANS (M30) ...	24212479	1	9 80	SLIDE, A/TRNS FLUID PUMP (17.961MM) (AC–DELCO #24212479)	3–F2,203
98–02	Y 4–SPD A/TRANS (M30) ...	24212480	1	9.80	SLIDE, A/TRNS FLUID PUMP (17.974MM) (AC–DELCO #24212480)	3–F2,203
98–02	Y 4–SPD A/TRANS (M30) ...	24212481	1	9.35	SLIDE, A/TRNS FLUID PUMP (17.987MM) (AC–DELCO #24212481)	3–F2,203
98–02	Y 4–SPD A/TRANS (M30) ...	24212482	1	9.35	SLIDE, A/TRNS FLUID PUMP (18.00MM) (AC–DELCO #24212482)	3–F2,203

4.226 BOLT – BUSHING – GASKET – GUIDE – PIN – RETAINER – RING – SEAL – SEAL KIT – SPRING – VALVE – VANE, Transmission Oil Pump

97–98	Y 4–SPD A/TRANS (M30) ...	24210819	7	4.53	BOLT, A/TRNS FLUID PUMP (M8X1.25X60) (INCLS SEAL) (AC–DELCO #24210819)	3–E15,2
99–02	Y 4–SPD A/TRANS (M30) ...	24210819	7	4.53	BOLT, A/TRNS FLUID PUMP (M8X1.25X60) (INCLS SEAL) (AC–DELCO #24210819)	3–E15,2
97–02	Y 4–SPD A/TRANS (M30) ...	8647954	1	11.50	BUSHING, INPUT SHF FRT (AC–DELCO #8647954)	3–F2,234
97–02	Y 4–SPD A/TRANS (M30) ...	8642904	1	9.75	BUSHING, INPUT SHF RR (AC–DELCO #8642904)	3–F2,241
97–02	Y 4–SPD A/TRANS (M30) ...	24206030	1	11.50	BUSHING, O/PMP BODY (04.115) (AC–DELCO #24206030)	
97–02	Y 4–SPD A/TRANS (M30) ...	12337931	1	4.53	GASKET, A/TRNS FLUID PUMP (AC–DELCO #12337931)	3–E15,6
97–02	Y 4–SPD A/TRANS (M30) ...	24205410	1	4.55	GUIDE, A/TRNS FLUID PUMP ROT (13 VANE) (AC–DELCO #24205410)	3–F2,211
97–02	Y 4–SPD A/TRANS (M30) ...	8634097	1	4.53	PIN, A/TRNS FLUID PUMP SLIDE PIV (AC–DELCO #8634097) ..	3–F2,205
97–02	Y 4–SPD A/TRANS (M30) ...	8654491	1	*1.85	RETAINER, T/CV FLUID SEAL (AC–DELCO #8654491)	3–F2,244
97–02	Y 4–SPD A/TRANS (M30) ...	24201144	2	7.60	RING, A/TRNS FLUID PUMP VANE (AC–DELCO #24201144)	3–F2,210
97–02	Y 4–SPD A/TRANS (M30) ...	8681292	2	4.55	RING, REV INPUT CLU HSG FLUID SEAL (AC–DELCO #8681292)	3–F2,230
97–02	Y 4–SPD A/TRANS (M30) ...	8634906	1	11.50	SEAL KIT, A/TRNS FLUID PUMP SLIDE (INCLS RING, SEALS&SUPT) (AC–DELCO #8634906)	3–F2,3
97–02	Y 4–SPD A/TRANS (M30) ...	24210605	1	4.55	SEAL, A/TRNS FLUID PUMP (AC–DELCO #24210605)	3–E15,5
97–02	Y 4–SPD A/TRANS (M30) ...	12337996	7	*1.85	SEAL, A/TRNS FLUID PUMP BOLT (PUMP TO CASE BOLT) (AC–DELCO #12337996)	3–E15,3
97–02	Y 4–SPD A/TRANS (M30) ...	24202535	1	4.55	SEAL, T/CV FLUID (AC–DELCO #24202535)	3–F2,243
97–02	Y 4–SPD A/TRANS (M30) ...	8639562	1	4.55	SPRING, A/TRNS FLUID PUMP SLIDE INR (AC–DELCO #8639562)	3–F2,207

cardiagn.com

4.226 BOLT – BUSHING – GASKET – GUIDE – PIN – RETAINER – RING – SEAL – SEAL KIT – SPRING – VALVE – VANE, Transmission Oil Pump (Con't)

97–02	Y 4–SPD A/TRANS (M30) ...	8639563	1	4.55	SPRING, A/TRNS FLUID PUMP SLIDE OTR (AC–DELCO #8639563)	3–F2,206
97–02	Y 4–SPD A/TRANS (M30) ...	8634098	1	4.53	SPRING, A/TRNS FLUID PUMP SLIDE PIV PIN (AC–DELCO #8634098)	3–F2,204
97–98	Y 4–SPD A/TRANS (M30) ...	8622757	1	*2.25	VALVE, A/TRNS FLUID/PUMP CVR BALL CHK (3/16 DIA) (STL BALL ONLY) (04.256) (AC–DELCO #8622757)	
97	Y	8631280	10	*1.70	VANE, A/TRNS FLUID PUMP (AC–DELCO #8631280)	3–F2,213
98–02	Y	8631280	13	*1.70	VANE, A/TRNS FLUID PUMP (AC–DELCO #8631280)	3–F2,213

4.228 ACCUMULATOR – COVER – HOUSING – PIN – PISTON – PISTON KIT – RING – VALVE, Transmission Servo & Accumulator

97–98	Y 4–SPD A/TRANS (M30) ...	24201956	1	39.50	ACCUMULATOR, 1–2 (AC–DELCO #24201956)	3–E15,7
99–01	Y 4–SPD A/TRANS (M30) ...	24203239	1	39.50	ACCUMULATOR, 1–2 (AC–DELCO #24203239)	3–E15,7
02	Y 4–SPD A/TRANS (M30) ...	24220143	1		ACCUMULATOR, 1–2 (AC–DELCO #24220143)	3–E15,7
97–02	Y 4–SPD A/TRANS (M30) ...	24206338	1	7.43	COVER, FWD CLU ACCUM (W/SLOTS) (AC–DELCO #24206338)	3–E24,363
97–00	Y 4–SPD A/TRANS (M30) ...	8686084	1	23.05	COVER, 1–2 ACCUM (AC–DELCO #8686084)	3–E15,57
01–02	Y 4–SPD A/TRANS (M30) ...	24219935	1		COVER, 1–2 ACCUM (AC–DELCO #24219935)	3–E15,57
97–02	Y 4–SPD A/TRANS (M30) ...	8642979	1	17.60	COVER, 2–4 SERVO (W/SEAL) (INCLS RING) (04.241) (AC–DELCO #8642979)	3–E15,28
97–02	Y 4–SPD A/TRANS (M30) ...	8673039	1	11.50	HOUSING, 2–4 BAND SERVO 2ND APPL (AC–DELCO #8673039)	3–E15,20
97–02	Y 4–SPD A/TRANS (M30) ...	3684426	1	4.55	PIN, 1–2 ACCUM PSTN (04.226) (AC–DELCO #8684426)	3–E15,57
97–02	Y 4–SPD A/TRANS (M30) ...	8628273	1	4.53	PIN, 3–4 ACCUM PSTN (04.226) (AC–DELCO #8628273)	3–E15,43
97–02	Y 4–SPD A/TRANS (M30) ...	24204496	1	13.80	PISTON KIT, 1–2 & 3–4 ACCUM (W/RINGS & ALUM PISTONS) (AC–DELCO #24204496)	3–E15,6
97–01	Y 4–SPD A/TRANS (M30) ...	24214343	1	19.95	PISTON KIT, 1–2 ACCUM (INCL 1–2 PLASTIC PISTON & 3–4 ALUM PISTON) (AC–DELCO #24214343)	3–E15,6
01–02	Y 4–SPD A/TRANS (M30) ...	24221919	1		PISTON KIT, 1–2 ACCUM (INCLS 1 1/2 & 1 3/4 ACCUM PSTN & SEAL ASM)	3–E15,6
97–02	Y 4–SPD A/TRANS (M30) ...	8642079	1	37.25	PISTON KIT, 2–4 BAND SERVO 2ND APPLY (YELLOW) (.74) (AC–DELCO #8642079)	3–E15,8
97–02	Y 4–SPD A/TRANS (M30) ...	24200126	1	8.85	PISTON, FWD CLU ACCUM (AC–DELCO #24200126)	3–E24,354
97–02	Y 4–SPD A/TRANS (M30) ...	8642478	1	27.75	PISTON, 2–4 BAND SERVO 4TH APPLY (W/RING) (AC–DELCO #8642478)	3–E15,25
97–98	Y 4–SPD A/TRANS (M30) ...	8663608	1	9.75	PISTON, 3–4 ACCUM (AC–DELCO #8663608)	3–E15,44

cardiagn.com

4.228 ACCUMULATOR – COVER – HOUSING – PIN – PISTON – PISTON KIT – RING – VALVE, Transmission Servo & Accumulator (Con't)

97–02	Y 4–SPD A/TRANS (M30) ...	8642124	1	8.85	RING, 2–4 BAND SERVO CVR RET (AC–DELCO #8642124)	3–E15,29
97–02	Y 4–SPD A/TRANS (M30) ...	8634400	1	5.55	VALVE, 3RD ACCUM BALL CHK (AC–DELCO #8634400)	3–E15,40

4.229 PIN – RING – RING KIT – SEAL, Transmission Servo & Accumulator

97–02	Y 4–SPD A/TRANS (M30) ...	8654581	1	4.55	PIN, 2–4 BAND ANC (AC–DELCO #8654581)	3–E15,41
97–02	Y 4–SPD A/TRANS (M30) ...	8642924	1	4.55	RING KIT, 2–4 BAND SERVO 2ND APPL PSTN FLUID SEAL (.55 RATIO) (INCLS INR & OTR RING) (AC–DELCO #8642924)	3–E15,5
97–02	Y 4–SPD A/TRANS (M30) ...	8642925	1	4.55	RING KIT, 2–4 BAND SERVO 2ND APPL PSTN FLUID SEAL (.74 RATIO) (INCLS 2 RINGS) (AC–DELCO #8642925)	3–E15,5
97	Y 4–SPD A/TRANS (M30) ...	8680653	1	4.53	RING, FWD CLU ACCUM PSTN FLUID SEAL (AC–DELCO #8680653)	3–E24,353
98–02	Y 4–SPD A/TRANS (M30) ...	24206508	1	4.53	RING, FWD CLU ACCUM PSTN FLUID SEAL (AC–DELCO #24206508)	3–E24,353
97–02	Y 4–SPD A/TRANS (M30) ...	24206509	1	4.55	RING, 1–2 ACCUM PSTN FLUID SEAL (AC–DELCO #24206509) .	3–E15,45
97–02	Y 4–SPD A/TRANS (M30) ...	8642480	1	4.55	RING, 2–4 BAND SERVO PSTN FLUID SEAL (AC–DELCO #8642480)	3–E15,26
97–02	Y 4–SPD A/TRANS (M30) ...	24206509	1	4.55	RING, 3–4 ACCUM PSTN FLUID SEAL (AC–DELCO #24206509) .	3–E15,45
97–02	Y 4–SPD A/TRANS (M30) ...	8647351	1	4.55	SEAL, 2–4 BAND SERVO CVR (O RING) (AC–DELCO #8647351)	3–E15,27
97–99	Y 4–SPD A/TRANS (M30) ...	8642112	1	4.55	SEAL, 2–4 BAND SERVO 2ND APPL PSTN HSG (O RING) (AC–DELCO #8642112)	3–E15,21
00–02	Y 4–SPD A/TRANS (M30) ...	24208661	1	4.55	SEAL, 2–4 BAND SERVO 2ND APPL PSTN HSG (O RING) (AC–DELCO #24208661)	3–E15,21

4.233 RETAINER – SPRING – WASHER, Transmission Servo & Accumulator

97–02	Y 4–SPD A/TRANS (M30) ...	8642416	1	4.55	RETAINER, 2–4 BAND SERVO CUSH SPR (AC–DELCO #8642416)	3–E15,15
97–02	Y 4–SPD A/TRANS (M30) ...	24208765	1	5.55	SPRING, FWD CLU ACCUM PSTN (AC–DELCO #24208765)	3–E24,356
97–98	Y 4–SPD A/TRANS (M30) ...	8685655	1	4.55	SPRING, 1–2 ACCUM PSTN (ORANGE) (INNER) (AC–DELCO #8685655)	3–E15,104
97–98	Y 4–SPD A/TRANS (M30) ...	24212030	1	4.55	SPRING, 1–2 ACCUM PSTN (AC–DELCO #24212030)	3–E15,54
99–01	Y 4–SPD A/TRANS (M30) ...	8685656	1	4.55	SPRING, 1–2 ACCUM PSTN (PINK) (INNER) (AC–DELCO #8685656)	3–E15,104
99–01	Y 4–SPD A/TRANS (M30) ...	24209794	1	4.53	SPRING, 1–2 ACCUM PSTN (VIOLET) (OTR) (AC–DELCO #24209794)	3–E15,54
02	Y 4–SPD A/TRANS (M30) ...	24220146	1		SPRING, 1–2 ACCUM PSTN INR (AC–DELCO #24220146)	3–E15,104
02	Y 5.7G (LS1), 4–SPD A/TRANS (M30)	24219942	1		SPRING, 1–2 ACCUM PSTN OTR (AC–DELCO #24219942)	3–E15,54

cardiagn.com

4.233 RETAINER – SPRING – WASHER, Transmission Servo & Accumulator (Con't)

97–02	Y 4–SPD A/TRANS (M30) ...	8642539	1	4.53	SPRING, 2–4 BAND SERVO PSTN CUSH (PINK) (AC–DELCO #8642539)	3–E15,16
97–02	Y 4–SPD A/TRANS (M30) ...	8681195	1	6.80	SPRING, 2–4 BAND SERVO PSTN CUSH INR (AC–DELCO #8681195)	3–E15,105
97–02	Y 4–SPD A/TRANS (M30) . .	8642273	1	4.53	SPRING, 2–4 BAND SERVO RTN (ORANGE) (AC–DELCO #8642273)	3–E15,12
97–98	Y 4–SPD A/TRANS (M30) ...	8639074	1	8.43	SPRING, 3–4 ACCUM PSTN (BLUE) (AC–DELCO #8639074) .	3–E15,46
97–02	Y 4–SPD A/TRANS (M30) ...	8642107	1	4.55	WASHER, 2–4 BAND SERVO PIN (3/8) (AC–DELCO #8642107) .	3–E15,23

4.241 BOLT, Transmission Rear Servo Accumulator

97–02	Y 4–SPD A/TRANS (M30) ...	8680764	3	*1.85	BOLT, FWD CLU ACCUM CVR (M6X1X17.7) (04.265) (AC–DELCO #8680764)	3–E24,364

4.246 PIN – SPRING, Transmission Rear Servo Piston

97–02	Y 4–SPD A/TRANS (M30) ...	8680499	1	16.45	PIN, 2–4 BAND SERVO PSTN (I.D BY 1 GROOVE IN TAPPERED POINT) (04.228) (AC–DELCO #8680499)	3–E15,13
97–02	Y 4–SPD A/TRANS (M30) ...	8680500	1	17.60	PIN, 2–4 BAND SERVO PSTN (I.D BY 2 GROOVES IN TAPERED POINT) (04.228) (AC–DELCO #8680500)	3–E15,13
97–02	Y 4–SPD A/TRANS (M30) ...	8680501	1	17.60	PIN, 2–4 BAND SERVO PSTN (I.D BY NO GROOVES IN TAPPERED POINT) (04.228) (AC–DELCO #8680501)	3–E15,13
97–02	Y 4–SPD A/TRANS (M30) ...	24207758	1	4.53	SPRING, 2–4 BAND SERVO PSTN (AC–DELCO #24207758)	3–E15,22

4.251 BAND, Transmission Brake

97–02	Y 4–SPD A/TRANS (M30) ...	24201131	1	23.05	BAND, 2–4 (AC–DELCO #24201131)	3–E6,602

4.262 RING – RIVET – SPRING – STOP – VALVE, Transmission Control Valve

97	Y 4–SPD A/TRANS (M30) ...	274267	1	4.53	RING, TCC VLV STOP RET (TO PUMP) (08.934) (AC–DELCO #274267)	
97–02	Y 4–SPD A/TRANS (M30) ...	8642619	1	4.55	RIVET, PRESS RLF BALL VLV SPR (04.216) (AC–DELCO #8642619)	3–F2,227
97–02	Y 4–SPD A/TRANS (M30) ...	8680684	1	4.53	SPRING, PRESS REG VLV INR (AC–DELCO #8680684)	3–F2,218
97–02	Y 4–SPD A/TRANS (M30) ...	8680682	1	4.55	SPRING, PRESS REG VLV OTR (04.216) (AC–DELCO #8680682)	3–F2,217
97–02	Y 4–SPD A/TRANS (M30) ...	8634705	1	4.55	STOP, TCC VLV (04.216) (AC–DELCO #8634705)	3–F2,223
97–02	Y 4–SPD A/TRANS (M30) ..	8684049	1	7.60	VALVE, PRESS REG (04.216) (AC–DELCO #8684049)	3–F2,216

cardiagn.com

4.265 BOLT – CLAMP – CONNECTOR – FILTER – GASKET KIT – PIN – PLATE – RETAINER – RING – SPRING – SWITCH – VALVE – VALVE KIT, Transmission Main Control Valve Body

97–02	Y 4–SPD A/TRANS (M30) ...	8680764	1	*1.85	BOLT, A/TRNS FLUID PRESS MAN VLV POSN SW (M6X1X17.7) (AC–DELCO #8680764)	3–E15,70
97–02	Y 4–SPD A/TRANS (M30) ...	8680764	1	*1.85	BOLT, PRESS CONT SOL VLV CLA (M6X1X17.7) (AC–DELCO #8680764)	3–E15,70
97–02	Y 4–SPD A/TRANS (M30) ...	8680741	3	*1.85	BOLT, VLV BODY (M6X1X54.4) (AC–DELCO #8680741)	3–E15,62
97–02	Y 4–SPD A/TRANS (M30) ...	8680742	9	*1.85	BOLT, VLV BODY (M6X1X47.5) (AC–DELCO #8680742)	3–E15,62
97–02	Y 4–SPD A/TRANS (M30) ...	11503870	2	*1.87	BOLT, VLV BODY (M6X1X35) (08.900) (AC–DELCO #11503870)	3–E15,62
97–02	Y 4–SPD A/TRANS (M30) ...	11506078	3	3.33	BOLT, VLV BODY (M6X1X65) (08.900)	3–E15,62
97–02	Y 4–SPD A/TRANS (M30) ...	8682007	1	4.53	CLAMP, PRESS CONT SOL VLV (AC–DELCO #8682007)	3–E24,378
97	Y 4–SPD A/TRANS (M30) ...	12162201	1	.58	CONNECTOR, SOL–B SHFT VLV (NATURAL) (2–WAY F) (W/O LEADS) (02.530)	
97	Y 4–SPD A/TRANS (M30) ...	12146800	1	.87	CONNECTOR, SOL–PRESS C/VLV (2–WAY F, W/O LEADS) (02.530)	
97	Y	12162213	1	4.55	CONNECTOR, SW–A/TRNS FLUID PRESS MAN VLV POSN (NATURAL) (5–WAY F) (W/O LEADS)	
97	Y 4–SPD A/TRANS (M30) ...	8683768	1	*1.85	FILTER, PRESS CONT SOL VLV FLUID (AC–DELCO #8683768)	3–E15,50
98–02	Y 4–SPD A/TRANS (M30) ...	24209145	1	4.55	FILTER, PRESS CONT SOL VLV FLUID (AC–DELCO #24209145)	3–E15,50
98–02	Y 4–SPD A/TRANS (M30) ...	24209144	1	4.55	FILTER, SHFT SOL VLV FLUID (AC–DELCO #24209144)	3–E15,49
97–00	Y 4–SPD A/TRANS (M30) ...	8685951	1	6.80	GASKET KIT, C/VLV BODY SPCR PLT (AC–DELCO #8685951) ..	3–E15,4
01–02	Y 4–SPD A/TRANS (M30) ...	24221350	1	5.95	GASKET KIT, C/VLV BODY SPCR PLT (AC–DELCO #24221350) .	3–E15,4
97–02	Y 4–SPD A/TRANS (M30) ...	8680765	1	4.55	PIN, REV ABUSE VLV BORE PLUG (AC–DELCO #8680765)	3–E24,360
97–02	Y 4–SPD A/TRANS (M30) ...	8680765	1	4.55	PIN, 1–2 ACCUM VLV BORE PLUG (AC–DELCO #8680765)	3–E24,360
97–00	Y 4–SPD A/TRANS (M30) ...	24203953	1	14.10	PLATE, C/VLV BODY SPCR (AC–DELCO #24203953)	3–E15,48
01	Y 4–SPD A/TRANS (M30) ...	24203953	1	14.10	PLATE, C/VLV BODY SPCR (BUILT ON JULIAN DATE 00–352 & PRIOR) (AC–DELCO #24203953)	3–E15,48
01–02	Y 4–SPD A/TRANS (M30) ...	24218161	1		PLATE, C/VLV BODY SPCR (BUILT ON JULIAN DATE 00–353 & FUTURE) (AC–DELCO #24218161)	3–E15,48
97–02	Y 4–SPD A/TRANS (M30) ...	8680781	1	4.55	RETAINER, ACTR FEED LIM VLV BORE PLUG (AC–DELCO #8680781)	3–E24,395
97–02	Y 4–SPD A/TRANS (M30) ...	8680781	1	4.55	RETAINER, TCC PWM SOL VLV (AC–DELCO #8680781)	3–E24,395
97–02	Y 4–SPD A/TRANS (M30) ...	8680781	1	4.55	RETAINER, TCC SIG VLV BORE PLUG (AC–DELCO #8680781)	3–E24,395
97–02	Y 4–SPD A/TRANS (M30) ...	8680781	1	4.55	RETAINER, 1–2, 3–4 SHFT SOL VLV (AC–DELCO #8680781) ..	3–E24,395

cardiagn.com

4.265 BOLT – CLAMP – CONNECTOR – FILTER – GASKET KIT – PIN – PLATE – RETAINER – RING – SPRING – SWITCH – VALVE - VALVE KIT, Transmission Main Control Valve Body (Con't)

97–02	Y 4–SPD A/TRANS (M30) ...	8680781	1	4.55	RETAINER, 2–3 SHFT SOL VLV (AC–DELCO #8680781)	3–E24,395
97–01	Y 4–SPD A/TRANS (M30) ...	8680781	1	4.55	RETAINER, 3–2 C/VLV BORE PLUG (AC–DELCO #8680781)	3–E24,395
97–02	Y 4–SPD A/TRANS (M30) ...	8680781	1	4.55	RETAINER, 3–2 DNSHFT VLV BORE PLUG (AC–DELCO #8680781)	3–E24,395
97–02	Y 4–SPD A/TRANS (M30) ...	8680781	1	4.55	RETAINER, 3–2 SHFT SOL VLV (AC–DELCO #868078)	3–E24,395
97–02	Y 4–SPD A/TRANS (M30) ...	8680781	1	4.55	RETAINER, 3–4 RLY VLV BORE PLUG (AC–DELCO #8680781)	3–E24,395
97–02	Y 4–SPD A/TRANS (M30) ...	8680781	1	4.55	RETAINER, 3–4 SHFT VLV BORE PLUG (AC–DELCO #8680781)	3–E24,395
97–02	Y 4–SPD A/TRANS (M30) ...	11503348	1	4.55	RING, T/V BOOST VLV BUSH RET (04.216) (AC–DELCO #11503348)	3–F2,221
97–02	Y 4–SPD A/TRANS (M30) ...	8634106	1	5.00	SPRING, PRESS RLF BALL VLV (AC–DELCO #8634106)	3–F2,229
97–02	Y 4–SPD A/TRANS (M30) ...	24201610	1	4.55	SPRING, TCC VLV INR (04.216) (AC–DELCO #24201610)	3–F2,225
97–02	Y 4–SPD A/TRANS (M30) ...	24201611	1	4.55	SPRING, TCC VLV OTR (04.216) (AC–DELCO #24201611)	3–F2,226
97–02	Y 4–SPD A/TRANS (M30) ...	24215111	1	46.50	SWITCH, A/TRNS FLUID PRESS MAN VLV POSN (W/PLASTIC COVER) (AC–DELCO #24215111)	3–E15,69
01	Y 4–SPD A/TRANS (M30) ...	24221158	1	342.00	VALVE KIT, CONT (W/BODY & VLV) (REMAN) (INCLUDES 1–REMAN VLV BODY, 1–SPCR PLT, & 2–SPCR PLT GASKETS) (AC–DELCO #24221158)	
97	Y 4–SPD A/TRANS (M30) ...	24216254	1	70.25	VALVE KIT, PRESS CONT SOL (W/SHFT SOL VLV FLUID FLTR) (AC–DELCO #24216254)	3–E15,9
97–02	Y 4–SPD A/TRANS (M30) ...	24200372	1	20.70	VALVE KIT, REV BOOST (AC–DELCO #24200372)	3–F2,4
97–99	Y 4–SPD A/TRANS (M30) ...	24214880	1	618.00	VALVE, CONT (W/BODY & VLV) (REMAN) (AC–DELCO #24214880)	3–E15,60
00	Y 4–SPD A/TRANS (M30) ..	24210317	1	437.00	VALVE, CONT (W/BODY & VLV) (AC–DELCO #24210317)	3–E15,60
01–02	Y 4–SPD A/TRANS (M30) ...	24218186	1	278.00	VALVE, CONT (W/BODY & VLV) (BUILT ON JULIAN DATE 01–032 & FUTURE) (AC–DELCO #24218186)	3–E15,60
98–00	Y 4–SPD A/TRANS (M30) ...	24209276	1	56.00	VALVE, PRESS CONT SOL (AC–DELCO #24209276)	3–E15,377
01–02	Y 4–SPD A/TRANS (M30) ...	24220158	1	56.00	VALVE, PRESS CONT SOL (AC–DELCO #24220158)	3–E15,377
97–02	Y 4–SPD A/TRANS (M30) ...	24205509	1	12.10	VALVE, TCC (AC–DELCO #24205509)	3–F2,224
97–99	Y 4–SPD A/TRANS (M30) ...	24212690	1	39.50	VALVE, TCC PWM SOL (PWM) (04.122) (AC–DELCO #24212690)	3–E24,396
00–02	Y 4–SPD A/TRANS (M30) ...	24212690	1	39.50	VALVE, TCC PWM SOL (PWM) (04.122) (AC–DELCO #24212690)	3–E24,396

cardiagn.com

4.265 BOLT – CLAMP – CONNECTOR – FILTER – GASKET KIT – PIN – PLATE – RETAINER – RING – SPRING – SWITCH – VALVE – VALVE KIT, Transmission Main Control Valve Body (Con't)

97–02	Y 4–SPD A/TRANS (M30) ...	10478131	1	25.25	VALVE, 1–2, 3–4 SHFT SOL (INCLS SEAL) (AC–DELCO #10478131)	3–E24,367
97–02	Y 4–SPD A/TRANS (M30) ...	10478131	1	25.25	VALVE, 2–3 SHFT SOL (INCLS SEAL) (AC–DELCO #10478131)	3–E24,367
97–02	Y 4–SPD A/TRANS (M30) ...	24212327	1	27.75	VALVE, 3–2 SHFT SOL (04.122) (AC–DELCO #24212327)	3–E24,394

4.275 DETENT – LINK – NUT – RETAINER, Transmission Throttle Valve

97–02	Y 4–SPD A/TRANS (M30) ...	8642247	1	4.60	DETENT, MAN SHFT (AC–DELCO #8642247)	3–E15,63
97–02	Y 4–SPD A/TRANS (M30) ...	8680731	1	4.55	LINK, MAN VLV (AC–DELCO #8680731)	3–E15,89
97–02	Y 4–SPD A/TRANS (M30) ...	8648178	1	4.5[illegible]	NUT, MAN SHFT DTNT LVR (M10X15.6H THD) (AC–DELCO #8648178)	3–E15,90
97–02	Y 4–SPD A/TRANS (M30) ...	8642246	1	4.55	RETAINER, MAN SHFT SHF (AC–DELCO #8642246)	3–E15,83

4.279 LEVER – VALVE, Transmission Detent

97–02	Y 4–SPD A/TRANS (M30) ...	24200486	1	4.55	LEVER, MAN SHFT DTNT (AC–DELCO #24200486)	3–E15,88
97–02	Y 4–SPD A/TRANS (M30) ...	24203484	1	16.45	VALVE, MAN (04.265) (AC–DELCO #24203484)	3–E24,340

4.282 SEAL, Transmission Manual Shaft

97–02	Y 4–SPD A/TRANS (M30) ...	8657163	1	4.55	SEAL, MAN SHFT SHF (AC–DELCO #8657163)	3–E15,82

4.290 ACTUATOR – BRACKET, Transmission Park Lock

97–02	Y 4–SPD A/TRANS (M30) ...	8667517	1	15.90	ACTUATOR, PARK PAWL (INCLS ACTUATOR, ROD & SPRINGS) (AC–DELCO #8667517)	3–E15,85
97–02	Y 4–SPD A/TRANS (M30) ...	8667574	1	12.40	BRACKET, PARK PAWL ACTR (AC–DELCO #8667574)	3–E15,86

4.293 PIN, Transmission Manual Detent

97–02	Y 4–SPD A/TRANS (M30) ...	6261174	1	4.53	PIN, MAN SHFT DTNT RLR (04.311) (AC–DELCO #6261174)	

4.294 PAWL KIT – PLUG – SHAFT KIT, Transmission Park Lock

97–02	Y 4–SPD A/TRANS (M30) ...	8669911	1	13.80	PAWL KIT, PARK (INST SHT, PAWL, PLUG & SHF) (AC–DELCO #3669911)	3–E15,79
97–02	Y 4–SPD A/TRANS (M30) ...	8620318	1	*3.40	PLUG, PARK PAWL SHF HOLE (9.65MM DIA STEEL) (.38 DIA) (AC–DELCO #8620318)	3–E15,78
97–02	Y 4–SPD A/TRANS (M30) ...	24210711	1	17.60	SHAFT KIT, MAN SHFT (128.2MM) (LONG) (INCLS SEAL) (AC–DELCO #24210711) ...	3–E15,84
97–02	Y 4–SPD A/TRANS (M30) ...	24210712	1	17.60	SHAFT KIT, MAN SHFT (SHORT) (INCLS SEAL, INDIVIDUAL COMPONENT NOT SOLD SEPARATELY) (AC–DELCO #24210712)	3–E15,84

cardiagn.com

4.295 SPRING, Transmission Park Lock

97–02	Y 4–SPD A/TRANS (M30) ...	8642193	1	4.53	SPRING, PARK PAWL (AC–DELCO #8642193)	3–E15,80

4.317 STUD, Transmission Case Extension

97–02	Y	24207599	1	4.55	STUD, A/TRNS CASE EXTN (AC–DELCO #24207599)	3–E15,100

4.318 SEAL, Transmission Extension

97	Y 4–SPD A/TRANS (M30) ...	1358899	1	*1.85	SEAL, A/TRNS CASE EXTN (AC–DELCO #1358899)	3–E15,30
98–02	Y 4–SPD A/TRANS (M30) ...	24208660	1	4.55	SEAL, A/TRNS CASE EXTN (AC–DELCO #24208660)	3–E15,30
97–98	Y 4–SPD A/TRANS (M30) ...	24201470	1	10.95	SEAL, PROP SHF FRT SLIP YOKE OIL (BOOTED) (AC–DELCO #24201470)	
00–01	Y 4–SPD A/TRANS (M30) ...	8673526	1	10.95	SEAL, PROP SHF FRT SLIP YOKE OIL (NON BOOTED) (AC–DELCO #8673526)	

4.319 BOLT – BUSHING, Transmission Case Extension

97–02	Y 4–SPD A/TRANS (M30) ...	8680874	3	4.55	BOLT, A/TRNS CASE EXTN (M10X1.5X33.4) (04.265)	
97–98	Y 4–SPD A/TRANS (M30) ...	8642181	2	4.55	BUSHING, OUTPUT SHF (FRT & RR) (04.159) (AC–DELCO #8642181)	3–E6,659
99–02	Y 4–SPD A/TRANS (M30) ...	8642181	2	4.55	BUSHING, OUTPUT SHF (FRT & RR) (04.159) (AC–DELCO #8642181)	3–E6,659

4.329 BOLT – SENSOR, Speedometer Drive

97–01	Y	12369459	1	4.53	BOLT, VEH SPD SEN (AC–DELCO #12369459)	3–E15,35
02	Y 5.7G (LS1), 4–SPD A/TRANS (M30), 6–SPD M/TRANS (MM6), 2.73R (GU2), 3.42R (GU6), 3.15R (G90)	12369459	1	4.53	BOLT, VEH SPD SEN (AC–DELCO #12369459)	3–E15,35
02	YY 5.7S (LS6), MANUAL 6 SPD O/D TRANS, TREMEC (M12), 3.42R (GU6)	12369459	1	4.53	BOLT, VEH SPD SEN (AC–DELCO #12369459)	3–E15,35
02	YY37 5.7S (LS6), MANUAL 6 SPD O/D TRANS, TREMEC (M12), 3.42R (GU6)	12369459	7	4.53	BOLT, VEH SPD SEN (AC–DELCO #12369459)	3–E15,35
97–01	Y	12369458	1	37.70	SENSOR, VEH SPD (AC–DELCO #213–344)	3–E15,36
02	Y 5.7G (LS1), 4–SPD A/TRANS (M30), 6–SPD M/TRANS (MM6), 2.73R (GU2), 3.42R (GU6), 3.15R (G90)	12369458	1	37.70	SENSOR, VEH SPD (AC–DELCO #213–344)	3–E15,36
02	Y37 5.7S (LS6), MANUAL 6 SPD O/D TRANS, TREMEC (M12), 3.42R (GU6)	12369458	1	37.70	SENSOR, VEH SPD (AC–DELCO #213–344)	3–E15,36

4.338 SEAL, Speedometer Driven Gear

97–98	Y 4–SPD A/TRANS (M30) ...	15552872	1	*1.85	SEAL, VEH SPD SEN (O RING) (TEFLON) (AC–DELCO #15552872)	

cardiagn.com

MICROFICHE INDEX

GROUPS 4.000 THRU 5.000

FICHE 3 OF 7

GROUP	DESCRIPTION	STARTING GRID LOCATION PARTS	ILLUSTRATIONS
.	GENERAL INFORMATION	1-A2	1-G2
	ALPHABETICAL INDEX	1-B6	N.A.
4 000	AUTOMATIC TRANSMISSION	3-A2	3-E2
4 000	BRAKES	3-C2	3-G2
5 000	BRAKES - REAR AXLE - PROPELLER SHAFT - WHEELS	3-D2	3-J2
.	OUT OF FICHE CALLS	N.A.	3-M23

cardiagn.com

3-B1

4.355 BEARING, Transmission Main Drive Gear (Ball)

01-02	YY37 MANUAL 6 SPD O/D TRANS, TREMEC (M12)	88894051	1	32.50	BEARING, MAIN DRV GR	2-L12,9

cardiagn.com

4.589 CONNECTOR, Parking Brake Indicator

98	Y	12102561	1	11.89	CONNECTOR, SW-PARK BRK (1-WAY F, W/LEADS) (02.535) (AC-DELCO #PT230)	
00	Y	12102561	1	11.89	CONNECTOR, SW-PARK BRK (1-WAY F, W/LEADS) (02.535) (AC-DELCO #PT230)	

4.591 BOLT – LEVER – PROTECTOR, Parking Brake Apply

97-99	Y	14081021	3	*1.29	BOLT, PARK BRK LVR (TORX HD 8X1.25X20) (08.913)	
97	Y	10438439	1	201.00	LEVER, PARK BRK	3-I7,17
98	Y (EXC INDY PACE CAR (Z4Z)	10438439	1	201.00	LEVER, PARK BRK	3-I7,17
98	Y67 INDY PACE CAR (Z4Z)	10298245	1	196.00	LEVER, PARK BRK	3-I7,17
99-02	Y	10438439	1	201.00	LEVER, PARK BRK	3-I7,17
97-02	Y	12530694	LH	17.45	PROTECTOR, PARK BRK LVR BOOT	3-I7,7
97-02	Y	12530695	RH	17.45	PROTECTOR, PARK BRK LVR BOOT	3-I7,7

4.612 BOOT, Parking Brake Apply Lever

97	Y	10278423	1	74.50	BOOT, PARK BRK LVR	3-I7,22
98	Y (EXC INDY PACE CAR (Z4Z)	10278423	1	74.50	BOOT, PARK BRK LVR	3-I7,22
98	Y67 INDY PACE CAR (Z4Z)	10298246	1	74.50	BOOT, PARK BRK LVR	3-I7,22
99	Y	10298088	1	74.50	BOOT, PARK BRK LVR	3-I7,22
00-02	Y	10278423	1	74.50	BOOT, PARK BRK LVR	3-I7,22

4.625 PEDAL, Brake

97-02	Y 4-SPD A/TRANS (M30)	10253660	1	106.00	PEDAL, BRK	3-H22,9
97-00	Y 6-SPD M/TRANS (MM6)	10262012	1	106.00	PEDAL, BRK	3-H22,9
01-02	Y 6-SPD M/TRANS (MM6), MANUAL 6 SPD O/D TRANS, TREMEC (M12)	10262012	1	106.00	PEDAL, BRK	3-H22,9

4.626 BUSHING, Brake Pedal

97-02	Y	15594358	2	*.76	BUSHING, BRK PED PIV (00.831)	3-H22,11

4.634 BOLT – NUT – PIN, Brake Pedal

97-02	Y	11508540	1	*.74	BOLT, BRK PED PIV (M10X1.5X75 10.9ZOR) (08.900)	
97	Y	10255857	1	*1.80	NUT, BRK PED PIV (M10X1.5 FLANGED HEX HEAD) (08.917)	
97-02	Y	11516077	1	3.33	NUT, BRK PED PIV (M10X1.5, 11.7) (08.917)	
97-02	Y	10401285	1	5.70	PIN, BRK PED PUSH ROD	3-H22,10

4.649 CYLINDER KIT, Brake Master Cylinder

97	Y	18029859	1	47.00	CYLINDER KIT, BRK MAS (AC-DELCO #175-431)	3-H16,2
98-02	Y	18026279	1	72.00	CYLINDER KIT, BRK MAS (04.650) (AC-DELCO #175-433)	3-H16,2

cardiagn.com

4.650 CYLINDER, Brake Master

97	Y	18029860	1	493.00	CYLINDER, BRK MAS (AC-DELCO #174-743)	3-G25,3
98-02	Y	18026278	1	493.00	CYLINDER, BRK MAS (AC-DELCO #174-747)	3-G25,3

4.651 CAP – CONNECTOR – RESERVOIR KIT – SWITCH, Brake Master Cylinder Reservoir

97-02	Y	18060186	1	20.35	CAP, BRK M/CYL RSVR	3-H16,2
97-02	Y ACTIVE BRAKE CTL (JL4)	12101899	1	18.52	CONNECTOR, SW-BRK FLUID LVL IND (BLACK) (2-WAY F W/LEADS) (02.383) (AC-DELCO #PT169)	
97-02	Y	18029858	1	54.00	RESERVOIR KIT, BRK M/CYL (W/GROM)	3-H16,5
97-02	Y	18029973	1	9.15	SWITCH, BRK FLUID LVL IND	3-H16,1

4.652 VALVE, Brake Master Cylinder Proportioning

97-98	Y	10279616	1	54.25	VALVE, BRK PROPN RR	3-G25,37
99-00	Y (EXC ACTIVE BRAKE CTL (JL4)	10279616	1	54.25	VALVE, BRK PROPN RR	3-G25,37

4.653 PISTON, Brake Master Cylinder Secondary

97	Y	18029857	1	21.35	PISTON, BRK M/CYL SECD	3-H16,13
98-02	Y	18026280	1	12.55	PISTON, BRK M/CYL SECD	3-H16,13

4.662 NUT – RETAINER, Brake Master Cylinder Adjusting

97-01	Y	25664438	2	3.33	NUT, BRK M/CYL (M10X1.5X11)	3-H22,15
02	Y	25664438	2	3.33	NUT, BRK M/CYL (M10X1.5X11)	3-H22,15
97-02	Y	3817880	1	*1.05	RETAINER, BRK PED PUSH ROD	3-H22,8

4.663 CONNECTOR, Brake Pressure Warning

98-00	Y	12101857	1	19.28	CONNECTOR, SW-BRK PRESS DIFF (WHITE) (2-WAY F, W/LEADS) (02.535) (AC-DELCO #PT249)	3-G9,34

4.665 BOLT – BOOT – BRACKET – DUCT – HARDWARE KIT – PIN – SCOOP – SEAL – WASHER, Wheel Brake Cylinder/Caliper

97-02	Y	14084051	4	4.98	BOLT, FRT BRK CLPR (M14X2X47)	3-G25,42
97-02	Y	14067559	4	1.25	BOLT, FRT BRK CLPR GDE PIN	3-H18,2
97-98	Y	14067559	8	1.25	BOLT, RR BRK CLPR (GDE PIN)	3-H18,2
97-02	Y	14084051	4	4.98	BOLT, RR BRK CLPR (M14X2X47)	3-G25,42
97-02	Y	12530703	2	5.33	BOOT, RR BRK CLPR GDE PIN (REPCO LTD) (STMPD WITH A DOT OF ORANGE PAINT) (AC-DELCO #179-2008)	3-H20,7
97-02	Y	12455799	2	39.75	BRACKET, FRT BRK CLPR STOP	3-H18,9
97	Y	10112652	2	39.75	BRACKET, RR BRK CLPR	
97-98	Y	12455800	2	39.75	BRACKET, RR CLPR STOP	3-H20,10
99-02	Y	12455800	2	39.75	BRACKET, RR CLPR STOP	3-H20,10
97-02	Y	10295976	LH	21.35	DUCT, FRT BRK CLPR CLG (POSN #1)	3-G4,1
97-02	Y	10295977	RH	21.35	DUCT, FRT BRK CLPR CLG (POSN #2)	3-G4,1
01-02	Y37 ANTILOCK DISC BRK (JL9)	10425976	LH		DUCT, RR BRK CLPR CLG	3-G4,4

© 2001 GENERAL MOTORS SERVICE PARTS OPERATIONS-CHEVROLET-15Y

cardiagn.com

4.665 BOLT – BOOT – BRACKET – DUCT – HARDWARE KIT – PIN – SCOOP – SEAL – WASHER, Wheel Brake Cylinder/Caliper (Con't)

01–02	Y37 ANTILOCK DISC BRK (JL9)	10425977	RH		DUCT, RR BRK CLPR CLG (04.655)	3–G4,4
97–98	Y	18039815	1	25.90	HARDWARE KIT, FRT BRK CLPR MTG (AC–DELCO #18K981) (DURASTOP)	
97–98	Y	18039815	1	25.90	HARDWARE KIT, RR BRK CLPR MTG (AC–DELCO #18K980) (DURASTOP)	
97–02	Y	12530697	2	6.20	PIN, FRT BRK CLPR GDE (AC–DELCO #179–2009)	3–H18,5
97–02	Y	12530698	2	7.90	PIN, RR BRK CLPR GDE (REPCO LTD) (STMPD WITH A DOT OF ORANGE PAINT) (AC–DELCO #179–2011)	3–H20,6
01–02	Y37	10440858	RH	73.50	SCOOP, RR BRK CLPR CLG AIR	3–G4,3
01–02	Y37	10440860	LH	73.50	SCOOP, RR BRK CLPR CLG AIR	3–G4,3
97–02	Y	12530703	2	5.33	SEAL, FRT BRK CLPR GDE PIN (REPCO LTD) (STMPD WITH A DOT OF ORANGE PAINT) (AC–DELCO #179–2008)	3–H20,7
97–02	Y	14080254	4	3.33	WASHER, FRT BRK CLPR (28MM OD X 15.75MM ID)	3–G25,43
97–02	Y	14080254	4	3.33	WASHER, RR BRK CLPR (28MM OD X 15.75MM ID)	3–G25,43

4.666 CAP – VALVE, Wheel Brake Cylinder/Caliper Bleed

97–02	Y	14089150	4	3.50	CAP, FRT BRK CLPR BLEDR VLV (REPCO LTD) (STMPD WITH A DOT OF ORANGE PAINT)	3–H18,4
97–02	Y	14089150	4	3.50	CAP, RR BRK BLEDR VLV (REPCO LTD) (STMPD WITH A DOT OF ORANGE PAINT)	3–H18,4
97–02	Y	14071826	4	2.40	VALVE, FRT BRK CLPR BLEDR	3–H18,3
97–02	Y	14071826	2	2.40	VALVE, RR BRK CLPR BLEDR	3–H18,3

4.667 CALIPER KIT – REPAIR KIT – SEAL, Wheel Brake Cylinder/Caliper Piston

97–00	Y	12530682	RH	158.00	CALIPER KIT, FRT BRK (AC–DELCO #172–2219)	3–G25,33
97–00	Y	12530683	LH	158.00	CALIPER KIT, FRT BRK (AC–DELCO #172–2220)	3–G25,33
01–02	Y07–67 ANTILOCK DISC BRK (JL9)	12530682	RH	158.00	CALIPER KIT, FRT BRK (AC–DELCO #172–2219)	3–G25,33
01–02	Y07–67 ANTILOCK DISC BRK (JL9)	12530683	LH	158.00	CALIPER KIT, FRT BRK (AC–DELCO #172–2220)	3–G25,33
01	Y37 ANTILOCK DISC BRK (JL9)	88895128	LH	158.00	CALIPER KIT, FRT BRK (AC–DELCO #172–2263)	3–H11,33
01	Y37 ANTILOCK DISC BRK (JL9)	88895129	RH	158.00	CALIPER KIT, FRT BRK (AC–DELCO #172–2264)	3–H11,33
02	Y ANTILOCK DISC BRK (JL9)	88895128	LH	158.00	CALIPER KIT, FRT BRK (AC–DELCO #172–2263)	3–H11,33
02	Y ANTILOCK DISC BRK (JL9)	88895129	RH	158.00	CALIPER KIT, FRT BRK (AC–DELCO #172–2264)	3–H11,33
97–00	Y	12530684	RH	115.00	CALIPER KIT, RR BRK (AC–DELCO #172–2221)	3–G25,21
97–00	Y	12530685	LH	115.00	CALIPER KIT, RR BRK (AC–DELCO #172–2222)	3–G25,21

cardiagn.com

4.667 CALIPER KIT – REPAIR KIT – SEAL, Wheel Brake Cylinder/Caliper Piston (Con't)

01	Y07–67 ANTILOCK DISC BRK (JL9)	12530684	RH	115.00	CALIPER KIT, RR BRK (AC–DELCO #172–2221)	3–G25,21
01	Y07–67 ANTILOCK DISC BRK (JL9)	12530685	LH	115.00	CALIPER KIT, RR BRK (AC–DELCO #172–2222)	3–G25,21
01–02	Y37 ANTILOCK DISC BRK (JL9)	88895130	LH	115.00	CALIPER KIT, RR BRK (AC–DELCO #172–2265)	3–H11,21
01–02	Y37 ANTILOCK DISC BRK (JL9)	88895131	RH	115.00	CALIPER KIT, RR BRK (AC–DELCO #172–2266)	3–H11,21
02	Y07–67 ANTILOCK DISC BRK (JL9), (EXC T2F (EXPORT)	12530684	RH	115.00	CALIPER KIT, RR BRK (AC–DELCO #172–2221)	3–G25,21
02	Y07–67 ANTILOCK DISC BRK (JL9), (EXC T2F (EXPORT)	12530685	LH	115.00	CALIPER KIT, RR BRK (AC–DELCO #172–2222)	3–G25,21
02	Y07–67 ANTILOCK DISC BRK (JL9), T2F (EXPORT)	88895130	LH	115.00	CALIPER KIT, RR BRK (AC–DELCO #172–2265)	3–H11,21
02	Y07–67 ANTILOCK DISC BRK (JL9), T2F (EXPORT)	88895131	RH	115.00	CALIPER KIT, RR BRK (AC–DELCO #172–2266)	3–H11,21
97–02	Y	12530686	2	16.65	REPAIR KIT, FRT BRK CLPR HYD	3–H18,2
97–02	Y	12530687	2	16.65	REPAIR KIT, RR BRK CLPR HYD	3–H20,2
97–02	Y	12530706	4	5.80	SEAL, FRT BRK CLPR PSTN	3–H18,7
99–02	Y	12530709	2	5.80	SEAL, RR BRK CLPR PSTN	3–H20,14
97–98	Y	12530709	2	5.80	SEAL, RR BRK CYL PSTN	3–H20,14

4.668 PISTON, Wheel Brake Cylinder or Caliper

97–02	Y	12530705	4	31.00	PISTON, FRT BRK CLPR (04.667) (AC–DELCO #179–2007)	3–H18,12
97–02	Y	12453509	2	29.50	PISTON, RR BRK CLPR (AC–DELCO #179–2010)	3–H20,12

4.670 BOOT, Wheel Brake Piston/Caliper

97–02	Y	12530704	2	7.05	BOOT, FRT BRK CLPR PSTN (04.668)	3–H18,13
97–02	Y	12530707	2	6.68	BOOT, RR BRK CLPR PSTN	3–H20,13

4.671 FITTING, Brake Hose

97–01	Y	22163795	2	3.50	FITTING, RR BRK HOSE (04.686)	3–G25,25
01–02	Y	11518571	2	3.33	FITTING, RR BRK HOSE (M10X1.0X27.5, 16.5 TH) (HX FLG (BANGO)) (04.686)	3–H11,25

4.680 HOSE, Hydraulic Brake

97	Y	22163399	2	36.75	HOSE, FRT BRK	3–G25,29
98–02	Y	22163727	2	28.25	HOSE, FRT BRK	3–G25,29
97–02	Y	22163402	2	33.00	HOSE, RR BRK	3–G25,23

4.681 BOLT – BRACKET – GASKET, Hydraulic Brake Hose

01–02	Y	11517342	2	3.33	BOLT, FRT BRK HOSE BRKT (BOLT–HEX W/FL WA, M6X1X20, 9.53 THD, 17 OD, 9.8, 6280M, MACH, P–PT) (03.452)	
01–02	Y	11517342	2	3.33	BOLT, RR BRK HOSE BRKT (BOLT–HEX W/FL WA, M6X1X20, 9.53 THD, 17 OD, 9.8, 6280M, MACH, P–PT) (03.452)	
97–02	Y	10281416	2	3.50	BRACKET, FRT BRK HOSE	3–G25,27

© 2001 GENERAL MOTORS SERVICE PARTS OPERATIONS–CHEVROLET–15Y

cardiagn.com

4.681 BOLT – BRACKET – GASKET, Hydraulic Brake Hose (Con't)

97–02	Y	10281416	2	3.50	BRACKET, RR BRK HOSE	3–G25,27
97–02	Y	21012386	4	*.64	GASKET, RR BRK HOSE FTG (10.3X14.5X1.61) (COPPER) (AC–DELCO #21012386)	3–G25,24

4.685 PIPE – SEAL, Hydraulic Brake

98	Y FRT ABS BRAKE LOC (JAG), (EXC ACTIVE BRAKE CTL (JL4)	10413370	1	29.50	PIPE, BRK PRESS MOD VLV M/CYL RSVR FRT	3–H2,59
99–00	Y (EXC ACTIVE BRAKE CTL (JL4)	10413370	1	29.50	PIPE, BRK PRESS MOD VLV M/CYL RSVR FRT	3–H2,59
01–02	Y	10444143	1	38.25	PIPE, BRK PRESS MOD VLV M/CYL RSVR FRT	3–H11,56
98	Y FRT ABS BRAKE LOC (JAG), (EXC ACTIVE BRAKE CTL (JL4)	10413369	1	26.50	PIPE, BRK PRESS MOD VLV M/CYL RSVR RR	3–H2,53
99–00	Y (EXC ACTIVE BRAKE CTL (JL4)	10413369	1	26.50	PIPE, BRK PRESS MOD VLV M/CYL RSVR RR	3–H2,53
01–02	Y	10444144	1	39.00	PIPE, BRK PRESS MOD VLV M/CYL RSVR RR	3–H11,53
98	Y	12547207	1	15.84	PIPE, FRT BRK (POSITION #2) (3/16" X 20 FT ROLL) (CUT TO LENGTH) (08.964)	
98	Y FRT ABS BRAKE LOC (JAG), ACTIVE BRAKE CTL (JL4)	10416131	1	35.50	PIPE, FRT BRK COMB VLV	3–H6,56
99–00	Y ACTIVE BRAKE CTL (JL4)	10416131	1	35.50	PIPE, FRT BRK COMB VLV	3–H6,56
98	Y FRT ABS BRAKE LOC (JAG), ACTIVE BRAKE CTL (JL4)	10290018	1	35.50	PIPE, RR BRK COMB VLV	3–H6,53
99–00	Y ACTIVE BRAKE CTL (JL4)	10290018	1	35.50	PIPE, RR BRK COMB VLV	3–H6,53
98	Y FRT ABS BRAKE LOC (JAG), ACTIVE BRAKE CTL (JL4)	10400741	1	3.50	SEAL, BRK PIPE (O RING)	

4.686 CLIP – FITTING – GASKET – NUT – PLATE – RETAINER – SEAL, Hydraulic Brake Pipe

97–98	Y	10276214	1	3.50	CLIP, FRT BRK C/OVR PIPE	3–G25,12
97	Y	10276215	3	3.50	CLIP, FRT BRK PIPE	3–G25,8
97–98	Y	10288895	2	3.50	CLIP, FRT BRK PIPE	3–G25,5
98	Y (EXC FRT ABS BRAKE LOC (JAG)	10276215	3	3.50	CLIP, FRT BRK PIPE	3–G25,8
98	Y FRT ABS BRAKE LOC (JAG)	10289872	2	3.33	CLIP, FRT BRK PIPE	3–H2,13
98	Y FRT ABS BRAKE LOC (JAG)	10289874	1	3.33	CLIP, FRT BRK PIPE (2 TUBE, SNAP–IN, XMAS TREE TYPE W/PRONG)	3–H2,12
99–02	Y	10289872	2	3.33	CLIP, FRT BRK PIPE (2 TUBE ADHESIVE BACKED)	3–H2,13
99–02	Y	10289874	1	3.33	CLIP, FRT BRK PIPE (2 TUBE, SNAP–IN, XMAS TREE TYPE W/PRONG)	3–H2,12
99–02	Y	10289907	1	3.50	CLIP, FRT BRK PIPE (3 TUBE, FLOAT)	3–H2,18
98	Y FRT ABS BRAKE LOC (JAG)	25607191	2	3.33	CLIP, RR BRK C/OVR PIPE (2 SLOT) (21.5X10.0MM)	3–H2,16
99–02	Y	25607191	2	3.33	CLIP, RR BRK C/OVR PIPE (2 SLOT) (21.5X10.0MM)	3–H2,16
97–98	Y	10288896	2	1.30	CLIP, RR BRK PIPE	3–G25,13

cardiagn.com

4.686 CLIP – FITTING – GASKET – NUT – PLATE – RETAINER – SEAL, Hydraulic Brake Pipe (Con't)

97–98	Y	25607720	1	8.30	FITTING, BRK PRESS MOD VLV INTER PIPE (FEMALE, M10X1)	
97–01	Y	22163795	2	3.50	FITTING, FRT BRK HOSE	3–G25,31
01–02	Y	11518571	2	3.33	FITTING, FRT BRK HOSE (M10X1.0X27.5, 16.5 TH) (HX FLG (BANGO))	3–H11,31
99–02	Y	14100427	1	3.33	FITTING, RR BRK C/OVR PIPE (HEX 5.00 TUBE M10X1) (03.163)	3–G25,2
98	Y FRT ABS BRAKE LOC (JAG)	14100427	1	3.33	FITTING, RR BRK PIPE (HEX 5.00 TUBE M10X1) (03.163)	3–G25,2
99–02	Y	14100427	1	3.33	FITTING, RR BRK PIPE (HEX 5.00 TUBE M10X1) (03.163)	3–G25,2
97–02	Y	21012386	4	*.64	GASKET, FRT BRK HOSE FTG (10.3X14.5X1.61) (COPPER) (04.681) (AC–DELCO #21012386)	3–G25,30
97–98	Y	14100427	1	3.33	NUT, FRT BRK PIPE (HEX 5.00 TUBE M10X1) (03.163)	3–G25,2
97–02	Y	10402723	1	3.33	PLATE, BRK PIPE CLIP ANC (03.162)	3–G25,10
98	Y FRT ABS BRAKE LOC (JAG)	10289673	1	15.30	RETAINER, BRK PIPE	3–H2,15
99–02	Y	10289673	1	15.30	RETAINER, BRK PIPE	3–H2,15
97–98	Y	10294712	1	3.50	RETAINER, FRT BRK PIPE	3–G25,41
97	Y	10294714	1	.28	RETAINER, RR BRK PIPE	
97–02	Y	10407022	2	4.75	RETAINER, RR BRK PIPE	3–G25,16
98–00	Y	10415038	1	3.45	SEAL, BRK PIPE CLIP ANC PLT (15.222)	3–H2,10

4.690 SEAL – VALVE, Hydraulic Brake Combo/Monitering Valve

98	Y FRT ABS BRAKE LOC (JAG), ACTIVE BRAKE CTL (JL4)	10400741	1	3.50	SEAL, BRK PRESS DIFF SW (O RING) (04.685)	3–H6,60
99–00	Y ACTIVE BRAKE CTL (JL4)	10400741	1	3.50	SEAL, BRK PRESS DIFF SW (O RING) (04.685)	3–H6,60
98	Y FRT ABS BRAKE LOC (JAG), ACTIVE BRAKE CTL (JL4)	10293376	1	63.50	VALVE, BRK COMB (AC–DELCO #172–2247)	3–G9,33
99–00	Y ACTIVE BRAKE CTL (JL4)	10293376	1	63.50	VALVE, BRK COMB (AC–DELCO #172–2247)	3–G9,33

4.710 BOLT – BRACKET – CONNECTOR – SENSOR – SWITCH, Electronic Brake Control

NOTE: AT TIMES THE BRAKE SENSOR IS SERVICED ONLY AS PART OF THE REAR WHEEL HUB ASSEMBLY LOCATED IN GROUP 5.806

97–02	Y	11515397	2	.22	BOLT, WHL SPD SEN BRKT (10.685)	3–G6,27
97–02	Y	10278547	RH	3.50	BRACKET, WHL SPD SEN	3–G6,26
97–02	Y	10278548	LH	3.50	BRACKET, WHL SPD SEN	3–G6,26
98–00	Y	12102748	1	23.93	CONNECTOR, SEN–BRK PRESS MOD VLV PRESS (BLACK) (3–WAY F) (W/LEADS) (02.535) (AC–DELCO #PT375)	3–G9,31
98	Y07–67 FRT ABS BRAKE LOC (JAG)	12102748	1	23.93	CONNECTOR, SEN–BRK PRESS MOD VLV PRESS (BLACK) (3–WAY F) (W/LEADS) (02.535) (AC–DELCO #PT375)	3–G9,31

cardiagn.com

4.710 BOLT – BRACKET – CONNECTOR – SENSOR – SWITCH, Electronic Brake Control (Con't)

98–02	Y	12146121	1	1.58	CONNECTOR, SEN–VEH LATL (3–WAY F) (02.170)	4–G14,5
02	Y 4–SPD A/TRANS (M30), A/C FRT AUTO/AUX CONT (CJ2), T&T WHL (N37), (EXC TAIL & S/LP (T89) (EXPORT)	12146121	1	1.58	CONNECTOR, SEN–VEH LATL (3–WAY F) (02.170)	4–G14,5
97–02	Y	12102632	1	21.83	CONNECTOR, SW–ELEK TRACT CONT (BLACK) (6–WAY F) (W/LEADS) (09.656) (AC–DELCO #PT319)	
02	YY67 4–SPD A/TRANS (M30), A/C FRT AUTO/AUX CONT (CJ2), T&T WHL (N37), (EXC TAIL & S/LP (T89) (EXPORT)	12102632	1	21.83	CONNECTOR, SW–ELEK TRACT CONT (BLACK) (6–WAY F) (W/LEADS) (09.656) (AC–DELCO #PT319)	
98	Y FRT ABS BRAKE LOC (JAG), ACTIVE BRAKE CTL (JL4)	10411078	1		SENSOR, BRK PRESS MOD VLV PRESS	3–G9,32
99–00	Y ACTIVE BRAKE CTL (JL4) .	10411078	1		SENSOR, BRK PRESS MOD VLV PRESS	3–G9,32
97–02	Y	11516210	1	21.90	SWITCH, ELEK BRK CONT BRK PED (W/ S/LP SW)	3–H22,6
97	Y (EXC CHASSIS, REALTIME DAMPING (F45)	12135154	1	42.00	SWITCH, ELEK TRAC CONT (W/ASR, W/O RTD)	4–E4,50
98–99	Y (EXC CHASSIS, REALTIME DAMPING (F45), ACTIVE BRAKE CTL (JL4)	12135154	1	42.00	SWITCH, ELEK TRAC CONT	4–E4,50
98–99	Y ACTIVE BRAKE CTL (JL4), (EXC CHASSIS, REALTIME DAMPING (F45)	12198726	1	42.00	SWITCH, ELEK TRAC CONT	4–E4,50
00	Y (C88), (EXC CHASSIS, REALTIME DAMPING (F45), ACTIVE BRAKE CTL (JL4) ..	10440629	1	67.50	SWITCH, ELEK TRAC CONT	4–E4,50
00	Y ACTIVE BRAKE CTL (JL4), (EXC C88), CHASSIS, REALTIME DAMPING (F45) .	10440631	1		SWITCH, ELEK TRAC CONT	4–E4,50
00	Y (EXC C88), CHASSIS, REALTIME DAMPING (F45), ACTIVE BRAKE CTL (JL4) ..	12135154	1	42.00	SWITCH, ELEK TRAC CONT	4–E4,50
01	Y07–67 ACTIVE BRAKE CTL (JL4), (EXC C88), CHASSIS, REALTIME DAMPING (F45) .	10440631	1		SWITCH, ELEK TRAC CONT	4–E4,50
01	Y37 (EXC C88)	10440631	1		SWITCH, ELEK TRAC CONT	4–E4,50
02	Y (EXC C88), CHASSIS, REALTIME DAMPING (F45) .	10440631	1		SWITCH, ELEK TRAC CONT	4–E4,50
	*EXPORT**********EXPORT**********EXPORT**********EXPORT**********EXPORT*					
00–01	Y07–67 ACTIVE BRAKE CTL (JL4), (EXC CHASSIS, REALTIME DAMPING (F45), (C88)	12198726	1	42.00	SWITCH, ELEK TRAC CONT	4–E4,50
02	Y (EXC CHASSIS, REALTIME DAMPING (F45), (C88)	12198726	1	42.00	SWITCH, ELEK TRAC CONT	4–E4,50

4.720 BOLT – CONNECTOR – CONNECTOR KIT – HARNESS – MODULE – PLATE – RELAY – RETAINER – WIRE, Electronic Brake Control

97	Y	10276651	1	20.60	BOLT, ELEK BRK CONT MDL	3–H25,4
98	Y (YGH)	10276651	1	20.60	BOLT, ELEK BRK CONT MDL	3–H25,4
99–00	Y	10276651	1	20.60	BOLT, ELEK BRK CONT MDL	3–H25,4

cardiagn.com

4.720 BOLT – CONNECTOR – CONNECTOR KIT – HARNESS – MODULE – PLATE – RELAY – RETAINER – WIRE, Electronic Brake Control (Con't)

99–00	Y	25625388	4	5.18	BOLT, ELEK BRK CONT MDL (M5, 28.2MM LENGTH) (TORX T25) (04.730)	3–I2,16
00	Y07 LP (T86)	25625388	1	5.18	BOLT, ELEK BRK CONT MDL (M5, 28.2MM LENGTH) (TORX T25) (04.730)	3–I2,16
97–00	Y	12167312	1	49.73	CONNECTOR KIT, ELEK BRK CONT MDL WRG HARN (INCLS 32–WAY F & 6–WAY F CONN, RET, CVR & CAV PLUGS/SEALS)	3–G6,13
97–02	Y	15306302	4	20.87	CONNECTOR, INLINE–TO WHL SPD SEN (GREY) (2–WAY F W/LEADS) (04.710) (AC–DELCO #PT1357)	3–G6,1
97	Y07	12125676	1	66.81	CONNECTOR, MDL–ELEK BRK CONT (BLACK) (10–WAY F) (W/LEADS) (02.530) (AC–DELCO #PT588)	
98	Y	12101875	1	33.66	CONNECTOR, MDL–ELEK BRK CONT (BLUE) (8–WAY F) (W/LEADS) (02.535) (AC–DELCO #PT266)	3–I2,1
98	Y	15306189	1	42.09	CONNECTOR, MDL–ELEK BRK CONT (BLACK) (8–WAY F W/LEADS, 7–12GA & 4–18GA AS REQ) (02.535) (AC–DELCO #PT1346)	3–I2,1
99–00	Y	12167312	1	49.73	CONNECTOR, MDL–ELEK BRK CONT (INCLS 32–WAY F & 6–WAY F CONN, RET, CVR & CAV PLUGS/SEALS)	3–G6,13
01–02	Y	12167602	1	32.90	CONNECTOR, MDL–ELEK BRK CONT (7–WAY F W/O LEADS AND 29 WAY F)	3–G18,13
01–02	YY07–67	15356700	1	1.60	CONNECTOR, MDL–ELEK BRK CONT (29–WAY FEM MIC/P 100W (W/O LEADS) (29–WAY F, MIC/P100, W/O LEADS) (04.663)	3–G18,13
01	YY07–67 ACTIVE BRAKE CTL (JL4)	10434076	1	31.22	HARNESS, ELEK BRK CONT WRG HARN EXTN	3–I5,4
01	YY37	10434076	1	31.22	HARNESS, ELEK BRK CONT WRG HARN EXTN	3–I5,4
02	Y	10434076	1	31.22	HARNESS, ELEK BRK CONT WRG HARN EXTN	3–I5,4
97–02	Y	12163714	2	40.32	HARNESS, WHL SPD SEN WRG HARN EXTN	3–G6,28
98	Y FRT ABS BRAKE LOC (JAG), ACTIVE BRAKE CTL (JL4), ANTILOCK DISC BRK (JL9)	9376711	1	436.00	MODULE, ELEK BRK & TRACT CONT (AC–DELCO #09376711)	3–G9,3
97	Y	9355246	1	849.00	MODULE, ELEK BRK CONT	3–G6,3
98	Y07–67 (EXC ACTIVE BRAKE CTL (JL4)	9367071	1	436.00	MODULE, ELEK BRK CONT (AC–DELCO #9367071)	3–G6,3
99–00	Y ACTIVE BRAKE CTL (JL4), ANTILOCK DISC BRK (JL9)	9376711	1	436.00	MODULE, ELEK BRK CONT (AC–DELCO #09376711)	3–G9,3
99–00	Y07–67 ANTILOCK DISC BRK (JL9), (EXC ACTIVE BRAKE CTL (JL4)	9367071	1	436.00	MODULE, ELEK BRK CONT (AC–DELCO #9367071)	3–G6,3

cardiagn.com

4.720 BOLT – CONNECTOR – CONNECTOR KIT – HARNESS – MODULE – PLATE – RELAY – RETAINER – WIRE, Electronic Brake Control (Con't)

99	Y37 ANTILOCK DISC BRK (JL9), P/S (VARIABLE) (NV7), PERF (Z19), (EXC ACTIVE BRAKE CTL (JL4)	9367071	1	436.00	MODULE, ELEK BRK CONT (AC–DELCO #9367071)	3–G6,3
99	Y37 ANTILOCK DISC BRK (JL9), (EXC P/S (VARIABLE) (NV7)	9378853	1		MODULE, ELEK BRK CONT (AC–DELCO #09378853)	3–G9,3
01	Y	12208997	1		MODULE, ELEK BRK CONT	3–I5,1
02	Y	12216561	1		MODULE, ELEK BRK CONT	3–I5,1
97–02	Y CHASSIS, REALTIME DAMPING (F45)	14090618	1	8.08	PLATE, ELEK BRK CONT WRG HARN GROM TAP (03.675)	3–G6,14
97	Y (EXC SIG & MKR LP (T90) (EXPORT)	12088567	1	16.45	RELAY, ELEK BRK CONT (GRAY) (4–WAY) (09.277) (AC–DELCO #15–8571)	2–G2,12
99	Y37 (EXC ACTIVE BRAKE CTL (JL4), P/S (VARIABLE) (NV7), FRT FOG LP (T96) ..	12129232	1	3.50	RETAINER, ELEK BRK CONT WRG HARN MDL CONN (32–WAY FEMALE MIC/P 100W RETAINER, CLEAR)	2–K7,14
98	Y FRT ABS BRAKE LOC (JAG)	12163796	1	10.20	WIRE, BRK PRESS MOD VLV WRG HARN GND	3–G9,35
99	Y	12163796	1	10.20	WIRE, BRK PRESS MOD VLV WRG HARN GND	3–G9,35
00–01	Y	15329395	1	10.15	WIRE, BRK PRESS MOD VLV WRG HARN GND	3–G14,35

4.730 BOLT – BRACKET – INSULATOR – VALVE, Electronic Brake Control

97–00	Y	25625388	4	5.18	BOLT, BRK PRESS MOD VLV (M5, 28.2MM LENGTH) (TORX T25) .	3–H25,2
00	Y37 ANTILOCK DISC BRK (JLS), (EXC P/S (VARIABLE) (NV7)	10276651	1	20.60	BOLT, BRK PRESS MOD VLV (04.720)	3–I2,17
01–02	Y	10422885	2	4.33	BOLT, BRK PRESS MOD VLV	3–I5,11
97	Y	10289122	LH	21.35	BRACKET, BRK PRESS MOD VLV (POSN #1) (ABS/ASR RR PACKAGE)	3–H25,9
97	Y	10289123	RH	21.35	BRACKET, BRK PRESS MOD VLV (POSN #2) (ABS/ASR RR PACKAGE)	3–H25,8
98	Y FRT ABS BRAKE LOC (JAG)	10284788	1	38.25	BRACKET, BRK PRESS MOD VLV	3–I2,12
98	Y (EXC FRT ABS BRAKE LOC (JAG)	10289122	LH	21.35	BRACKET, BRK PRESS MOD VLV (POSN #1) (ABS/ASR RR PACKAGE)	3–H25,9
98	Y (EXC FRT ABS BRAKE LOC (JAG)	10289123	RH	21.35	BRACKET, BRK PRESS MOD VLV (POSN #2) (ABS/ASR RR PACKAGE)	3–H25,8
99–00	Y	10284788	1	38.25	BRACKET, BRK PRESS MOD VLV	3–I2,12
01–02	Y	10438000	1	21.35	BRACKET, BRK PRESS MOD VLV	3–I5,9
97–00	Y	10291812	3	3.50	INSULATOR, BRK PRESS MOD VLV	3–H25,5
01–02	Y	10422887	2	7.10	INSULATOR, BRK PRESS MOD VLV	3–I5,12
97	Y	12527809	1	1696.00	VALVE, BRK PRESS MOD (AC–DELCO #12527809)	3–G6,2
98–00	Y ACTIVE BRAKE CTL (JL4) .	10417038	1	1696.00	VALVE, BRK PRESS MOD (AC–DELCO #10417038)	3–G6,2
98	Y (EXC FRT ABS BRAKE LOC (JAG)	12527809	1	1696.00	VALVE, BRK PRESS MOD (AC–DELCO #12527809)	3–G6,2

cardiagn.com

4.730 BOLT – BRACKET – INSULATOR – VALVE, Electronic Brake Control (Con't)

98	Y FRT ABS BRAKE LOC (JAG), (EXC ACTIVE BRAKE CTL (JL4)	12530740	1	1696.00	VALVE, BRK PRESS MOD (AC–DELCO #12530740)	3–G9,2
99–00	Y ANTILOCK DISC BRK (JL9), (EXC ACTIVE BRAKE CTL (JL4)	12530740	1	1696.00	VALVE, BRK PRESS MOD (AC–DELCO #12530740)	3–G9,2
00	Y07 LP (T86), (EXC ACTIVE BRAKE CTL (JL4)	12530740	1	1696.00	VALVE, BRK PRESS MOD (AC–DELCO #12530740)	3–G9,2
01–02	Y	10437872	1	1077.00	VALVE, BRK PRESS MOD (W/ELEK BRK & TRACT CONT MDL) (INCLS SENSOR)	

4.779 CABLE, Parking Brake

97–02	Y	10299165	RH	35.25	CABLE, PARK BRK RR	3–I7,1
97–02	Y	10409250	LH	35.25	CABLE, PARK BRK RR	3–I7,1
98	Y	18039887	LH	36.30	CABLE, PARK BRK RR (AC–DELCO #18P1817) (DURASTOP)	3–I7,1
98	Y	18039888	RH	36.30	CABLE, PARK BRK RR (AC–DELCO #18P1818) (DURASTOP)	3–I7,1

4.785 BRACKET – CLIP – PLATE – RETAINER – SEAL, Parking Brake Cable

97–02	Y	10262949	LH	3.50	BRACKET, PARK BRK CBL	3–I7,5
97–02	Y	10262950	RH	3.50	BRACKET, PARK BRK CBL	3–I7,5
97–02	Y	10255639	1	4.40	BRACKET, PARK BRK CBL EQLZR .	3–I7,21
97–02	Y	10281421	2	3.50	CLIP, PARK BRK RR CBL	3–I7,3
97–02	Y	10404603	2	1.70	PLATE, PARK BRK RR CBL CLIP STUD	3–I7,9
97–02	Y	10276217	1	3.50	RETAINER, BRK PIPE CLIP BOLT (PUSH ON)	3–G25,7
98–02	Y	10415038	2	3.45	SEAL, PARK BRK RR CBL CLIP STUD PLT (15.222)	6–D8,48

4.805 BOOSTER – GASKET, Hydraulic Power Brake Booster

97–00	Y	18026035	1	368.00	BOOSTER, P/B (04.901) (AC–DELCO #178–638)	3–G25,4
01–02	Y	18046267	1	368.00	BOOSTER, P/B (04.901) (AC–DELCO #178–662)	3–H11,51
97–02	Y	10160244	1	3.48	GASKET, P/B BOOS (04.910)	3–H22,3

4.845 NUT, Hydraulic Power Brake Booster

97–01	Y	25664438	4	3.33	NUT, P/B BOOS (M10X1.5X11) (04.662)	3–H22,13
00–02	Y	11501849	AR	*1.00	NUT, P/B BOOS (M10X1.5) (ZOR) (TYPE B) (08.921)	
02	Y	25664438	4	3.33	NUT, P/B BOOS (M10X1.5X11) (04.662)	3–H22,13

4.901 BOOSTER, Vacuum Power Brake

97–00	Y	18026035	1	368.00	BOOSTER, P/B (AC–DELCO #178–638)	3–G25,4
01–02	Y	18046267	1	368.00	BOOSTER, P/B (AC–DELCO #178–662)	3–H11,51

4.931 HOSE, Vacuum Power Brake

97–02	Y	10255124	1	8.15	HOSE, P/B BOOS VAC	3–G25,1

cardiagn.com

4.955 GROMMET – VALVE KIT, Vacuum Power Brake Booster Check

97–02	Y	18060007	1	7.48	GROMMET, P/B BOOS VAC CHK VLV	3–H15,4
97–02	Y	18022219	1	19.00	VALVE KIT, P/B BOOS VAC CHK (W/VALVE & GROMMET) (AC–DELCO #179–1266)	3–H15,3

cardiagn.com

5.017 PAD KIT – SHOE KIT, Brake

97–02	Y	12530681	1	174.40	PAD KIT, FRT DISC BRK (AC–DELCO #171–781)	3–H18,3
02	Y37 ANTILOCK DISC BRK (JL9)	88952008	1		PAD KIT, FRT DISC BRK	3–H18,3
97–02	Y	12530688	1	84.66	PAD KIT, RR DISC BRK (AC–DELCO #171–782)	3–H20,3
97–98	Y	12530696	2	63.04	SHOE KIT, RR PARK BRK (AC–DELCO #171–783)	3–I9,2
99–02	Y	12455804	2	63.04	SHOE KIT, RR PARK BRK (AC–DELCO #171–806)	3–I9,2
	*EXPORT**********EXPORT**********EXPORT**********EXPORT**********EXPORT*					
02	Y07–67 ANTILOCK DISC BRK (JL9), T2F (EXPORT)	88952008	1		PAD KIT, FRT DISC BRK	3–H18,3

5.149 BRAKE KIT, Parking Brake Shoe

97–98	Y	12530691	2	151.00	BRAKE KIT, RR PARK	3–I9,1
99–02	Y	12455801	2	138.00	BRAKE KIT, RR PARK	3–I9,1

5.158 PLATE, Parking Brake Shoe Lever

97–98	Y	12530692	LH	21.85	PLATE, RR PARK BRK STOP	3–I9,5
97–98	Y	12530693	RH	21.85	PLATE, RR PARK BRK STOP	3–I9,5
99–02	Y	12455802	LH	21.85	PLATE, RR PARK BRK STOP	3–I9,5
99–02	Y	12455803	RH	21.85	PLATE, RR PARK BRK STOP	3–I9,5

5.380 BRACKET – REINFORCEMENT, Rear Axle Control Arm

97–02	Y	10281365	LH	7.19	BRACKET, RR SUSP UPR CONT ARM (#102 FRT)	4–G4,12
97–02	Y	10281366	RH	7.19	BRACKET, RR SUSP UPR CONT ARM (#102 FRT)	4–G4,47
97–02	Y	10281367	LH	7.19	BRACKET, RR SUSP UPR CONT ARM (RR)	4–G4,10
97–02	Y	10281368	RH	6.55	BRACKET, RR SUSP UPR CONT ARM (RR)	4–G4,51
97–02	Y	10280564	2	2.75	REINFORCEMENT, RR SUSP CONT ARM BRKT	4–G4,11

5.382 ARM – CAM, Rear Axle Control Arm

97–02	Y	10233635	LH	181.00	ARM, RR SUSP LWR CONT (WITH LWR BALL STUD) (PERM MOLD ALUM)	4–G8,26
97–02	Y	10233636	RH	181.00	ARM, RR SUSP LWR CONT (PERM MOLD ALUM)	4–G8,26
97–02	Y	10233620	LH	93.25	ARM, RR SUSP UPR CONT (COMPOSITE)	4–G8,10
97–02	Y	10233621	RH	93.25	ARM, RR SUSP UPR CONT (COMPOSITE)	4–G8,10
97–02	Y	10254818	2	1.95	CAM, RR SUSP LWR CONT ARM ADJ (FWD POSN) (05.381)	4–G8,71

5.383 BOLT – NUT, Rear Axle Control Arm

97–02	Y	10200097	2	7.19	BOLT, RR SUSP LWR CONT ARM (RR POSN #1) (00.002)	4–G8,70
97–02	Y	10254819	2	4.95	BOLT, RR SUSP LWR CONT ARM (FWD POSN #2) (138.6MM LGXM14X2.6)	4–G8,72
97–02	Y	11515816	4	3.33	BOLT, RR SUSP UPR CONT ARM (M12X1.75X80) (08.900)	4–G8,9

cardiagn.com

5.383 BOLT – NUT, Rear Axle Control Arm (Con't)

97–02	Y	11515744	2	4.88	NUT, RR SUSP LWR CONT ARM (RR POSN #1) (M12X1.75X14 (10), ZO, FLANGED) (08.917)	
97–02	Y	11516078	2	3.33	NUT, RR SUSP LWR CONT ARM (M12X1.75) (08.917)	
97–02	Y	11516382	2	*1.03	NUT, RR SUSP LWR CONT ARM (FWD POSN #2) (M14X2X16 19.6) (HFH LK) (08.917)	

5.386 TAG, Rear Axle

97–02	Y	12369462	1	1.45	TAG, R/AXL IDENT	3–J4,16

5.387 BOLT – CLIP – HOUSING – VENT, Rear Axle

97–02	Y	12458150	9	3.33	BOLT, R/AXL VENT HOSE CLIP	3–J4,6
97–02	Y 4–SPD A/TRANS (M30)	12458149	1	3.33	CLIP, R/AXL VENT HOSE	3–J4,6
97–02	Y 4–SPD A/TRANS (M30), 3.15R (G90)	12458101	1	494.19	HOUSING, R/AXL	3–J4,23
97–02	Y 6–SPD M/TRANS (MM6)	12458101	1	494.19	HOUSING, R/AXL	3–J4,23
97–02	Y 4–SPD A/TRANS (M30), 2.73R (GU2)	12458128	1	494.19	HOUSING, R/AXL	3–J4,23
01–02	Y37 MANUAL 6 SPD O/D TRANS, TREMEC (M12)	12458101	1	494.19	HOUSING, R/AXL	3–J4,23
97–02	Y	12458129	1	8.65	VENT, R/AXL	3–J4,6

5.392 LUBRICANT, Rear Axle Housing Oil

97–98	Y	12345977	AR	*4.70	LUBRICANT, R/AXL (LUBRICANT, RR AXL, SAE 80W–90, GL–5 (23 OZ)) (08.800)	
98–00	Y	12378261	AR	*26.00	LUBRICANT, R/AXL (1 U.S. QUART) (SYNTHETIC AXLE LUBRICANT, SAE 75W–90) (08.800)	
98–00	Y	12378525	AR		LUBRICANT, R/AXL (16 GALLON KEG)	
97–01	Y	1052358	AR	*6.70	LUBRICANT, R/AXL FRICT MODIFIER (LIMITED–SLIP DIFFERENTIAL) (4 OZ) (08.800)	

5.398 BOLT – COVER – STUD, Rear Axle Housing

97–02	Y	12458150	6	3.33	BOLT, DIFF CARR CVR (05.387)	3–J7,2
97–02	Y	12369459	7	4.53	BOLT, R/AXL HSG CVR (04.329) (AC–DELCO #12369459)	3–J4,1
97–02	Y	12458079	1	21.45	COVER, R/AXL HSG	3–J4,2
97–02	Y	12458078	1	3.33	STUD, R/AXL HSG CVR	3–J4,19

5.399 GASKET, Rear Axle Housing Cover

97–02	Y	12458151	1	9.90	GASKET, R/AXL HSG CVR	3–J4,3

5.400 GASKET – PLUG, Rear Axle or Final Drive Filler and Drain

97–02	Y	12369215	2	.83	GASKET, R/AXL HSG FIL PLUG (QTY (1) TO FIL PLG, QTY (1) TO DRN PLG)	3–J4,15
01–02	Y37 MANUAL 6 SPD O/D TRANS, TREMEC (M12)	12369461	1	9.68	PLUG, R/AXL HSG DRN	3–J4,14
97–02	Y	12369461	2	9.68	PLUG, R/AXL HSG FILL	3–J4,14

cardiagn.com

5.416 BOOT – CLAMP – END KIT – LINK KIT – NUT, Rear Axle

97–02	Y	7844424	1	16.30	BOOT, RR SUSP ADJ LINK (RR TOE LINK SEAL)	4–G8,53
97–02	Y	7844100	1	2.00	CLAMP, RR SUSP ADJ LINK BOOT (ROD BOOT, BLK OX COATING) (19MM)	4–G8,54
97–02	Y	26036823	1	2.60	CLAMP, RR SUSP ADJ LINK BOOT (RETAINING SEAL) (44MM)	4–G8,52
97–02	Y	26058600	2	47.50	END KIT, RR SUSP ADJ LINK OTR (05.415)	4–G8,57
97	Y	26058599	1	48.50	LINK KIT, RR SUSP ADJ	4–G8,55
98–02	Y	26072661	2	48.50	LINK KIT, RR SUSP ADJ	4–G8,55
97–02	Y	3537772	2	*1.45	NUT, RR SUSP ADJ LINK (OTR) (POSN #1) (M12.0X1.75X10.6) (08.917)	4–G8,36
97–02	Y	11516383	2	*1.24	NUT, RR SUSP ADJ LINK (INR) (POSN #2) (16X2X18.9 34.2OD) (08.917)	
97–02	Y	26017267	2	7.78	NUT, RR SUSP ADJ LINK (M14X1.5X11, 510M (5), ZC) (06.526)	4–G8,56

5.420 SHAFT, Rear Axle Drive

97–02	Y	88893900	1	242.25	SHAFT, R/AXL	3–J7,32
97–02	Y	10226316	2	219.53	SHAFT, RR WHL DRV UJT	4–G8,66

5.422 BEARING – LOCK – NUT – RING – SEAL, Rear Axle Shaft

97–02	Y	12458146	LH	31.50	BEARING, R/AXL SHF (OTR)	3–J7,4
97–02	Y	12458084	1	.53	LOCK, R/AXL SHF	3–J4,6
97–02	Y	10257766	2	8.46	NUT, RR WHL DRV UJT SHF (M27X2X18) (HFH LOCK) (06.056) (AC–DELCO #36–4135)	4–G8,38
97–02	Y	12369463	2	.83	RING, R/AXL SHF BRG RET	3–J7,26
97–02	Y	12369460	2	16.44	SEAL, OUTPUT SHF OIL (05.430)	3–J7,1

5.428 BAND & CLIP KIT – JOINT KIT, Rear Axle U Joint

97–02	Y	12532157	2	71.25	BAND & CLIP KIT, RR SHF	4–G8,66
97–02	Y	12532154	2	247.00	JOINT KIT, RR WHL DRV SHF INR	4–G8,66
97–02	Y	12532153	2	247.08	JOINT KIT, RR WHL DRV SHF OTR	4–G8,66

5.430 BOOT KIT, Rear Axle U Joint

97–02	Y	12532156	2	47.20	BOOT KIT, RR INR SHF	4–G8,66
97–02	Y	12532155	2	47.20	BOOT KIT, RR OTR SHF	4–G8,66

5.447 BEARING, Differential Drive Pinion Front

97–02	Y	12458141	1	94.75	BEARING, DIFF DRV P/GR OTR (AC–DELCO #FW112)	3–J4,24

5.453 CAGE – SPACER, Differential Drive Pinion Front and Center Bearing

97–02	Y	88984478	1		CAGE, DIFF DRV P/GR BRG	
97–02	Y	12458131	AR	24.46	SPACER, DIFF DRV P/GR BRG (15.782 LONG)	3–J4,22
97–02	Y	12458132	AR	24.46	SPACER, DIFF DRV P/GR BRG (15.809 LONG)	3–J4,22
97–02	Y	12458133	AR	24.46	SPACER, DIFF DRV P/GR BRG (15.836 LONG)	3–J4,22

© 2001 GENERAL MOTORS SERVICE PARTS OPERATIONS–CHEVROLET–15Y

cardiagn.com

5.453 CAGE – SPACER, Differential Drive Pinion Front and Center Bearing (Con't)

97–02	Y	12458134	AR	24.46	SPACER, DIFF DRV P/GR BRG (15.863 LONG)	3–J4,22
97–02	Y	12458135	AR	24.46	SPACER, DIFF DRV P/GR BRG (15.890 LONG)	3–J4,22
97–02	Y	12458136	AR	24.46	SPACER, DIFF DRV P/GR BRG (15.917 LONG)	3–J4,22
97–02	Y	12458137	AR	24.46	SPACER, DIFF DRV P/GR BRG (15.944 LONG)	3–J4,22
97–02	Y	12458138	AR	24.46	SPACER, DIFF DRV P/GR BRG (15.971 LONG)	3–J4,22
97–02	Y	12458139	AR	24.46	SPACER, DIFF DRV P/GR BRG (15.998 LONG)	3–J4,22
97–02	Y	12458140	AR	24.46	SPACER, DIFF DRV P/GR BRG (16.025 LONG)	3–J4,22

5.460 SHIM, Differential Rear Pinion Bearing

97–02	Y	88984480	AR		SHIM, DIFF DRV P/GR BRG (127.7X161X1)	
97–02	Y	88984481	AR		SHIM, DIFF DRV P/GR BRG (127.7X161X0.5)	
97–02	Y	88984482	AR		SHIM, DIFF DRV P/GR BRG (127.7X161X0.3)	
97–02	Y	88984483	AR		SHIM, DIFF DRV P/GR BRG (127.7X161X0.25)	
97–02	Y	88984484	AR		SHIM, DIFF DRV P/GR BRG (127.7X161X0.2)	

5.476 BOLT, Pinion Bearing and Oil Seal

97–02	Y	12458150	8	3.33	BOLT, DIFF DRV P/GR BRG RET (05.387)	3–J4,18

5.484 BEARING, Differential Drive Pinion

97–02	Y	12458130	1	102.00	BEARING, DIFF DRV P/GR INR (AC–DELCO #FW111)	3–J4,21

5.505 CARRIER, Differential, with Cap

97–02	Y 6–SPD M/TRANS (MM6)	12551769	1	1364.97	CARRIER, DIFF (W/GEARS) (3.42 RATIO)	3–J4,6
97–02	Y 4–SPD A/TRANS (M30), 2.73R (GU2)	12554837	1	1398.26	CARRIER, DIFF (2.73 RATIO) (W/GEARS) (05.546)	3–J4,6
97–02	Y 5.7G (LS1), 4–SPD A/TRANS (M30), 3.15R (G90)	12556313	1	1392.02	CARRIER, DIFF (3.15 RATIO)	3–J4,6
01	YY37 MANUAL 6 SPD O/D TRANS, TREMEC (M12), 3.42R (GU6)	12561853	1	1351.68	CARRIER, DIFF	3–J4,6
02	YY37 5.7S (LS6), MANUAL 6 SPD O/D TRANS, TREMEC (M12), 3.42R (GU6)	12572683	1		CARRIER, DIFF	3–J4,6

5.506 BOLT – NUT, Differential Carrier

97–02	Y	11516862	2	3.33	BOLT, DIFF CARR (CARRIER ASM TO TRANS) (HFH DOME HD M10X1.5X40 9, 8 7114M 30, 80D HDR PT) (08.900)	
97–02	Y	10255857	3	*1.80	NUT, DIFF CARR (CARRIER ASM TO TRANS) (M10X1.5 FLANGED HEX HEAD) (08.917)	

cardiagn.com

5.508 MAGNET – RETAINER – SEAL, Axle Housing to Differential Carrier

97–02	Y	12458080	1	4.55	MAGNET, R/AXL HSG CHIP COLLECTOR (AC–DELCO #12458080)	3–J4,6
97–02	Y 4–SPD A/TRANS (M30)	12369457	1	38.25	RETAINER, DIFF CARR SEAL (PLATE)	3–J7,10
97–02	Y	12457739	2	16.15	SEAL, DIFF CARR CVR (O–RING)	3–J7,5

5.510 BOLT – COVER – DIFFERENTIAL, Differential (Ring Gear and Pinion)

97–02	Y	12458085	10	3.33	BOLT, DIFF CASE	3–J7,22
97–02	Y	12458145	LH	158.00	COVER, DIFF CARR	3–J7,3
97–02	Y	12458148	RH	158.00	COVER, DIFF CARR	3–J7,13
97–02	Y 6–SPD M/TRANS (MM6), 3.42R (GU6)	88984487	1		DIFFERENTIAL, (3.42 RATIO)	3–J7,16
97–02	Y 4–SPD A/TRANS (M30), 2.73R (GU2)	88984490	1		DIFFERENTIAL, (2.73 RATIO)	3–J7,16
97–02	Y 5.7G (LS1), 4–SPD A/TRANS (M30), 3.15R (G90)	88984491	1		DIFFERENTIAL, (3.42 RATIO)	3–J7,16
01	YY37 5.7S (LS6), MANUAL 6 SPD O/D TRANS, TREMEC (M12), 3.42R (GU6)	88984488	1		DIFFERENTIAL, (3.42 RATIO)	3–J7,16
02	YY37 5.7S (LS6), MANUAL 6 SPD O/D TRANS, TREMEC (M12), 3.42R (GU6)	88984489	1		DIFFERENTIAL, (3.42 RATIO)	3–J7,16

5.511 DISC KIT, Differential Clutch

97–02	Y	12458083	2	80.62	DISC KIT, L/SLIP DIFF CLU	3–J4,4

5.529 GEAR SET, Ring and Pinion

97–02	Y 4–SPD A/TRANS (M30), 2.73R (GU2)	12458081	1	544.12	GEAR SET, DIFF RING & DRV PINION	
97–02	Y 5.7G (LS1), 4–SPD A/TRANS (M30), 3.15R (G90)	12458102	1	544.12	GEAR SET, DIFF RING & DRV PINION	
97–02	Y 6–SPD M/TRANS (MM6), 3.42R (GU6)	12458103	1	544.12	GEAR SET, DIFF RING & DRV PINION	
01	YY37 5.7S (LS6), MANUAL 6 SPD O/D TRANS, TREMEC (M12), 3.42R (GU6)	88984485	1		GEAR SET, DIFF RING & DRV PINION (3.42 RATIO)	
02	YY37 5.7S (LS6), MANUAL 6 SPD O/D TRANS, TREMEC (M12), 3.42R (GU6)	88984486	1		GEAR SET, DIFF RING & DRV PINION (3.42 RATIO)	

5.531 BOLT, Ring Gear

97–02	Y	12458082	10	3.33	BOLT, DIFF R/GR	3–J7,17

5.533 NUT, Pinion Extension Thrust

97–02	Y	12458142	1	36.05	NUT, DIFF DRV P/GR BRG RET	3–J4,20

5.536 BEARING, Differential Side Gear

97–02	Y	9422481	2	32.50	BEARING, DIFF (SI GEAR) (06.311)

5.537 SHIM, Differential Bearing Adjusting

97–02	Y	12458086	AR	8.15	SHIM, DIFF BRG (87X96.8X2.2)	3–J4,5
97–02	Y	12458087	AR	8.15	SHIM, DIFF BRG (87X96.8X2.1)	3–J4,5
97–02	Y	12458088	AR	8.15	SHIM, DIFF BRG (87X96.8X2)	3–J4,5
97–02	Y	12458089	AR	8.15	SHIM, DIFF BRG (87X96.8X1.9)	3–J4,5
97–02	Y	12458090	AR	8.15	SHIM, DIFF BRG (87X96.8X1.8)	3–J4,5

cardiagn.com

5.537 SHIM, Differential Bearing Adjusting (Con't)

97–02	Y	12458091	AR	8.15	SHIM, DIFF BRG (87X96.8X1.7)	3–J4,5
97–02	Y	12458092	AR	8.15	SHIM, DIFF BRG (87X96.8X1.6)	3–J4,5
97–02	Y	12458093	AR	8.15	SHIM, DIFF BRG (87X96.8X1.5)	3–J4,5
97–02	Y	12458094	AR	8.15	SHIM, DIFF BRG (87X96.8X1.4)	3–J4,5
97–02	Y	12458095	AR	8.15	SHIM, DIFF BRG (87X96 8X1.3)	3–J4,5
97–02	Y	12458096	AR	8.15	SHIM, DIFF BRG (87X96.8X1.25)	3–J4,5
97–02	Y	12458097	AR	8.15	SHIM, DIFF BRG (87X96.8X1)	3–J4,5

5.544 SHAFT, Propeller

97–99	Y 6–SPD M/TRANS (MM6)	12456207	1	610.71	SHAFT, PROP	3–J13,16
97–99	Y 4–SPD A/TRANS (M30)	12456226	1	1061.18	SHAFT, PROP	3–J10,27
97–02	Y 4–SPD A/TRANS (M30)	88894016	1	314.73	SHAFT, PROP	3–J10,27
00	Y 6–SPD M/TRANS (MM6)	88893995	1	1400.70	SHAFT, PROP	3–J18,15
01–02	Y 6–SPD M/TRANS (MM6), MANUAL 6 SPD O/D TRANS, TREMEC (M12)	88894025	1	604.99	SHAFT, PROP	3–J18,15
97–02	Y 4–SPD A/TRANS (M30)	88894023	1	634.63	SHAFT, PROP SHF SPLINE	3–J10,22
00	Y 6–SPD M/TRANS (MM6)	88894030	1	634.63	SHAFT, PROP SHF SPLINE	3–J18,11
01–02	Y 6–SPD M/TRANS (MM6), MANUAL 6 SPD O/D TRANS, TREMEC (M12)	88894028	1	634.63	SHAFT, PROP SHF SPLINE	3–J18,11
97–02	Y 4–SPD A/TRANS (M30)	88894020	1	452.57	SHAFT, RR PROP SHF (SPLINED)	3–J10,40

5.545 BOLT – HUB – NUT, Propeller Shaft Pinion

97–99	Y	12456213	12	6.11	BOLT, PROP SHF CPLG	3–J10,23
00	Y 6–SPD M/TRANS (MM6)	12456213	12	6.11	BOLT, PROP SHF CPLG	3–J10,23
00–02	Y 4–SPD A/TRANS (M30)	12456213	12	6.11	BOLT, PROP SHF CPLG	3–J10,23
01–02	Y 6–SPD M/TRANS (MM6), MANUAL 6 SPD O/D TRANS, TREMEC (M12)	88894027	12	6.11	BOLT, PROP SHF CPLG	3–J18,13
97–02	Y 4–SPD A/TRANS (M30)	88894021	1	541.00	HUB, PROP SHF	3–J21,24
00	Y 6–SPD M/TRANS (MM6)	88894031	1	624.23	HUB, PROP SHF	3–J18,18
01–02	Y 6–SPD M/TRANS (MM6)	88894029	1	541.00	HUB, PROP SHF	3–J18,18
01–02	Y MANUAL 6 SPD O/D TRANS, TREMEC (M12)	88894029	1	541.00	HUB, PROP SHF	3–J18,18
97–02	Y 4–SPD A/TRANS (M30)	88894022	1	8.85	NUT, PROP SHF CPLG	3–J21,23

5.546 ADAPTER – BOLT – PIN – PLUG – SUPPORT, Front Propeller Shaft

97–99	Y 6–SPD M/TRANS (MM6)	12456204	1	290.27	ADAPTER, DRIVELINE SUPT RR	3–J13,11
97–99	Y 4–SPD A/TRANS (M30)	12456225	1	290.27	ADAPTER, DRIVELINE SUPT RR	3–J10,15
97–02	Y	11516862	5	3.33	BOLT, DRIVELINE SUPT (TO FRT BELLHOUSING) (POSN #3) (HFH DOME HD M10X1.5X40 9, 8 7114M 30, 80D HDR PT) (08.900)	3–J13,14
97–99	Y 6–SPD M/TRANS (MM6)	12456206	11	8.76	BOLT, DRIVELINE SUPT	3–J10,7
97–99	Y 4–SPD A/TRANS (M30)	12456206	12	8.76	BOLT, DRIVELINE SUPT	3–J10,7
97	Y 4–SPD A/TRANS (M30)	12559127	2	8.76	BOLT, DRIVELINE SUPT (POSN #3)	3–J10,12
97–99	Y	12456202	2	14.57	PIN, DRIVELINE SUPT LOC (TORQUE TUBE FRT HSG)	3–J10,3
97–99	Y	12456205	2	8.46	PIN, DRIVELINE SUPT LOC (TORQUE TUBE RR HSG)	3–J10,17
97–02	Y	12456202	2	14.57	PIN, DRIVELINE SUPT RR ADAP LOC	3–J10,3
97–02	Y 4–SPD A/TRANS (M30)	12551987	1	3.38	PLUG, DRIVELINE SUPT HOLE	3–J10,14
98–02	Y	21075686	2	*.51	PLUG, DRIVELINE SUPT HOLE (10.154)	3–J10,12

cardiagn.com

5.546 ADAPTER – BOLT – PIN – PLUG – SUPPORT, Front Propeller Shaft (Con't)

97–99	Y 6–SPD M/TRANS (MM6) ..	12456201	1	1364.97	SUPPORT, DRIVELINE (PART OF DRIVELINE SUPPORT COMPLETE ASM) (INCLS HOUSING AND PIN)	3–J13,4
97–99	Y 4–SPD A/TRANS (M30) ...	12456224	1	1077.83	SUPPORT, DRIVELINE (PART OF DRIVELINE SUPPORT COMPLETE ASM) (INCLS HOUSING AND PIN)	3–J10,13
97–02	Y 4–SPD A/TRANS (M30) ...	12564456	1	1513.38	SUPPORT, DRIVELINE (COMPLETE ASM) (COMPONENT PARTS SERVICED)	3–J10,5
97–02	Y 6–SPD M/TRANS (MM6) ..	12564457	1	1274.47	SUPPORT, DRIVELINE (COMPLETE ASM) (COMPONENT PARTS SERVICED)	3–J13,12
00	Y 6–SPD M/TRANS (MM6) ..	88893994	1	1783.03	SUPPORT, DRIVELINE (W/PINS) .	3–J18,5
00–02	Y 4–SPD A/TRANS (M30) ...	88893999	1	1783.03	SUPPORT, DRIVELINE	3–J21,10
01	Y MANUAL 6 SPD O/D TRANS, TREMEC (M12)	12564457	1	1274.47	SUPPORT, DRIVELINE (COMPLETE ASM) (COMPONENT PARTS SERVICED)	3–J13,12
01–02	Y 6–SPD M/TRANS (MM6), MANUAL 6 SPD O/D TRANS, TREMEC (M12)	88893994	1	1783.03	SUPPORT, DRIVELINE (W/PINS) .	3–J18,5

5.556 BEARING – BOLT – BUSHING – GUIDE – HOUSING – INSULATOR – PLUG – RING – SEAL – SLINGER, Universal Joint Sleeve Yoke

97–02	Y	12456210	1	64.50	BEARING, PROP SHF ENG FLG .	3–J10,21
97–99	Y	12456217	1	64.50	BEARING, PROP SHF TRANS FLG FRT	3–J10,34
97–02	Y	12456221	2	64.50	BEARING, PROP SHF TRANS FLG RR	3–J10,36
97–99	Y 4–SPD A/TRANS (M30) ...	12456227	1	8.75	BOLT, T/CV INPUT SHF GDE	3–J10,29
97–02	Y 4–SPD A/TRANS (M30) ...	8680027	1	8.60	BUSHING, PROP SHF FRT SLIP YOKE (INSIDE DIA 1.506–1.509) (PART OF TRANS CASE) (04.104) (AC–DELCO #8680027)	3–F7,7
97–99	Y	12456211	1	62.68	GUIDE, PROP SHF ENG FLG	3–J10,26
97–99	Y 4–SPD A/TRANS (M30) ...	88893996	1	62.68	GUIDE, PROP SHF ENG FLG	3–J10,26
00–02	Y 4–SPD A/TRANS (M30), 6–SPD M/TRANS (MM6) ...	88893996	1	62.68	GUIDE, PROP SHF ENG FLG	3–J10,26
01–02	Y MANUAL 6 SPD O/D TRANS, TREMEC (M12)	88893996	1	62.68	GUIDE, PROP SHF ENG FLG	3–J10,26
97–99	Y 6–SPD M/TRANS (MM6) ..	12456215	1	20.55	GUIDE, PROP SHF TRANS FLG .	3–J13,35
00	Y 6–SPD M/TRANS (MM6) ..	88894015	1	62.68	GUIDE, PROP SHF TRANS FLG .	3–J18,17
01–02	Y 6–SPD M/TRANS (MM6), MANUAL 6 SPD O/D TRANS, TREMEC (M12)	88894015	1	62.68	GUIDE, PROP SHF TRANS FLG .	3–J18,17
97–99	Y 6–SPD M/TRANS (MM6) ..	12456223	1	202.88	HOUSING, PROP SHF TRANS FLG BRG	3–J13,29
97–99	Y 4–SPD A/TRANS (M30) ...	12456228	1	202.88	HOUSING, PROP SHF TRANS FLG BRG	3–J10,39
00–01	Y 4–SPD A/TRANS (M30), 6–SPD M/TRANS (MM6) ...	88893997	1	202.88	HOUSING, PROP SHF TRANS FLG BRG	3–J18,24
00–02	Y 4–SPD A/TRANS (M30), 6–SPD M/TRANS (MM6) ...	88893997	1	202.88	HOUSING, PROP SHF TRANS FLG BRG	3–J18,24
01–02	Y MANUAL 6 SPD O/D TRANS, TREMEC (M12)	88893997	1	202.88	HOUSING, PROP SHF TRANS FLG BRG	3–J18,24
97–02	Y	12456214	1	98.32	INSULATOR, PROP SHF TRANS FLG	3–J10,28

cardiagn.com

5.556 BEARING – BOLT – BUSHING – GUIDE – HOUSING – INSULATOR – PLUG – RING – SEAL – SLINGER, Universal Joint Sleeve Yoke (Con't)

97–99	Y 4–SPD A/TRANS (M30) ...	88894019	3	3.38	PLUG, RR PROP SHF YOKE LUB HOLE	3–J18,26
00–02	Y	88894019	3	3.38	PLUG, RR PROP SHF YOKE LUB HOLE	3–J18,26
97–02	Y	12456209	1	3.38	RING, PROP SHF ENG FLG BRG RET	3–J10,20
97–99	Y	12456216	1	8.50	RING, PROP SHF TRANS FLG FRT BRG RET (FRT RET)	3–J10,32
97–99	Y	12456219	1	6.70	RING, PROP SHF TRANS FLG FRT BRG RET (RR RET)	3–J10,35
97–02	Y	12456222	1	3.30	RING, PROP SHF TRANS FLG RR BRG RET (INNER FACE)	3–J10,37
97–99	Y 4–SPD A/TRANS (M30) ...	88894017	1	27.50	RING, PROP SHF TRANS FLG RR BRG RET (BRG HOUSING TO TORQUE TUBE BELL HOUSING)	3–J10,37
97–99	Y 4–SPD A/TRANS (M30) ...	88894018	1	21.40	RING, PROP SHF TRANS FLG RR BRG RET (OUTER FACE)	3–J10,37
00–02	Y 4–SPD A/TRANS (M30), 6–SPD M/TRANS (MM6) ...	88894017	1	27.50	RING, PROP SHF TRANS FLG RR BRG RET (BRG HOUSING TO TORQUE TUBE BELL HOUSING)	3–J10,37
00–02	Y 4–SPD A/TRANS (M30), 6–SPD M/TRANS (MM6) ...	88894018	1	21.40	RING, PROP SHF TRANS FLG RR BRG RET (OUTER FACE)	3–J10,37
01–02	Y MANUAL 6 SPD O/D TRANS, TREMEC (M12)	88894017	1	27.50	RING, PROP SHF TRANS FLG RR BRG RET (BRG HOUSING TO TORQUE TUBE BELL HOUSING)	3–J10,37
01–02	Y MANUAL 6 SPD O/D TRANS, TREMEC (M12)	88894018	1	21.40	RING, PROP SHF TRANS FLG RR BRG RET (OUTER FACE)	3–J10,37
97–02	Y	12456203	1	3.38	SEAL, PROP SHF ENG FLG BRG (O RING)	3–J10,18
97–99	Y	12456218	1	3.38	SEAL, PROP SHF TRANS FLG FRT BRG (O RING)	3–J10,33
97–02	Y	12456220	2	3.38	SEAL, PROP SHF TRANS SHF RR BRG (O RING)	3–J10,38
97–02	Y	12456208	1	4.96	SLINGER, PROP SHF ENG FLG BRG	3–J10,19

5.560 PIN, Propeller Shaft Universal Joint Trunnion

97–99	Y 4–SPD A/TRANS (M30) ...	88894024	2	13.00	PIN, FRT PROP SHF BRG NUT COT	
00–02	Y	88894024	2	13.00	PIN, FRT PROP SHF BRG NUT COT	

5.586 BOLT – CLAMP – WASHER, Universal Joint Bearing and Flange

97–02	Y 4–SPD A/TRANS (M30) ...	12560341	1	3.38	BOLT, PROP SHF HUB CLA	3–J10,9
97–02	Y 4–SPD A/TRANS (M30) ...	12560419	1	35.37	CLAMP, PROP SHF HUB	3–J10,10
00–02	Y 6–SPD M/TRANS (MM6) ..	88894032	1	8.76	WASHER, PROP SHF	3–J18,22
01–02	Y MANUAL 6 SPD O/D TRANS, TREMEC (M12)	88894032	1	8.76	WASHER, PROP SHF	3–J18,22

5.803 WHEEL, Front or Rear

99	Y ALUM WHL (QF3)	9592613	2	496.80	WHEEL, FRT (SILVER) (17X8.5JA) (CODE: RLA) (ALUM 60MM O/S) .	3–K5,1
00	Y STYLED AL WHL (QD4) ...	9593798	2	545.70	WHEEL, FRT (SILVER) (17X8.5) (FRT) (CODE: RHH) (ALUM NON–DIRECTIONAL WHLS)) .	3–K8,1
00–02	Y ALUM WHL (QF5)	9594010	2	502.90	WHEEL, FRT (17X8.5)	3–K8,1
00–02	Y ALUM WHL (QG1)	9594181	2	470.30	WHEEL, FRT (17X8.5)	3–K8,1
01–02	Y 17 X 9.5 STYLED ALUM WHEEL (QE1)	9593804	2	545.70	WHEEL, FRT (17X9.5)	3–K11,15

cardiagn.com

5.803 WHEEL, Front or Rear (Con't)

02	Y SPECIAL PERFORMANCE ALUM WHEEL (P12)	9593804	2	545.70	WHEEL, FRT (17X9.5)	3–K11,15
99	Y ALUM WHL (QF3)	9592615	2	545.70	WHEEL, RR (SILVER) (18X9.5JA) (CODE: RLB) (ALUM 65MM O/S) .	3–K5,1
00	Y STYLED AL WHL (QD4) ...	9593800	2	561.60	WHEEL, RR (SILVER) (18X9.5) (RR) (CODE: RHH) (ALUM NON–DIRECTIONAL WHLS) ..	3–K8,1
00–02	Y ALUM WHL (QF5)	9594011	2	526.40	WHEEL, RR (18X9.5)	3–K8,1
00–02	Y ALUM WHL (QG1)	9594183	2	545.70	WHEEL, RR (18X9.5)	3–K8,1
01–02	Y 17 X 9.5 STYLED ALUM WHEEL (QE1)	9593806	2	561.60	WHEEL, RR (18X10.5)	3–K11,15
02	Y SPECIAL PERFORMANCE ALUM WHEEL (P12)	9593806	2	561.60	WHEEL, RR (18X10.5)	3–K11,15
97–99	Y STYLED AL WHL (QD4) ...	9592413	2	496.80	WHEEL, 17X8.5 (ALUMINUM, NON–DIRECTIONAL WHEELS) (SILVER) (17X8.5) (FRT) (CODE: RHH) (ALUM NON–DIRECTIONAL WHLS) ..	3–J26,1
98	Y	9593286	1	496.80	WHEEL, 17X8.5 (YELLOW)	3–K2,1
99–02	Y PAINTED AL WHL (N73) ...	9592638	2	983.30	WHEEL, 17X8.5 (BRONZE) (FRT) (MAGNESIUM)	3–J26,1
97–99	Y STYLED AL WHL (QD4) ...	9592414	2	545.70	WHEEL, 18X9.5 (SILVER) (18X9.5) (RR) (CODE: RHL) (NON–DIRECTIONAL WHLS) .	3–J26,1
98	Y STYLED PAINTED WHL (PA6)	9593290	4	496.80	WHEEL, 18X9.5 (YELLOW)	3–K2,1
99–02	Y PAINTED AL WHL (N73) ...	9592640	2	1030.20	WHEEL, 18X9.5 (BRONZE) (RR) (MAGNESIUM)	3–J26,1
	*EXPORT**********EXPORT**********EXPORT**********EXPORT**********EXPORT*					
97–98	Y MAGNESIUM WHL (N73) (EXPORT)	9592638	2	983.30	WHEEL, 17X8.5 (BRONZE) (FRT) (MAGNESIUM)	3–J26,1
97–98	Y MAGNESIUM WHL (N73) (EXPORT)	9592640	2	1030.20	WHEEL, 18X9.5 (BRONZE) (RR) (MAGNESIUM)	3–J26,1

5.805 WEIGHT, Wheel Balance

97–02	Y	9591361	AR	*1.65	WEIGHT, WHL BAL (1.0 OZ) (CODE–AW) (MT ON I/S ONLY)	3–J26,7
97–02	Y	9591362	AR	*1.65	WEIGHT, WHL BAL (1.25 OZ) (MT ON I/S ONLY)	3–J26,7
97–02	Y	9591363	AR	*1.65	WEIGHT, WHL BAL (1.5 OZ) (MT ON I/S ONLY)	3–J26,7
97–98	Y	9591364	AR	*1.65	WEIGHT, WHL BAL (1.75 OZ) (MT ON I/S ONLY)	3–J26,7
97–02	Y	9591365	AR	*2.25	WEIGHT, WHL BAL (2.0 OZ) (MT ON I/S ONLY)	3–J26,7
97–02	Y	9591366	AR	3.45	WEIGHT, WHL BAL (2.25 OZ) (ALUM WHL) (MT ON I/S ONLY)	3–J26,7
97–02	Y	9591367	AR	*2.25	WEIGHT, WHL BAL (2.5 OZ) (ALUM WHL) (MT ON I/S ONLY)	3–J26,7
97–98	Y	9591368	AR	3.45	WEIGHT, WHL BAL (2.75 OZ) (ALUM WHL)	3–J26,7
97–02	Y	9591582	AR	*1.30	WEIGHT, WHL BAL (0.5 OZ) (ALUM WHL)	3–J26,7
97–02	Y	9591583	AR	3.45	WEIGHT, WHL BAL (0.75 OZ) (ALUM WHL)	3–J26,7
97–02	Y	9591669	AR	*1.49	WEIGHT, WHL BAL (0.25 OZ)	3–J26,7
99	Y STYLED WHEEL ALUM (N66), STYLED AL WHL (QD4)	9591364	AR	*1.65	WEIGHT, WHL BAL (1.75 OZ) (MT ON I/S ONLY)	3–J26,7

cardiagn.com

5.805 WEIGHT, Wheel Balance (Con't)

99	Y MAGNESIUM WHL (N73), ALUM WHL (QF3)	9592827	AR	19.15	WEIGHT, WHL BAL (3.0 OZ) (SERVICES ALL WEIGHTS) (CUT AS REQUIRED) (MAG)	3–J26,12
00–02	Y ALUM WHL (QF5), (QG1) ..	9591364	AR	*1.65	WEIGHT, WHL BAL (1.75 OZ) (MT ON I/S ONLY)	3–J26,7
00–01	Y PAINTED AL WHL (N73) ...	9592827	AR	19.15	WEIGHT, WHL BAL (3.0 OZ) (SERVICES ALL WEIGHTS) (CUT AS REQUIRED) (MAG)	3–J26,12
	*EXPORT**********EXPORT**********EXPORT**********EXPORT**********EXPORT*					
97–98	Y MAGNESIUM WHL (N73) (EXPORT)	9592827	AR	19.15	WEIGHT, WHL BAL (3.0 OZ) (SERVICES ALL WEIGHTS) (CUT AS REQUIRED) (MAG)	3–J26,12

5.806 KNUCKLE – NUT, Rear Wheel

97–02	Y	10237238	LH	141.49	KNUCKLE, RR SUSP (COMMON KNUCKLE FOR RT/FRT & LT/RR) (06.020)	4–G8,37
97–02	Y	10237239	RH	141.49	KNUCKLE, RR SUSP (COMMON KNUCKLE FOR LT/FRT & RT/RR) (06.020)	4–G8,37
97–02	Y	3537772	2	*1.45	NUT, RR SUSP KNU (UPR BALL STUD, POSN #2) (M12.0X1.75X10.6) (08.917) ...	4–G8,11
97–02	Y	10282253	2	3.33	NUT, RR SUSP KNU (LWR BALL STUD, POSN #1) (M14X2.0 6H THD) (06.164)	4–G8,44

5.809 ROTOR, Front and Rear Wheel Brake

97–02	Y	10445856	RH	94.00	ROTOR, FRT BRK (1 PC CAST IRON) (AC–DELCO #177–853) .	3–H11,34
97–02	Y	10445857	LH	94.00	ROTOR, FRT BRK (1 PC CAST IRON) (AC–DELCO #177–852) .	3–H11,34
97–02	Y	10445858	RH	95.50	ROTOR, RR BRK (1 PC CAST IRON) (AC–DELCO #177–855) .	3–H11,22
97–02	Y	10445859	LH	95.50	ROTOR, RR BRK (1 PC CAST IRON) (AC–DELCO #177–854) .	3–H11,22

5.812 BOLT – STUD, Hub or Drum, Front and Rear Wheel

97–02	Y	10414261	6	3.33	BOLT, FRT WHL HUB	4–E4,21
97–02	Y	9592032	10	3.33	STUD, FRT WHL (SILVER) (PHOSPHATE ZINC ORGANIC–FLAKE FINISH) ...	
97–02	Y	0592032	10	3.33	STUD, RR WHL (M12X1.5X40, 28 THD, 16OD, 10.9, 7111M, PZO, DOG PT.) (SILVER) (PHOSPHATE ZINC ORGANIC–FLAKE FINISH)	

5.813 CAP – NUT, Hub Front and Rear

99	Y MAGNESIUM WHL (N73) ..	14102345	20	*1.40	CAP, WHL NUT (GRAY)	3–J26,11
00–02	Y	9593229	20	*1.40	CAP, WHL NUT (ARGENT)	3–K8,6
97–99	Y STYLED AL WHL (QD4) ...	22526184	20	*3.86	NUT, WHL (M12X1.5)	3–J26,6
98	Y STYLED PAINTED WHL (PA6)	22526184	20	*3.86	NUT, WHL (M12X1.5)	3–J26,6
99	Y MAGNESIUM WHL (N73) ..	10028615	20	*3.86	NUT, WHL (BLACK) (M12X1.5 W/M24X2.0 OTR THD)	3–J26,6
99	Y STYLED WHEEL ALUM (N66)	22526184	20	*3.86	NUT, WHL (M12X1.5)	3–J26,6

cardiagn.com

5.813 CAP – NUT, Hub Front and Rear (Con't)

00–02	Y	10028615	20	*3.86	NUT, WHL (BLACK) (M12X1.5 W/M24X2.0 OTR THD)	3–J26,6
	*EXPORT*********EXPORT*********EXPORT*********EXPORT*********EXPORT*					
97–98	Y MAGNESIUM WHL (N73) (EXPORT)	14102345	20	*1.40	CAP, WHL NUT (GRAY)	3–J26,11
97–98	Y MAGNESIUM WHL (N73) (EXPORT)	10028615	20	*3.86	NUT, WHL (W/EXT THREADS) (BLACK) (M12X1.5 W/M24X2.0 OTR THD)	3–J26,6

5.816 BOLT, Rear Axle Shaft Bearing

97–02	Y	10414261	6	3.33	BOLT, RR WHL HUB (05.812)	3–I7,8

5.822 SEAL, Rear Axle Shaft Bearing or Hub

97–02	Y	12369460	2	16.44	SEAL, R/AXL SHF BRG (05.430)	

5.855 BEARING, Rear Wheel

97–02	Y	7470571	2	668.00	BEARING, RR WHL (W/INTEGRAL SENSOR) (AC–DELCO #20–71)	3–G22,17

5.858 CAP, Wheel Trim

97–02	Y PAINTED AL WHL (N73)	9594097	4	11.45	CAP, HUB (BRONZE) (66.75MM) (CODE: TZR) (CORVETTE CTR CROSS FLAG) (W/O–RING SEAL)	3–J26,10
97–98	Y STYLED AL WHL (QD4)	12364359	4	28.00	CAP, HUB (SILVER) (CODE: TGU) (CORVETTE CTR)	3–J26,9
98	Y STYLED PAINTED WHL (PA6)	9593291	4	26.50	CAP, HUB (YELLOW) (CODE: RTA) (CORVETTE LOGO)	3–K2,10
99	Y STYLED AL WHL (QD4), ALUM WHL (QF3)	12364359	4	28.00	CAP, HUB (SILVER) (CODE: TGU) (CORVETTE CTR)	3–J26,9
00–02	Y ALUM WHL (QG1)	9593802	4	23.80	CAP, HUB (CORVETTE FLAGS) (PAINTED)	3–K8,9
00–02	Y ALUM WHL (QF5)	9594012	4	23.80	CAP, HUB (CORVETTE FLAGS) (POLISHED)	3–K8,9
01	Y 17 X 9.5 STYLED ALUM WHEEL (QE1)	9594328	4	23.80	CAP, HUB (GRAY)	3–K11,16
02	Y SPECIAL PERFORMANCE ALUM WHEEL (P12)	9594325	4	23.80	CAP, HUB (GRAY)	3–K11,16

5.875 STEM, Tire Valve and Cover Lock

97–02	Y	274288	4	*2.25	STEM, TIRE VLV (.453 HOLE, 1.25 LONG) (NON–CHROME)	3–J26,13

5.880 COMPRESSOR – STRAP, Tire

01–02	YY07–67 ACSRY KIT (V41)	88891850	1	304.00	COMPRESSOR, TIRE AIR	3–J24,3
01–02	YY37	9593933	1	304.00	COMPRESSOR, TIRE AIR	3–J24,1
01–02	YY37	9593935	1	515.00	COMPRESSOR, TIRE AIR (W/TIRE SEALER)	3–J24,1
01–02	YY37	88891850	1	304.00	COMPRESSOR, TIRE AIR	3–J24,3
01–02	Y37	10434786	1	3.45	STRAP, TIRE INFLR	3–J24,2

5.890 CAP – NUT – SENSOR – WASHER, Tire Pressure

97–99	Y	10268440	4	*1.42	CAP, TIRE PRESS IND SEN (VALVE STEM)	3–J26,5
00	Y (EXC VE1 (EXPORT)	10268440	4	*1.42	CAP, TIRE PRESS IND SEN (VALVE STEM)	3–J26,5

cardiagn.com

5.890 CAP – NUT – SENSOR – WASHER, Tire Pressure (Con't)

01	Y (1ST DES)	10268440	4	*1.42	CAP, TIRE PRESS IND SEN (VALVE STEM) (PLASTIC CAP, SECOND DESIGN SEE 25731359. (MUST USE ALUMINUM CAP ON SENSOR ASM 25731358))	3–J26,5
01–02	Y (EXC VE1 (EXPORT), (2ND DES)	25731359	4	3.33	CAP, TIRE PRESS IND SEN (ALUMINUM CAP, 1ST DESIGN SEE 25731359. (MUST USE ALUMINUM CAP ON SENSOR ASM 25731358))	3–K11,5
02	Y (1ST DES)	10268440	4	*1.42	CAP, TIRE PRESS IND SEN (VALVE STEM)	3–J26,5
02	YY07–67 (EXC VE1 (EXPORT)	25731359	1	3.33	CAP, TIRE PRESS IND SEN	3–K11,5
97–99	Y	10268439	4	*1.70	NUT, TIRE PRESS IND SEN	3–J26,4
00	Y (EXC VE1 (EXPORT)	10268439	4	*1.70	NUT, TIRE PRESS IND SEN	3–J26,4
01–02	YY07–67 (EXC COMM SYS, G.P.S. 1 (UE1)	25708165	4	3.33	NUT, TIRE PRESS IND SEN	3–K11,4
97–00	Y (EXC EUROPEAN PROVISIONS (VD1) (EXPORT), VE1 (EXPORT) ..	10438853	4	119.93	SENSOR, TIRE PRESS IND	3–J26,2
01–02	Y07–67 (EXC EUROPEAN PROVISIONS (VD1) (EXPORT), VE1 (EXPORT) ..	25648293	4	76.88	SENSOR, TIRE PRESS IND (SENSOR ASM W/O CAP, ALSO SEE P/N 25731358)	3–K11,2
01	Y07–67 (EXC EUROPEAN PROVISIONS (VD1) (EXPORT), VE1 (EXPORT) ..	25731358	4		SENSOR, TIRE PRESS IND (SENSOR ASM W/ ALUMINUM CAP (25731359), ALSO SEE P/N 25648293)	3–K11,2
02	Y07–67 (EXC EUROPEAN PROVISIONS (VD1) (EXPORT), VE1 (EXPORT) ..	25731358	4		SENSOR, TIRE PRESS IND	3–K11,2
97–00	Y (EXC EUROPEAN PROVISIONS (VD1) (EXPORT), VE1 (EXPORT) .	10268438	4	*1.70	WASHER, TIRE PRESS IND SEN (O–RING SEAL)	3–J26,3
	*EXPORT**********EXPORT**********EXPORT**********EXPORT**********EXPORT*					
97–00	Y EUROPEAN PROVISIONS (VD1) (EXPORT)	10316125	4		SENSOR, TIRE PRESS IND	3–J26,2
01–02	Y EUROPEAN PROVISIONS (VD1) (EXPORT)	10316125	4		SENSOR, TIRE PRESS IND (SENSOR ASM W/ ALUNINUM CAP (25731359), ALSO SEE P/N 10438854)	3–J26,2
97–00	Y EUROPEAN PROVISIONS (VD1) (EXPORT)	10268438	1	*1.70	WASHER, TIRE PRESS IND SEN (O–RING SEAL)	3–J26,3

cardiagn.com

21.340B LOCK PKG, Wheel & Spare Tire, (Non-Production)

97-02	Y	12497478	1	27.00	LOCK PKG, WHL (INSTALL .25) (M12 X 1.5 W/EXT THD) (INCLUDES 4 NUTS AND 1 KEY) (05.875)
97-02	Y	12497694	1	205.00	LOCK PKG, WHL (10-PACK OF LOCK PKG 12497478) (05.875)

0.666 FLYWHEEL - PLATE, Engine Crankshaft [8-CYLINDER]

97-00	Y 5.7G (LS1), 6-SPD M/TRANS (MM6)	12562765	1	420.00	FLYWHEEL, (W/CLU PRESS PLT)
01	Y 5.7S (LS6), MANUAL 6 SPD O/D TRANS, TREMEC (M12)	12570281	1	420.00	FLYWHEEL, (W/CLU PRESS PLT)
01	Y 5.7G (LS1), 6-SPD M/TRANS (MM6)	12570281	1	420.00	FLYWHEEL, (W/CLU PRESS PLT)
02	Y 5.7S (LS6), MANUAL 6 SPD O/D TRANS, TREMEC (M12)	12570806	1		FLYWHEEL, (W/CLU PRESS PLT)
02	Y 5.7G (LS1)	12572731	1		FLYWHEEL, (W/CLU PRESS PLT)
02	Y 5.7G (LS1), 4-SPD A/TRANS (M30)	12553054	1	103.00	FLYWHEEL, ENG (GM)
97-02	Y 4-SPD A/TRANS (M30)	12551134	1	31.00	PLATE, A/TRNS FLEX (04.116)
97-01	Y 5.7G (LS1), 4-SPD A/TRANS (M30)	12559038	1	189.00	PLATE, A/TRNS FLEX (W/HUB) (TO RR OF CRANKSHF) (MATCHED SET;INCLS: FLYWHL, R/GR, PROP SHF HUB)

0.669 BOLT - PIN - RETAINER - WEIGHT, Engine Flywheel [8-CYLINDER]

97-02	Y 4-SPD A/TRANS (M30)	01261968	8	*1.87	BOLT, A/TRNS FLEX PLT (M10X1.5X15 12.5 THD) (04.115) (AC-DELCO #1261968)
97-02	Y 5.7G (LS1)	12553332	6	*.86	BOLT, FLYWHL (HFH, M11X1.5X23.5, 21 THD, 22 O.D., 10 9, GM7114M, MACH W/SEALANT)
01-02	Y 5.7S (LS6)	12553332	6	*.86	BOLT, FLYWHL (HFH, M11X1.5X23.5, 21 THD. 22 O.D., 10.9, GM7114M, MACH. W/SEALANT)

0.683 BOLT - HOUSING - STUD, Engine Clutch Housing [8-CYLINDER]

97-02	Y 4-SPD A/TRANS (M30)	12551118	1	184.00	HOUSING, FLYWHL
97-00	Y 6-SPD M/TRANS (MM6)	12554980	1	184.00	HOUSING, FLYWHL
01-02	Y 6-SPD M/TRANS (MM6), MANUAL 6 SPD O/D TRANS, TREMEC (M12)	12554980	1	184.00	HOUSING, FLYWHL

0.686 PLUG, Engine Clutch Housing [8-CYLINDER]

97-02	Y 4-SPD A/TRANS (M30)	12557650	1	4.65	PLUG, FLYWHL HSG

0.785 BRACKET - CLIP - RETAINER, Hydraulic Clutch Reservoir [8-CYLINDER]

97-00	Y 6-SPD M/TRANS (MM6)	12553075	1	4.55	BRACKET, CLU M/CYL RSVR
01-02	Y 6-SPD M/TRANS (MM6), MANUAL 6 SPD O/D TRANS, TREMEC (M12)	12553075	1	4.55	BRACKET, CLU M/CYL RSVR
97-02	Y 6-SPD M/TRANS (MM6)	12558237	1	4.55	CLIP, CLU ACTR CYL HOSE (PRESS HOSE TO CLU HSG)
01-02	Y MANUAL 6 SPD O/D TRANS, TREMEC (M12)	12558237	1	4.55	CLIP, CLU ACTR CYL HOSE (PRESS HOSE TO CLU HSG)
97-02	Y 6-SPD M/TRANS (MM6)	20664092	2	*.54	RETAINER, CLU M/CYL RSVR BRKT (BLACK) (PUSH IN W/SCREW) (6.3MM DIA X 23MM) (01.276)

cardiagn.com

1.426 COVER – PAN, Engine Oil

97–00	Y 5.7G (LS1)	12551587	1	22.95	COVER, OIL PAN
02	Y 5.7G (LS1)	12551587	1	22.95	COVER, OIL PAN
02	Y 5.7S (LS6)	12551587	1	22.95	COVER, OIL PAN
97–99	Y 5.7G (LS1)	12561828	1	728.00	PAN, OIL (GULL–WING OIL PAN)
00–02	Y 5.7G (LS1)	12561828	1	728.00	PAN, OIL (WHEN USING 2–PIECE OIL PAN IN PLACE OF 1–PIECE OIL PAN, OIL LEVEL INDICATOR 12562468 MUST BE USED) (GULL–WING OIL PAN)
01–02	Y 5.7S (LS6)	12561828	1	728.00	PAN, OIL (WHEN USING 2–PIECE OIL PAN IN PLACE OF 1–PIECE OIL PAN, OIL LEVEL INDICATOR 12562468 MUST BE USED) (GULL–WING OIL PAN)

2.188 BOLT – CONNECTOR – CYLINDER KIT – HOUSING – NUT – RETAINER – SPRING – SWITCH – TUMBLER, Ignition Switch

97	Y	26036497	3	3.38	BOLT, IGN LK CYL CASE (M5X.8X15) (PAN HD TORX TAP) (06.760)
98	Y (EXC STRG COL (NP7) (EXPORT)	26036497	3	3.38	BOLT, IGN LK CYL CASE (M5X.8X15) (PAN HD TORX TAP) (06.760)
99–02	Y	26036497	3	3.38	BOLT, IGN LK CYL CASE (M5X.8X15) (PAN HD TORX TAP) (06.760)
97	Y	26036496	1	3.33	BOLT, IGN SW (M4.55 TAP X15) (EXT TORX FLG HD)
97–02	Y	10404727	1	13.93	HOUSING, IGN & START SW
97	Y	10237960	2	.46	NUT, IGN & START SW (M6X1.0) (10.512)
98–02	Y	10410398	2	*.51	NUT, IGN & START SW (M6X1.0 ITR "D" THD) (10.512)
97–02	Y	10246848	1	63.26	SWITCH, IGN & START (AC–DELCO #D1499C)

2.447 CONNECTOR – RELAY – RETAINER – SWITCH, Stop Lamp Switch

97–98	Y	12166226	1	44.37	CONNECTOR, SW–S/LP (2–WAY F) (W/LEADS & CAPACITOR)
97–02	Y	12117350	1	23.01	CONNECTOR, SW–S/LP & TCC (4–WAY F) (W/LEADS) (09.764) (AC–DELCO #PT483)
02	YY67 4–SPD A/TRANS (M30), A/C FRT AUTO/AUX CONT (CJ2), T&T WHL (N37), (EXC TAIL & S/LP (T89) (EXPORT)	12117350	1	23.01	CONNECTOR, SW–S/LP & TCC (4–WAY F) (W/LEADS) (09.764) (AC–DELCO #PT483)
97–02	Y	03537079	1	6.16	RETAINER, S/LP & TCC & CRCONT REL SW (AC–DELCO #3537079)
97–02	Y	11516210	1	21.90	SWITCH, ELEK BRK CONT BRK PED (W/ S/LP SW) (04.710)

2.480 HARNESS – WIRE, Chassis Wiring

97–02	Y 4–SPD A/TRANS (M30)	15320476	1	82.75	HARNESS, A/TRNS WRG (INCLS TCC SOL VLV) (AC–DELCO #15320476)
97–98	Y	12130416	1	131.58	HARNESS, F/PMP WRG
99	Y	12109531	1	131.58	HARNESS, F/PMP WRG
00–02	Y	12189905	1		HARNESS, F/PMP WRG (HARN TO JMPR)
00–02	Y	12189906	1		HARNESS, F/PMP WRG (HARN JMPR TO FUEL TK)
97	Y FRT FOG LP (T96), (EXC SIG & MKR LP (T90) (EXPORT)	12189881	1	301.92	HARNESS, FWD LP WRG

cardiagn.com

97	Y (EXC FRT FOG LP (T96)	12189883	1	944.44	HARNESS, FWD LP WRG
98	Y FRT FOG LP (T96), (EXC FRT ABS BRAKE LOC (JAG), SIG & MKR LP (T90) (EXPORT)	12163322	1	301.92	HARNESS, FWD LP WRG
98	Y (EXC FRT ABS BRAKE LOC (JAG), FRT FOG LP (T96)	12163324	1	301.92	HARNESS, FWD LP WRG
98	Y FRT ABS BRAKE LOC (JAG), FRT FOG LP (T96), (EXC ACTIVE BRAKE CTL (JL4), SIG & MKR LP (T90) (EXPORT)	12189515	1	301.92	HARNESS, FWD LP WRG
98	Y FRT ABS BRAKE LOC (JAG), (EXC ACTIVE BRAKE CTL (JL4), FRT FOG LP (T96)	12189517	1	301.92	HARNESS, FWD LP WRG
98	Y FRT ABS BRAKE LOC (JAG), ACTIVE BRAKE CTL (JL4), FRT FOG LP (T96), (EXC SIG & MKR LP (T90) (EXPORT)	12189518	1	364.74	HARNESS, FWD LP WRG
98	Y FRT ABS BRAKE LOC (JAG), ACTIVE BRAKE CTL (JL4), (EXC FRT FOG LP (T96)	12189520	1	666.86	HARNESS, FWD LP WRG
99	Y ACTIVE BRAKE CTL (JL4), FRT FOG LP (T96), (EXC SIG & MKR LP (T90) (EXPORT)	12189976	1	290.29	HARNESS, FWD LP WRG
99	Y07–67 FRT FOG LP (T96), (EXC ACTIVE BRAKE CTL (JL4), SIG & MKR LP (T90) (EXPORT)	12189973	1	301.92	HARNESS, FWD LP WRG
99	Y07–67 (EXC ACTIVE BRAKE CTL (JL4), SIG & MKR LP (T90) (EXPORT), FRT FOG LP (T96)	12189974	1	301.92	HARNESS, FWD LP WRG
99	Y07–67 ACTIVE BRAKE CTL (JL4), (EXC SIG & MKR LP (T90) (EXPORT), FRT FOG LP (T96)	12189978	1	300.90	HARNESS, FWD LP WRG
99	Y37 FRT FOG LP (T96), (EXC ACTIVE BRAKE CTL (JL4)	12189973	1	301.92	HARNESS, FWD LP WRG
99	Y37 P/S (VARIABLE) (NV7), (EXC ACTIVE BRAKE CTL (JL4), FRT FOG LP (T96)	12189974	1	301.92	HARNESS, FWD LP WRG
00	Y ACTIVE BRAKE CTL (JL4), (EXC SIG & MKR LP (T90) (EXPORT)	15329406	1	290.29	HARNESS, FWD LP WRG
00	Y07–67 (EXC ACTIVE BRAKE CTL (JL4), SIG & MKR LP (T90) (EXPORT)	15329403	1	301.92	HARNESS, FWD LP WRG
00	Y37 (EXC ACTIVE BRAKE CTL (JL4)	15329403	1	301.92	HARNESS, FWD LP WRG
01	YY07–67 ACTIVE BRAKE CTL (JL4), (EXC SIG & MKR LP (T90) (EXPORT), (2ND DES)	10310796	1	296.53	HARNESS, FWD LP WRG (2ND DSN USED ON/AFTER VIN #15107689, (1ST DSN 10448116))
01	YY07–67 ACTIVE BRAKE CTL (JL4), SIG & MKR LP (T90) (EXPORT), (2ND DES)	10310798	1	300.90	HARNESS, FWD LP WRG (2ND DSN USED ON/AFTER VIN #15107689, (1ST DSN 10448118))
01	YY07–67 ACTIVE BRAKE CTL (JL4), (EXC SIG & MKR LP (T90) (EXPORT), (1ST DES)	10448116	1	296.53	HARNESS, FWD LP WRG (1ST DSN USED B/4 VIN #15107689, (2ND DSN 10310796))
01	YY07–67 ACTIVE BRAKE CTL (JL4), SIG & MKR LP (T90) (EXPORT), (1ST DES)	10448118	1	300.90	HARNESS, FWD LP WRG (1ST DSN USED B/4 VIN #15107689, (2ND DSN 10310798))
01–02	YY37	10310796	1	296.53	HARNESS, FWD LP WRG
01	YY37	10448116	1	296.53	HARNESS, FWD LP WRG
02	YY07–67 (EXC SIG & MKR LP (T90) (EXPORT)	10310796	1	296.53	HARNESS, FWD LP WRG
97–99	Y (EXC SIG & MKR LP (T90) (EXPORT)	12163711	1	40.09	HARNESS, FWD LP WRG HARN EXTN

cardiagn.com

00–02	Y (EXC SIG & MKR LP (T90) (EXPORT)	15329462	1	40.09	HARNESS, FWD LP WRG HARN EXTN
97–02	Y	12163776	1	80.84	HARNESS, HAZARD LP & T/SIG LP FLSHR WRG
97	Y 4–SPD A/TRANS (M30), A/C FRT AUTO/AUX CONT (CJ2), (EXC TAIL & S/LP (T89) (EXPORT), CANADIAN (Z49)	12189868	1	1548.75	HARNESS, I/P WRG
97	Y 4–SPD A/TRANS (M30), A/C MAN CONT (C60), (EXC TAIL & S/LP (T89) (EXPORT), CANADIAN (Z49)	12189869	1	1257.59	HARNESS, I/P WRG
97	Y 6–SPD M/TRANS (MM6), A/C FRT AUTO/AUX CONT (CJ2), (EXC TAIL & S/LP (T89) (EXPORT), CANADIAN (Z49)	12189870	1	1257.59	HARNESS, I/P WRG
97	Y 6–SPD M/TRANS (MM6), A/C MAN CONT (C60), (EXC TAIL & S/LP (T89) (EXPORT), CANADIAN (Z49)	12189871	1	1257.59	HARNESS, I/P WRG
97	Y 4–SPD A/TRANS (M30), A/C FRT AUTO/AUX CONT (CJ2), CANADIAN (Z49), (EXC TAIL & S/LP (T89) (EXPORT), SPECIAL TAIL & S/LP (T93)	12189874	1	1257.59	HARNESS, I/P WRG
97	Y 4–SPD A/TRANS (M30), A/C MAN CONT (C60), CANADIAN (Z49), (EXC TAIL & S/LP (T89) (EXPORT), SPECIAL TAIL & S/LP (T93)	12189875	1	1257.59	HARNESS, I/P WRG
97	Y 6–SPD M/TRANS (MM6), A/C FRT AUTO/AUX CONT (CJ2), CANADIAN (Z49), (EXC TAIL & S/LP (T89) (EXPORT), SPECIAL TAIL & S/LP (T93)	12189876	1	1257.59	HARNESS, I/P WRG
97	Y 6–SPD M/TRANS (MM6), A/C MAN CONT (C60), CANADIAN (Z49), (EXC TAIL & S/LP (T89) (EXPORT), SPECIAL TAIL & S/LP (T93)	12189877	1	1257.59	HARNESS, I/P WRG
98	Y 6–SPD M/TRANS (MM6), A/C MAN CONT (C60), (EXC FRT ABS BRAKE LOC (JAG), TAIL & S/LP (T89) (EXPORT), CANADIAN (Z49)	12189816	1	1257.59	HARNESS, I/P WRG
98	Y07 4–SPD A/TRANS (M30), A/C FRT AUTO/AUX CONT (CJ2), (EXC FRT ABS BRAKE LOC (JAG), TAIL & S/LP (T89) (EXPORT), CANADIAN (Z49)	12189813	1	1257.59	HARNESS, I/P WRG
98	Y07 4–SPD A/TRANS (M30), A/C MAN CONT (C60), (EXC FRT ABS BRAKE LOC (JAG), TAIL & S/LP (T89) (EXPORT), CANADIAN (Z49)	12189814	1	1467.60	HARNESS, I/P WRG
98	Y07 6–SPD M/TRANS (MM6), A/C FRT AUTO/AUX CONT (CJ2), (EXC FRT ABS BRAKE LOC (JAG), TAIL & S/LP (T89) (EXPORT), CANADIAN (Z49)	12189815	1	1595.21	HARNESS, I/P WRG
98	Y07 4–SPD A/TRANS (M30), A/C FRT AUTO/AUX CONT (CJ2), CANADIAN (Z49), (EXC FRT ABS BRAKE LOC (JAG), TAIL & S/LP (T89) (EXPORT), SPECIAL TAIL & S/LP (T93)	12189819	1	1257.59	HARNESS, I/P WRG

cardiagn.com

98	Y07 4–SPD A/TRANS (M30), A/C MAN CONT (C60), CANADIAN (Z49), (EXC FRT ABS BRAKE LOC (JAG), TAIL & S/LP (T89) (EXPORT), SPECIAL TAIL & S/LP (T93)	12189820	1	1257.59	HARNESS, I/P WRG
98	Y07 6–SPD M/TRANS (MM6), A/C FRT AUTO/AUX CONT (CJ2), CANADIAN (Z49), (EXC FRT ABS BRAKE LOC (JAG), TAIL & S/LP (T89) (EXPORT), SPECIAL TAIL & S/LP (T93)	12189821	1	1257.59	HARNESS, I/P WRG
98	Y07 6–SPD M/TRANS (MM6), A/C MAN CONT (C60), CANADIAN (Z49), (EXC FRT ABS BRAKE LOC (JAG), TAIL & S/LP (T89) (EXPORT), SPECIAL TAIL & S/LP (T93)	12189822	1	1257.59	HARNESS, I/P WRG
98	Y07 4–SPD A/TRANS (M30), A/C FRT AUTO/AUX CONT (CJ2), ACTIVE BRAKE CTL (JL4), FRT ABS BRAKE LOC (JAG), (EXC TAIL & S/LP (T89) (EXPORT), CANADIAN (Z49)	12190400	1	1233.23	HARNESS, I/P WRG (MUST BE USED W/BODY CONT MDL LABELED 9359821 FOR 1998)
98	Y07 4–SPD A/TRANS (M30), A/C MAN CONT (C60), ACTIVE BRAKE CTL (JL4), FRT ABS BRAKE LOC (JAG), (EXC TAIL & S/LP (T89) (EXPORT), CANADIAN (Z49)	12190401	1	1233.23	HARNESS, I/P WRG (MUST BE USED W/BODY CONT MDL LABELED 9359821 FOR 1998)
98	Y07 6–SPD M/TRANS (MM6), A/C FRT AUTO/AUX CONT (CJ2), ACTIVE BRAKE CTL (JL4), FRT ABS BRAKE LOC (JAG), (EXC TAIL & S/LP (T89) (EXPORT), CANADIAN (Z49)	12190402	1	1233.23	HARNESS, I/P WRG (MUST BE USED W/BODY CONT MDL LABELED 9359821 FOR 1998)
98	Y07 6–SPD M/TRANS (MM6), A/C MAN CONT (C60), ACTIVE BRAKE CTL (JL4), FRT ABS BRAKE LOC (JAG), (EXC TAIL & S/LP (T89) (EXPORT), CANADIAN (Z49)	12190403	1	1233.23	HARNESS, I/P WRG (MUST BE USED W/BODY CONT MDL LABELED 9359821 FOR 1998)
98	Y07 4–SPD A/TRANS (M30), A/C FRT AUTO/AUX CONT (CJ2), FRT ABS BRAKE LOC (JAG), ACTIVE BRAKE CTL (JL4), CANADIAN (Z49), (EXC TAIL & S/LP (T89) (EXPORT), SPECIAL TAIL & S/LP (T93)	12190406	1	1233.23	HARNESS, I/P WRG (MUST BE USED W/BODY CONT MDL LABELED 9359821 FOR 1998)
98	Y07 4–SPD A/TRANS (M30), A/C MAN CONT (C60), FRT ABS BRAKE LOC (JAG), ACTIVE BRAKE CTL (JL4), CANADIAN (Z49), (EXC TAIL & S/LP (T89) (EXPORT), SPECIAL TAIL & S/LP (T93)	12190407	1	1233.23	HARNESS, I/P WRG (MUST BE USED W/BODY CONT MDL LABELED 9359821 FOR 1998)
98	Y07 6–SPD M/TRANS (MM6), A/C FRT AUTO/AUX CONT (CJ2), FRT ABS BRAKE LOC (JAG), ACTIVE BRAKE CTL (JL4), CANADIAN (Z49), (EXC TAIL & S/LP (T89) (EXPORT), SPECIAL TAIL & S/LP (T93)	12190408	1	1233.23	HARNESS, I/P WRG (MUST BE USED W/BODY CONT MDL LABELED 9359821 FOR 1998)

cardiagn.com

2.480 HARNESS – WIRE, Chassis Wiring(Con't)

98	Y07 6--SPD M/TRANS (MM6), A/C MAN CONT (C60), FRT ABS BRAKE LOC (JAG), ACTIVE BRAKE CTL (JL4), CANADIAN (Z49), (EXC TAIL & S/LP (T89) (EXPORT), SPECIAL TAIL & S/LP (T93)	12190409	1	1233.23	HARNESS, I/P WRG (MUST BE USED W/BODY CONT MDL LABELED 9359821 FOR 1998) .....
98	Y07 4-SPD A/TRANS (M30), A/C FRT AUTO/AUX CONT (CJ2), FRT ABS BRAKE LOC (JAG), (EXC ACTIVE BRAKE CTL (JL4), TAIL & S/LP (T89) (EXPORT), CANADIAN (Z49)	12190412	1	1233.23	HARNESS, I/P WRG (MUST BE USED W/BODY CONT MDL LABELED 9359821 FOR 1998) .....
98	Y07 4-SPD A/TRANS (M30), A/C MAN CONT (C60), FRT ABS BRAKE LOC (JAG), (EXC ACTIVE BRAKE CTL (JL4), TAIL & S/LP (T89) (EXPORT), CANADIAN (Z49)	12190413	1	1233.23	HARNESS, I/P WRG (MUST BE USED W/BODY CONT MDL LABELED 9359821 FOR 1998) .....
98	Y07 6--SPD M/TRANS (MM6), A/C FRT AUTO/AUX CONT (CJ2), FRT ABS BRAKE LOC (JAG), (EXC ACTIVE BRAKE CTL (JL4), TAIL & S/LP (T89) (EXPORT), CANADIAN (Z49)	12190414	1	1233.23	HARNESS, I/P WRG (MUST BE USED W/BODY CONT MDL LABELED 9359821 FOR 1998) .....
98	Y07 6--SPD M/TRANS (MM6), A/C MAN CONT (C60), FRT ABS BRAKE LOC (JAG), (EXC ACTIVE BRAKE CTL (JL4), TAIL & S/LP (T89) (EXPORT), CANADIAN (Z49)	12190415	1	1233.23	HARNESS, I/P WRG (MUST BE USED W/BODY CONT MDL LABELED 9359821 FOR 1998) .....
98	Y07 4--SPD A/TRANS (M30), A/C FRT AUTO/AUX CONT (CJ2), FRT ABS BRAKE LOC (JAG), CANADIAN (Z49), (EXC ACTIVE BRAKE CTL (JL4), TAIL & S/LP (T89) (EXPORT), SPECIAL TAIL & S/LP (T93)	12190416	1	1233.23	HARNESS, I/P WRG (MUST BE USED W/BODY CONT MDL LABELED 9359821 FOR 1998) .....
98	Y07 4--SPD A/TRANS (M30), A/C MAN CONT (C60), FRT ABS BRAKE LOC (JAG), CANADIAN (Z49), (EXC ACTIVE BRAKE CTL (JL4), TAIL & S/LP (T89) (EXPORT), SPECIAL TAIL & S/LP (T93)	12190410	1	1233.23	HARNESS, I/P WRG (MUST BE USED W/BODY CONT MDL LABELED 9359821 FOR 1998) .....
98	Y07 6--SPD M/TRANS (MM6), A/C FRT AUTO/AUX CONT (CJ2), FRT ABS BRAKE LOC (JAG), CANADIAN (Z49), (EXC ACTIVE BRAKE CTL (JL4), TAIL & S/LP (T89) (EXPORT), SPECIAL TAIL & S/LP (T93)	12190420	1	1233.23	HARNESS, I/P WRG (MUST BE USED W/BODY CONT MDL LABELED 9359821 FOR 1998)
98	Y07 6--SPD M/TRANS (MM6), A/C MAN CONT (C60), FRT ABS BRAKE LOC (JAG), CANADIAN (Z49), (EXC ACTIVE BRAKE CTL (JL4), TAIL & S/LP (T89) (EXPORT), SPECIAL TAIL & S/LP (T93)	12190421	1	1233.23	HARNESS, I/P WRG (MUST BE USED W/BODY CONT MDL LABELED 9359821 FOR 1998)
98	Y07 4--SPD A/TRANS (M30), A/C FRT AUTO/AUX CONT (CJ2), (EXC FRT ABS BRAKE LOC (JAG), TAIL & S/LP (T89) (EXPORT), CANADIAN (Z49)	12190001	1	1257.50	HARNESS, I/P WRG

cardiagn.com

2.480 HARNESS – WIRE, Chassis Wiring(Con't)

98	Y67 6–SPD M/TRANS (MM6), A/C FRT AUTO/AUX CONT (CJ2), (EXC FRT ABS BRAKE LOC (JAG), TAIL & S/LP (T89) (EXPORT), CANADIAN (Z49)	12189802	1	1257.59	HARNESS, I/P WRG
98	Y67 4–SPD A/TRANS (M30), A/C MAN CONT (C60), (EXC FRT ABS BRAKE LOC (JAG), TAIL & S/LP (T89) (EXPORT), CANADIAN (Z49)	12189803	1	1257.59	HARNESS, I/P WRG
98	Y67 6–SPD M/TRANS (MM6), A/C MAN CONT (C60), (EXC FRT ABS BRAKE LOC (JAG), TAIL & S/LP (T89) (EXPORT), CANADIAN (Z49)	12189804	1	1257.59	HARNESS, I/P WRG
98	Y67 4–SPD A/TRANS (M30), A/C FRT AUTO/AUX CONT (CJ2), CANADIAN (Z49), (EXC FRT ABS BRAKE LOC (JAG), TAIL & S/LP (T89) (EXPORT), SPECIAL TAIL & S/LP (T93)	12189805	1	1257.59	HARNESS, I/P WRG
98	Y67 4–SPD A/TRANS (M30), A/C MAN CONT (C60), CANADIAN (Z49), (EXC FRT ABS BRAKE LOC (JAG), TAIL & S/LP (T89) (EXPORT), SPECIAL TAIL & S/LP (T93)	12189806	1	1257.59	HARNESS, I/P WRG
98	Y67 6–SPD M/TRANS (MM6), A/C FRT AUTO/AUX CONT (CJ2), CANADIAN (Z49), (EXC FRT ABS BRAKE LOC (JAG), TAIL & S/LP (T89) (EXPORT), SPECIAL TAIL & S/LP (T93)	12189807	1	1257.59	HARNESS, I/P WRG
98	Y67 6–SPD M/TRANS (MM6), A/C MAN CONT (C60), CANADIAN (Z49), (EXC FRT ABS BRAKE LOC (JAG), TAIL & S/LP (T89) (EXPORT), SPECIAL TAIL & S/LP (T93)	12189808	1	1257.59	HARNESS, I/P WRG
98	Y67 4–SPD A/TRANS (M30), A/C FRT AUTO/AUX CONT (CJ2), FRT ABS BRAKE LOC (JAG), (EXC TAIL & S/LP (T89) (EXPORT), CANADIAN (Z49)	12189980	1	1233.23	HARNESS, I/P WRG (MUST BE USED W/BODY CONT MDL LABELED 0369821 FOR 1998)
98	Y67 6–SPD M/TRANS (MM6), A/C FRT AUTO/AUX CONT (CJ2), FRT ABS BRAKE LOC (JAG), (EXC TAIL & S/LP (T89) (EXPORT), CANADIAN (Z49)	12189981	1	1233.23	HARNESS, I/P WRG (MUST BE USED W/BODY CONT MDL LABELED 0369821 FOR 1998)
98	Y67 4–SPD A/TRANS (M30), A/C MAN CONT (C60), FRT ABS BRAKE LOC (JAG), (EXC TAIL & S/LP (T89) (EXPORT) CANADIAN (Z49)	12189982	1	1233.23	HARNESS, I/P WRG (MUST BE USED W/BODY CONT MDL LABELED 0369821 FOR 1998)
98	Y67 6–SPD M/TRANS (MM6), A/C MAN CONT (C60) FRT ABS BRAKE LOC (JAG) (EXC TAIL & S/LP (T89) (EXPORT) CANADIAN (Z49)	12189983	1	1233.23	HARNESS, I/P WRG (MUST BE USED W/BODY CONT MDL LABELED 0369821 FOR 1998)
98	Y67 4–SPD A/TRANS (M30) A/C FRT AUTO/AUX CONT (CJ2) CANADIAN (Z49) FRT ABS BRAKE LOC (JAG) (EXC TAIL & S/LP (T89) (EXPORT)	12189984	1	1233.23	HARNESS, I/P WRG (MUST BE USED W/BODY CONT MDL LABELED 0369821 FOR 1998)

cardiagn.com

2.480 HARNESS – WIRE, Chassis Wiring(Con't)

98	Y67 4--SPD A/TRANS (M30), A/C MAN CONT (C60), CANADIAN (Z49), FRT ABS BRAKE LOC (JAG), (EXC TAIL & S/LP (T89) (EXPORT) .	12189985	1	1233.23	HARNESS, I/P WRG (MUST BE USED W/BODY CONT MDL LABELED 9359821 FOR 1998) .....
98	Y67 6-SPD M/TRANS (MM6), A/C FRT AUTO/AUX CONT (CJ2), FRT ABS BRAKE LOC (JAG), CANADIAN (Z49), (EXC TAIL & S/LP (T89) (EXPORT)	12189986	1	1233.23	HARNESS, I/P WRG (MUST BE USED W/BODY CONT MDL LABELED 9359821 FOR 1998) ....
98	Y67 6-SPD M/TRANS (MM6), A/C MAN CONT (C60), CANADIAN (Z49), FRT ABS BRAKE LOC (JAG), (EXC TAIL & S/LP (T89) (EXPORT) .	12189987	1	1233.23	HARNESS, I/P WRG (MUST BE USED W/BODY CONT MDL LABELED 9359821 FOR 1998) .....
99	Y07 4-SPD A/TRANS (M30), A/C FRT AUTO/AUX CONT (CJ2), ACTIVE BRAKE CTL (JL4), (EXC T&T WHL (N37), TAIL & S/LP (T89) (EXPORT)	12190424	1	1233.23	HARNESS, I/P WRG (MAY REQUIRE 12450028 I/P COMPT LP & 12102616 PWR RCPT CONN) .....
99-00	Y07 4-SPD A/TRANS (M30), A/C FRT AUTO/AUX CONT (CJ2), ACTIVE BRAKE CTL (JL4), T&T WHL (N37), (EXC TAIL & S/LP (T89) (EXPORT)	12190424	1	1233.23	HARNESS, I/P WRG (MAY REQUIRE 12450028 I/P COMPT LP & 12102616 PWR RCPT CONN) .....
99-00	Y07 4-SPD A/TRANS (M30), A/C MAN CONT (C60), ACTIVE BRAKE CTL (JL4), (EXC T&T WHL (N37), TAIL & S/LP (T89) (EXPORT)	12190427	1	1233.23	HARNESS, I/P WRG (MAY REQUIRE 12450028 I/P COMPT LP & 12102616 PWR RCPT CONN) ....
99	Y07 6-SPD M/TRANS (MM6), A/C FRT AUTO/AUX CONT (CJ2), ACTIVE BRAKE CTL (JL4), T&T WHL (N37), (EXC TAIL & S/LP (T89) (EXPORT)	12190429	1	1233.23	HARNESS, I/P WRG (MAY REQUIRE 12450028 I/P COMPT LP & 12102616 PWR RCPT CONN) . ...
99-00	Y07 6-SPD M/TRANS (MM6), A/C MAN CONT (C60), ACTIVE BRAKE CTL (JL4), (EXC T&T WHL (N37), TAIL & S/LP (T89) (EXPORT)	12190432	1	1233.23	HARNESS, I/P WRG (MAY REQUIRE 12450028 I/P COMPT LP & 12102616 PWR RCPT CONN) ....
99-00	Y07 4-SPD A/TRANS (M30), A/C FRT AUTO/AUX CONT (CJ2), T&T WHL (N37), (EXC ACTIVE BRAKE CTL (JL4), TAIL & S/LP (T89) (EXPORT)	12190434	1	1233.23	HARNESS, I/P WRG (MAY REQUIRE 12450028 I/P COMPT LP & 12102616 PWR RCPT CONN) . . ..
99-00	Y07 4-SPD A/TRANS (M30), A/C MAN CONT (C60), (EXC ACTIVE BRAKE CTL (JL4), T&T WHL (N37), TAIL & S/LP (T89) (EXPORT) .	12190437	1	1233.23	HARNESS, I/P WRG (MAY REQUIRE 12450028 I/P COMPT LP & 12102616 PWR RCPT CONN) .
99-00	Y07 6-SPD M/TRANS (MM6), A/C FRT AUTO/AUX CONT (CJ2), T&T WHL (N37), (EXC ACTIVE BRAKE CTL (JL4), TAIL & S/LP (T89) (EXPORT) . .	12190439	1	1233.23	HARNESS, I/P WRG (MAY REQUIRE 12450028 I/P COMPT LP & 12102616 PWR RCPT CONN)
99-00	Y07 6-SPD M/TRANS (MM6), A/C MAN CONT (C60), (EXC ACTIVE BRAKE CTL (JL4), T&T WHL (N37), TAIL & S/LP (T89) (EXPORT)	12190442	1	1233.23	HARNESS, I/P WRG (MAY REQUIRE 12450028 I/P COMPT LP & 12102616 PWR RCPT CONN)
99-00	Y37 4-SPD A/TRANS (M30), 4 SPKR SYS (UQ5), (EXC ACTIVE BRAKE CTL (JL4)	16329320	1	1233.23	HARNESS, I/P WRG (MAY REQUIRE 12450028 I/P COMPT LP & 12102616 PWR RCPT CONN)
99-00	Y37 4-SPD A/TRANS (M30), SPEAKER SYSTEM 6 (UZ6) (EXC ACTIVE BRAKE CTL (JL4)	16329321	1	1233.23	HARNESS, I/P WRG (MAY REQUIRE 12450028 I/P COMPT LP & 12102616 PWR RCPT CONN)

cardiagn.com

2.480 HARNESS – WIRE, Chassis Wiring(Con't)

99–00	Y37 6–SPD M/TRANS (MM6), 4 SPKR SYS (UQ5), (EXC ACTIVE BRAKE CTL (JL4)	15329322	1	1233.23	HARNESS, I/P WRG (MAY REQUIRE 12450028 I/P COMPT LP & 12102616 PWR RCPT CONN) .....
99–00	Y37 6–SPD M/TRANS (MM6), SPEAKER SYSTEM 6 (UZ6), (EXC ACTIVE BRAKE CTL (JL4)	15329323	1	1233.23	HARNESS, I/P WRG (MAY REQUIRE 12450028 I/P COMPT LP & 12102616 PWR RCPT CONN) .....
99	Y37 6–SPD M/TRANS (MM6), A/C MAN CONT (C60), ACTIVE BRAKE CTL (JL4), 4 SPKR SYS (UQ5)	15329332	1	1208.87	HARNESS, I/P WRG .....
99	Y37 6–SPD M/TRANS (MM6), A/C MAN CONT (C60), ACTIVE BRAKE CTL (JL4), SPEAKER SYSTEM 6 (UZ6)	15329333	1	1208.87	HARNESS, I/P WRG .....
99–00	Y67 4–SPD A/TRANS (M30), A/C FRT AUTO/AUX CONT (CJ2), T&T WHL (N37), (EXC TAIL & S/LP (T89) (EXPORT)	12190444	1	1233.23	HARNESS, I/P WRG (MAY REQUIRE 12450028 I/P COMPT LP & 12102616 PWR RCPT CONN) .....
99–00	Y67 4–SPD A/TRANS (M30), A/C MAN CONT (C60), (EXC T&T WHL (N37), TAIL & S/LP (T89) (EXPORT)	12190447	1	1233.23	HARNESS, I/P WRG (MAY REQUIRE 12450028 I/P COMPT LP & 12102616 PWR RCPT CONN) .....
99–00	Y67 6–SPD M/TRANS (MM6), A/C FRT AUTO/AUX CONT (CJ2), T&T WHL (N37), (EXC TAIL & S/LP (T89) (EXPORT)	12190449	1	1233.23	HARNESS, I/P WRG (MAY REQUIRE 12450028 I/P COMPT LP & 12102616 PWR RCPT CONN) .....
99–00	Y67 6–SPD M/TRANS (MM6), A/C MAN CONT (C60), (EXC T&T WHL (N37), TAIL & S/LP (T89) (EXPORT)	12190452	1	1233.23	HARNESS, I/P WRG (MAY REQUIRE 12450028 I/P COMPT LP & 12102616 PWR RCPT CONN) .....
00	YY07 6–SPD M/TRANS (MM6), A/C FRT AUTO/AUX CONT (CJ2), (EXC ACTIVE BRAKE CTL (JL4), T&T WHL (N37), TAIL & S/LP (T89) (EXPORT)	10442572	1	1233.23	HARNESS, I/P WRG .....
00	Y07 4–SPD A/TRANS (M30), A/C FRT AUTO/AUX CONT (CJ2), ACTIVE BRAKE CTL (JL4), T&T WHL (N37), (EXC TAIL & S/LP (T89) (EXPORT)	10442580	1	1233.23	HARNESS, I/P WRG (INCLUDES PROVISIONS FOR MAN. SUPPRESSION SYS INCLUDES HARN INLINE P/DOOR) ...
00	Y07 4–SPD A/TRANS (M30), A/C MAN CONT (C60), ACTIVE BRAKE CTL (JL4), (EXC T&T WHL (N37), TAIL & S/LP (T89) (EXPORT)	10442562	1	1233.23	HARNESS, I/P WRG (INCLUDES PROVISIONS FOR MAN SUPPRESSION SYS INCLUDES HARN INLINE P/DOOR)
00	Y07 6–SPD M/TRANS (MM6), A/C FRT AUTO/AUX CONT (CJ2), ACTIVE BRAKE CTL (JL4) (EXC TAIL & S/LP (T89) (EXPORT)	10442563	1	1233.23	HARNESS, I/P WRG (INCLUDES PROVISIONS FOR MAN SUPPRESSION SYS INCLUDES HARN INLINE P/DOOR)
00	Y07 6–SPD M/TRANS (MM6), A/C MAN CONT (C60), ACTIVE BRAKE CTL (JL4), (EXC T&T WHL (N37)	10442566	1	1233.23	HARNESS, I/P WRG (INCLUDES PROVISIONS FOR MAN SUPPRESSION SYS INCLUDES HARN INLINE P/DOOR)
00	Y07 4–SPD A/TRANS (M30), A/C FRT AUTO/AUX CONT (CJ2), (EXC ACTIVE BRAKE CTL (JL4) TAIL & S/LP (T89) (EXPORT)	10442567	1	1233.23	HARNESS, I/P WRG (INCLUDES PROVISIONS FOR MAN SUPPRESSION SYS INCLUDES HARN INLINE P/DOOR)
00	Y07 4–SPD A/TRANS (M30), A/C MAN CONT (C60), (EXC ACTIVE BRAKE CTL (JL4) T&T WHL (N37)	10442570	1	1233.23	HARNESS, I/P WRG (INCLUDES PROVISIONS FOR MAN SUPPRESSION SYS INCLUDES HARN INLINE P/DOOR)
00	Y07 6–SPD M/TRANS (MM6), A/C FRT AUTO/AUX CONT (CJ2), (EXC ACTIVE BRAKE CTL (JL4), TAIL & S/LP (T89) (EXPORT)	10442571	1	1233.23	HARNESS, I/P WRG (INCLUDES PROVISIONS FOR MAN SUPPRESSION SYS INCLUDES HARN INLINE P/DOOR)

cardiagn.com

2.480 HARNESS – WIRE, Chassis Wiring(Con't)

00	Y07 6-SPD M/TRANS (MM6), A/C MAN CONT (C60), (EXC ACTIVE BRAKE CTL (JL4), T&T WHL (N37)	10442574	1	1233.23	HARNESS, I/P WRG (INCLUDES PROVISIONS FOR MAN. SUPPRESSION SYS. INCLUDES HARN.INLINE P/DOOR) .....
00	Y37 4-SPD A/TRANS (M30), A/C FRT AUTO/AUX CONT (CJ2), (EXC T&T WHL (N37), TAIL & S/LP (T89) (EXPORT)	10442575	1	1233.23	HARNESS, I/P WRG (INCLUDES PROVISIONS FOR MAN. SUPPRESSION SYS. INCLUDES HARN.INLINE P/DOOR) .....
00	Y37 6-SPD M/TRANS (MM6), A/C FRT AUTO/AUX CONT (CJ2), (EXC T&T WHL (N37), TAIL & S/LP (T89) (EXPORT)	10442579	1	1233.23	HARNESS, I/P WRG (INCLUDES PROVISIONS FOR MAN. SUPPRESSION SYS. INCLUDES HARN.INLINE P/DOOR) .....
00	Y37 6-SPD M/TRANS (MM6), A/C MAN CONT (C60), SPEAKER SYSTEM 3 (UZ6), (EXC ACTIVE BRAKE CTL (JL4)	10442582	1	1233.23	HARNESS, I/P WRG (INCLUDES PROVISIONS FOR MAN. SUPPRESSION SYS. INCLUDES HARN.INLINE P/DOOR) .....
00	Y37 6-SPD M/TRANS (MM6), A/C MAN CONT (C60), 4 SPKR SYS (UQ5), (EXC ACTIVE BRAKE CTL (JL4)	10442583	1	1233.23	HARNESS, I/P WRG (INCLUDES PROVISIONS FOR MAN. SUPPRESSION SYS. INCLUDES HARN.INLINE P/DOOR) .....
00	Y37 6-SPD M/TRANS (MM6), A/C MAN CONT (C60), ACTIVE BRAKE CTL (JL4), 4 SPKR SYS (UQ5)	10442585	1	1233.23	HARNESS, I/P WRG (INCLUDES PROVISIONS FOR MAN. SUPPRESSION SYS. INCLUDES HARN.INLINE P/DOOR) .....
00	Y37 6-SPD M/TRANS (MM6), A/C MAN CONT (C60), ACTIVE BRAKE CTL (JL4), SPEAKER SYSTEM 6 (UZ6)	10442586	1	1233.23	HARNESS, I/P WRG (INCLUDES PROVISIONS FOR MAN. SUPPRESSION SYS. INCLUDES HARN INLINE P/DOOR) .....
00	Y67 4-SPD A/TRANS (M30), A/C FRT AUTO/AUX CONT (CJ2), (EXC TAIL & S/LP (T89) (EXPORT)	10442575	1	1233.23	HARNESS, I/P WRG (INCLUDES PROVISIONS FOR MAN. SUPPRESSION SYS INCLUDES HARN.INLINE P/DOOR) .....
00	Y67 4-SPD A/TRANS (M30), A/C MAN CONT (C60), (EXC T&T WHL (N37)	10442576	1	1233.23	HARNESS, I/P WRG (INCLUDES PROVISIONS FOR MAN SUPPRESSION SYS INCLUDES HARN INLINE P/DOOR) ..
00	Y67 6-SPD M/TRANS (MM6), A/C MAN CONT (C60), (EXC T&T WHL (N37)	10442582	1	1233.23	HARNESS, I/P WRG (INCLUDES PROVISIONS FOR MAN. SUPPRESSION SYS INCLUDES HARN INLINE P/DOOR) .
01-02	YY37 A/C FRT AUTO/AUX CONT (CJ2)	10310780	1	1233.23	HARNESS, I/P WRG
01	YY67 6-SPD M/TRANS (MM6), A/C MAN CONT (C60), (EXC T&T WHL (N37), (2ND DES)	10310790	1	1233.23	HARNESS, I/P WRG (2ND DSN USED ON/AFTER VIN #16107680, (1ST DSN 10448100))
01	Y07 4-SPD A/TRANS (M30), A/C FRT AUTO/AUX CONT (CJ2), ACTIVE BRAKE CTL (JL4), (EXC TAIL & S/LP (T89) (EXPORT)	10310770	1	1233.23	HARNESS, I/P WRG
01	Y07 4-SPD A/TRANS (M30) A/C MAN CONT (C60) ACTIVE BRAKE CTL (JL4), (EXC T&T WHL (N37) (2ND DES)	10310780	1	1233.23	HARNESS, I/P WRG (2ND DSN USED ON/AFTER VIN #16107680 (1ST DSN 10448088))
01	Y07 6-SPD M/TRANS (MM6) A/C FRT AUTO AUX CONT (CJ2) ACTIVE BRAKE CTL (JL4) (EXC TAIL & S/LP (T89) (EXPORT) (2ND DES)	10310781	1	1233.23	HARNESS, I/P WRG (2ND DSN USED ON/AFTER VIN #16107680 (1ST DSN 10448089))

cardiagn.com

2.480 HARNESS – WIRE, Chassis Wiring(Con't)

01	Y07 6--SPD M/TRANS (MM6), A/C MAN CONT (C60), ACTIVE BRAKE CTL (JL4), (EXC T&T WHL (N37), (2ND DES)	10310782	1	1233.23	HARNESS, I/P WRG (2ND DSN USED ON/AFTER VIN #15107689, (1ST DSN 10443090))
01	Y07 4–SPD A/TRANS (M30), A/C FRT AUTO/AUX CONT (CJ2), ACTIVE BRAKE CTL (JL4), (EXC T&T WHL (N37), TAIL & S/LP (T89) (EXPORT), (1ST DES)	10448087	1	1233.23	HARNESS, I/P WRG (1ST DSN USED B/4 VIN #15107689, (2ND DSN 10310779))
01	Y07 4–SPD A/TRANS (M30), A/C MAN CONT (C60), ACTIVE BRAKE CTL (JL4), (EXC T&T WHL (N37), (1ST DES)	10448088	1	1233.23	HARNESS, I/P WRG (1ST DSN USED B/4 VIN #15107689, (2ND DSN 10310780))
01	Y07 6–SPD M/TRANS (MM6), A/C FRT AUTO/AUX CONT (CJ2), ACTIVE BRAKE CTL (JL4), T&T WHL (N37), (EXC TAIL & S/LP (T89) (EXPORT), (1ST DES)	10448089	1	1233.23	HARNESS, I/P WRG (1ST DSN USED B/4 VIN #15107689, (2ND DSN 10310781))
01	Y07 6–SPD M/TRANS (MM6), A/C MAN CONT (C60), ACTIVE BRAKE CTL (JL4), (EXC T&T WHL (N37), (1ST DES)	10448090	1	1233.23	HARNESS, I/P WRG (1ST DSN USED B/4 VIN #15107689, (2ND DSN 10310782))
01	Y37 A/C FRT AUTO/AUX CONT (CJ2)	10448105	1	1233.23	HARNESS, I/P WRG
01	Y67 4–SPD A/TRANS (M30), A/C FRT AUTO/AUX CONT (CJ2), (EXC TAIL & S/LP (T89) (EXPORT), (2ND DES)	10310787	1	1233.23	HARNESS, I/P WRG (2ND DSN USED ON/AFTER VIN #15107689, (1ST DSN 10448103))
01	Y67 4--SPD A/TRANS (M30), A/C MAN CONT (C60), (EXC T&T WHL (N37), (2ND DES)	10310788	1	1233.23	HARNESS, I/P WRG (2ND DSN USED ON/AFTER VIN #15107689, (1ST DSN 10448104))
01	Y67 6--SPD M/TRANS (MM6), A/C FRT AUTO/AUX CONT (CJ2), (EXC TAIL & S/LP (T89) (EXPORT), (2ND DES)	10310789	1	1233.23	HARNESS, I/P WRG (2ND DSN USED ON/AFTER VIN #15107689, (1ST DSN 10448105))
01	Y67 4--SPD A/TRANS (M30), A/C FRT AUTO/AUX CONT (CJ2), T&T WHL (N37) (EXC TAIL & S/LP (T89) (EXPORT), (1ST DES)	10448103	1	1233.23	HARNESS, I/P WRG (1ST DSN USED B/4 VIN #15107689, (2ND DSN 10310787))
01	Y67 4--SPD A/TRANS (M30) A/C MAN CONT (C60), (EXC T&T WHL (N37) (1ST DES)	10448104	1	1233.23	HARNESS, I/P WRG (1ST DSN USED B/4 VIN #15107689, (2ND DSN 10310788))
01	Y67 6--SPD M/TRANS (MM6), A/C FRT AUTO/AUX CONT (CJ2), T&T WHL (N37), (EXC TAIL & S/LP (T89) (EXPORT), (1ST DES)	10448105	1	1233.23	HARNESS, I/P WRG (1ST DSN USED B/4 VIN #15107689, (2ND DSN 10310789))
01	Y67 6--SPD M/TRANS (MM6), A/C MAN CONT (C60) (EXC T&T WHL (N37) (1ST DES)	10448106	1	1233.23	HARNESS, I/P WRG (1ST DSN USED B/4 VIN #15107689 (2ND DSN 10310790))
02	YY07 4--SPD A/TRANS (M30) A/C FRT AUTO/AUX CONT (CJ2), (EXC TAIL & S/LP (T89) (EXPORT)	10310779	1	1233.23	HARNESS, I/P WRG
02	YY07 4--SPD A/TRANS (M30), A/C MAN CONT (C60) (EXC T&T WHL (N37)	10310780	1	1233.23	HARNESS, I/P WRG
02	YY07 4--SPD A/TRANS (M30) A/C MAN CONT (C60) (EXC T&T WHL (N37)	10310788	1	1233.23	HARNESS, I/P WRG
02	YY07 6--SPD M/TRANS (MM6) A/C MAN CONT (C60) (EXC T&T WHL (N37)	10310790	1	1233.23	HARNESS, I/P WRG

cardiagn.com

2.480 HARNESS – WIRE, Chassis Wiring(Con't)

02	Y07 6-SPD M/TRANS (MM6), A/C FRT AUTO/AUX CONT (CJ2), (EXC TAIL & S/LP (T89) (EXPORT)	10310781	1	1233.23	HARNESS, I/P WRG .....
02	Y07 6-SPD M/TRANS (MM6), A/C MAN CONT (C60), (EXC T&T WHL (N37)	10310782	1	1233.23	HARNESS, I/P WRG .....
02	Y67 4-SPD A/TRANS (M30), A/C FRT AUTO/AUX CONT (CJ2), (EXC TAIL & S/LP (T89) (EXPORT)	10310787	1	1233.23	HARNESS, I/P WRG .....
02	Y67 6-SPD M/TRANS (MM6), A/C FRT AUTO/AUX CONT (CJ2), (EXC TAIL & S/LP (T89) (EXPORT)	10310789	1	1233.23	HARNESS, I/P WRG .....
97	Y 4-SPD A/TRANS (M30), (EXC CHASSIS, REALTIME DAMPING (F46)	12163195	1	375.00	HARNESS, TRANS WRG (AC-DELCO #12163195) .....
97	Y 6-SPD M/TRANS (MM6), (EXC CHASSIS, REALTIME DAMPING (F46)	12163196	1	375.00	HARNESS, TRANS WRG (AC-DELCO #12163196) ....
97	Y 4-SPD A/TRANS (M30), CHASSIS, REALTIME DAMPING (F46)	12163705	1	628.00	HARNESS, TRANS WRG (AC-DELCO #12163705) ....
97	Y 6-SPD M/TRANS (MM6), CHASSIS, REALTIME DAMPING (F46)	12163706	1	628.00	HARNESS, TRANS WRG (AC-DELCO #12163706) ... .
98	Y 4-SPD A/TRANS (M30), (EXC CHASSIS, REALTIME DAMPING (F46), FRT ABS BRAKE LOC (JAG)	12163195	1	375.00	HARNESS, TRANS WRG (AC-DELCO #12163195) ....
98	Y 6-SPD M/TRANS (MM6), (EXC CHASSIS, REALTIME DAMPING (F46), FRT ABS BRAKE LOC (JAG), EUROPEAN PROVISIONS (VD1) (EXPORT)	12163196	1	375.00	HARNESS, TRANS WRG (AC-DELCO #12163196) . ...
98	Y 4-SPD A/TRANS (M30), CHASSIS, REALTIME DAMPING (F46), (EXC FRT ABS BRAKE LOC (JAG)	12163705	1	628.00	HARNESS, TRANS WRG (AC-DELCO #12163705)
98	Y 6-SPD M/TRANS (MM6), CHASSIS, REALTIME DAMPING (F46), (EXC FRT ABS BRAKE LOC (JAG), EUROPEAN PROVISIONS (VD1) (EXPORT)	12163706	1	628.00	HARNESS, TRANS WRG (AC-DELCO #12163706)
98	Y 4-SPD A/TRANS (M30), FRT ABS BRAKE LOC (JAG), (EXC CHASSIS, REALTIME DAMPING (F46)	12163790	1	367.43	HARNESS, TRANS WRG
98	Y 6-SPD M/TRANS (MM6), FRT ABS BRAKE LOC (JAG), (EXC CHASSIS, REALTIME DAMPING (F46) EUROPEAN PROVISIONS (VD1) (EXPORT)	12163791	1	367.43	HARNESS, TRANS WRG
98	Y 4-SPD A/TRANS (M30), CHASSIS, REALTIME DAMPING (F46) FRT ABS BRAKE LOC (JAG)	12163792	1	367.43	HARNESS, TRANS WRG
98	Y 6-SPD M/TRANS (MM6) CHASSIS, REALTIME DAMPING (F46) FRT ABS BRAKE LOC (JAG) (EXC EUROPEAN PROVISIONS (VD1) (EXPORT)	12163793	1	367.43	HARNESS, TRANS WRG
99-00	Y 4-SPD A/TRANS (M30) (EXC CHASSIS, REALTIME DAMPING (F46)	12169026	1	240.00	HARNESS, TRANS WRG (AC-DELCO #12169026)

cardiagn.com

2.480 HARNESS – WIRE, Chassis Wiring(Con't)

99–00	Y 6–SPD M/TRANS (MM6), (EXC CHASSIS, REALTIME DAMPING (F45), EUROPEAN PROVISIONS (VD1) (EXPORT)	12189827	1	201.00	HARNESS, TRANS WRG (AC–DELCO #12189827)
99–00	Y 4–SPD A/TRANS (M30), CHASSIS, REALTIME DAMPING (F45)	12189828	1	375.00	HARNESS, TRANS WRG (AC–DELCO #12189828)
99–00	Y 6–SPD M/TRANS (MM6), CHASSIS, REALTIME DAMPING (F45), (EXC EUROPEAN PROVISIONS (VD1) (EXPORT)	12189829	1	311.00	HARNESS, TRANS WRG (AC–DELCO #12189829)
01–02	Y 4–SPD A/TRANS (M30), (EXC CHASSIS, REALTIME DAMPING (F45)	10448120	1	248.00	HARNESS, TRANS WRG
01–02	Y 6–SPD M/TRANS (MM6), (EXC CHASSIS, REALTIME DAMPING (F45), EUROPEAN PROVISIONS (VD1) (EXPORT)	10448121	1		HARNESS, TRANS WRG
01–02	Y 4–SPD A/TRANS (M30), CHASSIS, REALTIME DAMPING (F45)	10448122	1		HARNESS, TRANS WRG
01–02	Y 6–SPD M/TRANS (MM6), CHASSIS, REALTIME DAMPING (F45), (EXC EUROPEAN PROVISIONS (VD1) (EXPORT)	10448123	1	311.00	HARNESS, TRANS WRG
01–02	YY37	10448126	1		HARNESS, TRANS WRG
97	Y 5.7G (LS1)	16320540	1	29.84	WIRE, KNOCK SEN
98	Y 5 7G (LS1), (1ST DES)	16320540	1	29.84	WIRE, KNOCK SEN (USE W/KNOCK SENSOR STAMPED 10456222 & W/INDEX TAB ON CONNECTOR TO SENSOR) (FOR 2ND DES SEE 16320926)
98	Y 5 7G (LS1), (2ND DES)	16320926	1	29.84	WIRE, KNOCK SEN (USE W/KNOCK SENSOR STAMPED 10456603 & CONNECTOR W/O INDEX TAB) (FOR 1ST DES SEE 16320540)
00–01	Y 5 7G (LS1)	16372170	1	29.84	WIRE, KNOCK SEN
01	Y 5 7G (LS6)	16372170	1	29.84	WIRE KNOCK SEN
02	Y 5 7G (LS1)	16372170	1	29 84	WIRE KNOCK SEN
02	Y 5 7G (LS6)	16372170	1	29.84	WIRE, KNOCK SEN
	EXPORT	*EXPORT*	*EXPORT*	*EXPORT*	*EXPORT*
97	Y EUROPEAN PROVISIONS (VD1) (EXPORT)	12100803	1	944.44	HARNESS, FWD LP WRG
97	Y 861 & MKR LP (T00) (EXPORT), VE1 (EXPORT)	12100804	1	295.80	HARNESS, FWD LP WRG
00	Y07 67 SIG & MKR LP (T00) (EXPORT) (EXC ACTIVE BRAKE CTL (JL4)	12180078	1	301.02	HARNESS FWD LP WRG
00	Y07 67 ACTIVE BRAKE CTL (JL4), SIG & MKR LP (T00) (EXPORT)	12180078	1	300.00	HARNESS FWD LP WRG
00	Y07 67 SIG & MKR LP (T00) (EXPORT) (EXC ACTIVE BRAKE CTL (JL4)	16329400	1	301.02	HARNESS FWD LP WRG
00	Y07 67 ACTIVE BRAKE CTL (JL4) SIG & MKR LP (T00) (EXPORT)	16329400	1	300.00	HARNESS FWD LP WRG
02	YY07 67 SIG & MKR LP (T00) (EXPORT)	10310700	1	300 00	HARNESS FWD LP WRG
97	Y07 SIG & MKR LP (T00) (EXPORT)	16329463	1	40.00	HARNESS FWD LP WRG HARN EXTN
98 99	Y07 67 SIG & MKR LP (T00) (EXPORT)	16329463	1	40 00	HARNESS FWD LP WRG HARN EXTN

cardiagn.com

2.480 HARNESS – WIRE, Chassis Wiring(Con't)

00–02	Y07–67 SIG & MKR LP (T90) (EXPORT)	15329463	1	40.09	HARNESS, FWD LP WRG HARN EXTN
97	Y 4–SPD A/TRANS (M30), A/C FRT AUTO/AUX CONT (CJ2), TAIL & S/LP (T89) (EXPORT), (EXC SPECIAL TAIL & S/LP (T93), CANADIAN (Z49)	12189872	1	1257.59	HARNESS, I/P WRG
97	Y 6–SPD M/TRANS (MM6), A/C FRT AUTO/AUX CONT (CJ2), TAIL & S/LP (T89) (EXPORT), (EXC SPECIAL TAIL & S/LP (T93), CANADIAN (Z49)	12189873	1	1257.59	HARNESS, I/P WRG
97	Y 4–SPD A/TRANS (M30), A/C MAN CONT (C60), TAIL & S/LP (T89) (EXPORT), (EXC SPECIAL TAIL & S/LP (T93), CANADIAN (Z49)	12189878	1		HARNESS, I/P WRG
98	Y07 4–SPD A/TRANS (M30), A/C FRT AUTO/AUX CONT (CJ2), TAIL & S/LP (T89) (EXPORT), (EXC FRT ABS BRAKE LOC (JAG), SPECIAL TAIL & S/LP (T93), CANADIAN (Z49)	12189817	1	1257.59	HARNESS, I/P WRG
98	Y07 6–SPD M/TRANS (MM6), A/C FRT AUTO/AUX CONT (CJ2), TAIL & S/LP (T89) (EXPORT), (EXC FRT ABS BRAKE LOC (JAG), SPECIAL TAIL & S/LP (T93), CANADIAN (Z49)	12189818	1	1257.59	HARNESS, I/P WRG
98	Y07 4–SPD A/TRANS (M30), A/C MAN CONT (C60), TAIL & S/LP (T89) (EXPORT), (EXC FRT ABS BRAKE LOC (JAG), SPECIAL TAIL & S/LP (T93) CANADIAN (Z49)	12189823	1	1257.59	HARNESS, I/P WRG
98	Y07 6–SPD M/TRANS (MM6) A/C MAN CONT (C60), TAIL & S/LP (T89) (EXPORT), (EXC FRT ABS BRAKE LOC (JAG), SPECIAL TAIL & S/LP (T93) CANADIAN (Z49)	12189824	1	1257.59	HARNESS, I/P WRG
98	Y07 4–SPD A/TRANS (M30), A/C FRT AUTO/AUX CONT (CJ2), FRT ABS BRAKE LOC (JAG), ACTIVE BRAKE CTL (JL4), TAIL & S/LP (T89) (EXPORT)	12190404	1	1233.23	HARNESS I/P WRG (MUST BE USED W/BODY CONT MDL LABELED 9360821 FOR 1998)
98	Y07 6–SPD M/TRANS (MM6), A/C FRT AUTO/AUX CONT (CJ2), FRT ABS BRAKE LOC (JAG), ACTIVE BRAKE CTL (JL4) TAIL & S/LP (T89) (EXPORT)	12190405	1	1233.23	HARNESS, I/P WRG (MUST BE USED W/BODY CONT MDL LABELED 9360821 FOR 1998)
98	Y07 4–SPD A/TRANS (M30), A/C MAN CONT (C60) FRT ABS BRAKE LOC (JAG), ACTIVE BRAKE CTL (JL4) TAIL & S/LP (T89) (EXPORT)	12190410	1	1233.23	HARNESS I/P WRG (MUST BE USED W/BODY CONT MDL LABELED 9360821 FOR 1998)
98	Y07 6–SPD M/TRANS (MM6) A/C MAN CONT (C60) FRT ABS BRAKE LOC (JAG) ACTIVE BRAKE CTL (JL4) TAIL & S/LP (T89) (EXPORT)	12190411	1	1233.23	HARNESS I/P WRG (MUST BE USED W/BODY CONT MDL LABELED 9360821 FOR 1998)

cardiagn.com

2.480 HARNESS – WIRE, Chassis Wiring(Con't)

98	Y07 4-SPD A/TRANS (M30), A/C FRT AUTO/AUX CONT (CJ2), FRT ABS BRAKE LOC (JAG), TAIL & S/LP (T89) (EXPORT), (EXC ACTIVE BRAKE CTL (JL4), SPECIAL TAIL & S/LP (T93), CANADIAN (Z49)	12190416	1	1257.59	HARNESS, I/P WRG (MUST BE USED W/BODY CONT MDL LABELED 9359821 FOR 1998)
98	Y07 6-SPD M/TRANS (MM6), A/C FRT AUTO/AUX CONT (CJ2), FRT ABS BRAKE LOC (JAG), TAIL & S/LP (T89) (EXPORT), (EXC ACTIVE BRAKE CTL (JL4), SPECIAL TAIL & S/LP (T93), CANADIAN (Z49)	12190417	1	1257.59	HARNESS, I/P WRG (MUST BE USED W/BODY CONT MDL LABELED 9359821 FOR 1998)
98	Y07 4-SPD A/TRANS (M30), A/C MAN CONT (C60), FRT ABS BRAKE LOC (JAG), TAIL & S/LP (T89) (EXPORT), (EXC ACTIVE BRAKE CTL (JL4), SPECIAL TAIL & S/LP (T93), CANADIAN (Z49)	12190422	1	1257.59	HARNESS, I/P WRG (MUST BE USED W/BODY CONT MDL LABELED 9359821 FOR 1998)
98	Y07 6-SPD M/TRANS (MM6), A/C MAN CONT (C60), FRT ABS BRAKE LOC (JAG), TAIL & S/LP (T89) (EXPORT), (EXC ACTIVE BRAKE CTL (JL4), SPECIAL TAIL & S/LP (T93), CANADIAN (Z49)	12190423	1	1257.59	HARNESS, I/P WRG (MUST BE USED W/BODY CONT MDL LABELED 9359821 FOR 1998)
98	Y67 4-SPD A/TRANS (M30), A/C FRT AUTO/AUX CONT (CJ2), TAIL & S/LP (T89) (EXPORT), (EXC FRT ABS BRAKE LOC (JAG), SPECIAL TAIL & S/LP (T93), CANADIAN (Z49)	12189809	1	1257.59	HARNESS, I/P WRG
98	Y67 4-SPD A/TRANS (M30), A/C MAN CONT (C60), TAIL & S/LP (T89) (EXPORT), (EXC FRT ABS BRAKE LOC (JAG), SPECIAL TAIL & S/LP (T93), CANADIAN (Z49)	12189810	1	1257.59	HARNESS, I/P WRG
98	Y67 6-SPD M/TRANS (MM6), A/C FRT AUTO/AUX CONT (CJ2), TAIL & S/LP (T89) (EXPORT), (EXC FRT ABS BRAKE LOC (JAG), SPECIAL TAIL & S/LP (T93), CANADIAN (Z49)	12189811	1	1257.59	HARNESS, I/P WRG
98	Y67 6-SPD M/TRANS (MM6), A/C MAN CONT (C60), TAIL & S/LP (T89) (EXPORT), (EXC FRT ABS BRAKE LOC (JAG), SPECIAL TAIL & S/LP (T93), CANADIAN (Z49)	12189812	1	1257.59	HARNESS, I/P WRG
98	Y67 4-SPD A/TRANS (M30), A/C FRT AUTO/AUX CONT (CJ2), FRT ABS BRAKE LOC (JAG), TAIL & S/LP (T89) (EXPORT)	12189808	1	1233.23	HARNESS, I/P WRG (MUST BE USED W/BODY CONT MDL LABELED 9359821 FOR 1998)
98	Y67 4-SPD A/TRANS (M30), A/C MAN CONT (C60), FRT ABS BRAKE LOC (JAG), TAIL & S/LP (T89) (EXPORT)	12189809	1	1233.23	HARNESS, I/P WRG (MUST BE USED W/BODY CONT MDL LABELED 9359821 FOR 1998)
98	Y67 6-SPD M/TRANS (MM6), A/C FRT AUTO/AUX CONT (CJ2), FRT ABS BRAKE LOC (JAG), TAIL & S/LP (T89) (EXPORT)	12189810	1	1233.23	HARNESS, I/P WRG (MUST BE USED W/BODY CONT MDL LABELED 9359821 FOR 1998)

cardiagn.com

2.480 HARNESS – WIRE, Chassis Wiring(Con't)

98	Y67 6-SPD M/TRANS (MM6), A/C MAN CONT (C60), FRT ABS BRAKE LOC (JAG), TAIL & S/LP (T89) (EXPORT)	12189991	1	1233.23	HARNESS, I/P WRG (MUST BE USED W/BODY CONT MDL LABELED 9359821 FOR 1998)
99-00	Y07 4-SPD A/TRANS (M30), A/C FRT AUTO/AUX CONT (CJ2), ACTIVE BRAKE CTL (JL4), TAIL & S/LP (T89) (EXPORT)	12190426	1	1233.23	HARNESS, I/P WRG (MAY REQUIRE 12450028 I/P COMPT LP & 12102616 PWR RCPT CONN)
99-00	Y07 4-SPD A/TRANS (M30), A/C MAN CONT (C60), ACTIVE BRAKE CTL (JL4), TAIL & S/LP (T89) (EXPORT)	12190428	1	1233.23	HARNESS, I/P WRG (MAY REQUIRE 12450028 I/P COMPT LP & 12102616 PWR RCPT CONN)
99-00	Y07 6-SPD M/TRANS (MM6), A/C FRT AUTO/AUX CONT (CJ2), ACTIVE BRAKE CTL (JL4), TAIL & S/LP (T89) (EXPORT)	12190431	1	1233.23	HARNESS, I/P WRG (MAY REQUIRE 12450028 I/P COMPT LP & 12102616 PWR RCPT CONN)
99-00	Y07 6-SPD M/TRANS (MM6), A/C MAN CONT (C60), ACTIVE BRAKE CTL (JL4), TAIL & S/LP (T89) (EXPORT)	12190433	1	1233.23	HARNESS, I/P WRG (MAY REQUIRE 12450028 I/P COMPT LP & 12102616 PWR RCPT CONN)
99-00	Y07 4-SPD A/TRANS (M30), A/C FRT AUTO/AUX CONT (CJ2), TAIL & S/LP (T89) (EXPORT), (EXC ACTIVE BRAKE CTL (JL4)	12190436	1	1257.59	HARNESS, I/P WRG (MAY REQUIRE 12450028 I/P COMPT LP & 12102616 PWR RCPT CONN)
99-00	Y07 4-SPD A/TRANS (M30), A/C MAN CONT (C60), TAIL & S/LP (T89) (EXPORT), (EXC ACTIVE BRAKE CTL (JL4)	12190438	1	1257.59	HARNESS, I/P WRG (MAY REQUIRE 12450028 I/P COMPT LP & 12102616 PWR RCPT CONN)
99-00	Y07 6-SPD M/TRANS (MM6), A/C FRT AUTO/AUX CONT (CJ2), TAIL & S/LP (T89) (EXPORT), (EXC ACTIVE BRAKE CTL (JL4)	12190441	1	1257.59	HARNESS, I/P WRG (MAY REQUIRE 12450028 I/P COMPT LP & 12102616 PWR RCPT CONN)
99-00	Y07 6-SPD M/TRANS (MM6), A/C MAN CONT (C60), TAIL & S/LP (T89) (EXPORT), (EXC ACTIVE BRAKE CTL (JL4)	12190443	1	1257.59	HARNESS, I/P WRG (MAY REQUIRE 12450028 I/P COMPT LP & 12102616 PWR RCPT CONN)
99-00	Y67 4-SPD A/TRANS (M30), A/C FRT AUTO/AUX CONT (CJ2), TAIL & S/LP (T89) (EXPORT)	12190446	1	1233.23	HARNESS, I/P WRG (MAY REQUIRE 12450028 I/P COMPT LP & 12102616 PWR RCPT CONN)
99-00	Y67 4-SPD A/TRANS (M30), A/C MAN CONT (C60), TAIL & S/LP (T89) (EXPORT)	12190448	1	1233.23	HARNESS, I/P WRG (MAY REQUIRE 12450028 I/P COMPT LP & 12102616 PWR RCPT CONN)
99-00	Y67 6-SPD M/TRANS (MM6), A/C FRT AUTO/AUX CONT (CJ2), TAIL & S/LP (T89) (EXPORT)	12190451	1	1233.23	HARNESS, I/P WRG (MAY REQUIRE 12450028 I/P COMPT LP & 12102616 PWR RCPT CONN)
99-00	Y67 6-SPD M/TRANS (MM6), A/C MAN CONT (C60), TAIL & S/LP (T89) (EXPORT)	12190453	1	1233.23	HARNESS, I/P WRG (MAY REQUIRE 12450028 I/P COMPT LP & 12102616 PWR RCPT CONN)
00	Y07 4-SPD A/TRANS (M30), A/C FRT AUTO/AUX CONT (CJ2), ACTIVE BRAKE CTL (JL4), TAIL & S/LP (T89) (EXPORT)	10442561	1	1233.23	HARNESS, I/P WRG (INCLUDES PROVISIONS FOR MAN SUPPRESSION SYS, INCLUDES HARN, INLINE P/DOOR)
00	Y07 6-SPD M/TRANS (MM6), A/C FRT AUTO/AUX CONT (CJ2), ACTIVE BRAKE CTL (JL4), TAIL & S/LP (T89) (EXPORT)	10442565	1	1233.23	HARNESS, I/P WRG (INCLUDES PROVISIONS FOR MAN SUPPRESSION SYS, INCLUDES HARN, INLINE P/DOOR)
00	Y07 4-SPD A/TRANS (M30), A/C FRT AUTO/AUX CONT (CJ2), TAIL & S/LP (T89) (EXPORT), (EXC ACTIVE BRAKE CTL (JL4)	10442569	1	1257.59	HARNESS, I/P WRG (INCLUDES PROVISIONS FOR MAN SUPPRESSION SYS, INCLUDES HARN, INLINE P/DOOR)

cardiagn.com

2.480 HARNESS – WIRE, Chassis Wiring(Con't)

00	Y07 6–SPD M/TRANS (MM6), A/C FRT AUTO/AUX CONT (CJ2), TAIL & S/LP (T89) (EXPORT), (EXC ACTIVE BRAKE CTL (JL4)	10442573	1	1257.59	HARNESS, I/P WRG (INCLUDES PROVISIONS FOR MAN. SUPPRESSION SYS. INCLUDES HARN.INLINE P/DOOR) .....
00	Y07 4–SPD A/TRANS (M30), A/C MAN CONT (C60), ACTIVE BRAKE CTL (JL4), TAIL & S/LP (T89) (EXPORT)	15329429	1	1233.23	HARNESS, I/P WRG .....
00	Y07 6–SPD M/TRANS (MM6), A/C MAN CONT (C60), ACTIVE BRAKE CTL (JL4), TAIL & S/LP (T89) (EXPORT)	15329434	1	1233.23	HARNESS, I/P WRG .....
00	Y07 4–SPD A/TRANS (M30), A/C MAN CONT (C60), TAIL & S/LP (T89) (EXPORT), (EXC ACTIVE BRAKE CTL (JL4)	15329439	1	1257.59	HARNESS, I/P WRG .....
00	Y07 6–SPD M/TRANS (MM6), A/C MAN CONT (C60), TAIL & S/LP (T89) (EXPORT), (EXC ACTIVE BRAKE CTL (JL4)	15329444	1	1257.59	HARNESS, I/P WRG .....
00	Y67 4–SPD A/TRANS (M30), A/C FRT AUTO/AUX CONT (CJ2), TAIL & S/LP (T89) (EXPORT)	10442577	1	1233.23	HARNESS, I/P WRG (INCLUDES PROVISIONS FOR MAN. SUPPRESSION SYS. INCLUDES HARN.INLINE P/DOOR) .....
00	Y67 6–SPD M/TRANS (MM6), A/C FRT AUTO/AUX CONT (CJ2), TAIL & S/LP (T89) (EXPORT)	10442581	1	1233.23	HARNESS, I/P WRG (INCLUDES PROVISIONS FOR MAN. SUPPRESSION SYS. INCLUDES HARN INLINE P/DOOR) .....
00	Y67 4–SPD A/TRANS (M30), A/C MAN CONT (C60), TAIL & S/LP (T89) (EXPORT)	15329449	1	1233.23	HARNESS, I/P WRG .....
00	Y67 6–SPD M/TRANS (MM6), A/C MAN CONT (C60), TAIL & S/LP (T89) (EXPORT)	15329454	1	1233.23	HARNESS, I/P WRG .....
01	Y07 4–SPD A/TRANS (M30), A/C FRT AUTO/AUX CONT (CJ2) ACTIVE BRAKE CTL (JL4), TAIL & S/LP (T89) (EXPORT), (2ND DES)	10310783	1	1233.23	HARNESS, I/P WRG (2ND DSN USED ON/AFTER VIN #15107689, (1ST DSN 10448091)) .....
01	Y07 6–SPD M/TRANS (MM6), A/C FRT AUTO/AUX CONT (CJ2), ACTIVE BRAKE CTL (JL4), TAIL & S/LP (T89) (EXPORT), (2ND DES)	10310784	1	1233.23	HARNESS, I/P WRG (2ND DSN USED ON/AFTER VIN #15107689, (1ST DSN 10448092))
01	Y07 4–SPD A/TRANS (M30), A/C FRT AUTO/AUX CONT (CJ2), ACTIVE BRAKE CTL (JL4), TAIL & S/LP (T89) (EXPORT), (1ST DES)	10448091	1	1233.23	HARNESS, I/P WRG (1ST DSN USED B/4 VIN #15107689, (2ND DSN 10310783)) .....
01	Y07 6–SPD M/TRANS (MM6), A/C FRT AUTO/AUX CONT (CJ2), ACTIVE BRAKE CTL (JL4), TAIL & S/LP (T89) (EXPORT), (1ST DES)	10448092	1	1233.23	HARNESS, I/P WRG (1ST DSN USED B/4 VIN #15107689, (2ND DSN 10310784))
01	Y67 4–SPD A/TRANS (M30), A/C FRT AUTO/AUX CONT (CJ2), TAIL & S/LP (T89) (EXPORT), (2ND DES)	10310791	1	1233.23	HARNESS, I/P WRG (2ND DSN USED ON/AFTER VIN #15107689, (1ST DSN 10448107))
01	Y67 6–SPD M/TRANS (MM6), A/C FRT AUTO/AUX CONT (CJ2), TAIL & S/LP (T89) (EXPORT), (2ND DES)	10310792	1	1233.23	HARNESS, I/P WRG (2ND DSN USED ON/AFTER VIN #15107689, (1ST DSN 10448108))
01	Y67 4–SPD A/TRANS (M30), A/C FRT AUTO/AUX CONT (CJ2), TAIL & S/LP (T89) (EXPORT), (1ST DES)	10448107	1	1233.23	HARNESS, I/P WRG (1ST DSN USED B/4 VIN #15107689, (2ND DSN 10310791))

cardiagn.com

2.480 HARNESS – WIRE, Chassis Wiring(Con't)

01	Y67 6-SPD M/TRANS (MM6), A/C FRT AUTO/AUX CONT (CJ2), TAIL & S/LP (T89) (EXPORT), (1ST DES)	10448108	1	1233.23	HARNESS, I/P WRG (1ST DSN USED B/4 VIN #15107689, (2ND DSN 10310792))
02	YY67 4-SPD A/TRANS (M30), A/C FRT AUTO/AUX CONT (CJ2), TAIL & S/LP (T89) (EXPORT)	10310791	1	1233.23	HARNESS, I/P WRG
02	YY67 6-SPD M/TRANS (MM6), A/C FRT AUTO/AUX CONT (CJ2), TAIL & S/LP (T89) (EXPORT)	10310792	1	1233.23	HARNESS, I/P WRG
02	Y07 4-SPD A/TRANS (M30), A/C FRT AUTO/AUX CONT (CJ2), TAIL & S/LP (T89) (EXPORT)	10310783	1	1233.23	HARNESS, I/P WRG
02	Y07 6-SPD M/TRANS (MM6), A/C FRT AUTO/AUX CONT (CJ2), TAIL & S/LP (T89) (EXPORT)	10310784	1	1233.23	HARNESS, I/P WRG
98	Y 6-SPD M/TRANS (MM6), CHASSIS, REALTIME DAMPING (F45), EUROPEAN PROVISIONS (VD1) (EXPORT), (EXC FRT ABS BRAKE LOC (JAG)	12189908	1	628.00	HARNESS, TRANS WRG (AC-DELCO #12189908)
96	Y 6-SPD M/TRANS (MM6), EUROPEAN PROVISIONS (VD1) (EXPORT), (EXC CHASSIS, REALTIME DAMPING (F45), FRT ABS BRAKE LOC (JAG)	12189909	1	425.00	HARNESS, TRANS WRG (AC-DELCO #12189909)
98	Y 6-SPD M/TRANS (MM6), CHASSIS, REALTIME DAMPING (F45), FRT ABS BRAKE LOC (JAG), EUROPEAN PROVISIONS (VD1) (EXPORT)	12189912	1	543.43	HARNESS, TRANS WRG
98	Y 6-SPD M/TRANS (MM6), FRT ABS BRAKE LOC (JAG), EUROPEAN PROVISIONS (VD1) (EXPORT), (EXC CHASSIS, REALTIME DAMPING (F45)	12189913	1	367.44	HARNESS, TRANS WRG
99-00	Y 6-SPD M/TRANS (MM6), CHASSIS, REALTIME DAMPING (F45), EUROPEAN PROVISIONS (VD1) (EXPORT)	12189914	1	201.00	HARNESS, TRANS WRG (ENHANCE EVAP) (AC-DELCO #12189914)
99-00	Y 3-SPD M/TRANS (MM6), EUROPEAN PROVISIONS (VD1) (EXPORT), (EXC CHASSIS, REALTIME DAMPING (F45)	12189915	1	254.00	HARNESS, TRANS WRG (ENHANCE EVAP) (AC-DELCO #12189915)
01-02	Y 6-SPD M/TRANS (MM6), CHASSIS, REALTIME DAMPING (F45), EUROPEAN PROVISIONS (VD1) (EXPORT)	10448124	1		HARNESS, TRANS WRG (ENHANCE EVAP)
01-02	Y 6-SPD M/TRANS (MM6), EUROPEAN PROVISIONS (VD1) (EXPORT), (EXC CHASSIS REALTIME DAMPING (F45)	10448125	1		HARNESS, TRANS WRG (ENHANCE EVAP)

2.530 CONNECTOR – COVER – INSULATOR – PLUG – SEAL, Chassis Electrical

07-02	Y	15305201	1	1.48	CONNECTOR GND BUS BAR (12 WAY F GT 280, W/O UPR CONN/CVR W/O LEADS MATES W 15305202 CONN/CVR) (12 WAY F)
07-02	Y	15305202	1	2.75	CONNECTOR, GND BUS BAR (MATES WITH AND ACTS AS A CVR FOR 15305201)

cardiagn.com

2.530 CONNECTOR – COVER – INSULATOR – PLUG – SEAL, Chassis Electrical(Con't)

97–02	Y	15305294	2	1.48	CONNECTOR, GND–BUS BAR (12–WAY FEMALE BUS BAR. OFTEN USED W/15305300 UPR (COVER) .) (LOWER) (12–WAY FEMALE) (W/O LEADS)
97–02	Y	15305300	2	2.75	CONNECTOR, GND–BUS BAR (USED AS COVER FOR 12–WAY BUS BAR 15305294.) (THIS IS A MALE CAP/BAR WHICH MATES TO 12–WAY FEMALE)
98–02	YY67	12102561	1	11.89	CONNECTOR, GND–BUS BAR (1–WAY F, W/LEADS) (02.535) (AC–DELCO #PT230)
99–00	Y	12167308	2	22.17	CONNECTOR, GND–BUS BAR (80–WAY F) (USE TERM 12084912 18 GA & TERM 12084913 20 GA) (03.670)
01–02	YY07	12167133	1	12.95	CONNECTOR, GND–BUS BAR (1–WAY F) (W/LEADS) (M/P 630 SELF LK) (09.778) (AC–DELCO #PT798)
01–02	YY67 6–WAY PWR P/SEAT ADJR (AG2), SPEAKER SYSTEM 6 (UZ6)	15305294	1	1.48	CONNECTOR, GND–BUS BAR (LOWER) (12–WAY FEMALE) (W/O LEADS)
02	YY 4–SPD A/TRANS (M30), A/C FRT AUTO/AUX CONT (CJ2), T&T WHL (N37), (EXC TAIL & S/LP (T89) (EXPORT)	15305294	2	1.48	CONNECTOR, GND–BUS BAR (12–WAY FEMALE BUS BAR. OFTEN USED W/15305300 UPR (COVER)) (LOWER) (12–WAY FEMALE) (W/O LEADS)
97	Y CHASSIS, REALTIME DAMPING (F45)	12117025	4	22.50	CONNECTOR, INLINE–TO ELEK SUSP POSN SEN (BLACK) (3–WAY F) (W/LEADS) (02.383) (AC–DELCO #PT420)
98	Y CHASSIS, REALTIME DAMPING (F45), FRT ABS BRAKE LOC (JAG)	12117025	4	22.50	CONNECTOR, INLINE–TO ELEK SUSP POSN SEN (BLACK) (3–WAY F) (W/LEADS) (02.383) (AC–DELCO #PT420)
99–02	Y	12117025	4	22.50	CONNECTOR, INLINE–TO ELEK SUSP POSN SEN (BLACK) (3–WAY F) (W/LEADS) (02.383) (AC–DELCO #PT420)
97–02	Y 5.7G (LS1), 6–SPD M/TRANS (MM6), 4–SPD A/TRANS (M30)	12102490	1	44.37	CONNECTOR, INLINE–TO ENG HARN (7–WAY M, W/LEADS) (AC–DELCO #PT281)
97–98	Y	12125670	1	66.81	CONNECTOR, INLINE–TO ENG HARN (BLACK) (10–WAY F) (W/LEADS) (AC–DELCO #PT688)
97–02	Y 5.7G (LS1), 6–SPD M/TRANS (MM6), 4–SPD A/TRANS (M30)	12160280	1	2.50	CONNECTOR, INLINE–TO ENG HARN (20–WAY F) (W/O LEADS)
98–02	Y	12160542	1	2.50	CONNECTOR, INLINE–TO ENG HARN (20–WAY M, W/O LEADS)
98–00	Y 5.7G (LS1), 6–SPD M/TRANS (MM6), 4–SPD A/TRANS (M30)	12167120	1	24.44	CONNECTOR, INLINE–TO ENG HARN (BLACK) (2–WAY M) (W/LEADS) (04.720) (AC–DELCO #PT786)
01–02	Y 5.7S (LS6)	12102490	1	44.37	CONNECTOR, INLINE–TO ENG HARN (7–WAY M, W/LEADS) (AC–DELCO #PT281)
01–02	Y 5.7G (LS1), 4–SPD A/TRANS (M30), (MN5)	12167120	1	24.44	CONNECTOR, INLINE–TO ENG HARN (BLACK) (2–WAY M) (W/LEADS) (04.720) (AC–DELCO #PT786)

cardiagn.com

2.530 CONNECTOR – COVER – INSULATOR – PLUG – SEAL, Chassis Electrical(Con't)

01–02	Y 5.7S (LS6)	12167120	1	24.44	CONNECTOR, INLINE–TO ENG HARN (BLACK) (2–WAY M) (W/LEADS) (04.720) (AC–DELCO #PT786)
01–02	Y 5.7S (LS6), MANUAL 6 SPD O/D TRANS, TREMEC (M12)	12167120	1	24.44	CONNECTOR, INLINE–TO ENG HARN (BLACK) (2–WAY M) (W/LEADS) (04.720) (AC–DELCO #PT786)
02	Y 5.7S (LS6), MANUAL 6 SPD O/D TRANS, TREMEC (M12)	12102490	1	44.37	CONNECTOR, INLINE–TO ENG HARN (7–WAY M, W/LEADS) (AC–DELCO #PT281)
02	YY37	12160280	1	2.50	CONNECTOR, INLINE–TO ENG HARN (20–WAY F) (W/O LEADS)
97–02	Y 5.7G (LS1), 6–SPD M/TRANS (MM6), 4–SPD A/TRANS (M30)	12125676	1	66.81	CONNECTOR, INLINE–TO F/TNK HARN (BLACK) (10–WAY F) (W/LEADS) (AC–DELCO #PT588)
00–02	Y	12117025	RH	22.50	CONNECTOR, INLINE–TO F/TNK HARN (BLACK) (3–WAY F) (W/LEADS) (02.383) (AC–DELCO #PT420)
02	YY37	12101899	1	18.52	CONNECTOR, INLINE–TO F/TNK HARN (BLACK) (2–WAY F W/LEADS) (02.383) (AC–DELCO #PT169)
97–98	Y	12102747	1	21.73	CONNECTOR, INLINE–TO FWD LP HARN (BLACK) (2–WAY F W/LEADS) (03.670) (AC–DELCO #PT374)
97–02	Y (EXC SIG & MKR LP (T90) (EXPORT)	12117271	1	59.43	CONNECTOR, INLINE–TO FWD LP HARN (WHITE) (8–WAY F W/LEADS) (02.535) (AC–DELCO #PT444)
98–02	Y	12125676	1	66.81	CONNECTOR, INLINE–TO FWD LP HARN (BLACK) (10–WAY F) (W/LEADS) (AC–DELCO #PT588)
93–00	Y	12160280	1	2.50	CONNECTOR, INLINE–TO FWD LP HARN (20–WAY F) (W/O LEADS)
99–00	Y07–67	12102747	1	21.73	CONNECTOR, INLINE–TO FWD LP HARN (BLACK) (2–WAY F W/LEADS) (03.670) (AC–DELCO #PT374)
99–00	Y37 LP GRP (TR9)	12102747	1	21.73	CONNECTOR, INLINE–TO FWD LP HARN (BLACK) (2–WAY F W/LEADS) (03.670) (AC–DELCO #PT374)
00	Y	12085669	1	23.52	CONNECTOR, INLINE–TO FWD LP HARN (1–WAY M) (W/LEAD) (BLACK) (AC–DELCO #PT1223)
01–02	Y	12101899	1	18.52	CONNECTOR, INLINE–TO FWD LP HARN (BLACK) (2–WAY F W/LEADS) (02.383) (AC–DELCO #PT169)
01–02	Y	12102747	1	21.73	CONNECTOR, INLINE–TO FWD LP HARN (BLACK) (2–WAY F W/LEADS) (03.670) (AC–DELCO #PT374)
01–02	Y	15326842	1		CONNECTOR, INLINE–TO FWD LP HARN (10–WAY F) (13.100)
01–02	Y	15326847	1		CONNECTOR, INLINE–TO FWD LP HARN (10–WAY M) (02.483)
01–02	YY67	15306410	1	118.35	CONNECTOR, INLINE–TO FWD LP HARN (16–WAY FEMALE GT 150.) (16 WAY FEMALE) (AC–DELCO #PT1463)
01–02	YY67 4 SPD A/TRANS (M30), A/C FRT AUTO/AUX CONT (CJ2), T&T WHL (N37), (EXC TAIL & S LP (T89) (EXPORT)	15326286	1	3.33	CONNECTOR, INLINE–TO FWD LP HARN

cardiagn.com

2.530 CONNECTOR – COVER – INSULATOR – PLUG – SEAL, Chassis Electrical(Con't)

02	Y 6-SPD M/TRANS (MM6), 4-SPD A/TRANS (M30)	12101899	1	18.52	CONNECTOR, INLINE-TO FWD LP HARN (BLACK) (2-WAY F W/LEADS) (02.383) (AC-DELCO #PT169)
02	YY37	12101899	1	18.52	CONNECTOR, INLINE-TO FWD LP HARN (BLACK) (2-WAY F W/LEADS) (02.383) (AC-DELCO #PT169)
01-02	Y	12102741	4	26.79	CONNECTOR, INLINE-TO HTD OXY SEN (4-WAY F) (W/LEADS, IN A ROW) (04.651) (AC-DELCO #PT368)
97-02	Y	12101762	1	70.38	CONNECTOR, INLINE-TO I/P HARN (10-WAY F W/LEADS) (02.535) (AC-DELCO #PT150)
97-02	Y	12101832	1	46.41	CONNECTOR, INLINE-TO I/P HARN (BLUE) (10-WAY F) (W/LEADS) (AC PT224) (02.535) (AC-DELCO #PT224)
97-02	Y SPEAKER SYSTEM 6 (UZ6), MULTIPLE CD PLYR (U1S)	12102900	1	36.21	CONNECTOR, INLINE-TO I/P HARN (4-WAY F W/LEADS) (02.535) (AC-DELCO #PT382)
97-98	Y	12117270	1	56.37	CONNECTOR, INLINE-TO I/P HARN (8-WAY M W/LEADS) (AC-DELCO #PT443)
97	Y	12117371	1	25.70	CONNECTOR, INLINE-TO I/P HARN (3-WAY M W/LEADS) (AC-DELCO #PT504)
97-02	Y 6-SPD M/TRANS (MM6), 4-SPD A/TRANS (M30)	12117372	1	72.69	CONNECTOR, INLINE-TO I/P HARN (BLACK) (10-WAY M) (AC-DELCO #PT505)
97-00	Y	12160542	1	2.50	CONNECTOR, INLINE-TO I/P HARN (20-WAY M, W/O LEADS)
97-02	Y	15305888	2	30.36	CONNECTOR, INLINE-TO I/P HARN (6-WAY F W/LEADS) (13.090) (AC-DELCO #PT1032)
99	Y	12101822	1	33.42	CONNECTOR, INLINE-TO I/P HARN (GRAY) (8-WAY F) (W/LEADS) (02.535) (AC-DELCO #PT214)
01-02	Y	15326847	1		CONNECTOR, INLINE-TO I/P HARN (10-WAY M) (02.483)
01-02	YY	15306364	1	132.94	CONNECTOR, INLINE-TO I/P HARN (16-WAY MALE GT150 (W/ LEADS)) (AC-DELCO #PT1416)
02	Y O/S ELEC R/CON MIR (DD0), ELEC R/CON HTD MIR (DL8)	12101832	1	46.41	CONNECTOR, INLINE-TO I/P HARN (BLUE) (10-WAY F) (W/LEADS) (AC PT224) (02.535) (AC-DELCO #PT224)
02	Y O/S ELEC R/CON MIR (DD0), ELEC R/CON HTD MIR (DL8)	15305888	2	30.36	CONNECTOR, INLINE-TO I/P HARN (6-WAY F W/LEADS) (13.090) (AC-DELCO #PT1032)
02	YY37	12117372	1	72.69	CONNECTOR, INLINE-TO I/P HARN (BLACK) (10-WAY M) (AC DELCO #PT505)
97-00	Y 5.7G (LS1)	12102747	1	21.73	CONNECTOR, INLINE-TO KNOCK SEN (BLACK) (2-WAY F W/LEADS) (03.670) (AC-DELCO #PT374)
01-02	Y	12085495	1	27.30	CONNECTOR, INLINE-TO KNOCK SEN (BLACK) (3-WAY F) (W/LEADS) (02.535) (AC-DELCO #PT117)

cardiagn.com

2.530 CONNECTOR – COVER – INSULATOR – PLUG – SEAL, Chassis Electrical(Con't)

97–02	Y	12102747	1	21.73	CONNECTOR, INLINE–TO P/S ASST MOT (BLACK) (2–WAY F W/LEADS) (03.670) (AC–DELCO #PT374)
97–02	Y	12085536	1	29.85	CONNECTOR, INLINE–TO STRG COL HARN (BLACK) (4–WAY M) (W/LEADS) (02.535) (AC–DELCO #PT144)
97–02	Y	12092248	1	1.73	CONNECTOR, INLINE–TO STRG COL HARN (23–WAY M) (W/O LEADS)
97–02	Y	12125678	1	35.19	CONNECTOR, INLINE–TO STRG COL HARN (6–WAY F, W/LEADS) (09.172) (AC–DELCO #PT590)
98–02	Y	12085206	1	16.38	CONNECTOR, INLINE–TO STRG COL HARN (BLACK) (4–WAY M) (02.535)
98–02	Y	15305872	1	33.15	CONNECTOR, INLINE–TO STRG COL HARN (RR) (BLACK) (6–WAY M W/LEADS) (13.100) (AC–DELCO #PT1013)
99–02	Y	12085535	1	18.01	CONNECTOR, INLINE–TO STRG COL HARN (TO TELESCOPING MOTOR) (2–WAY F W/LEADS W/INDEX TAB OTR EDGE OF CAVITY B) (02.535) (AC–DELCO #PT146)
99–02	Y07–67	12101864	1	18.16	CONNECTOR, INLINE–TO STRG COL HARN (BLACK) (3–WAY F W/LEADS) (02.535) (AC–DELCO #PT256)
99–02	Y07–67	12117322	1	22.64	CONNECTOR, INLINE–TO STRG COL HARN (3–WAY M) (09.709) (AC–DELCO #PT455)
02	YY67 4–SPD A/TRANS (M30), A/C FRT AUTO/AUX CONT (CJ2), T&T WHL (N37), (EXC TAIL & S/LP (T89) (EXPORT)	12085535	1	18.01	CONNECTOR, INLINE–TO STRG COL HARN (TO TELESCOPING MOTOR) (2–WAY F W/LEADS W/INDEX TAB OTR EDGE OF CAVITY B) (02.535) (AC–DELCO #PT146)
02	YY67 4–SPD A/TRANS (M30), A/C FRT AUTO/AUX CONT (CJ2), T&T WHL (N37), (EXC TAIL & S/LP (T89) (EXPORT)	12085536	1	29.85	CONNECTOR, INLINE–TO STRG COL HARN (BLACK) (4–WAY M) (W/LEADS) (02.535) (AC–DELCO #PT144)
02	YY67 4–SPD A/TRANS (M30), A/C FRT AUTO/AUX CONT (CJ2), T&T WHL (N37), (EXC TAIL & S/LP (T89) (EXPORT)	12092248	1	1.73	CONNECTOR, INLINE–TO STRG COL HARN (23–WAY M) (W/O LEADS)
02	YY67 4–SPD A/TRANS (M30), A/C FRT AUTO/AUX CONT (CJ2), T&T WHL (N37), (EXC TAIL & S/LP (T89) (EXPORT)	12101864	1	18.16	CONNECTOR, INLINE–TO STRG COL HARN (BLACK) (3–WAY F W/LEADS) (02.535) (AC–DELCO #PT256)
02	YY67 4–SPD A/TRANS (M30), A/C FRT AUTO/AUX CONT (CJ2), T&T WHL (N37), (EXC TAIL & S/LP (T89) (EXPORT)	12117322	1	22.64	CONNECTOR, INLINE–TO STRG COL HARN (3–WAY M) (09.709) (AC–DELCO #PT455)
02	YY67	12125678	1	35.19	CONNECTOR, INLINE–TO STRG COL HARN (6–WAY F, W/LEADS) (09.172) (AC–DELCO #PT590)
02	YY67 4–SPD A/TRANS (M30), A/C FRT AUTO/AUX CONT (CJ2), T&T WHL (N37), (EXC TAIL & S/LP (T89) (EXPORT)	15305872	1	33.15	CONNECTOR, INLINE–TO STRG COL HARN (RR) (BLACK) (6–WAY M W/LEADS) (13.100) (AC–DELCO #PT1013)
97–02	Y	12117270	1	56.37	CONNECTOR, INLINE–TO TRANS (8–WAY M W/LEADS) (AC–DELCO #PT443)

cardiagn.com

2.530 CONNECTOR – COVER – INSULATOR – PLUG – SEAL, Chassis Electrical(Con't)

97–99	Y	12160493	1	15.30	CONNECTOR, INLINE–TO TRANS (14–WAY F) (W/O LEADS) (M/P 100W) (04.115) (CAN ALSO REPL 13–WAY CONN)
97–02	Y 6–SPD M/TRANS (MM6), 4–SPD A/TRANS (M30)	12160542	1	2.50	CONNECTOR, INLINE–TO TRANS (20–WAY M, W/O LEADS)
97	Y 4–SPD A/TRANS (M30)	12160782	1	5.61	CONNECTOR, INLINE–TO TRANS (20–WAY M)
97–01	Y	15305857	1	78.54	CONNECTOR, INLINE–TO TRANS (14–WAY F) (W/LEADS) (ACTUALLY 20–WAY W/6 CAVITIES MOLDED) (AC–DELCO #PT1008)
98–99	Y	12085485	1	18.67	CONNECTOR, INLINE–TO TRANS (BLACK) (2–WAY M) (W/LEADS) (02.535) (AC–DELCO #PT107)
98	Y67	12160280	2	2.50	CONNECTOR, INLINE–TO TRANS (20–WAY F) (W/O LEADS)
99–02	Y	12117372	1	72.69	CONNECTOR, INLINE–TO TRANS (BLACK) (10–WAY M) (AC–DELCO #PT505)
99–00	Y	12125676	1	66.81	CONNECTOR, INLINE–TO TRANS (BLACK) (10–WAY F) (W/LEADS) (AC–DELCO #PT588)
97–00	Y	12117372	1	72.69	CONNECTOR, INLINE–TO TRANS HARN (BLACK) (10–WAY M) (AC–DELCO #PT505)
97–00	Y	12125675	1	69.87	CONNECTOR, INLINE–TO TRANS HARN (GRAY) (10–WAY F) (W/LEADS) (AC–DELCO #PT587)
97–98	Y	12160280	1	2.50	CONNECTOR, INLINE–TO TRANS HARN (20–WAY F) (W/O LEADS)
97–98	Y	12162343	2	.58	CONNECTOR, INLINE–TO TRANS HARN (2–WAY M W/O LEADS) (04.720)
98	Y	12125676	1	66.81	CONNECTOR, INLINE–TO TRANS HARN (BLACK) (10–WAY F) (W/LEADS) (AC–DELCO #PT588)
98	Y	12160542	1	2.50	CONNECTOR, INLINE–TO TRANS HARN (20–WAY M, W/O LEADS)
99–02	Y	12162343	1	.58	CONNECTOR, INLINE–TO TRANS HARN (2–WAY M W/O LEADS) (04.720)
01–02	YY	15326842	1		CONNECTOR, INLINE–TO TRANS HARN (10–WAY F) (13.100)
01–02	YY07–67	15326847	1		CONNECTOR, INLINE–TO TRANS HARN (10–WAY M) (02.483)
97–99	Y	12177205	1	5.71	CONNECTOR, PWR DISTR BLK (68–WAY F, M/P 280 FLXLK, W/O LEADS, GRAY)
97–98	Y	12177206	1	5.71	CONNECTOR, PWR DISTR BLK (RR) (BLACK) (68–WAY F, M/P 280 FLXLK, W/O LEADS)
97–98	Y	12177207	1	5.71	CONNECTOR, PWR DISTR BLK (GRAY) (68–WAY F, M/P 280 FLXLK W/O LEADS)
97–02	Y	15303512	1	5.53	CONNECTOR, PWR DISTR BLK (GRAY) (68–WAY F W/O LEADS)
97–99	Y	15303513	1	5.53	CONNECTOR, PWR DISTR BLK (FRT) (BLACK) (68–WAY F M/P 280 FLXLK W/O LEADS)

cardiagn.com

2.530 CONNECTOR – COVER – INSULATOR – PLUG – SEAL, Chassis Electrical(Con't)

97–98	Y	15303514	1	5.53	CONNECTOR, PWR DISTR BLK (BROWN) (68–WAY F, M/P 280 FLYLK, W/O LEADS)
97–98	Y	15305886	1	20.91	CONNECTOR, PWR DISTR BLK (GRAY) (2–WAY F MAXI FUSE CONN W/LEADS) (AC–DELCO #PT1028)
97–99	Y	15305920	1	33.42	CONNECTOR, PWR DISTR BLK (GREEN) (2–WAY F W/LEADS) (AC–DELCO #PT1169)
98	Y	15305928	1	33.42	CONNECTOR, PWR DISTR BLK (BLACK) (2–WAY F, MAXI FUSE, W/LEADS) (AC–DELCO #PT1187)
98–99	Y	15305951	1	20.91	CONNECTOR, PWR DISTR BLK (2–WAY F MAXI FUSE W/LEADS) (AC–DELCO #PT1190)
01–02	Y	12177205	1	5.71	CONNECTOR, PWR DISTR BLK (68–WAY F, M/P 280 FLXLK, W/O LEADS, GRAY)
01–02	Y	15303513	1	5.53	CONNECTOR, PWR DISTR BLK (FRT) (BLACK) (68–WAY F M/P 280 FLXLK W/O LEADS)
01–02	YY	15328719	1	5.53	CONNECTOR, PWR DISTR BLK (68–WAY FEMALE M/P 280 FLXLK T3 (W/O LEADS) .) (GRAY) (68–WAY FEMALE M/P 280 FLXLK T3 W/O LEADS) (13.100)
01–02	YY67	12177206	1	5.71	CONNECTOR, PWR DISTR BLK (68–WAY FEMALE M/P 280 FLXLK (W/O LEADS) (BLACK) .) (BLACK) (68–WAY F, M/P 280 FLXLK, W/O LEADS)
01–02	YY67	12177207	1	5.71	CONNECTOR, PWR DISTR BLK (68–WAY FEMALE M/P 280 FLXLK (W/O LEADS) (GRAY) .) (GRAY) (68–WAY F, M/P 280 FLXLK, W/O LEADS)
01–02	YY67	15305886	1	20.91	CONNECTOR, PWR DISTR BLK (2–WAY FEMALE MAX 1 FUSE CONN (W/LEADS) GRAY.) (GRAY) (2–WAY F MAXI FUSE CONN W/LEADS) (AC–DELCO #PT1028)
01–02	YY67	15305920	1	33.42	CONNECTOR, PWR DISTR BLK (2–WAY FEMALE MAX 1 FUSE CONN (W/LEADS) .) (GREEN) (2–WAY F W/LEADS) (AC–DELCO #PT1169)
01–02	YY67	15305951	1	20.91	CONNECTOR, PWR DISTR BLK (2–WAY FEMALE MAX1–FUSE CONNECTOR (W/LEADS)) (2–WAY F MAXI FUSE W/LEADS) (AC–DELCO #PT1190)
97	Y 4–SPD A/TRANS (M30)	12162201	1	.58	CONNECTOR, SOL–A SHFT VLV (NATURAL) (2–WAY F) (W/O LEADS)
99–02	Y	12107857	1	13.28	CONNECTOR, SOL–A SHFT VLV (WHITE) (2–WAY F, W/LEADS) (02.535) (AC–DELCO #PT249)
97–02	Y	15305291	1	1.48	CONNECTOR, WRG HARN (12 WAY F GT–280, W/O UPR CONN/CVR, W/O LEADS, MATES W/15305292 CONN/CVR) (12–WAY F)

cardiagn.com

2.530 CONNECTOR – COVER – INSULATOR – PLUG – SEAL, Chassis Electrical(Con't)

97–02	YY67	15305914	1	60.96	CONNECTOR, WRG HARN (12–WAY FEMALE GT 150 (W/LEADS) .) (12–WAY F) (W/LEADS AND CAP) (02.440) (AC–DELCO #PT1101)
01–02	Y	15305292	1	2.75	CONNECTOR, WRG HARN
02	YY67 4–SPD A/TRANS (M30), A/C FRT AUTO/AUX CONT (CJ2), T&T WHL (N37), (EXC TAIL & S/LP (T89) (EXPORT)	15305292	1	2.75	CONNECTOR, WRG HARN (ACTS AS A COVER FOR MATING PART 15305291.)
02	YY67 4–SPD A/TRANS (M30), A/C FRT AUTO/AUX CONT (CJ2), T&T WHL (N37), (EXC TAIL & S/LP (T89) (EXPORT)	15305914	1	60.96	CONNECTOR, WRG HARN (12–WAY FEMALE GT 150 (W/LEADS) .) (12–WAY F) (W/LEADS AND CAP) (02.440) (AC–DELCO #PT1101)
	*EXPORT**********EXPORT**********EXPORT**********EXPORT**********EXPORT*				
02	YY07–67 SIG & MKR LP (T90) (EXPORT)	12117271	1	59.43	CONNECTOR, INLINE–TO FWD LP HARN (WHITE) (8–WAY F W/LEADS) (02.535) (AC–DELCO #PT444)
99	Y 6–SPD M/TRANS (MM6), EUROPEAN PROVISIONS (VD1) (EXPORT)	12160542	1	2.50	CONNECTOR, INLINE–TO TRANS HARN (20–WAY M, W/O LEADS)
99	Y 6–SPD M/TRANS (MM6), CHASSIS, REALTIME DAMPING (F45), EUROPEAN PROVISIONS (VD1) (EXPORT)	15305928	1	33.42	CONNECTOR, PWR DISTR BLK (BLACK) (2–WAY F, MAXI FUSE, W/LEADS) (AC–DELCO #PT1187)

2.698 CONNECTOR – RELAY – SWITCH, Back Up Lamp

97–02	Y 5.7G (LS1), 6–SPD M/TRANS (MM6)	14069600	1	14.52	SWITCH, B/U LP (M16X1.5 THD)
01–02	YY37 MANUAL 6 SPD O/D TRANS, TREMEC (M12)	14069600	1	14.52	SWITCH, B/U LP (M16X1.5 THD)
02	YY37 5.7S (LS6), MANUAL 6 SPD O/D TRANS, TREMEC (M12)	14069600	1	14.52	SWITCH, B/U LP (M16X1.5 THD)
97–02	Y 4–SPD A/TRANS (M30)	12450016	1	47.60	SWITCH, PARK/NEU POSN & B/U LP (04.054) (AC–DELCO #D2285A)

4.083 ADAPTER – BOLT – BRACKET – PLATE, Transmission Mounting Support [6–SPEED MANUAL]

97–02	Y 6–SPD M/TRANS (MM6)	12458098	1	48.00	ADAPTER, TRANS
01–02	YY MANUAL 6 SPD O/D TRANS, TREMEC (M12)	12458098	1	48.00	ADAPTER, TRANS
97–02	Y 6–SPD M/TRANS (MM6)	12458099	2	3.33	BOLT, TRANS ADAP (M6X13)
97–02	Y 6–SPD M/TRANS (MM6)	12523235	11	4.65	BOLT, TRANS ADAP (M10X1.5–40MM) (00.683)
01–02	YY MANUAL 6 SPD O/D TRANS, TREMEC (M12)	12458099	2	3.33	BOLT, TRANS ADAP (M6X13)
01–02	YY37 MANUAL 6 SPD O/D TRANS, TREMEC (M12)	12523235	11	4.65	BOLT, TRANS ADAP (M10X1.5–40MM) (00.683)
97–02	Y 6–SPD M/TRANS (MM6)	10283879	1	24.00	BRACKET, TRANS MT
01–02	Y MANUAL 6 SPD O/D TRANS, TREMEC (M12)	10283879	1	24.00	BRACKET, TRANS MT

4.085 NUT – STUD, Transmission Mount and Support [6–SPEED MANUAL]

97–02	Y 6–SPD M/TRANS (MM6)	10250686	2	3.33	NUT, TRANS MT (BOTTOM) (M10X1.5) (PREV TORQUE LRG FLANGED) (07.242)
01–02	Y MANUAL 6 SPD O/D TRANS, TREMEC (M12)	10250686	2	3.33	NUT, TRANS MT (BOTTOM) (M10X1.5) (PREV TORQUE LRG FLANGED) (07.242)

cardiagn.com

4.085 NUT – STUD, Transmission Mount and Support [6–SPEED MANUAL](Con't)

97–02	Y 6–SPD M/TRANS (MM6)	12458100	1	3.33	STUD, TRANS (M10X8)
97–02	Y 6–SPD M/TRANS (MM6)	88984492	1		STUD, TRANS (10X33)
97–02	Y 4–SPD A/TRANS (M30)	88984492	1		STUD, TRANS (10X33)
01–02	YY MANUAL 6 SPD O/D TRANS, TREMEC (M12)	12458100	1	3.33	STUD, TRANS (M10X8)
01–02	YY MANUAL 6 SPD O/D TRANS, TREMEC (M12)	88984492	1		STUD, TRANS (10X33)
97–00	Y 6–SPD M/TRANS (MM6)	12553527	1	4.55	STUD, TRANSAXLE (1 O'CLOCK POSN, RR VIEW)
01–02	Y 6–SPD M/TRANS (MM6), MANUAL 6 SPD O/D TRANS, TREMEC (M12)	12553527	1	4.55	STUD, TRANSAXLE (1 O'CLOCK POSN, RR VIEW)

4.105 COVER – MAGNET – PLATE, Transmission Case [6–SPEED MANUAL]

97–98	Y 5.7G (LS1)	12562042	RH	4.55	COVER, TRANS (AC–DELCO #12562042)

4.399 SEAL, Transmission Mainshaft [6–SPEED MANUAL]

97–02	Y 6–SPD M/TRANS (MM6)	12455044	1	21.30	SEAL, MAIN SHF INR
01	YY37 MANUAL 6 SPD O/D TRANS, TREMEC (M12)	12455044	1	21.30	SEAL, MAIN SHF INR
97–02	Y 6–SPD M/TRANS (MM6)	12455045	1	8.85	SEAL, MAIN SHF OTR
01	YY37 MANUAL 6 SPD O/D TRANS, TREMEC (M12)	12455045	1	8.85	SEAL, MAIN SHF OTR
97–02	Y 6–SPD M/TRANS (MM6)	12369456	1	7.95	SEAL, MAIN SHF SEAL RET (O RING) (05.508)

4.412 RING – SEAL – SPACER, Transmission Mainshaft [6–SPEED MANUAL]

97–02	Y 6–SPD M/TRANS (MM6)	24207010	1	8.50	SEAL, RR OUTPUT SHF (04.176) (AC–DELCO #24207010)

6.311 BEARING, Front Wheel Inner

97–02	Y	07470569	2	668.00	BEARING, FRT WHL (W/INTEGRAL SENSOR) (AC–DELCO #20–569)
00	Y	00457232	2	37.00	BEARING, FRT WHL (ID:LM501349–LM501310) (INCLS CUP&CONE) (1 5/8 ID X 2 57/64 OD X 25/32 THK) (TIMKEN) (05.536) (AC–DELCO #S21)

6.509 BOLT – CLAMP – INSULATOR – NUT – SLEEVE – WASHER, Steering Gear Mounting

97	Y	11515016	2	3.33	BOLT, S/GR (TORQ MATING PART) (M12X1.75X80) (08.900)
98	Y FRT ABS BRAKE LOC (JAG)	10422130	1	3.33	BOLT, S/GR
99–02	Y	10422130	2	3.33	BOLT, S/GR
97	Y	10406711	1	3.33	WASHER, S/GR
98	Y FRT ABS BRAKE LOC (JAG)	10406711	1	3.33	WASHER, S/GR
99–02	Y	10406711	1	3.33	WASHER, S/GR

6.760 BRACKET – SHIM, Steering Column Attaching

97–02	Y	10402879	1	155.02	BRACKET, STRG COL (#52)

7.014 BOLT – CROSSMEMBER – NUT, Rear Frame Cross

97	Y	10266823	1	649.00	CROSSMEMBER, RR (CAST ALUM)
98	Y (EXC FRT ABS BRAKE LOC (JAG)	10266823	1	649.00	CROSSMEMBER, RR (CAST ALUM)

cardiagn.com

98	Y FRT ABS BRAKE LOC (JAG)	10266824	1	649.00	CROSSMEMBER, RR
99–02	Y	10266824	1	649.00	CROSSMEMBER, RR

7.450 BRACKET – BULB – CONNECTOR – COVER – KNOB – MODULE – RELAY – RETAINER – SWITCH, Electronic Control Suspension

97–02	Y CHASSIS, REALTIME DAMPING (F45)	10280844	1	6.65	BRACKET, ELEK SUSP CONT MDL
01–02	Y	12160778	1	1.02	CONNECTOR, INLINE–TO ELEK SUSP MDL (BROWN) (24–WAY F) (W/O LEADS) (MIC/PAC 100) (03.670)
01–02	Y	12160779	1	2.23	CONNECTOR, INLINE–TO ELEK SUSP MDL (BROWN) (32–WAY F, W/O LEADS, MIC/PAC 100) (03.670)
97–02	Y	12102747	1	21.73	CONNECTOR, INLINE–TO S/ABS CONT ACTR (BLACK) (2–WAY F W/LEADS) (03.670) (AC–DELCO #PT374)
97	Y	12110207	1	2.28	CONNECTOR, MDL–ELEK SUSP CONT (BLUE) (32–WAY F W/O LEADSS) (03.670)
97–02	Y	12160778	1	1.02	CONNECTOR, MDL–ELEK SUSP CONT (BROWN) (24–WAY F) (W/O LEADS) (MIC/PAC 100) (03.670)
97–00	Y	12160779	1	2.23	CONNECTOR, MDL–ELEK SUSP CONT (BROWN) (32–WAY F, W/O LEADS, MIC/PAC 100) (03.670)
01–02	Y	12126463	1	45.66	CONNECTOR, SW--ELEK SUSP (BLACK) (2–WAY F) (W/LEADS) (02.530) (AC–DELCO #PT733)
97	Y07 CHASSIS, REALTIME DAMPING (F45)	10286260	LH	9.60	COVER, ELEK SUSP CONT MDL FIN
98–00	Y07–67 CHASSIS, REALTIME DAMPING (F45)	10286260	LH	9.60	COVER, ELEK SUSP CONT MDL FIN
01–02	Y07 CHASSIS, REALTIME DAMPING (F45)	10286260	LH	9.60	COVER, ELEK SUSP CONT MDL FIN
01–02	Y67 CHASSIS, REALTIME DAMPING (F45), (19I)	10440580	1	9.45	COVER, ELEK SUSP CONT MDL FIN (BLACK)
01–02	Y67 CHASSIS, REALTIME DAMPING (F45), (92I)	10440581	1	9.45	COVER, ELEK SUSP CONT MDL FIN (PEWTER)
01–02	Y67 CHASSIS, REALTIME DAMPING (F45), (87I)	10440582	1	9.45	COVER, ELEK SUSP CONT MDL FIN (OAK)
01–02	Y67 CHASSIS, REALTIME DAMPING (F45), (70I)	10440583	1	9.45	COVER, ELEK SUSP CONT MDL FIN (RED)
97–99	Y CHASSIS, REALTIME DAMPING (F45), (EXC EUROPEAN PROVISIONS (VD1) (EXPORT)	09360581	1	934.00	MODULE, ELEK SUSP CONT (RTD MODULE/FAST SHOCK) (AC–DELCO #9360581)
00–02	YY07–67 CHASSIS, REALTIME DAMPING (F45)	09366711	1	695.00	MODULE, ELEK SUSP CONT
97–98	Y	12088567	1	16.45	RELAY, ROAD SENSING SUSP DPNR (GRAY) (4–WAY) (09.277) (AC–DELCO #15–8571)
97–02	Y07 CHASSIS, REALTIME DAMPING (F45)	10267772	1	3.45	RETAINER, ELEC SUSP CONT MDL FIN CVR (14.640)
98–01	Y67 CHASSIS, REALTIME DAMPING (F45)	10267772	1	3.45	RETAINER, ELEC SUSP CONT MDL FIN CVR (14.640)
02	Y67 CHASSIS, REALTIME DAMPING (F45)	10267772	1	3.45	RETAINER, ELEC SUSP CONT MDL FIN CVR (14.640)
	*EXPORT**********EXPORT**********EXPORT**********EXPORT**********EXPORT*				
98–99	Y07–67 CHASSIS, REALTIME DAMPING (F45), EUROPEAN PROVISIONS (VD1) (EXPORT)	09360571	1	695.00	MODULE, ELEK SUSP CONT (RTD MODULE/FAST SHOCK)

cardiagn.com

02	Y ARABIC LANGUAGE LABEL (VBX)	15053409	1	9.25	LABEL, A/C REFRIG & BAT & FAN BLADE & RAD FIL CAP CAUTION ....
01–02	Y07–67 ARABIC LANGUAGE LABEL (VBX)	15746390	1	9.25	LABEL, BAT CAUTION .....
97–98	Y F/SEAT INFL RST SYS (AK5), MAN RST SYS (AX4) (EXPORT)	10426427	1	9.25	LABEL, CHILD ST LOCATION .....
97	Y	12556699	1	N.L.	LABEL, DRIVETRAIN REMOVAL NTC ...
98–99	Y 6–SPD M/TRANS (MM6)	12556699	1	N.L.	LABEL, DRIVETRAIN REMOVAL NTC ...
00	Y 6–SPD M/TRANS (MM6), 4–SPD A/TRANS (M30)	12556699	1	N.L.	LABEL, DRIVETRAIN REMOVAL NTC ...
01–02	Y 6–SPD M/TRANS (MM6), MANUAL 6 SPD O/D TRANS, TREMEC (M12), 4–SPD A/TRANS (M30)	12556699	1	N.L.	LABEL, DRIVETRAIN REMOVAL NTC ...
97–98	Y	10292511	1	9.25	LABEL, FAN BLADE & INFL RST & ENG CLG & A/C REFRIG CAUTION .....
99	Y (1ST DES)	10292511	1	9.25	LABEL, FAN BLADE & INFL RST & ENG CLG & A/C REFRIG CAUTION (1ST DES VEH W/ EVAP TUBE ORIFICE ON RR TUBE; 2ND DES SEE 10432250) .....
99	Y (2ND DES)	10432250	1	9.25	LABEL, FAN BLADE & INFL RST & ENG CLG & A/C REFRIG CAUTION (2ND DES VEH W/ EVAP TUBE ORIFICE ON FRT TUBE;1ST DES SEE 10292511) ....
00	Y	10432250	1	9.25	LABEL, FAN BLADE & INFL RST & ENG CLG & A/C REFRIG CAUTION (EVAP TUBE ORIFICE ON FRT TUBE) .....
01–02	Y	10308343	1	9.25	LABEL, FAN BLADE & INFL RST & ENG CLG & A/C REFRIG CAUTION (EVAP TUBE ORIFICE ON FRT TUBE) .....
97–02	Y	10299631	1	9.25	LABEL, I/P PASS KNEE BOLS PNL IDENT .....
97	Y	15001737	2	9.25	LABEL, INFL RST SYS CAUTION (140.0X40.0) ....
98–00	Y07- 67 CANADIAN (Z49)	10408963	2	9.25	LABEL, INFL RST SYS CAUTION (130.0X65.0) .....
98–99	Y07–67 (EXC CANADIAN (Z49)	15001737	2	9.25	LABEL, INFL RST SYS CAUTION (140.0X40.0) .....
99–00	Y37 CANADIAN (Z49)	10408963	2	9.25	LABEL, INFL RST SYS CAUTION (130.0X65.0) .....
99	Y37 (EXC CANADIAN (Z49)	15001737	2	9.25	LABEL, INFL RST SYS CAUTION (140.0X40.0) ....
00–02	Y (C88), (EXC CANADIAN (Z49)	15002610	2	9.25	LABEL, INFL RST SYS CAUTION ... ..
98	Y F/SEAT INFL RST SYS (AK5)	15012285	1	9.25	LABEL, INFL RST SYS INFO (NEXT GENERATION AIR BAG) .....
97–02	Y F/SEAT INFL RST SYS (AK5)	26017956	1	9.25	LABEL, INFL RST SYS SERV NTC .....
00–02	Y	15766394	1	9.25	LABEL, MERCURY DISPOSAL NTC ....
97–02	Y	10443718	AR	9.25	LABEL, ODOM SERV NTC (ENGLISH AND FRENCH) .....
01–02	YY37	09594076	1	9.25	LABEL, TIRE MAX SPD CAUTION .....
97	Y 5.7G (LS1), FED EMIS SYS (NF2), (EXC POWERTRAIN CONT MODULE (K29), LEADED FUEL EMIS EXPORT (NM8), CANADIAN (Z49)	12558627	1	9.25	LABEL, VEH EMIS CONT INFO (AKB) ..
97	Y 5.7G (LS1), CALIF EMIS, TIER 1 (NB6)	12558628	1	9.25	LABEL, VEH EMIS CONT INFO (AKC) ..

cardiagn.com

8.808 FLASHLIGHT – LABEL – TAG, Emission, Cautionary and Informative(Con't)

97	Y 5.7G (LS1), FED EMIS SYS (NF2), CANADIAN (Z49), (EXC LEADED FUEL EMIS EXPORT (NM8)	12558629	1	9.25	LABEL, VEH EMIS CONT INFO (AKD) ..
98	Y 5.7G (LS1), FED EMIS SYS (NF2), (EXC LEADED FUEL EMIS EXPORT (NM8), EMIS OVERRIDE (NN5), POWERTRAIN CONT MODULE (K29)	12559752	1	9.25	LABEL, VEH EMIS CONT INFO (FJU) ..
99	Y 5.7G (LS1), FED EMIS SYS (NF2), (EXC POWERTRAIN CONT MODULE (K29)	12560553	1	9.25	LABEL, VEH EMIS CONT INFO (LAC) ..
99	Y 5.7G (LS1), CALIF EMIS, TIER 1 (NB6), (EXC POWERTRAIN CONT MODULE (K29), CANADIAN (Z49) .	12560554	1	9.25	LABEL, VEH EMIS CONT INFO (LAD) ..
00	Y 5.7G (LS1), FED EMIS SYS (NF2), (EXC POWERTRAIN CONT MODULE (K29)	12562425	1	9.25	LABEL, VEH EMIS CONT INFO (PAY) ...
00	Y 5.7G (LS1), CALIF EMIS LEV (NC1), (EXC POWERTRAIN CONT MODULE (K29)	12562426	1	9.25	LABEL, VEH EMIS CONT INFO (PAZ) ..
01	Y 5.7G (LS1)	12564047	1	8.75	LABEL, VEH EMIS CONT INFO (NYB) ..
01	Y 5.7S (LS6)	12572217	1	9.25	LABEL, VEH EMIS CONT INFO (NYC) ..
02	Y 5.7G (LS1)	12565747	1	9.25	LABEL, VEH EMIS CONT INFO (CYA) ..
02	Y 5.7S (LS6)	12570324	1	9.25	LABEL, VEH EMIS CONT INFO (CYB) ..
97–00	Y	15002618	1	9.55	TAG, INFL RST I/P MDL CAUTION .....
01–02	Y	10447122	1	9.55	TAG, INFL RST I/P MDL CAUTION .....
	*EXPORT**********EXPORT**********EXPORT**********EXPORT**********EXPORT*				
99–00	Y F/SEAT INFL RST SYS (AK5), MAN RST SYS (AX4) (EXPORT)	10426427	1	9.25	LABEL, CHILD ST LOCATION .....
01–02	Y F/SEAT INFL RST SYS (AK5), LABEL CHILD SEAT LOCATION (VJ4) (EXPORT)	10426427	1	9.25	LABEL, CHILD ST LOCATION .....
00–02	Y07–67 (EXC C88)	15001737	2	9.25	LABEL, INFL RST SYS CAUTION (140.0X40.0) .....
01–02	Y07–67 ARABIC LANGUAGE LABEL (VBX)	15749556	2	9.25	LABEL, INFL RST SYS CAUTION (ARABIC) .....
98	Y 5.7G (LS1), EMIS OVERRIDE (NN5), (EXC POWERTRAIN CONT MODULE (K29), LEADED FUEL EMIS EXPORT (NM8), CANADIAN (Z49)	12560250	1	9.25	LABEL, VEH EMIS CONT INFO (FNS) ..

10.235 BRACKET – NUT – PAD – PANEL – RETAINER, Instrument Panel Pad

97–02	Y	10289379	1	91.75	BRACKET, I/P DRVR KNEE BOLS (10.230) .....
97–02	Y	10289378	1	27.00	BRACKET, I/P DRVR KNEE BOLS OTR .
97–02	Y	10282775	1	20.30	BRACKET, I/P PASS KNEE BOLS .....
97–02	Y	25536302	4	3.33	NUT, I/P DRVR KNEE BOLS BRKT (4.2X1.41 TAPPING) (SPL) (03.430) .
97–02	Y	25536302	1	3.33	NUT, I/P DRVR KNEE BOLS OTR BRKT (4.2X1.41 TAPPING) (SPL) (03.430) ..
97	Y	10237960	4	.46	NUT, I/P PASS KNEE BOLS (M6X1.0) (10.512) .....
98–00	Y	10410398	4	*.51	NUT, I/P PASS KNEE BOLS (M6X1.0 ITR "D" THD) (10.512) .....
97–02	Y	17988488	6	*1.03	NUT, I/P UPR TR PAD (TO I/P) (M4.2X1.41) (PUSH–IN FOR 12MM SQ HOLE) (10.252) .....

cardiagn.com

10.235 BRACKET – NUT – PAD – PANEL – RETAINER, Instrument Panel Pad(Con't)

97–02	Y	25536302	2	3.33	NUT, I/P UPR TR PAD (4.2X1.41 TAPPING) (SPL) (03.430)
97–02	Y (EXC HEAD UP DISPLAY (UV6)	10303150	1	745.00	PAD, I/P UPR TR (W/ CTLTS & DUCTS) (BLACK)
97–98	Y	10406513	1	745.00	PAD, I/P UPR TR (BLACK)
97–02	Y (EXC HEAD UP DISPLAY (UV6)	10443974	1	745.00	PAD, I/P UPR TR (LESS OTLTS & DUCTS) (BLACK)
99–02	Y HEAD UP DISPLAY (UV6)	10303149	1	745.00	PAD, I/P UPR TR (INCLS BEZELS, DUCT & OUTLETS) (BLACK)
99–00	Y (EXC HEAD UP DISPLAY (UV6)	10406513	1	745.00	PAD, I/P UPR TR (BLACK)
99–02	Y HEAD UP DISPLAY (UV6)	10443975	1	745.00	PAD, I/P UPR TR (LESS BEZELS, DUCT & OUTLETS) (BLACK)

12.980 BAR – BOLT – BRACE – BRACKET – EXTENSION – INSULATOR – PANEL KIT – PLATE – RAIL – REINFORCEMENT – SPACER – SUPPORT, Floor Pan

97–01	Y	10293680	RH	60.75	BRACE, FLR PNL TUN FRT
97–01	Y	10444631	LH	60.75	BRACE, FLR PNL TUN FRT
02	Y	10438452	RH	59.05	BRACE, FLR PNL TUN FRT (#35)
02	Y	10438453	LH	59.05	BRACE, FLR PNL TUN FRT (#35)
97–01	Y	10293681	LH	50.75	BRACE, FLR PNL TUN RR
97–01	Y	10293682	RH	50.75	BRACE, FLR PNL TUN RR
02	Y	10438455	LH		BRACE, FLR PNL TUN RR (#36)
02	Y	10438456	RH		BRACE, FLR PNL TUN RR (#36)
97–02	Y	10262059	LH	13.70	BRACE, U/B FRT S/RL UPR (07.039)
97–02	Y	10262060	RH	13.70	BRACE, U/B FRT S/RL UPR (07.039)
97–02	Y	10271958	1	25.00	BRACKET, DRVR F/RST
97–02	Y	10284285	LH	5.70	BRACKET, FLR PNL TUN PNL SI FRT
97–02	Y	10284286	RH	5.70	BRACKET, FLR PNL TUN PNL SI FRT
97–02	Y	10284287	LH	5.70	BRACKET, FLR PNL TUN PNL SI RR
97–02	Y	10284288	RH	5.70	BRACKET, FLR PNL TUN PNL SI RR
97–01	Y	10250149	LH	14.55	BRACKET, FLR PNL TUN REINF
97–01	Y	10250150	RH	14.55	BRACKET, FLR PNL TUN REINF
02	Y	10449844	LH	14.15	BRACKET, FLR PNL TUN REINF (#32)
02	Y	10449845	RH	14.15	BRACKET, FLR PNL TUN REINF (#32)
97–98	Y	10285633	1	12.95	INSULATOR, FLR PNL FRT
99–02	Y	10285633	1	12.95	INSULATOR, FLR PNL FRT (RH ONLY)
97–02	Y	20464593	1	12.90	INSULATOR, FLR PNL FRT CTR (54" WIDE, SOLD BY THE FOOT, CUT AS REQ) (15.492)
97–02	Y	12533430	LH	559.00	RAIL, U/B FRT SI (INCLUDES NUT 10281493)
97–02	Y	12533431	RH	559.00	RAIL, U/B FRT SI (INCLUDES NUT 10281493)
97–02	Y	12533432	LH	559.00	RAIL, U/B RR SI
97–02	Y	12533433	RH	559.00	RAIL, U/B RR SI
97–02	Y	12533434	LH	503.00	RAIL, U/B SI (CTR)
97–02	Y	12533435	RH	503.00	RAIL, U/B SI (CTR)
97–02	Y	10278039	1	3.33	SPACER, DRVR F/RST BRKT
97	Y	10253535	2	8.53	SPACER, U/B S/RL (#107) (RED)
97	Y	10257863	2	8.53	SPACER, U/B S/RL (#104) (BLUE)

cardiagn.com

13.100 CONNECTOR, Body Wiring

97-02	Y	12085536	1	29.85	CONNECTOR, INLINE-TO BODY HARN (BLACK) (4-WAY M) (W/LEADS) (02.535) (AC-DELCO #PT144)
97	Y	12101822	1	33.42	CONNECTOR, INLINE-TO BODY HARN (GRAY) (8-WAY F) (W/LEADS) (02.535) (AC-DELCO #PT214)
97	Y	12101876	1	27.54	CONNECTOR, INLINE-TO BODY HARN (6-WAY M) (W/LEADS) (02.535) (AC-DELCO #PT267)
97	Y	15305888	1	30.36	CONNECTOR, INLINE-TO BODY HARN (6-WAY F W/LEADS) (13.090) (AC-DELCO #PT1032)
01-02	Y EUROPEAN PROVISIONS (VD1) (EXPORT)	12047817	1	1.73	CONNECTOR, INLINE-TO BODY HARN (BLUE) (4-WAY M) (W/O LEADS) (09.656)
01-02	Y	12117271	1	59.43	CONNECTOR, INLINE-TO BODY HARN (WHITE) (8-WAY F W/LEADS) (02.535) (AC-DELCO #PT444)
02	YY67 4-SPD A/TRANS (M30), A/C FRT AUTO/AUX CONT (CJ2), T&T WHL (N37), (EXC TAIL & S/LP (T89) (EXPORT)	12085536	1	29.85	CONNECTOR, INLINE-TO BODY HARN (BLACK) (4-WAY M) (W/LEADS) (02.535) (AC-DELCO #PT144)
97-02	Y	12103188	1	1.89	CONNECTOR, INLINE-TO DR HARN (10-WAY MALE M/P 150 W/O LEADS. (BLUE) .) (BLUE) (10-WAY M., W/O LEADS) (02.530)
97-02	Y	15305872	1	33.15	CONNECTOR, INLINE-TO DR HARN (RR) (BLACK) (6-WAY M W/LEADS) (AC-DELCO #PT1013)
99	Y	12101827	1	37.50	CONNECTOR, INLINE-TO DR HARN (3-WAY M) (W/LEADS) (02.535) (AC-DELCO #PT219)
02	YY67 4-SPD A/TRANS (M30), A/C FRT AUTO/AUX CONT (CJ2), T&T WHL (N37), (EXC TAIL & S/LP (T89) (EXPORT)	12103188	1	1.89	CONNECTOR, INLINE-TO DR HARN (10-WAY MALE M/P 150 W/O LEADS. (BLUE)) (BLUE) (10-WAY M, W/O LEADS) (02.530)
02	YY67 4-SPD A/TRANS (M30), A/C FRT AUTO/AUX CONT (CJ2), T&T WHL (N37), (EXC TAIL & S/LP (T89) (EXPORT)	15305872	1	33.15	CONNECTOR, INLINE-TO DR HARN (RR) (BLACK) (6-WAY M W/LEADS) (AC-DELCO #PT1013)
97-02	Y	12101835	2	20.56	CONNECTOR, INLINE-TO DR LK ACTR MOT (2-WAY F) (W/LEADS) (W/SEAL) (02.535) (AC-DELCO #PT247)
97-02	Y	12085536	1	29.85	CONNECTOR, INLINE-TO O/S RR VIEW MIR (BLACK) (4-WAY M) (W/LEADS) (02.535) (AC-DELCO #PT144)
97-02	Y	12101827	2	37.50	CONNECTOR, INLINE-TO O/S RR VIEW MIR (8-WAY M) (W/LEADS) (02.535) (AC-DELCO #PT219)
97-02	Y	15305872	1	33.15	CONNECTOR, INLINE-TO PWR ST (RR) (BLACK) (6-WAY M W/LEADS) (AC-DELCO #PT1013)
02	YY67 4-SPD A/TRANS (M30), A/C FRT AUTO/AUX CONT (CJ2), T&T WHL (N37), (EXC TAIL & S/LP (T89) (EXPORT)	15305872	1	33.15	CONNECTOR, INLINE-TO PWR ST (RR) (BLACK) (6-WAY M W/LEADS) (AC-DELCO #PT1013)

cardiagn.com

97-02	Y	12101825	2	18.01	CONNECTOR, INLINE-TO R/CMPT LID LAT REL SOL (GRAY) (2-WAY F W/LEADS) (INDEX TAB CTR CAVITY A&B) (02.535) (AC-DELCO #PT217)
97-02	Y	12117271	1	59.43	CONNECTOR, INLINE-TO RR BODY HARN (WHITE) (8-WAY F W/LEADS) (02.535) (AC-DELCO #PT444)
97-02	Y	12085481	2	18.12	CONNECTOR, INLINE-TO S/S MIR LP (BLACK) (2-WAY M W/LEADS) (02.535) (AC-DELCO #PT103)
99	Y	12101822	1	33.42	CONNECTOR, INLINE-TO S/S MIR LP (GRAY) (8-WAY F) (W/LEADS) (02.535) (AC-DELCO #PT214)
99	Y07-67	12101827	1	37.50	CONNECTOR, INLINE-TO S/S MIR LP (8-WAY M) (W/LEADS) (02.535) (AC-DELCO #PT219)
01-02	Y	12101822	1	33.42	CONNECTOR, INLINE-TO S/S MIR LP (GRAY) (8-WAY F) (W/LEADS) (02.535) (AC-DELCO #PT214)
97	Y	12085481	2	18.12	CONNECTOR, INLINE-TO ST BELT SW (BLACK) (2-WAY M W/LEADS) (02.535) (AC-DELCO #PT103)
97-02	Y	12126487	1	38.52	CONNECTOR, SW-DR AJAR IND (4-WAY F) (W/LEADS) (02.383) (AC-DELCO #PT757)

cardiagn.com

ILLUSTRATION INDEX

	TITLE	GRID
1997–2002	Y SUSPENSION/FRONT	4–E4
1997–1998	Y STEERING GEAR ASM	4–E12
1999	Y37 STEERING GEAR ASM (NV7)	4–E12
1999	Y07–67 STEERING GEAR ASM	4–E12
2000–2002	Y STEERING GEAR ASM	4–E12
1997–2002	Y STEERING WHEEL & HORN PARTS	4–E15
1997–1999	Y STEERING COLUMN (TILT)	4–E17
1999–2000	Y STEERING COLUMN (TILT & TLSCP)(N37)	4–E20
2000	Y STEERING COLUMN (TILT)	4–E24
2001–2002	Y STEERING COLUMN (POWER TELESCOPE TILT)(N37)	4–F2
2001–2002	Y STEERING COLUMN (TILT)	4–F6
1997–2002	Y STEERING PUMP ASM	4–F9
1997	Y STEERING PUMP MOUNTING & RELATED PARTS	4–F11
1998–2002	Y STEERING PUMP MOUNTING & RELATED PARTS	4–F14

cardiagn.com

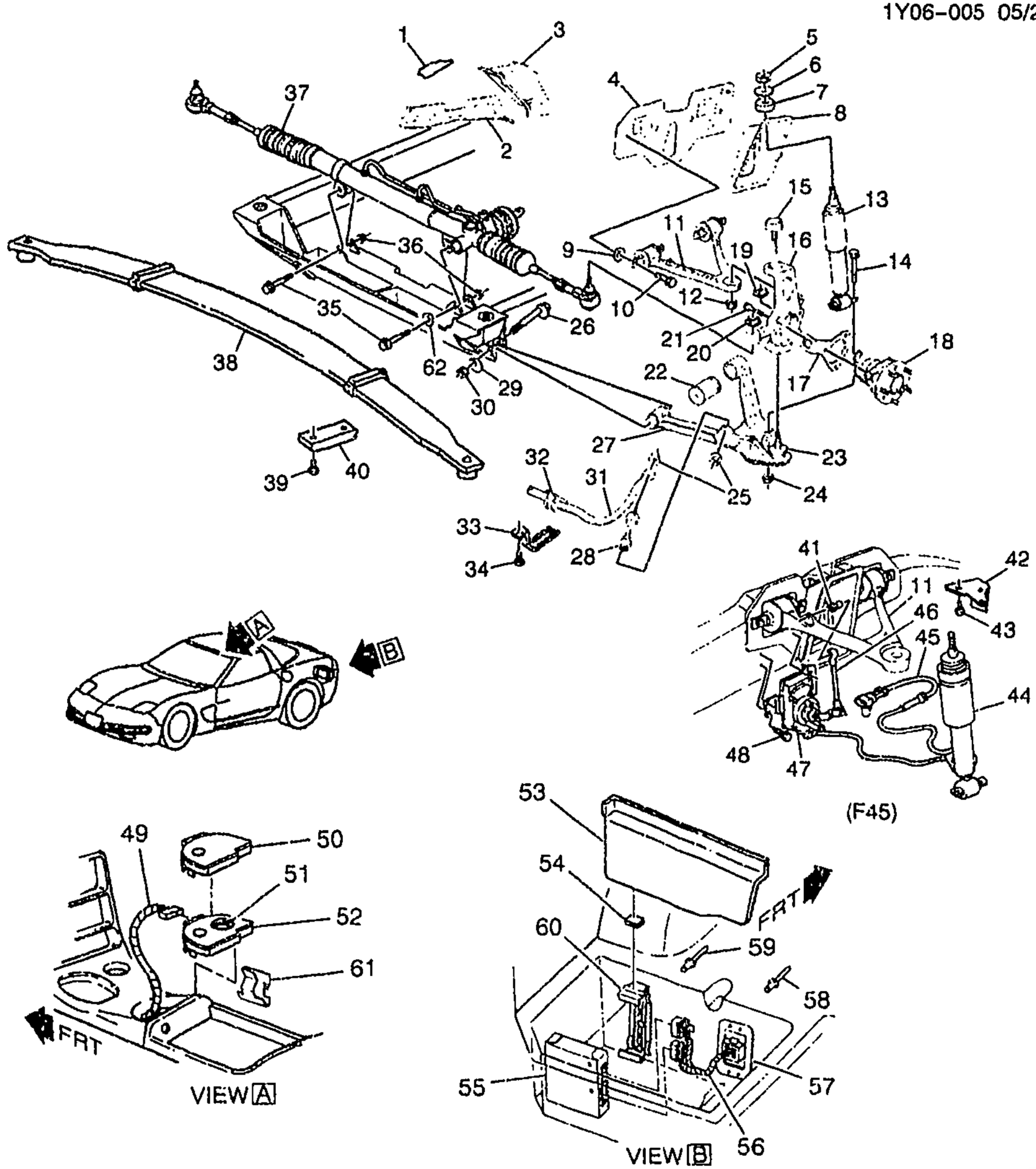

1Y06-005

1997-2002 Y SUSPENSION/FRONT

1.	4-B10	7.395	REINFORCEMENT, FRT S/ABS BRKT (LWR)	97-02	Y	LH	10413182
	4-B10	7.395	REINFORCEMENT, FRT S/ABS BRKT (LWR)	97-02	Y	RH	10413183
2.	4-A7	6.177	BRACKET, FRT SUSP UPR CONT ARM (#21)	97-02	Y	LH	10421762

: 2001 GENERAL MOTORS SERVICE PARTS OPERATIONS-CHEVROLET-15Y

cardiagn.com

							1Y06-005
	4-A7	6.177	BRACKET, FRT SUSP UPR CONT ARM (#21)	97-02	Y	RH	10421763
3.	4-B10	7.395	REINFORCEMENT, FRT S/ABS BRKT (UPR)	97-02	Y	LH	10414209
	4-B10	7.395	REINFORCEMENT, FRT S/ABS BRKT (UPR)	97-02	Y	RH	10274240
4.	4-A7	6.177	REINFORCEMENT, FRT UPR CONT ARM BRKT (#20, LWR)	97-01	Y	LH	10421764
	4-A7	6.177	REINFORCEMENT, FRT UPR CONT ARM BRKT (#20, LWR) (AC-DELCO #10421765)	97-01	Y	RH	10421765
	4-B10	7.395	BRACKET, FRT S/ABS UPR	02	Y	LH	10318764
	4-B10	7.395	BRACKET, FRT S/ABS UPR	02	Y	RH	10318765
5.		8.915	NUT, HFH, 10X1.5 6H THD, 21.3 OD, 9.8 THK 13 HEX DR, GRD 9, ZF (FRT S/ABS) (8.917)	97-02		2	10255857
6.	4-B10	7.389	RETAINER, FRT S/ABS INSL	97-02	Y	4	14093133
7.	4-B10	7.388	INSULATOR, FRT S/ABS	00-02	Y (EXC F45)	2	10157966
	4-B10	7.388	INSULATOR, FRT S/ABS (SMALL, UPR)	97-02	Y	2	10157967
8.	4-B10	7.380	BRACKET, FRT S/ABS LWR	97-02	Y	LH	10262061
	4-B10	7.380	BRACKET, FRT S/ABS LWR	97-02	Y	RH	10262062
9.	4-A7	6.163	WASHER, FRT UPR CONT ARM	97-02	Y	8	10289125
10.	4-A7	6.178	BOLT, FRT UPR CONT ARM (M10X1.5X35, 32THD, 10.9) (8.900)	97	Y	8	11515767
	4-A7	6.178	BOLT, FRT UPR CONT ARM (0.029)	97	Y	8	24506340
		8.900	BOLT, HFH, M10X1.5X40, 30 THD, 22.3 OD, 10.9 MAT, 7114M FIN. MACH, RED BDY (FRT UPR CONT ARM)	98-02		8	11515768
11.	4-A7	6.168	ARM, FRT UPR CONT (COMPOSITE) (INCLS 22)	97-02	Y	LH	10233616
	4-A7	6.168	ARM, FRT UPR CONT (COMPOSITE) (INCLS 22)	97-02	Y	RH	10233617
12.		8.900	NUT, M12X1.75, 10.6 THK, 28.0 OD, 10, 7111M (NUT, S/KNU) (POSN #2, UPR) (8.917)	97-02		2	3537772
13.	4-B9	7.345	ABSORBER, FRT SHK	97-02	Y (FE1) (EXC F45)	2	10431989
	4-B9	7.345	ABSORBER, FRT SHK	97-02	Y (FE3)	2	10431990
	4-B9	7.345	ABSORBER, FRT SHK (AC-DELCO #580-122)	97-98	Y (FE1, F45)	LH	22064825
	4-B9	7.345	ABSORBER, FRT SHK (AC-DELCO #580-123)	97-02	Y (FE1, F45)	RH	22064826
	4-B9	7 345	ABSORBER, FRT SHK (AC-DELCO #580-122)	99-02	Y07-67 (FE1, F45)	LH	22064825
14.		8.900	BOLT/SCREW, HFH, M8X1.25X55, 9.8, 7114M, 180D DOG PT (FRT S/ABS LWR BRKT)	97-02		4	11516494
15.		N.S.	STUD, BALL JOINT (PART OF KNUCKLE)				
16.	4-A7	6.020	KNUCKLE, STRG (COMMON KNUCKLE FOR LH/FRT & RH/RR) (W/BALL JOINT)	97-02	Y	LH	10237239
	4-A7	6.020	KNUCKLE, STRG (COMMON KNUCKLE FOR RH/FRT & LH/RR) (W/BALL JOINT)	97-02	Y	RH	10237238

cardiagn.com

							1Y06-005
17.	4-A8	6.323	SHIELD, FRT BRK BRG (USE AS A.B.S. WIRE GUIDE FRT)	97-02	Y	LH	10263081
	4-A8	6.323	SHIELD, FRT BRK BRG (USE AS A.B.S. WIRE GUIDE FRT)	97-02	Y	RH	10263082
18.	4-A8	6.311	BEARING, FRT WHL (ID:LM501349-LM501310) (INCLS CUP&CONE) (1 5/8 ID X 2 57/64 OD X 25/32 THK) (TIMKEN) (5.536) (AC-DELCO #S21)	00	Y	2	457232
	4-A8	6.311	BEARING, FRT WHL (W/INTEGRAL SENSOR) (AC-DELCO #20-569)	97-02	Y	2	7470569
19.	4-A7	6.009	NUT, S/KNU (POSN #1, LWR) (M14X2.0 6H THD) (6.164)	97-02	Y	2	10282253
20.	4-A8	6.234	NUT, STRG LNKG OTR TIE ROD (M12.0X1.75X10.6) (8.917)	97-02	Y	2	3537772
21.	4-N18	5.812	BOLT, FRT WHL HUB	97-02	Y	6	10414261
22.		N.S.	BUSHING, FRT UPR CONT ARM (PART OF 11)		.....		
23.		N.S.	STUD, FRT LWR CONT ARM BALL		.....		
24.		8.917	NUT, HFH, M8X1.25X8.8, 17.9 OD, 10 DIN, PREV TORQUE (FRT S/ABS LWR BRKT)	97-02	.....	4	11517031
25.		8.917	NUT, HEX FLG PREVAILING TORQ (M12X1.75X14) (ZO 10) (FRT STAB SHF LINK)	97-02	.....	4	11515744
26.	4-A7	6.174	BOLT, FRT LWR CONT ARM FRT (138.6MM LGXM14X2.6) (5.383) .	97-02	Y	4	10254819
27.	4-A7	6.168	ARM, FRT LWR CONT (W/BUSHINGS & BALL STUD) (PERM MOLD ALUM)	97-02	Y	LH	10233629
	4-A7	6.168	ARM, FRT LWR CONT (W/BUSHINGS & BALL STUD) (PERM MOLD ALUM)	97-02	Y	RH	10233630
28.	4-B8	7.240	LINK, FRT STAB SHF	97-99	Y	2	10423035
	4-B8	7.240	LINK, FRT STAB SHF	00-01	Y (FE1)	2	10423035
	4-B8	7.240	LINK, FRT STAB SHF	00	Y (FE3)	2	10424745
	4-B8	7.240	LINK, FRT STAB SHF	01	Y (FE3, FE4)	2	10424745
	4-B8	7.240	LINK, FRT STAB SHF	02	Y	2	10435298
29.	4-A7	6.178	CAM, FRT LWR CONT ARM ADJ (5.381)	97-02	Y	4	10254818
30.		8.917	NUT, HFH LK 14X2X16 19.6 OD 10 7111M (FRT LWR CONT ARM)	97-02	.....	4	11516382
31.	4-B8	7.241	SHAFT, FRT STAB	00-02	Y (FE3)	1	10424741
	4-B8	7.241	SHAFT, FRT STAB (AC-DELCO #10419094)	01-02	Y (FE4)	1	10419094
	4-B8	7.241	SHAFT, FRT STAB (HOLLOW BAR)	97-02	Y (FE1)	1	10227075
	4-B8	7.241	SHAFT, FRT STAB (HOLLOW BAR)	97-99	Y (FE3)	1	10234745
32.	4-B9	7.243	INSULATOR, FRT STAB SHF	97-02	Y (FE1)	2	10280525
	4-B9	7.243	INSULATOR, FRT STAB SHF	97-99	Y (FE3)	2	10280526
	4-B9	7.243	INSULATOR, FRT STAB SHF ...	00-01	Y (FE3)	2	10424742
	4-B9	7.243	INSULATOR, FRT STAB SHF (AC-DELCO #10419095)	01-02	Y (FE4)	2	10419095
33.	4-B9	7.242	CLAMP, FRT STAB SHF INSL	97-02	Y	2	10254830

cardiagn.com

							1Y06-005
34.	4-B9	7.242	BOLT, FRT STAB SHF INSL CLA (HEX W/CON WA-10X1.5X25) (6.525)	97-02	Y	4	1638817
35.	4-A9	6.509	BOLT, S/GR	98	Y (JAG)	1	10422130
	4-A9	6.509	BOLT, S/GR	99-02	Y	2	10422130
	4-A9	6.509	BOLT, S/GR (TORQ MATING PART) (M12X1.75X80) (8.900)	97	Y	2	11515816
36.		8.917	NUT, HEX FLG PREVAILING TORQ (M12X1.75X14) (ZO 10) (S/GR)	97-02		2	11515744
37.	4-A9	6.508	GEAR KIT, STRG (REMAN) (AC-DELCO #36-9166)	97	Y	1	26056983
	4-A9	6.508	GEAR KIT, STRG (REMAN) (AC-DELCO #36-9191)	99	Y07-67	1	26075933
	4-A9	6.508	GEAR KIT, STRG (REMAN) (AC-DELCO #36-9191)	99	Y37 (NV7)	1	26075933
	4-A9	6.508	GEAR KIT, STRG (REMAN) (AC-DELCO #36-9191)	00-02	Y	1	26075933
	4-A9	6.508	GEAR KIT, STRG (REMAN) (AC-DELCO #36-9224)	01	Y37	1	26079818
	4-A9	6.508	GEAR KIT, STRG (REMAN) (GEAR WIRING HARNESS ROUTES ALONG BOTTOM OF GEAR, FOR 2ND DESIGN SEE 26075861) (AC-DELCO #36-9166)	98	Y (1ST DES)	1	26056983
	4-A9	6.508	GEAR KIT, STRG (REMAN) (GEAR WIRING HARNESS ROUTES ALONG TOP OF GEAR, FOR 1ST DES SEE 26056983) (AC-DELCO #36-9192)	98	Y (2ND DES)	1	26075861
38.	4-B10	7.412	SPRING, FRT	97-02	Y (FE1) (EXC F45)	1	22178728
	4-B10	7.412	SPRING, FRT (INCLS RIDE HEIGHT ADJUSTER)	97-00	Y (FE3)	1	22178729
	4-B10	7.412	SPRING, FRT	97-98	Y (FE1, F45)	1	22178748
	4-B10	7.412	SPRING, FRT	99-02	Y07-67 (FE1, F45)	1	22178748
	4-B10	7.412	SPRING, FRT (INCLS RIDE HEIGHT ADJUSTER)	01-02	Y (FE3, FE4)	1	22178729
39.		8.900	BOLT, M10X1.5X 25 POINTED, 21MM THD, 21.5 OD (FRT SPR RET)	97-02		4	11515765
40.	4-B11	7.425	RETAINER, FRT SPR (7.545)	97-02	Y	2	10280659
41.	4-B14	7.477	STUD, ELEK SUSP FRT POSN SEN LINK BALL	97-02	Y07-67 (F45)	2	10271003
42.	4-B13	7.475	BRACKET, ELEK SUSP FRT POSN SEN LEAD (BLACK)	97-02	Y (F45)	LH	10291213
	4-B13	7.475	BRACKET, ELEK SUSP FRT POSN SEN LEAD (BLACK)	97-02	Y (F45)	RH	10291214
43.		8.977	SCREW, HEX W/FLAT WA (FRT S/ABS CONT ACTR LEAD BRKT)	97-02		2	12337828
44.	4-B9	7.345	ABSORBER, FRT SHK (AC-DELCO #580-122)	97-98	Y (FE1, F45)	LH	22064825
	4-B9	7.345	ABSORBER, FRT SHK (AC-DELCO #580-122)	99-02	Y07-67 (FE1, F45)	LH	22064825
	4-B9	7.345	ABSORBER, FRT SHK (AC-DELCO #580-123)	97-02	Y (FE1, F45)	RH	22064826

cardiagn.com

							1Y06–005
45.	4–N6	2.530	CONNECTOR, INLINE–TO ELEK SUSP POSN SEN (BLACK) (3–WAY F) (W/LEADS) (2.383) (AC–DELCO #PT420)	97	Y (F45)	4	12117025
	4–N6	2.530	CONNECTOR, INLINE–TO ELEK SUSP POSN SEN (BLACK) (3–WAY F) (W/LEADS) (2.383) (AC–DELCO #PT420)	98	Y (F45, JAG)	4	12117025
	4–N6	2.530	CONNECTOR, INLINE–TO ELEK SUSP POSN SEN (BLACK) (3–WAY F) (W/LEADS) (2.383) (AC–DELCO #PT420)	99–02	Y	4	12117025
46.	4–B14	7.477	LINK, ELEK SUSP FRT POSN SEN	97–02	Y (F45)	LH	22153639
	4–B14	7.477	LINK, ELEK SUSP FRT POSN SEN	97–02	Y (F45)	RH	22153640
47.	4–B13	7.475	SENSOR, ELEK SUSP FRT POSN (W/FRT VERT ACCLRM) ..	97–02	Y (F45)	LH	22153635
	4–B13	7.475	SENSOR, ELEK SUSP FRT POSN (W/FRT VERT ACCLRM) ..	97–02	Y (F45)	RH	22153636
48.		8.977	SCREW, HEX W/FL WA M4.2X2.25X20 TAP POR (ELEK SUSP FRT POSN)	97–02	.....	6	11508443
49.		N.S.	HARNESS, I/P WRG (SEE GROUP 10 FOR DETAILED ILLUSTRATED VIEW)		.....		
50.	4–N15	4.710	SWITCH, ELEK TRAC CONT	98–99	Y (EXC F45, JL4)	1	12135154
	4–N15	4.710	SWITCH, ELEK TRAC CONT	98–99	Y (JL4) (EXC F45)	1	12198726
	4–N15	4.710	SWITCH, ELEK TRAC CONT	00	Y (EXC C88, F45, JL4) .	1	10440629
	4–N15	4.710	SWITCH, ELEK TRAC CONT	00	Y (JL4, C88) (EXC F45)	1	10440631
	4–N15	4.710	SWITCH, ELEK TRAC CONT	00	Y (C88) (EXC F45, JL4)	1	12135154
	4–N15	4.710	SWITCH, ELEK TRAC CONT .. .	01	Y07–67 (JL4, C88) (EXC F45)	1	10440631
	4–N15	4.710	SWITCH, ELEK TRAC CONT	01	Y37 (C88)	1	10440631
	4–N15	4.710	SWITCH, ELEK TRAC CONT	02	Y (C88) (EXC F45)	1	10440631
	4–N15	4.710	SWITCH, ELEK TRAC CONT (W/ASR, W/O RTD)	97	Y (EXC F45)	1	12135154
	4–N15	4.710	SWITCH, ELEK TRAC CONT	00–01	Y07–67 (JL4) (EXC F45, C88) (EXPORT) ...	1	12198726
	4–N15	4.710	SWITCH, ELEK TRAC CONT	02	Y (EXC F45, C88) (EXPORT)	1	12198726
51.		N.S.	KNOB, ELEK SUSP SW (PART OF 52)		.....		
52.	4–N15	4.710	SWITCH, ELEK TRAC CONT (INCLS 51)	98–99	Y (EXC F45, JL4)	1	12135154
	4–N15	4.710	SWITCH, ELEK TRAC CONT (INCLS 51)	98–99	Y (JL4) (EXC F45)	1	12198726
	4–N15	4.710	SWITCH, ELEK TRAC CONT (INCLS 51)	00	Y (EXC C88, F45, JL4) .	1	10440629
	4–N15	4.710	SWITCH, ELEK TRAC CONT (INCLS 51)	00	Y (JL4, C88) (EXC F45)	1	10440631
	4–N15	4.710	SWITCH, ELEK TRAC CONT (INCLS 51)	00	Y (C88) (EXC F45, JL4)	1	12135154
	4–N15	4.710	SWITCH, ELEK TRAC CONT (INCLS 51)	01	Y07–67 (JL4, C88) (EXC F45)	1	10440631
	4–N15	4.710	SWITCH, ELEK TRAC CONT (INCLS 51)	01	Y37 (C88)	1	10440631

cardiagn.com

	4-N15	4.710	SWITCH, ELEK TRAC CONT (INCLS 51)	02	Y (C88) (EXC F45)	1	10440631
	4-N15	4.710	SWITCH, ELEK TRAC CONT (W/ASR, W/O RTD) (INCLS 51)	97	Y (EXC F45)	1	12135154
	4-N15	4.710	SWITCH, ELEK TRAC CONT (INCLS 51)	00-01	Y07-67 (JL4) (EXC F45, C88) (EXPORT)	1	12198726
	4-N15	4.710	SWITCH, ELEK TRAC CONT (INCLS 51)	02	Y (EXC F45, C88) (EXPORT)	1	12198726
53.	4-B11	7.450	COVER, ELEK SUSP CONT MDL FIN	97	Y07 (F45)	LH	10286260
	4-B11	7.450	COVER, ELEK SUSP CONT MDL FIN	98-00	Y07-67 (F45)	LH	10286260
	4-B11	7.450	COVER, ELEK SUSP CONT MDL FIN	01-02	Y07 (F45)	LH	10286260
	4-B11	7.450	COVER, ELEK SUSP CONT MDL FIN (BLACK)	01-02	Y67 (F45, 19I)	1	10440580
	4-B11	7.450	COVER, ELEK SUSP CONT MDL FIN (PEWTER)	01-02	Y67 (F45, 92I)	1	10440581
	4-B11	7.450	COVER, ELEK SUSP CONT MDL FIN (OAK)	01-02	Y67 (F45, 67I)	1	10440582
	4-B11	7.450	COVER, ELEK SUSP CONT MDL FIN (RED)	01-02	Y67 (F45, 70I)	1	10440583
54.	4-B11	7.450	RETAINER, ELEC SUSP CONT MDL FIN CVR (14.640)	97-02	Y07 (F45)	1	10267772
	4-B11	7.450	RETAINER, ELEC SUSP CONT MDL FIN CVR (14.640)	98-02	Y67 (F45)	1	10267772
55.	4-B11	7.450	MODULE, ELEK SUSP CONT	00-02	YY07-67 (F45)	1	9366711
	4-B11	7.450	MODULE, ELEK SUSP CONT (RTD MODULE/FAST SHOCK) (AC-DELCO #9360581)	97-99	Y (F45) (EXC VD1)	1	9360581
	4-B11	7.450	MODULE, ELEK SUSP CONT (RTD MODULE/FAST SHOCK)	98-99	Y07-67 (F45, VD1) (EXPORT)	1	9360571
56.	4-M14	2.480	HARNESS, TRANS WRG (AC-DELCO #12163195)	97	Y (M30) (EXC F45)	1	12163195
	4-M14	2.480	HARNESS, TRANS WRG (AC-DELCO #12163196)	97	Y (MM6) (EXC F45)	1	12163196
	4-M14	2.480	HARNESS, TRANS WRG (AC-DELCO #12163705)	97	Y (M30, F45)	1	12163705
	4-M14	2.480	HARNESS, TRANS WRG (AC-DELCO #12163706)	97	Y (MM6, F45)	1	12163706
	4-M14	2.480	HARNESS, TRANS WRG (AC-DELCO #12163195)	98	Y (M30) (EXC F45, JAG)	1	12163195
	4-M14	2.480	HARNESS, TRANS WRG (AC-DELCO #12163196)	98	Y (MM6) (EXC F45, JAG, VD1)	1	12163196
	4-M14	2.480	HARNESS, TRANS WRG (AC-DELCO #12163705)	98	Y (M30, F45) (EXC JAG)	1	12163705
	4-M14	2.480	HARNESS, TRANS WRG (AC-DELCO #12163706)	98	Y (MM6, F45) (EXC JAG, VD1)	1	12163706
	4-M14	2.480	HARNESS, TRANS WRG	98	Y (M30, JAG) (EXC F45)	1	12163790
	4-M14	2.480	HARNESS, TRANS WRG	98	Y (MM6, JAG) (EXC F45, VD1)	1	12163791
	4-M14	2.480	HARNESS, TRANS WRG	98	Y (M30, F45, JAG)	1	12163792
	4-M14	2.480	HARNESS, TRANS WRG	98	Y (MM6, F45, JAG) (EXC VD1)	1	12163793
	4-M14	2.480	HARNESS, TRANS WRG (AC-DELCO #12189826)	99-00	Y (M30) (EXC F45)	1	12189826

cardiagn.com

							1Y06-005
	4-M14	2.480	HARNESS, TRANS WRG (AC-DELCO #12189827)	99-00	Y (MM8) (EXC F45, VD1)	1	12189827
	4-M14	2.480	HARNESS, TRANS WRG (AC-DELCO #12189828)	99-00	Y (M30, F45)	1	12189828
	4-M14	2.480	HARNESS, TRANS WRG (AC-DELCO #12189829)	99-00	Y (MM6, F45) (EXC VD1)	1	12189829
	4-M14	2.480	HARNESS, TRANS WRG	01-02	Y (M30) (EXC F45)	1	10448120
	4-M14	2.480	HARNESS, TRANS WRG	01-02	Y (MM6) (EXC F45, VD1)	1	10448121
	4-M14	2.480	HARNESS, TRANS WRG	01-02	Y (M30, F45)	1	10448122
	4-M14	2.480	HARNESS, TRANS WRG	01-02	Y (MM6, F45) (EXC VD1)	1	10448123
	4-M14	2.480	HARNESS, TRANS WRG	01-02	YY37	1	10448126
	4-B11	7.450	CONNECTOR, MDL-ELEK SUSP CONT (BLUE) (32-WAY F W/O LEADSS) (3.670)	97	Y	1	12110207
	4-B11	7.450	CONNECTOR, MDL-ELEK SUSP CONT (BROWN) (24-WAY F) (W/O LEADS) (MIC/PAC 100) (3.670)	97-00	Y	1	12160778
	4-B11	7.450	CONNECTOR, MDL-ELEK SUSP CONT (BROWN) (32-WAY F, W/O LEADS, MIC/PAC 100) (3.670)	97-00	Y	1	12160779
	4-B11	7.450	CONNECTOR, INLINE-TO ELEK SUSP MDL (BROWN) (24-WAY F) (W/O LEADS) (MIC/PAC 100) (3.670)	01-02	Y	1	12160778
	4-B11	7.450	CONNECTOR, INLINE-TO ELEK SUSP MDL (BROWN) (32-WAY F, W/O LEADS, MIC/PAC 100) (3.670)	01-02	Y	1	12160779
	4-M14	2.480	HARNESS, TRANS WRG (AC-DELCO #12189908)	98	Y (MM6, F45, VD1) (EXC JAG) (EXPORT) ..	1	12189908
	4-M14	2.480	HARNESS, TRANS WRG (AC-DELCO #12189909)	98	Y (MM6, VD1) (EXC F45, JAG) (EXPORT) ..	1	12189909
	4-M14	2.480	HARNESS, TRANS WRG	98	Y (MM6, F45, JAG, VD1) (EXPORT)	1	12189912
	4-M14	2.480	HARNESS, TRANS WRG	98	Y (MM6, JAG, VD1) (EXC F45) (EXPORT) ..	1	12189913
	4-M14	2.480	HARNESS, TRANS WRG (ENHANCE EVAP) (AC-DELCO #12189914)	99-00	Y (MM6, F45, VD1) (EXPORT)	1	12189914
	4-M14	2.480	HARNESS, TRANS WRG (ENHANCE EVAP) (AC-DELCO #12189915)	99-00	Y (MM6, VD1) (EXC F45) (EXPORT)	1	12189915
	4-M14	2.480	HARNESS, TRANS WRG (ENHANCE EVAP)	01-02	Y (MM3, F45, VD1) (EXPORT)	1	10448124
	4-M14	2.480	HARNESS, TRANS WRG (ENHANCE EVAP)	01-02	Y (MM6, VD1) (EXC F45) (EXPORT)	1	10448125
57.	4-N16	4.720	PLATE, ELEK BRK CONT WRG HARN GROM TAP (3.675)	97-02	Y (F45)	1	14090618
58.		N.S.	RIVET, ELEK BRK CONT WRG HARN GROM TAP PLT		.....	2	
59.		N.S.	RIVET, ELEK SUSP CONT MDL BRKT		.....	2	
60.	4-B11	7.450	BRACKET, ELEK SUSP CONT MDL	97-02	Y (F45)	1	10280844

cardiagn.com

							1Y06-005
61.	4-N19	10.252	CLIP, ACSRY SW PNL (10.230) ..	97-02	Y	2	10195501
62.	4-A9	6.509	WASHER, S/GR	97	Y	1	10406711
	4-A9	6.509	WASHER, S/GR	98	Y (JAG)	1	10406711
	4-A9	6.509	WASHER, S/GR	99-02	Y	1	10406711

RPO DEFINITIONS
C88 – SWITCH INFL RST I/P MDL MAN SUPPRESSION -- DELETE
FE1 – SUSPENSION SYSTEM,SOFT RIDE
FE3 – SUSPENSION SYSTEM,SPORT
FE4 – SUSPENSION SYSTEM SPECIAL RIDE & HANDLING
F45 – CHASSIS CONTINUOUS VALVE REAL TIME DAMPING
JAG – BRAKE PROVISIONS ABS LOCATION
JL4 – CONTROL ACTIVE BRAKE
MM6 – TRANSMISSION MAN 6 SPD, BORG WARNER, 85MM, 1ST 2.66, 6TH 0.50, O/D
M30 – TRANSMISSION,AUTOMATIC 4 SPEED,4L60E,ELECTRONIC
NV7 – STEERING,POWER,VARIABLE EFFORT
VD1 – PROVISION OPTIONS,EUROPE(EXPORT)
19I – INTERIOR TRIM,BLACK
67I – INTERIOR TRIM,CAMEL
70I – INTERIOR TRIM,TORCH RED
92I – INTERIOR TRIM SHALE/PEWTER

cardiagn.com

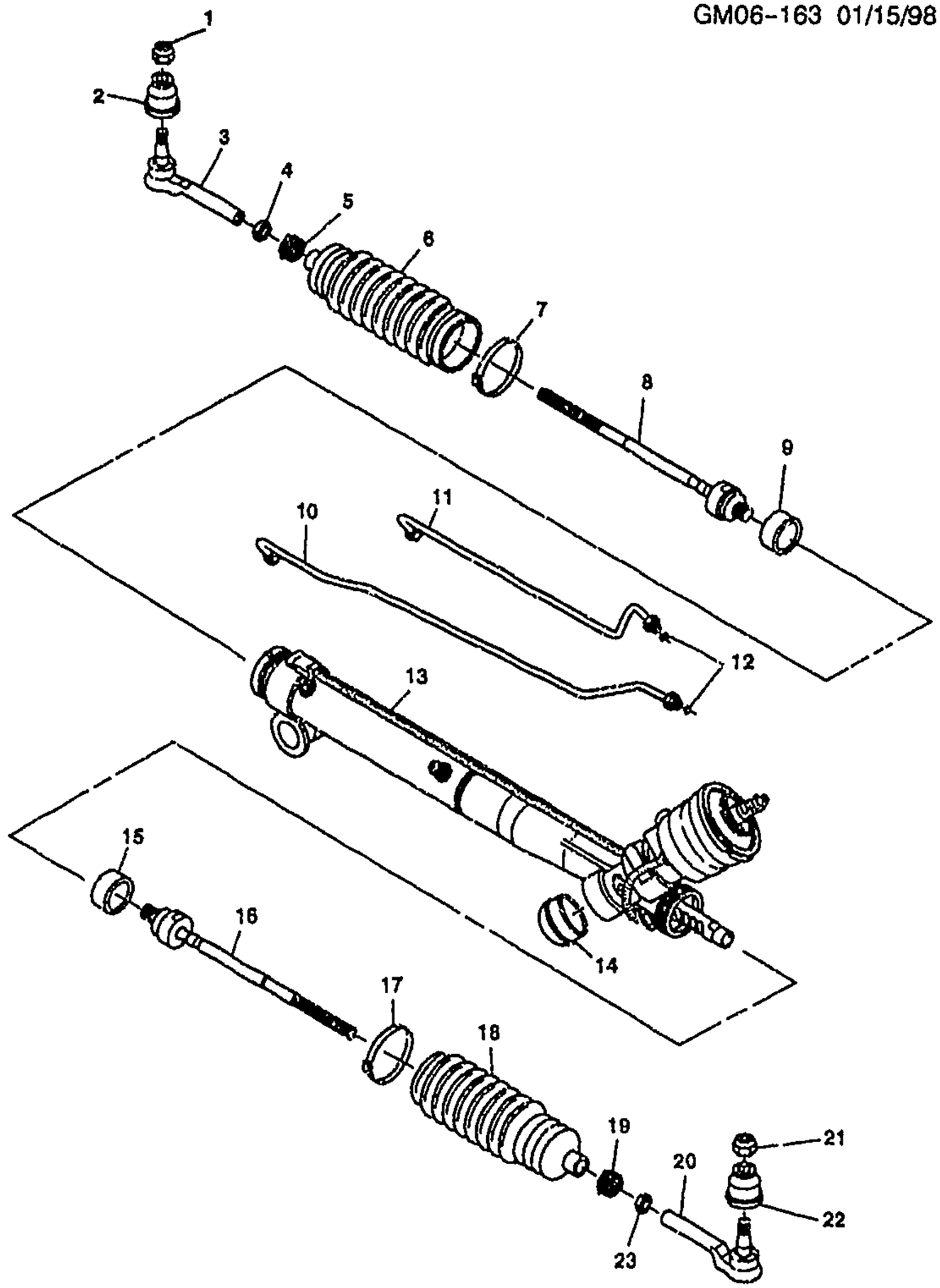

S98Y-0-0

GM06-163

1997-1998 Y STEERING GEAR ASM
1999 Y37 STEERING GEAR ASM (NV7)
1999 Y07-67 STEERING GEAR ASM
2000-2002 Y STEERING GEAR ASM

1.	8.900	NUT, M12X1.75, 10.6 THK, 28.0 OD, 10, 7111M (STRG LNKG OTR TIE ROD) (8.917)	97-02	AR	3537772

© 2001 GENERAL MOTORS SERVICE PARTS OPERATIONS-CHEVROLET-15Y

cardiagn.com

2.		N.S.	SEAL, STRG LNKG OTR TIE ROD (PART OF 3)				
3.	4-A8	6.233	ROD KIT, STRG LNKG OTR TIE (INCLS 2)	97-98	Y	2	26071832
	4-A8	6.233	ROD KIT, STRG LNKG OTR TIE (INCLS 2)	99-02	Y	2	26071832
	4-A8	6.233	ROD KIT, STRG LNKG OTR TIE (INCLS 2)	97-99	Y07	2	26071832
	4-A8	6.233	ROD KIT, STRG LNKG OTR TIE (INCLS 2)	99	Y37	2	26071832
	4-A8	6.233	ROD KIT, STRG LNKG OTR TIE (INCLS 2)	99	Y67	2	26071832
4.		8.915	NUT, HEX (PART OF 8) (6.526)	97-02		AR	26017267
5.	4-A8	6.242	CLAMP, S/GR BOOT (PART OF 6) (TIE ROD END) (OTR)	97-02	Y	2	26013335
6.	4-A8	6.242	BOOT KIT, S/GR (INCLS 5, 7) (INCLS BOOT, CLAMPS, GREASE)	97-02	Y	2	21011025
	4-A8	6.242	BOOT KIT, S/GR (INCLS 5, 7) (AC-DELCO #45A7055)	97-98	Y0 (LS1)	1	88910854
	4-A8	6.242	BOOT KIT, S/GR (INCLS 5, 7) (AC-DELCO #45A7055)	97-98	YY (LS1)	1	88910854
7.	4-A8	6.242	CLAMP, S/GR BOOT (PART OF 6) (HOUSING END) (INR)	97-02	Y	2	26029756
8.	4-A8	6.230	ROD KIT, STRG LNKG INR TIE (INCLS 4) (6.233)	97-02	Y	2	26055105
9.	4-A16	6.865	RING, S/GR SHF DPNR (R&P) (R&P)	97-02	Y	2	7831234
10.	4-A15	6.670	PIPE, S/GR (INCLS 12) (LONG)	97-98	Y	LH	26056780
	4-A15	6.670	PIPE, S/GR (INCLS 12) (LONG)	99-02	Y	LH	26056780
11.	4-A15	6.670	PIPE, S/GR (INCLS 12) (SHORT)	00-02	Y	RH	26056779
	4-A15	6.670	PIPE, S/GR (INCLS 12) (SHORT)	97-99	Y	RH	26056779
12.	4-A16	6.674	SEAL, S/GR PIPE (O RING) (PART OF 10, 11)	97-99	Y07	2	26015539
	4-A16	6.674	SEAL, S/GR PIPE (O RING) (PART OF 10, 11)	98-99	Y67	2	26015539
	4-A16	6.674	SEAL, S/GR PIPE (O RING) (PART OF 10, 11)	99	Y37	2	26015539
	4-A16	6.674	SEAL, S/GR PIPE (O RING) (PART OF 10, 11)	00-02	Y	2	26015539
13.	4-A9	6.508	GEAR KIT, STRG (REMAN) (AC-DELCO #36-9166)	97	Y	1	26056983
	4-A9	6.508	GEAR KIT, STRG (REMAN) (AC-DELCO #36-9191)	99	Y07-67	1	26075933
	4-A9	6.508	GEAR KIT, STRG (REMAN) (AC-DELCO #36-9191)	99	Y37 (NV7)	1	26075933
	4-A9	6.508	GEAR KIT, STRG (REMAN) (AC-DELCO #36-9191)	00-02	Y	1	26075933
	4-A9	6.508	GEAR KIT, STRG (REMAN) (AC-DELCO #36-9224)	01	Y37	1	26079818
	4-A9	6.508	GEAR KIT, STRG (REMAN) (GEAR WIRING HARNESS ROUTES ALONG BOTTOM OF GEAR. FOR 2ND DESIGN SEE 26075861) (AC-DELCO #36-9166)	98	Y (1ST DES)	1	26056983

cardiagn.com

							GM06-163
	4-A9	6.508	GEAR KIT, STRG (REMAN) (GEAR WIRING HARNESS ROUTES ALONG TOP OF GEAR, FOR 1ST DES SEE 26056983) (AC-DELCO #36-9192)	98	Y (2ND DES)	1	26075861
14.	4-A16	6.807	COVER, S/GR HSG (COVER, DUST) (6.824)	97-02	Y	1	7846884
15.	4-A16	6.865	RING, S/GR SHF DPNR (R&P) (R&P)	97-02	Y	2	7831234
16.	4-A8	6.230	ROD KIT, STRG LNKG INR TIE (INCLS 23) (6.233)	97-98	Y	2	26055105
	4-A8	6.230	ROD KIT, STRG LNKG INR TIE (INCLS 23) (6.233)	99-02	Y	2	26055105
17.	4-A8	6.242	CLAMP, S/GR BOOT (PART OF 18) (HOUSING END) (INR)	97-02	Y	2	26029756
18.	4-A8	6.242	BOOT KIT, S/GR (INCLS 17, 19) (INCLS BOOT, CLAMPS, GREASE)	00-02	Y	2	21011025
	4-A8	6.242	BOOT KIT, S/GR (INCLS 17, 19) (INCLS BOOT, CLAMPS, GREASE)	97-99	Y	2	21011025
	4-A8	6.242	BOOT KIT, S/GR (INCLS 17, 19) (AC-DELCO #45A7055)	97-98	Y0 (LS1)	1	88910854
	4-A8	6.242	BOOT KIT, S/GR (INCLS 17, 19) (AC-DELCO #45A7055)	97-98	YY (LS1)	1	88910854
19.	4-A8	6.242	CLAMP, S/GR BOOT (PART OF 18) (TIE ROD END) (OTR)	97-02	Y	2	26013335
20.	4-A8	6.233	ROD KIT, STRG LNKG OTR TIE (INCLS 22)	97-99	Y07	2	26071832
	4-A8	6.233	ROD KIT, STRG LNKG OTR TIE (INCLS 22)	99	Y37	2	26071832
	4-A8	6.233	ROD KIT, STRG LNKG OTR TIE (INCLS 22)	99	Y67	2	26071832
	4-A8	6.233	ROD KIT, STRG LNKG OTR TIE (INCLS 22)	97-02	Y	2	26071832
21.	4-A8	6.234	NUT, STRG LNKG OTR TIE ROD (M12.0X1.75X10.6) (8.917)	97-98	Y	2	3537772
	4-A8	6.234	NUT, STRG LNKG OTR TIE ROD (M12.0X1.75X10.6) (8.917)	99-02	Y	2	3537772
22.		N.S.	SEAL, STRG LNKG OTR TIE ROD (PART OF 20)		.....		
23.		8.915	NUT, HEX (PART OF 16) (6.526) ..	97-02	.....	AR	26017267

RPO DEFINITIONS
LS1 - ENGINE GAS, 8 CYL, 5.7L, SFI, ALUMINUM ENGINE
NV7 - STEERING,POWER,VARIABLE EFFORT

cardiagn.com

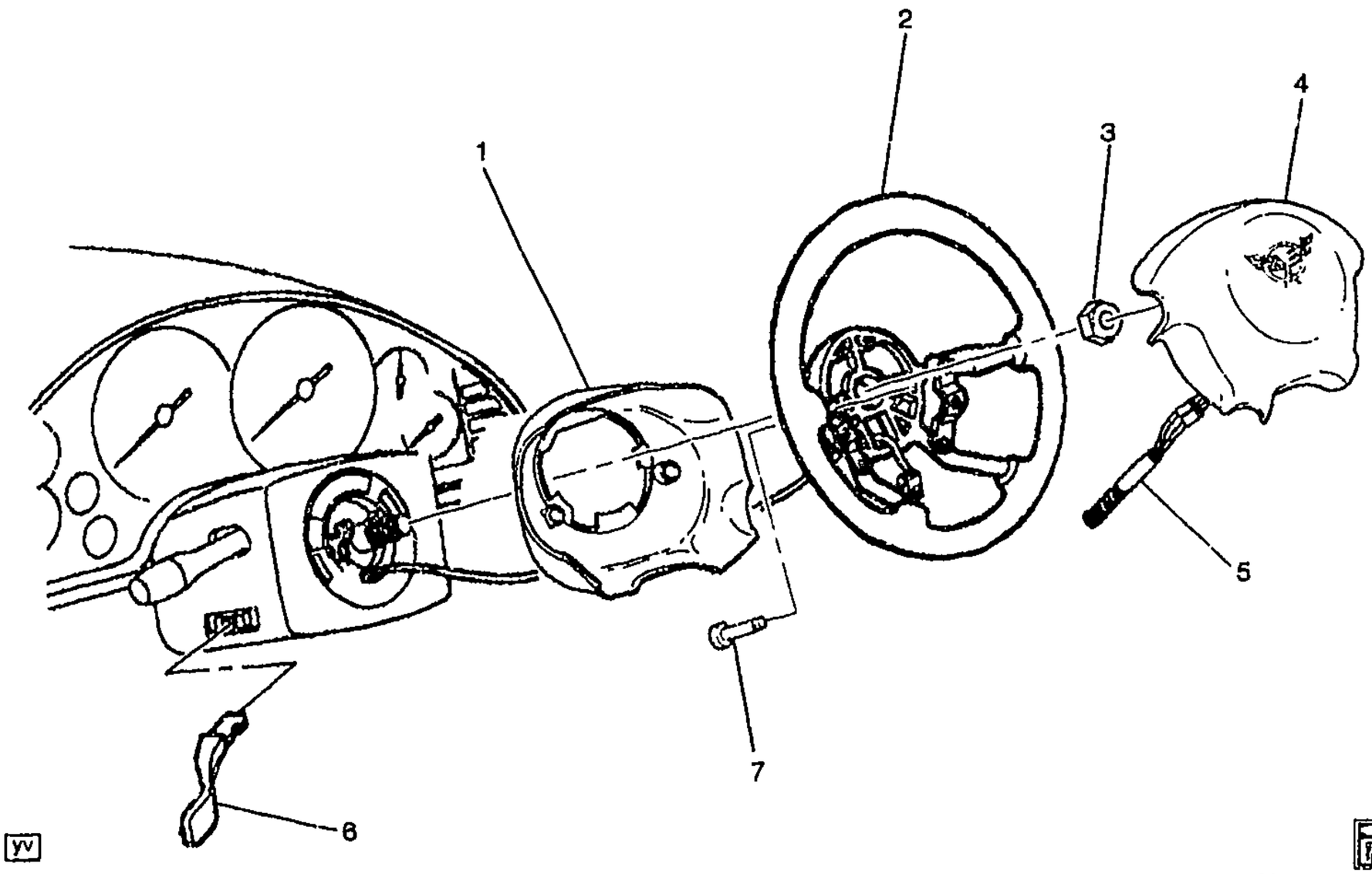

1997-2002 Y STEERING WHEEL & HORN PARTS

1.		N.S.	COVER, STRG WHL HUB (BACKCOVER) (NO LONGER SERVICED SEPARATELY-PART OF WHEEL & HUB COVER)		.....		
2.	4-A10	6.513	WHEEL, STRG	97	Y	1	10424050
	4-A10	6.513	WHEEL, STRG	98	Y07	1	10424050
	4-A10	6.513	WHEEL, STRG	98	Y67 (Z4Z)	1	10419490
	4-A10	6.513	WHEEL, STRG	98	Y67 (EXC Z4Z)	1	10424050
	4-A10	6.513	WHEEL, STRG	99-02	Y	1	10424050
		8.800	GREASE, DIELECTRIC SILICONE 1 OZ. (STRG WHL HUB)	97-02	.....	1	12345579
3.	4-A10	6.515	NUT, STRG WHL (INCLS 5, 7) (M14X1.5) (HFH TORQ PREV) ...	97-02	Y	1	26056108
4.	4-N24	14.865	MODULE, STRG WHL INFL RST (INCLS 5, 7)	97	Y (AK5)	1	10407331
	4-A10	6.512	MODULE, STRG WHL INFL RST (INCLS 5, 7) (14.865)	97	Y (AK5)	1	10407331
	4-N24	14.865	MODULE, STRG WHL INFL RST (INCLS 5, 7)	98	Y (AK5)	1	10411124
	4-A10	6.512	MODULE, STRG WHL INFL RST (INCLS 5, 7) (14.865)	98	Y (AK5)	1	10411124
	4-N24	14.865	MODULE, STRG WHL INFL RST (INCLS 5, 7)	99-02	Y (AK5)	1	10415723
	4-A10	6.512	MODULE, STRG WHL INFL RST (INCLS 5, 7) (14.865)	99-02	Y (AK5)	1	10415723

cardiagn.com

							1Y06–021
5.		N.S.	SPRING, STRG WHL HORN CNCT (PART OF 4)		.....		
6.	4–A10	6.514	LEVER, STRG COL TILT WHL REL	97–02	Y	1	10271070
7.	4–N24	14.865	BOLT, STRG WHL INFL RST MDL (PART OF 4)	97–02	Y (AK5)	2	10406983

RPO DEFINITIONS
AK5 – RESTRAINT SYSTEM,FRONT SEAT,INFLATABLE,DRIVER AND PASSENGER
Z4Z – MERCHANDISED PKG INDY PACE CAR

cardiagn.com

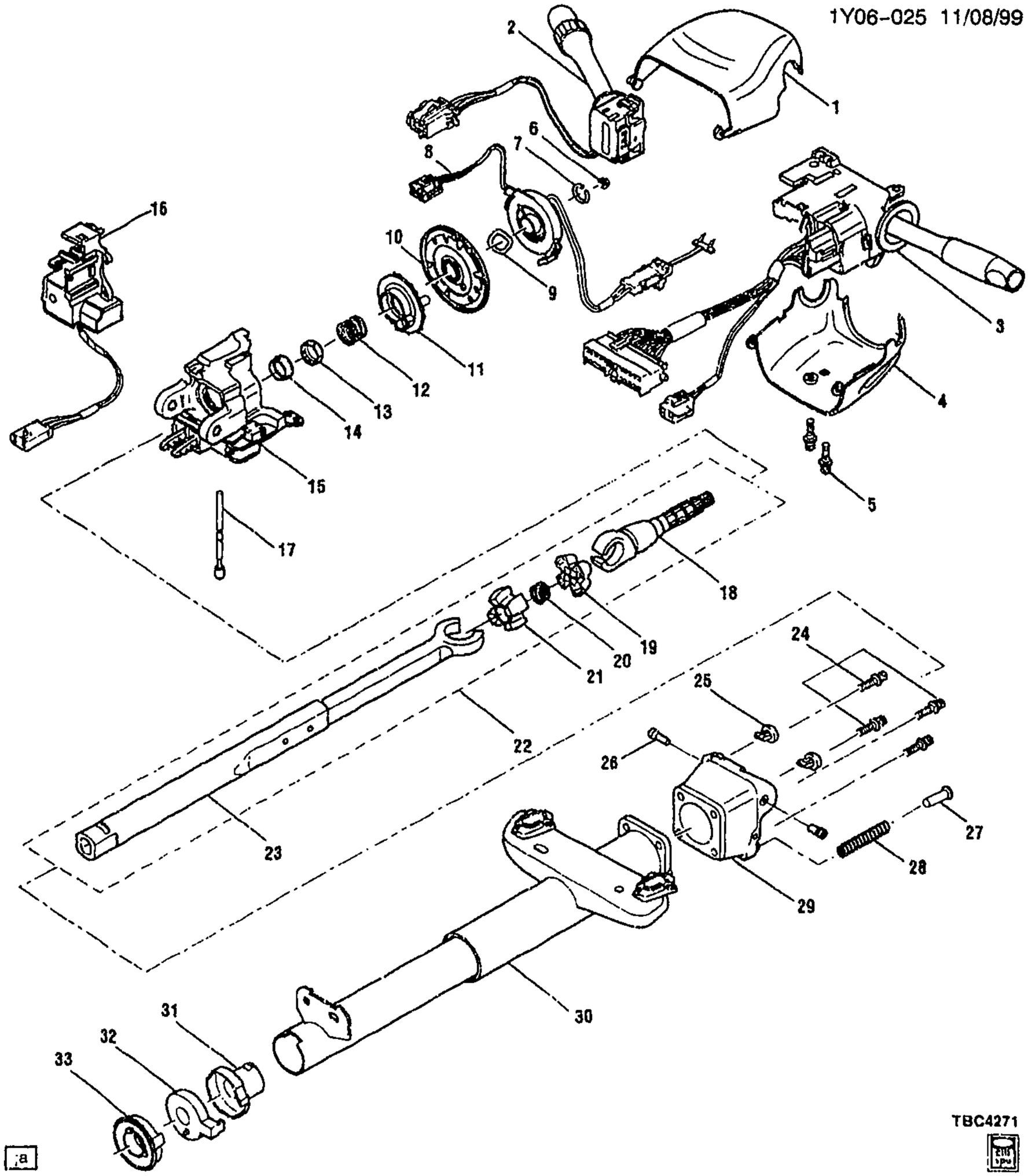

1Y06-025

1997-1999 Y STEERING COLUMN (TILT)

1.	4-A11	6.518	COVER, STRG COL UPR TR	97-99	Y	1	26050879
2.	4-N18	10.163	SWITCH, WSW & WSWA (AC-DELCO #D6363D)	97-99	Y	1	26047377
	4-N18	10.163	SWITCH, WSW & WSWA (AC-DELCO #D6363D)	97-99	Y (EXPORT)	1	26047377

cardiagn.com

							Y06-025
3.	4-N5	2.485	SWITCH, HDLP & T/SIG & CRCONT (W/ LVR) (AC-DELCO #D1512G)	97-99	Y	1	26075870
	4-N14	3.883	SWITCH, HDLP & T/SIG & CRCONT (W/ LVR) (2.485) (AC-DELCO #D1512G)	97-99	Y	1	26075870
4.	4-A11	6.518	COVER, STRG COL LWR TR	97-99	Y	1	26050878
5.	4-A11	6.518	BOLT, STRG COL LWR TR CVR (M5X.8X15) (PAN HD TORX TAP) (6.760)	97-99	Y	4	26036497
6.	4-A10	6.515	NUT, STRG WHL (M14X1.5) (HFH TORQ PREV)	97-99	Y	1	26056108
7.	4-A9	6.500	RING, STRG SHF LK PLT RET (6.524)	97-99	Y	1	5694191
8.	4-N24	14.865	COIL KIT, INFL RST STRG WHL MDL	97-98	Y	1	26087359
	4-N24	14.865	COIL, STRG WHL INFL RST MDL	99	Y	1	26069710
9.	4-N24	14.865	WASHER, STRG WHL INFL RST MDL COIL	97-99	Y	1	26011609
10.	4-A9	6.500	PLATE, STRG SHF LK	97	Y	1	26045147
	4-A9	6.500	PLATE, STRG SHF LK	98	Y (EXC NP7)	1	26045147
	4-A9	6.500	PLATE, STRG SHF LK	99	Y07-67 (EXC NP7)	1	26045147
	4-A9	6.500	PLATE, STRG SHF LK	99	Y37	1	26045147
11.	4-N14	2.896	CAM, T/SIG SW CANC	97-99	Y	1	26044739
12.	4-A12	6.521	SPRING, STRG SHF UPR BRG	97-99	Y	1	26055299
13.	4-A12	6.521	SEAT, STRG SHF UPR BRG RACE	97-99	Y	1	7815184
14.		N.S.	RACE, STRG COL INR (*KIT2)				
15.	4-A11	6.518	HOUSING, STRG COL (INCLS UPPER BRG)	97-99	Y	1	26043199
16.	4-M14	2.195	LOCK, STRG WHL THEFT DTRNT	97-99	Y	1	26050960
17.		N.S.	PIN, ANTI-ROTATION				
18.	4-A13	6.524	SHAFT, UPR STRG (6.500)	97	Y	1	26064247
	4-A13	6.524	SHAFT, UPR STRG (6.500)	98	Y (EXC NP7)	1	26064247
	4-A13	6.524	SHAFT, UPR STRG	98-99	Y (NP7)	1	26073574
	4-A13	6.524	SHAFT, UPR STRG (6.500)	99	Y07-67 (EXC NP7)	1	26064247
19.		N.S.	SPHERE, STRG SHF (*KIT1)				
20.		N.S.	SPRING, JT PRELOAD (*KIT1)				
21.		N.S.	SPHERE, STRG SHF (*KIT1)				
22.		N.S.	SHAFT, STRG (COMPONENT PARTS SERVICED)				
23.	4-A13	6.524	SHAFT, LWR STRG	97-98	Y	1	26050875
	4-A13	6.524	SHAFT, LWR STRG	99	Y07-67 (N37)	1	26061696
	4-A13	6.524	SHAFT, LWR STRG	99	Y (EXC NP7, N37)	1	26071859
24.	4-A10	6.514	BOLT, STRG COL HSG SUPT (M8X1.25X19) (EXT TORX FLG HD DOG PT)	97-99	Y	4	26036495
	4-A10	6.514	BOLT, STRG COL HSG SUPT (M8X1.25X16) (TORX HD)	99	Y07-67 (N37)	4	26003095
25.	4-A11	6.518	BUMPER, STRG COL HSG (NATURAL) (7.2MM HEIGHT)	97-99	Y	1	26035863
	4-A11	6.518	BUMPER, STRG COL HSG	99	Y07-67 (N37)	1	26066598
26.	4-A10	6.514	PIN, STRG COL PIV	97-99	Y	2	26036521
27.	4-A10	6.514	GUIDE, STRG COL SPR	97-99	Y	1	26034561
28.	4-A12	6.521	SPRING, STRG COL TILT	97-98	Y	1	26058800
	4-A12	6.521	SPRING, STRG COL TILT	99	Y	1	26078240

cardiagn.com

							1Y06–025
29.	4–A11	6.518	SUPPORT, STRG COL HSG (CODE SSW, SSY, SSZ, STA, STC, STF, STH, STJ,)	97–98	Y	1	26036309
	4–A11	6.518	SUPPORT, STRG COL HSG (CODE SSW, SSY, SSZ, STA, STC, STF, STH, STJ,)	99	Y07–67 (EXC N37)	1	26036309
	4–A11	6.518	SUPPORT, STRG COL HSG	99	Y07–67 (N37)	1	26068561
	4–A11	6.518	SUPPORT, STRG COL HSG (CODE SSW, SSY, SSZ, STA, STC, STF, STH, STJ,)	99	Y37	1	26036309
30.	4–A11	6.518	JACKET, STRG COL	97–98	Y	1	26050872
	4–A11	6.518	JACKET, STRG COL	99	Y07–67 (EXC N37)	1	26050872
	4–A11	6.518	JACKET, STRG COL	99	Y (N37)	1	26061677
	4–A11	6.518	JACKET, STRG COL	99	Y37	1	26050872
31.	4–A12	6.521	BEARING, STRG SHF LWR (W/ADAPTER)	97–98	Y	1	26052051
	4–A12	6.521	BEARING, STRG SHF LWR (W/ADAPTER)	99	Y	1	26077389
32.	4–A13	6.522	SENSOR, STRG WHL POSN	97–98	Y	1	26055808
	4–A13	6.522	SENSOR, STRG WHL POSN	99	Y	1	26058286
33.	4–A12	6.521	RETAINER, STRG SHF LWR BRG (6.522)	97–99	Y	1	26050877

SERVICE KITS

1.	4–A13	6.525	SPHERE KIT, STRG SHF (INCL 19–21) (INCLS SPR JOINT PRELOAD)	97–99	Y	1	26057095
	4–A13	6.525	SPHERE KIT, STRG SHF (INCL 19–21)	99	Y	1	26066321
2.	4–A12	6.521	BEARING KIT, STRG SHF UPR (INCL 14) (W/RACE)	97–99	Y	2	26001827

RPO DEFINITIONS
NP7 – STEERING COLUMN(EXPORT)
N37 – STEERING COLUMN,TILT AND TELESCOPING

cardiagn.com

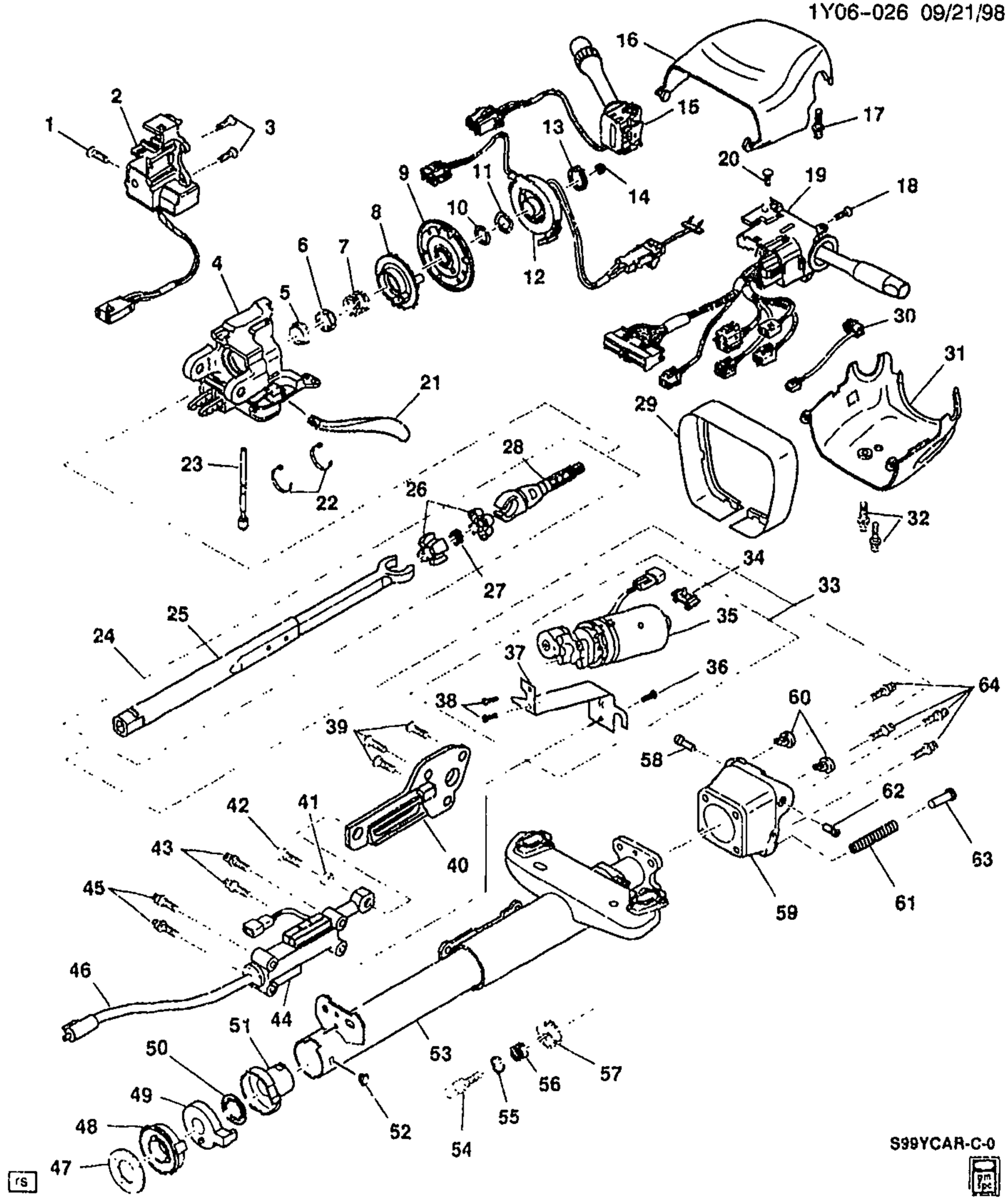

S99YCAR-C-0

1Y06-026

1999-2000 Y STEERING COLUMN (TILT & TLSCP)(N37)

1.	4-M14	2.188	BOLT, IGN LK CYL CASE (M5X.8X15) (PAN HD TORX TAP) (6.760)	99-00 Y	3	26036497
2.	4-M14	2.195	LOCK, STRG WHL THEFT DTRNT	99-00 Y	1	26050960

cardiagn.com

							1Y06-026
3.	4-M14	2.188	BOLT, IGN LK CYL CASE (M5X.8X15) (PAN HD TORX TAP) (6.760)	99-00	Y	3	26036497
4.	4-A11	6.518	HOUSING, STRG COL (INCLS UPPER BRG)	99-00	Y	1	26043199
5.	4-A9	6.500	RING, STRG SHF LK PLT RET (6.524)	99-00	Y	1	[illegible]
6.	4-A12	6.521	SEAT, STRG SHF UPR BRG RACE	99	Y	1	[illegible]
	4-A12	6.521	SEAT, STRG SHF UPR BRG RACE	00	Y	1	26090233
7.	4-A12	6.521	SPRING, STRG SHF UPR BRG	99-00	Y	1	26055299
8.	4-N14	2.896	CAM, T/SIG SW CANC	99-00	Y	1	26044739
9.	4-A9	6.500	PLATE, STRG SHF LK	99	Y07-67 (EXC NP7)	1	26045147
	4-A9	6.500	PLATE, STRG SHF LK	00	Y07-67 (EXC NP7)	1	26090892
10.		N.S.	RACE, STRG COL INR (*KIT1)				
11.	4-N24	14.865	WASHER, STRG WHL INFL RST MDL COIL	99-00	Y	1	26011609
12.	4-N24	14.865	COIL, STRG WHL INFL RST MDL	99-00	Y	1	26069710
13.		8.934	RING, SNAP (STL PL .750 DIA) (STRG WHL INFL RST MDL COIL RET)	99-00		AR	274414
14.	4-A10	6.515	NUT, STRG WHL (M14X1.5) (HFH TORQ PREV)	99-00	Y	1	26056108
15.	4-N18	10.163	SWITCH, WSW & WSWA (AC-DELCO #D6363D)	99-00	Y	1	26047377
	4-N18	10.163	SWITCH, WSW & WSWA (AC-DELCO #D6363D)	99-00	Y (EXPORT)	1	26047377
16.	4-A11	6.518	COVER, STRG COL UPR TR	99-00	Y	1	26050879
17.	4-A11	6.518	BOLT, STRG COL UPR CVR (M4.55 TAP X15) (EXT TORX FLG HD) (2.188)	99-00	Y	1	26036496
18.	4-N13	2.895	BOLT, T/SIG SW (M5X.8X15) (PAN HD TORX TAP) (6.760)	99-00	Y	4	26036497
19.	4-N14	3.883	SWITCH, HDLP & T/SIG & CRCONT (W/ LVR) (2.485) (AC-DELCO #D1512G)	99-00	Y	1	26075870
	4-N5	2.485	SWITCH, HDLP & T/SIG & CRCONT (W/ LVR) (AC-DELCO #D1512G)	99-00	Y	1	26075870
20.	4-N13	2.895	BOLT, T/SIG SW (M5X.8X15) (PAN HD TORX TAP) (6.760)	99-00	Y	4	26036497
21.	4-A10	6.514	LEVER, STRG COL TILT WHL REL	99-00	Y	1	10271070
22.		N.S.	STRAP, WRG HARN				
23.		N.S.	PIN, ANTI-ROTATION				
24.	4-A13	6.524	SHAFT, LWR STRG (INCLS 25)	99-00	Y07-67 (N37)	1	26061696
25.		N.S.	SHAFT, LWR STRG (PART OF 24)				
26.		N.S.	CENTERING SPHERE (*KIT2)				
27.		N.S.	JOINT PRELOAD SPRING (*KIT2)				
28.	4-A13	6.524	SHAFT, UPR STRG (6.500)	99-00	Y07-67 (EXC NP7)	1	26064247
29.	4-A11	6.518	SHROUD, STRG COL	99-00	Y07-67 (N37)	1	26064446
30.	4-A10	6.514	SWITCH, STRG COL TLSCP	99-00	Y (N37)	1	26061700
31.	4-A11	6.518	COVER, STRG COL LWR TR	99-00	Y	1	26050878

cardiagn.com

							1Y06-026
32.	4-A11	6.518	BOLT, STRG COL LWR TR CVR (M5X.8X15) (PAN HD TORX TAP) (6.760)	99-00	Y	4	26036497
33.		N.S.	BOLT, STRG COL LWR TR CVR				
[illegible]	[illegible].13	6.52[illegible]	RETAINER, STRG COL TLSCP [illegible] MOT WRG HARN CONN (6.514)	99-00	Y (N37)	1	26067485
35.	4-A10	6.514	MOTOR, STRG COL TLSCP ACTR	99-00	Y (N37)	1	26061693
36.		8.900	SCREW ASM, MACH HEX HD DOG PNT (WSW SYS MDL)	99-00		AR	11516570
37.	4-A12	6.521	BRACKET, STRG COL TLSCP ACTR (6.514)	99-00	Y (N37)	1	26061694
38.	4-A10	6.514	BOLT, STRG COL TLSCP ACTR (M5X.8X15) (PAN HD TORX TAP) (6.760)	99-00	Y (N37)	3	26036497
	4-A10	6.514	BOLT, STRG COL TLSCP ACTR (M6X1.0X28.25) (PAN HD TORX TAP) (6.521)	99-00	Y (N37)	4	26052098
	4-A10	6.514	BOLT, STRG COL TLSCP ACTR	99-00	Y (N37)	2	26061695
39.	4-N14	4.010	BOLT, TRANS CONT LVR BOWL PLT (GRAY) (M6X1.0X14.0)	99-00	Y (N37)	3	26020231
40.	4-A10	6.514	ADAPTER, STRG COL TLSCP ACTR (INCLS 41, 42)	99-00	Y (N37)	1	26052086
	4-A10	6.514	ADAPTER, STRG COL TLSCP ACTR (INCLS 41, 42)	99-00	Y (N37)	1	26061674
	4-A10	6.514	ADAPTER STRG COL TLSCP ACTR (INCLS 41, 42)	99-00	Y (N37)	1	26061675
	1-A10	6.514	ADAPTER, STRG COL TLSCP ACTR (BOLT/SCREW) (INCLS 41, 42)	99-00	Y (N37)	1	26052087
41.		N.S.	BALL, TLSCP DRIVE) (PART OF 40)				
42.		N.S.	BOLT, TLSCP DRIVE) (PART OF 40)				
43.	4-A10	6.514	BOLT, STRG COL TLSCP ACTR (M5X.8X15) (PAN HD TORX TAP) (6.760)	99-00	Y (N37)	3	26036497
	4-A10	6.514	BOLT, STRG COL TLSCP ACTR (M6X1.0X28.25) (PAN HD TORX TAP) (6.521)	99-00	Y (N37)	4	26052098
	4-A10	6.514	BOLT, STRG COL TLSCP ACTR	99-00	Y (N37)	2	26061695
44.	4-A12	6.521	ACTUATOR, STRG COL TLSCP (6.514)	99-00	Y (N37)	1	26061673
45.	4-A10	6.514	BOLT, STRG COL TLSCP ACTR (M5X.8X15) (PAN HD TORX TAP) (6.760)	99-00	Y (N37)	3	26036497
	4-A10	6.514	BOLT, STRG COL TLSCP ACTR (M6X1.0X28.25) (PAN HD TORX TAP) (6.521)	99-00	Y (N37)	4	26052098
	4-A10	6.514	BOLT, STRG COL TLSCP ACTR	99-00	Y (N37)	2	26061695
46.	4-A12	6.521	CABLE, STRG COL TLSCP ACTR (6.514)	99-00	Y (N37)	1	26061676
47.	4-A13	6.525	SEAL, STRG SHF	99-00	Y	1	26056695
48.	4-A12	6.521	RETAINER, STRG SHF LWR BRG (6.522)	99-00	Y	1	26050877
49.	4-A13	6.522	SENSOR, STRG WHL POSN	99-00	Y	1	26058286

cardiagn.com

							1Y06-026
50.	4-A12	6.521	RETAINER, STRG SHF LWR BRG SPR	99-00	Y (N37)	2	7847029
51.	4-A12	6.521	BEARING, STRG SHF LWR (W/ADAPTER)	99-00	Y	1	26077389
52.	4-A11	6.518	PLUG, STRG COL JKT HOLE	99-00	Y07-67 (N37)	1	7840594
53.	4-A11	6.518	JACKET, STRG COL (INCLS 54)	99-00	Y (N37)	1	26061677
54.		N.S.	PIN, STRG COL HSG SUPT GDE (PART OF 53)				
55.	4-A11	6.518	RING, STRG COL HSG SUPT GDE SPR RET	99-00	Y (N37)	1	26052097
56.	4-A11	6.518	SPRING, STRG COL HSG SUPT GDE	99-00	Y (N37)	1	26052103
57.	4-A11	6.518	GUIDE, STRG COL HSG SUPT	99-00	Y (N37)	1	26052095
58.	4-A10	6.514	PIN, STRG COL PIV	99-00	Y	2	26036521
59.	4-A11	6.518	SUPPORT, STRG COL HSG	99-00	Y07-67 (N37)	1	26068561
60.	4-A11	6.518	BUMPER, STRG COL HSG (NATURAL) (7.2MM HEIGHT)	99-00	Y	1	26035863
	4-A11	6.518	BUMPER, STRG COL HSG	99-00	Y07-67 (N37)	1	26066598
61.	4-A12	6.521	SPRING, STRG COL TILT	99-00	Y	1	26078240
62.	4-A10	6.514	PIN, STRG COL PIV	99-00	Y	2	26036521
63.	4-A10	6.514	GUIDE, STRG COL SPR	99-00	Y	1	26034561
64.	4-A10	6.514	BOLT, STRG COL HSG SUPT (M8X1.25X19) (EXT TORX FLG HD DOG PT)	99	Y	4	26036495
	4-A10	6.514	BOLT, STRG COL HSG SUPT (M8X1.25X16) (TORX HD)	99-00	Y07-67 (N37)	4	26003095

SERVICE KITS

1.	4-A12	6.521	BEARING KIT, STRG SHF UPR (INCLS 10) (W/RACE)	99-00	Y	2	26001827
2.	4-A13	6.525	SPHERE KIT, STRG SHF (INCLS 26, 27) (INCLS SPR JOINT PRELOAD)	99-00	Y	1	26057095
	4-A13	6.525	SPHERE KIT, STRG SHF (INCLS 26, 27)	99-00	Y	1	26066321

RPO DEFINITIONS
NP7 – STEERING COLUMN(EXPORT)
N37 – STEERING COLUMN,TILT AND TELESCOPING

cardiagn.com

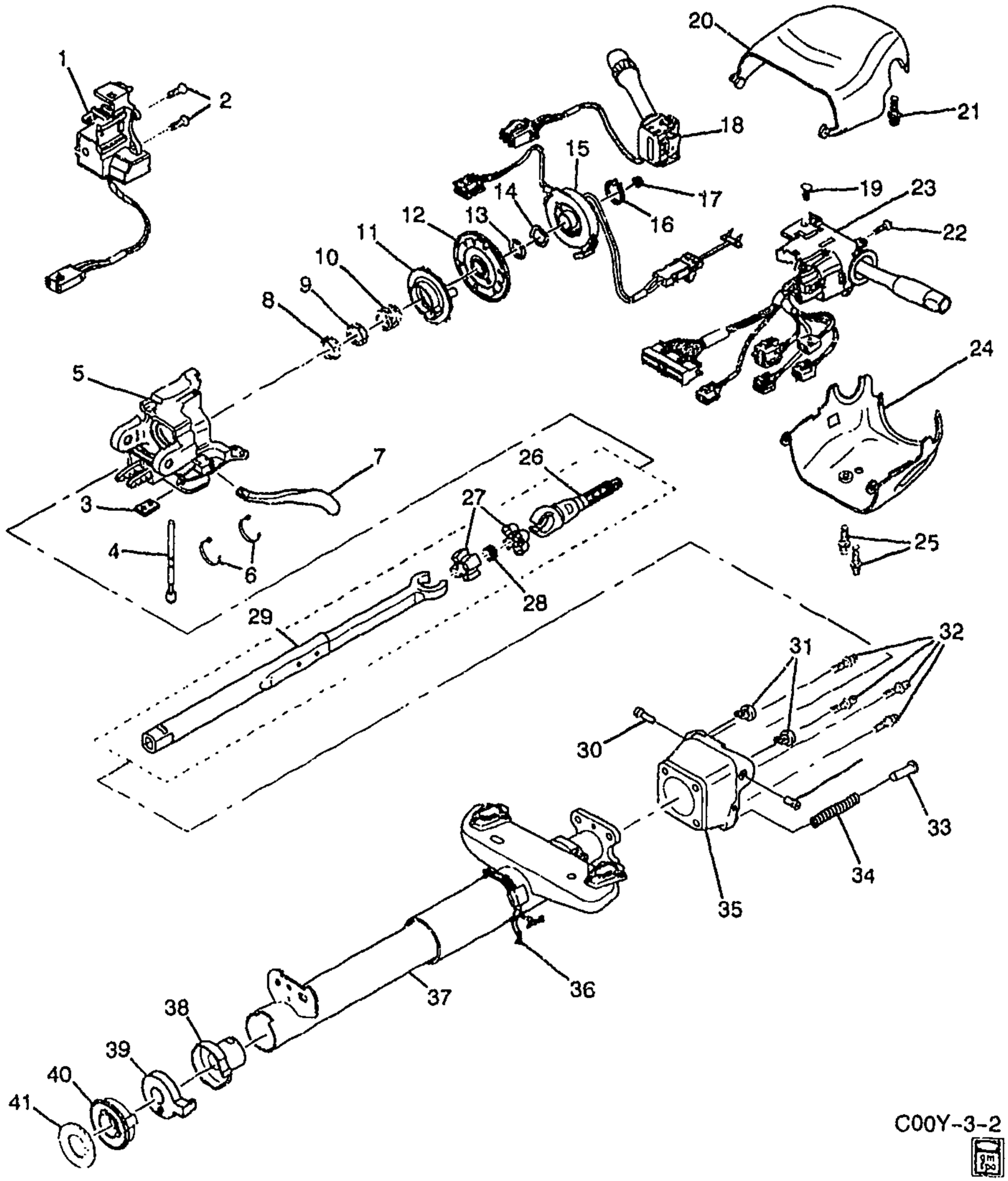

C00Y-3-2

1Y06-027

2000 Y STEERING COLUMN (TILT)

1.	4-M14	2.195	LOCK, STRG WHL THEFT DTRNT	00	Y	1 26050960
2.	4-M14	2.188	BOLT, IGN LK CYL CASE (M5X.8X15) (PAN HD TORX TAP) (6.760)	00	Y	3 26036497
3.	4-N13	2.559	SPACER, DA WRG HARN CDT ..	00	Y07-67 (EXC N37)	1 26061964

© 2001 GENERAL MOTORS SERVICE PARTS OPERATIONS-CHEVROLET-15Y

cardiagn.com

							1Y06-027
	4-N13	2.559	SPACER, DA WRG HARN CDT	00	Y37	1	26061964
4.		N.S.	PIN, ANTI-ROTATION				
5.	4-A11	6.518	HOUSING, STRG COL (INCLS UPPER BRG)	00	Y	1	26043199
6		8.965	STRAP, ADJ TIE (AC-DELCO #12337820)	00		AR	12337820
7.	4-A10	6.514	LEVER, STRG COL TILT WHL REL	00	Y	1	10271070
8.		N.S.	RACE, STRG COL INR (*KIT2)				
9.	4-A12	6.521	SEAT, STRG SHF UPR BRG RACE	00	Y	1	26090233
10.	4-A12	6.521	SPRING, STRG SHF UPR BRG	00	Y	1	26055299
11.	4-N14	2.896	CAM, T/SIG SW CANC	00	Y	1	26044739
12.	4-A9	6.500	PLATE, STRG SHF LK	00	Y07-67 (EXC NP7)	1	26090892
	4-A9	6.500	PLATE, STRG SHF LK	00	Y37	1	26090892
	4-A9	6.500	PLATE, STRG SHF LK	00	Y07-67 (NP7) (EXPORT)	1	26090892
13.	4-A9	6.500	RING, STRG SHF LK PLT RET (6.524)	00	Y	1	5694191
14.	4-A12	6.521	SPRING, STRG SHF UPR BRG	00	Y	1	26055299
15.	4-N24	14.865	COIL, STRG WHL INFL RST MDL	00	Y	1	26069710
16.	4-A9	6.500	RING, STRG SHF LK PLT RET (6.524)	00	Y	1	5694191
17.	4-A10	6.515	NUT, STRG WHL (M14X1.5) (HFH TORQ PREV)	00	Y	1	26056108
18.	4-N18	10.163	SWITCH, WSW & WSWA (AC-DELCO #D6363D)	00	Y	1	26047377
	4-N18	10.163	SWITCH, WSW & WSWA (AC-DELCO #D6363D)	00	Y (EXPORT)	1	26047377
19.	4-N13	2.895	BOLT, T/SIG SW (M5X.8X15) (PAN HD TORX TAP) (6.760)	00	Y	4	26036497
20.	4-A11	6.518	COVER, STRG COL UPR TR	00	Y	1	26050879
21.	4-A11	6.518	BOLT, STRG COL UPR CVR (M4.55 TAP X15) (EXT TORX FLG HD) (2.188)	00	Y	1	26036496
22.	4-N13	2.895	BOLT, T/SIG SW (M5X.8X15) (PAN HD TORX TAP) (6.760)	00	Y	4	26036497
23.	4-N14	3.883	SWITCH, HDLP & T/SIG & CRCONT (W/ LVR) (2.485) (AC-DELCO #D1512G)	00	Y	1	26075870
	4-N5	2.485	SWITCH, HDLP & T/SIG & CRCONT (W/ LVR) (AC-DELCO #D1512G)	00	Y	1	26075870
24.	4-A11	6.518	COVER, STRG COL LWR TR	00	Y	1	26050878
25.	4-A11	6.518	BOLT, STRG COL LWR TR CVR (M5X.8X15) (PAN HD TORX TAP) (6.760)	00	Y	4	26036497
26.	4-A13	6.524	SHAFT, UPR STRG	00	Y (NP7)	1	26073574
	4-A13	6.524	SHAFT, UPR STRG (6.500)	00	Y07-67 (EXC NP7)	1	26064247
27.		N.S.	SPHERE, STRG SHF (*KIT1)				
28.		N.S.	SPRING, JT PRELOAD (*KIT1)				
29.	4-A13	6.524	SHAFT, LWR STRG	00	Y07-67 (N37)	1	26061696
	4-A13	6.524	SHAFT, LWR STRG	00	Y (EXC NP7, N37)	1	26071859
30.	4-A10	6.514	PIN, STRG COL PIV	00	Y	2	26036521
31.	4-A11	6.518	BUMPER, STRG COL HSG (NATURAL) (7.2MM HEIGHT)	00	Y	1	26035863
	4-A11	6.518	BUMPER, STRG COL HSG	00	Y07-67 (N37)	1	26066598

cardiagn.com

							1Y06-027
	4-A11	6.518	BUMPER, STRG COL HSG (PINK) (4.3MM HEIGHT)	00	Y07-67 (EXC N37)	1	26036090
	4-A11	6.518	BUMPER, STRG COL HSG (PINK) (4.3MM HEIGHT)	00	Y37	1	26036090
32.	4-A10	6.514	BOLT, STRG COL HSG SUPT (M8X1.25X16) (TORX HD)	00	Y07-67 (N37)	4	26003095
	4-A10	6.514	BOLT, STRG COL HSG SUPT (EXTERNAL TORX HD, M8 X 1.25-6G (22) THD X 20, 7MM) ...	00	Y07-67 (EXC N37)	4	26085842
	4-A10	6.514	BOLT, STRG COL HSG SUPT (EXTERNAL TORX HD, M8 X 1.25-6G (22) THD X 20, 7MM) ...	00	Y37	4	26085842
33.	4-A10	6.514	GUIDE, STRG COL SPR	00	Y	1	26034561
34.	4-A12	6.521	SPRING, STRG COL TILT	00	Y	1	26078240
35.	4-A11	6.518	SUPPORT, STRG COL HSG (CODE SSW, SSY, SSZ, STA, STC, STF, STH, STJ,)	00	Y07-67 (EXC N37)	1	26036309
	4-A11	6.518	SUPPORT, STRG COL HSG	00	Y07-67 (N37)	1	26068561
	4-A11	6.518	SUPPORT, STRG COL HSG (CODE SSW, SSY, SSZ, STA, STC, STF, STH, STJ,)	00	Y37	1	26036309
36.		N.S.	STRAP, WRG HARN		.....		
37.	4-A11	6.518	JACKET, STRG COL	00	Y07-67 (EXC N37)	1	26050872
	4-[illegible]	6.518	JACKET, STRG COL	00	Y (N37)	1	26061677
	[illegible]	6.518	JACKET, STRG COL	00	Y37	1	26050872
38.	4-A12	6.521	BEARING, STRG SHF LWR (W/ADAPTER)	00	Y	1	26077389
39.	4-A13	6.522	SENSOR, STRG WHL POSN	00	Y	1	26058286
40.	4-A12	6.521	RETAINER, STRG SHF LWR BRG (6.522)	00	Y	1	26050877
41.		N.S.	SEAL, STRG SHF		.....		

SERVICE KITS

1.	4-A13	6.525	SPHERE KIT, STRG SHF (INCLS 27, 28) (INCLS SPR JOINT PRELOAD)	00	Y	1	26057095
	4-A13	6.525	SPHERE KIT, STRG SHF (INCLS 27, 28)	00	Y	1	26066321
2.	4-A12	6.521	BEARING KIT, STRG SHF UPR (INCLS 8) (W/RACE)	00	Y	2	26001827

RPO DEFINITIONS
NP7 - STEERING COLUMN(EXPORT)
N37 - STEERING COLUMN,TILT AND TELESCOPING

cardiagn.com

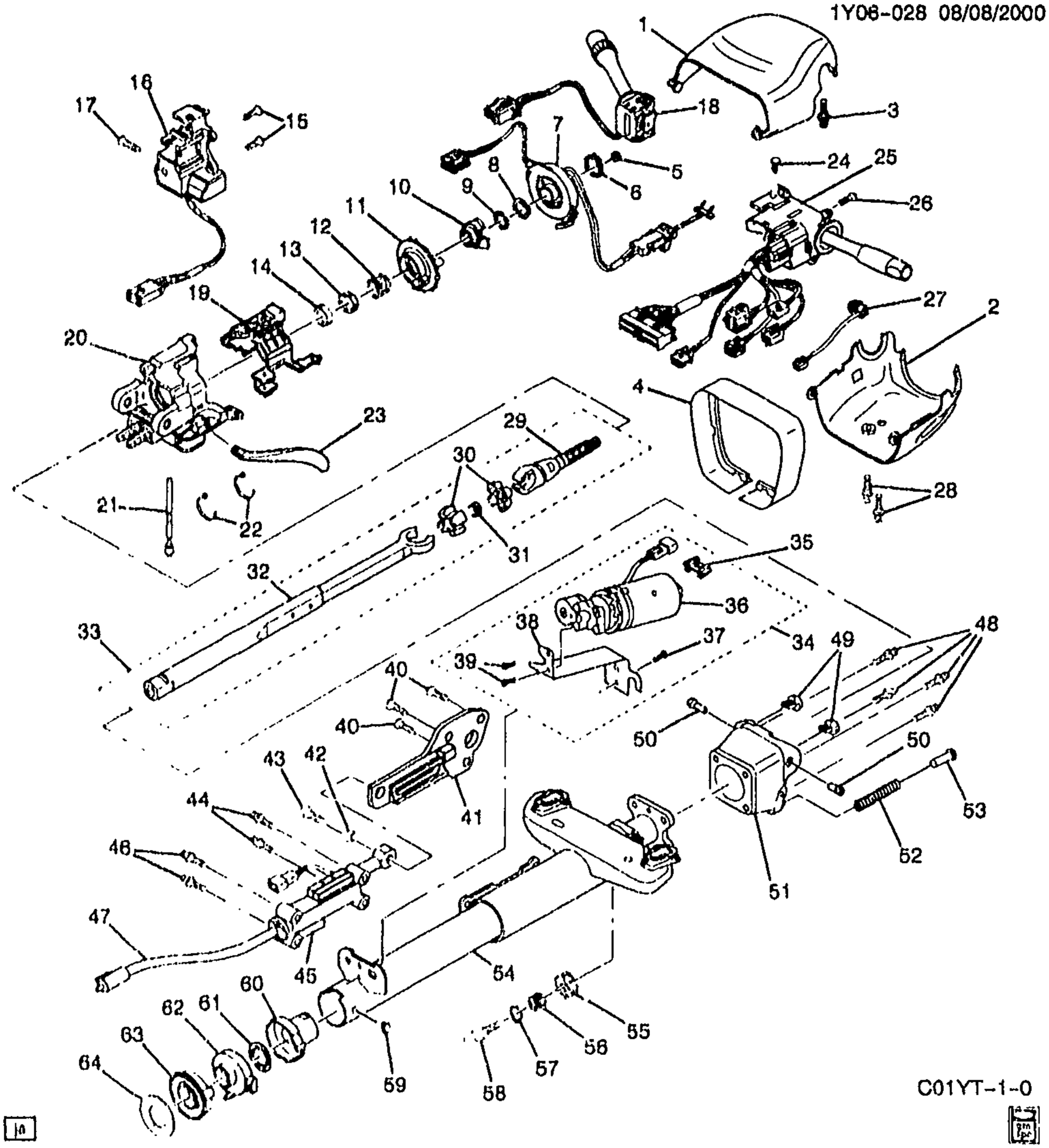

C01YT-1-0

1Y06-028

2001-2002 Y STEERING COLUMN (POWER TELESCOPE TILT)(N37)

1	4-A11	6.518	COVER, STRG COL UPR TR	01-02	Y	1	26050879
2.	4-A11	6.518	COVER, STRG COL LWR TR	01-02	Y	1	26050878
3.	4-A11	6.518	BOLT, STRG COL UPR CVR (M4.55 TAP X15) (EXT TORX FLG HD) (2.188)	01-02	Y	1	26036496
4.	4-A11	6.518	SHROUD, STRG COL	01-02	Y07-67 (N37)	1	26064446

cardiagn.com

							1Y06-028
5.	4-A10	6.515	NUT, STRG WHL (M14X1.5) (HFH TORQ PREV)	01-02	Y	1	26056108
6.		8.934	RING, SNAP (STL PL .750 DIA) (STRG WHL INFL RST MDL COIL RET)	01-02		AR	274414
7.	4-N24	14.865	COIL, STRG WHL INFL RST MDL	01	Y	1	26069710
	4-N24	14.865	COIL, STRG WHL INFL RST MDL	02	Y	1	26095710
8.	4-N24	14.865	WASHER, STRG WHL INFL RST MDL COIL	01-02	Y	1	26011609
9.		N.S.	RACE, STRG COL INR				
10.	4-A9	6.500	PLATE, STRG SHF LK	01-02	Y07-67 (EXC NP7)	1	26090892
11.	4-N14	2.896	CAM, T/SIG SW CANC	01-02	Y	1	26044739
12.	4-A12	6.521	SPRING, STRG SHF UPR BRG	01-02	Y	1	26055299
13.	4-A12	6.521	SEAT, STRG SHF UPR BRG RACE	01-02	Y	1	26090233
14.	4-A9	6.500	RING, STRG SHF LK PLT RET (*KIT1) (6.524)	01-02	Y	1	5694191
15.	4-M14	2.188	BOLT, IGN LK CYL CASE (M5X.8X15) (PAN HD TORX TAP) (6.760)	01-02	Y	3	26036497
16.	4-M14	2.195	LOCK, STRG WHL THEFT DTRNT	01-02	Y	1	26050960
17.	4-M14	2.188	BOLT, IGN LK CYL CASE (M5X.8X15) (PAN HD TORX TAP) (6.760)	01-02	Y	3	26036497
18.	4-N18	10.163	SWITCH, WSW & WSWA (AC-DELCO #D6363D)	01-02	Y	1	26047377
	4-N18	10.163	SWITCH, WSW & WSWA (AC-DELCO #D6363D)	01-02	Y (EXPORT)	1	26047377
19.	4-N18	10.163	BRACKET, WSW & WSWA SW (2.895)	01-02	YY07-67 (M30) (EXC NP7)	1	26052963
20.	4-A11	6.518	HOUSING, STRG COL (INCLS UPPER BRG)	01-02	Y	1	26043199
21.		N.S.	PIN, ANTI-ROTATION				
22.		N.S.	STRAP, WRG HARN				
23.	4-A10	6.514	LEVER, STRG COL TILT WHL REL	01-02	Y	1	10271070
24.	4-N13	2.895	BOLT, T/SIG SW (M5X.8X15) (PAN HD TORX TAP) (6.760)	01-02	Y	4	26036497
25.	4-N14	3.883	SWITCH, HDLP & T/SIG & CRCONT (W/ LVR) (2.485) (AC-DELCO #D1512G)	01-02	Y	1	26075870
	4-N5	2.485	SWITCH, HDLP & T/SIG & CRCONT (W/ LVR) (AC-DELCO #D1512G)	01-02	Y	1	26075870
26.	4-N13	2.895	BOLT, T/SIG SW (M5X.8X15) (PAN HD TORX TAP) (6.760)	01-02	Y	4	26036497
27.	4-A10	6.514	SWITCH, STRG COL TLSCP	01-02	Y (N37)	1	26061700
28.	4-A11	6.518	BOLT, STRG COL LWR TR CVR (M5X.8X15) (PAN HD TORX TAP) (6.760)	01-02	Y	4	26036497
	4-A11	6.518	BOLT, STRG COL LWR TR CVR (M5X.8X11.5) (6.522)	01-02	YY07-67 (M30) (EXC NP7)	1	26014529
29.	4-A13	6.524	SHAFT, UPR STRG (6.500)	01-02	Y07-67 (EXC NP7)	1	26064247
30.		N.S.	CENTERING SPHERE (*KIT2)				
31.		N.S.	JOINT PRELOAD SPRING (*KIT2)				

cardiagn.com

							1Y06–028
32.		N.S.	SHAFT, LWR STRG (PART OF 33)		.....		
33.	4–A13	6.524	SHAFT, LWR STRG (INCLS 32) ..	01–02	Y07–67 (N37)	1	26061696
34.		N.S.	BOLT, STRG COL LWR TR CVR (COMPONENT PARTS SERVICED)		.....		
35.	4–A13	6.522	RETAINER, STRG COL TLSCP ACTR MOT WRG HARN CONN (6.514)	01–02	Y (N37)	1	26067485
	4–A13	6.522	RETAINER, STRG COL TLSCP ACTR MOT WRG HARN CONN (6.514)	02	YY07–67 (MM6, M30, N37)	1	26067485
36.	4–A10	6.514	MOTOR, STRG COL TLSCP ACTR	01–02	Y (N37)	1	26061693
37.		8.900	SCREW ASM, MACH HEX HD DOG PNT (WSW SYS MDL)	01–02	.....	AR	11516570
38.	4–A12	6.521	BRACKET, STRG COL TLSCP ACTR (6.514)	01–02	Y (N37)	1	26061694
39.	4–A10	6.514	BOLT, STRG COL TLSCP ACTR (M5X.8X15) (PAN HD TORX TAP) (6.760)	01–02	Y (N37)	3	26036497
	4–A10	6.514	BOLT, STRG COL TLSCP ACTR (M6X1.0X28.25) (PAN HD TORX TAP) (6.521)	01–02	Y (N37)	4	26052098
	4–A10	6.514	BOLT, STRG COL TLSCP ACTR ..	01–02	Y (N37)	2	26061695
40.	4–N14	4.010	BOLT, TRANS CONT LVR BOWL PLT (GRAY) (M6X1.0X14.0)	01–02	Y07–67 (MM6, N37) ...	3	26020231
	4–N14	4.010	BOLT, TRANS CONT LVR BOWL PLT (GRAY) (M6X1.0X14.0)	01–02	Y07 67 (M30, N37) ...	3	26020231
41.	4–A10	6.514	ADAPTER, STRG COL TLSCP ACTR (INCLS 42, 43)	01–02	Y (N37)	1	26052086
	4–A10	6.514	ADAPTER, STRG COL TLSCP ACTR (INCLS 42, 43)	01–02	Y (N37)	1	26061674
	4–A10	6.514	ADAPTER, STRG COL TLSCP ACTR (INCLS 42, 43)	01–02	Y (N37)	1	26061675
	4–A10	6.514	ADAPTER, STRG COL TLSCP ACTR (BOLT/SCREW) (INCLS 42, 43)	01–02	Y (N37)	1	26052087
42.		N.S.	BALL, TLSCP DRIVE) (PART OF 41		.....		
43.		N.S.	BOLT, TLSCP DRIVE) (PART OF 41		.....		
44.	4–A10	6.514	BOLT, STRG COL TLSCP ACTR (M5X.8X15) (PAN HD TORX TAP) (6.760)	01–02	Y (N37)	3	26036497
	4–A10	6.514	BOLT, STRG COL TLSCP ACTR (M6X1.0X28.25) (PAN HD TORX TAP) (6.521)	01–02	Y (N37)	4	26052098
	4–A10	6.514	BOLT, STRG COL TLSCP ACTR ..	01–02	Y (N37)	2	26061695
45.	4–A12	6.521	ACTUATOR, STRG COL TLSCP (6.514)	01–02	Y (N37)	1	26061673
46.	4–A10	6.514	BOLT, STRG COL TLSCP ACTR (M5X.8X15) (PAN HD TORX TAP) (6.760)	01–02	Y (N37)	3	26036497
	4–A10	6.514	BOLT, STRG COL TLSCP ACTR (M6X1.0X28.25) (PAN HD TORX TAP) (6.521)	01–02	Y (N37)	4	26052098
	4–A10	6.514	BOLT, STRG COL TLSCP ACTR ..	01–02	Y (N37)	2	26061695

cardiagn.com

						1Y06-028	
47.	4-A12	6.521	CABLE, STRG COL TLSCP ACTR (6.514)	01-02	Y (N37)	1	26061676
48.	4-A10	6.514	BOLT, STRG COL HSG SUPT (M8X1.25X16) (TORX HD)	01-02	Y07-67 (N37)	4	26003095
49.	4-A11	6.518	BUMPER, STRG COL HSG (NATURAL) (7.2MM HEIGHT)	01-02	Y	1	26035863
	4-A11	6.518	BUMPER, STRG COL HSG	01-02	Y07-67 (N37)	1	26066598
50.	4-A10	6.514	PIN, STRG COL PIV	01-02	Y	2	26036521
51.	4-A11	6.518	SUPPORT, STRG COL HSG	01-02	Y07-67 (N37)	1	26068561
52.	4-A12	6.521	SPRING, STRG COL TILT	01-02	Y	1	26078240
53.	4-A10	6.514	GUIDE, STRG COL SPR	01-02	Y	1	26034561
54.	4-A11	6.518	JACKET, STRG COL (INCLS 58)	01-02	Y (N37)	1	26061677
55.	4-A11	6.518	GUIDE, STRG COL HSG SUPT	01-02	Y (N37)	1	26052095
56.	4-A11	6.518	SPRING, STRG COL HSG SUPT GDE	01-02	Y (N37)	1	26052103
57.	4-A11	6.518	RING, STRG COL HSG SUPT GDE SPR RET	01-02	Y (N37)	1	26052097
58.		N.S.	PIN, STRG COL HSG SUPT GDE (PART OF 54)				
59.	4-A11	6.518	PLUG, STRG COL JKT HOLE	01-02	Y07-67 (N37)	1	7840594
60.	4-A12	6.521	BEARING, STRG SHF LWR (W/ADAPTER)	01-02	Y	1	26077389
61.	4-A12	6.521	RETAINER, STRG SHF LWR BRG SPR	01-02	Y (N37)	2	7847029
62.	4-A13	6.522	SENSOR, STRG WHL POSN	01-02	Y	1	26059047
63.	4-A12	6.521	RETAINER, STRG SHF LWR BRG (6.522)	01-02	Y	1	26050877
64.	4-A13	6.525	SEAL, STRG SHF	01-02	Y	1	26056695

SERVICE KITS

1.	4-A12	6.521	BEARING KIT, STRG SHF UPR (INCLS 14) (W/RACE)	01-02	Y	2	26001827
2.	4-A13	6.525	SPHERE KIT, STRG SHF (INCLS 30, 31) (INCLS SPR JOINT PRELOAD)	01-02	Y	1	26057095
	4-A13	6.525	SPHERE KIT, STRG SHF (INCLS 30, 31)	02	Y	1	26066321

RPO DEFINITIONS
MM6 – TRANSMISSION MAN 6 SPD, BORG WARNER, 85MM, 1ST 2.66, 6TH 0.50, O/D
M30 – TRANSMISSION,AUTOMATIC 4 SPEED,4L60E,ELECTRONIC
NP7 – STEERING COLUMN(EXPORT)
N37 – STEERING COLUMN,TILT AND TELESCOPING

cardiagn.com

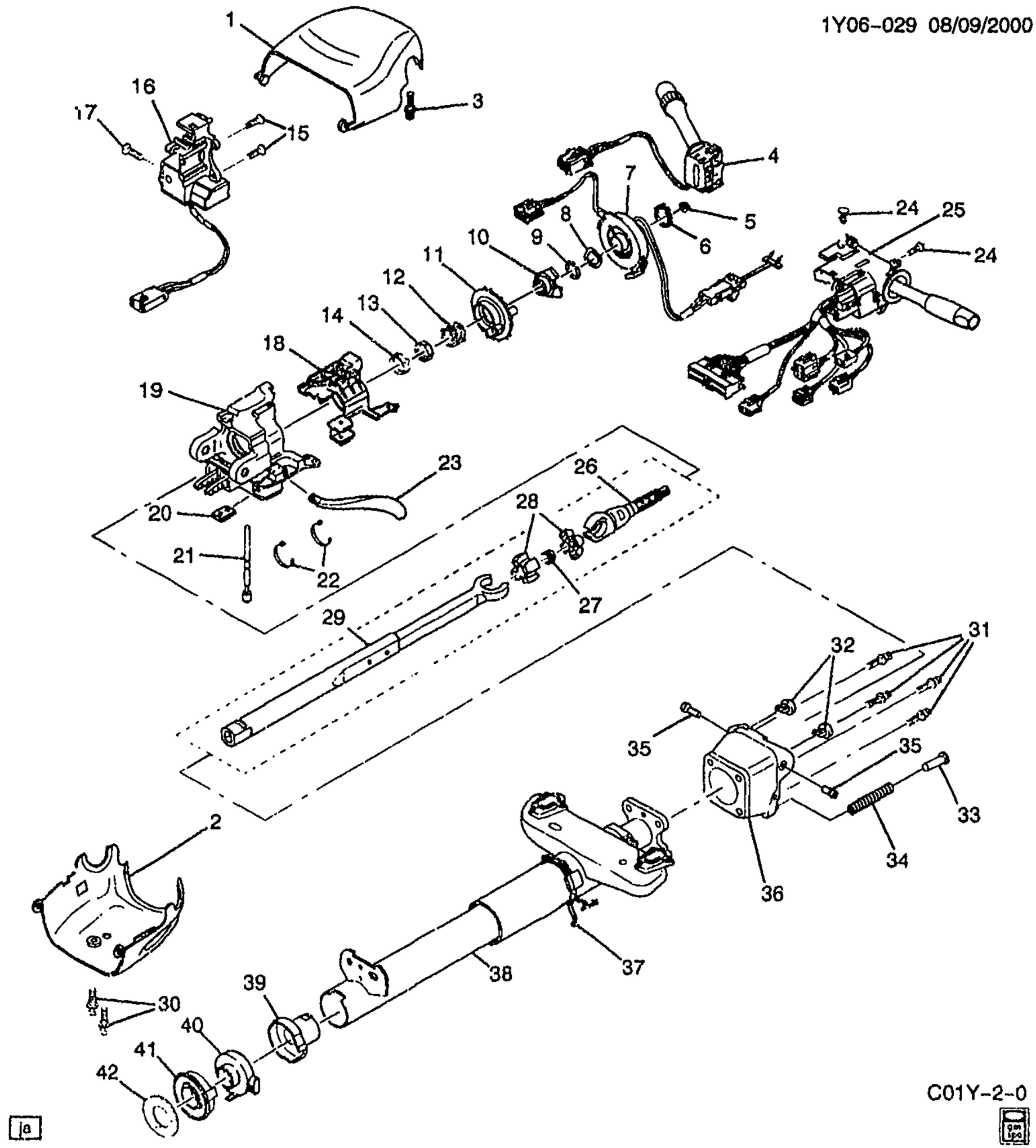

2001-2002 Y STEERING COLUMN (TILT)

1.	4-A11	6.518	COVER, STRG COL UPR TR	01-02	Y	1	26050879
2.	4-A11	6.518	COVER, STRG COL LWR TR	01-02	Y	1	26050878
3.	4-A11	6.518	BOLT, STRG COL UPR CVR (M4.55 TAP X15) (EXT TORX FLG HD) (2.188)	01-02	Y	1	26036496

© 2001 GENERAL MOTORS SERVICE PARTS OPERATIONS - CHEVROLET - 15Y

cardiagn.com

							1Y06-029
4.	4-N18	10.163	SWITCH, WSW & WSWA (AC-DELCO #D6363D)	01-02	Y	1	26047377
	4-N18	10.163	SWITCH, WSW & WSWA (AC-DELCO #D6363D)	01-02	Y (EXPORT)	1	26047377
5.	4-A10	6.515	NUT, STRG WHL (M14X1.5) (HFH TORQ PREV)	01-02	Y	1	26056108
6.	4-A9	6.500	RING, STRG SHF LK PLT RET (6.524)	01-02	Y	1	5694191
7.	4-N24	14.865	COIL, STRG WHL INFL RST MDL	01	Y	1	26069710
	4-N24	14.865	COIL, STRG WHL INFL RST MDL	02	Y	1	26095710
8.	4-A12	6.521	SPRING, STRG SHF UPR BRG	01-02	Y	1	26055299
9.	4-A9	6.500	RING, STRG SHF LK PLT RET (6.524)	01-02	Y	1	5694191
10.	4-A9	6.500	PLATE, STRG SHF LK	01-02	Y07-67 (EXC NP7)	1	26090892
	4-A9	6.500	PLATE, STRG SHF LK	01-02	Y37	1	26090892
	4-A9	6.500	PLATE, STRG SHF LK	01	Y07-67 (NP7) (EXPORT)	1	26090892
11.	4-N14	2.896	CAM, T/SIG SW CANC	01-02	Y	1	26044739
12.	4-A12	6.521	SPRING, STRG SHF UPR BRG	01-02	Y	1	26055299
13.	4-A12	6.521	SEAT, STRG SHF UPR BRG RACE	01-02	Y	1	26090233
14.		N.S.	RACE, STRG COL INR (*KIT2)				
15.	4-M14	2.188	BOLT, IGN LK CYL CASE (M5X.8X15) (PAN HD TORX TAP) (6.760)	01-02	Y	3	26036497
16.	4-M14	2.195	LOCK, STRG WHL THEFT DTRNT	01-02	Y	1	26050960
17.	4-M14	2.188	BOLT, IGN LK CYL CASE (M5X.8X15) (PAN HD TORX TAP) (6.760)	01-02	Y	3	26036497
18.	4-N18	10.163	BRACKET, WSW & WSWA SW (2.895)	01-02	YY07-67 (M30) (EXC NP7)	1	26052963
19.	4-A11	6.518	HOUSING, STRG COL (INCLS UPPER BRG)	01-02	Y	1	26043199
20.	4-N13	2.559	SPACER, DA WRG HARN CDT	01-02	Y07-67 (EXC N37)	1	26061964
	4-N13	2.559	SPACER, DA WRG HARN CDT	01-02	Y37	1	26061964
21.		N.S.	PIN, ANTI-ROTATION				
22.		8.965	STRAP, ADJ TIE (AC-DELCO #12337820)	01-02		AR	12337820
23.	4-A10	6.514	LEVER, STRG COL TILT WHL REL	01-02	Y	1	10271070
24.	4-N13	2.895	BOLT, T/SIG SW (M5X.8X15) (PAN HD TORX TAP) (6.760)	01-02	Y	4	26036497
25.	4-N14	3.883	SWITCH, HDLP & T/SIG & CRCONT (W/ LVR) (2.485) (AC-DELCO #D1512G)	01-02	Y	1	26075870
	4-N5	2.485	SWITCH, HDLP & T/SIG & CRCONT (W/ LVR) (AC-DELCO #D1512G)	01-02	Y	1	26075870
26.	4-A13	6.524	SHAFT, UPR STRG	01-02	Y (NP7)	1	26073574
	4-A13	6.524	SHAFT, UPR STRG (6.500)	01-02	Y07-67 (EXC NP7)	1	26064247
	4-A13	6.524	SHAFT, UPR STRG (6.500)	01-02	Y37	1	26064247
27.		N.S.	SPHERE, STRG SHF (*KIT1)				
28.		N.S.	SPRING, JT PRELOAD (*KIT1)				
29.	4-A13	6.524	SHAFT, LWR STRG	01-02	Y07-67 (N37)	1	26061696
	4-A13	6.524	SHAFT, LWR STRG	01-02	Y (EXC NP7, N37)	1	26071859

cardiagn.com

							1Y06-029
30.	4-A11	6.518	BOLT, STRG COL LWR TR CVR (M5X.8X15) (PAN HD TORX TAP) (6.760)	01-02	Y	4	26036497
	4-A11	6.518	BOLT, STRG COL LWR TR CVR (M5X.8X11.5) (6.522)	01-02	YY07-67 (M30) (EXC NP7)	1	26014529
	4-A11	6.518	BOLT, STRG COL LWR TR CVR (M5X.8X11.5) (6.522)	01-02	YY37 (M12) (EXC NP7)	1	26014529
31.	4-A10	6.514	BOLT, STRG COL HSG SUPT (M8X1.25X16) (TORX HD)	01-02	Y07-67 (N37)	4	26003095
	4-A10	6.514	BOLT, STRG COL HSG SUPT (EXTERNAL TORX HD, M8 X 1.25-6G (22) THD X 20, 7MM)	01	Y07-67 (EXC N37)	4	26085842
	4-A10	6.514	BOLT, STRG COL HSG SUPT (EXTERNAL TORX HD, M8 X 1.25-6G (22) THD X 20, 7MM)	01	Y37	4	26085842
32.	4-A11	6.518	BUMPER, STRG COL HSG (NATURAL) (7.2MM HEIGHT)	01-02	Y	1	26035863
	4-A11	6.518	BUMPER, STRG COL HSG	01-02	Y07-67 (N37)	1	26066598
	4-A11	6.518	BUMPER, STRG COL HSG (PINK) (4.3MM HEIGHT)	01-02	Y07-67 (EXC N37)	1	26036090
	4-A11	6.518	BUMPER, STRG COL HSG (PINK) (4.3MM HEIGHT)	01-02	Y37	1	26036090
33.	4-A10	6.514	GUIDE, STRG COL SPR	01-02	Y	1	26034561
34.	4-A12	6.521	SPRING, STRG COL TILT	01-02	Y	1	26078240
35.	4-A10	6.514	PIN, STRG COL PIV	01-02	Y	2	26036521
36.	4-A11	6.518	SUPPORT, STRG COL HSG (CODE SSW, SSY, SSZ, STA, STC, STF, STH, STJ,)	01-02	Y07-67 (EXC N37)	1	26036309
	4-A11	6.518	SUPPORT, STRG COL HSG	01-02	Y07-67 (N37)	1	26068561
	4-A11	6.518	SUPPORT, STRG COL HSG (CODE SSW, SSY, SSZ, STA, STC, STF, STH, STJ,)	01-02	Y37	1	26036309
37.		N.S.	STRAP, WRG HARN				
38.	4-A11	6.518	JACKET, STRG COL	01-02	Y07-67 (EXC N37)	1	26050872
	4-A11	6.518	JACKET, STRG COL	01-02	Y (N37)	1	26061677
	4-A11	6.518	JACKET, STRG COL	01-02	Y37	1	26050872
39.	4-A12	6.521	BEARING, STRG SHF LWR (W/ADAPTER)	01-02	Y	1	26077389
40.	4-A13	6.522	SENSOR, STRG WHL POSN	01-02	Y	1	26059047
41.	4-A12	6.521	RETAINER, STRG SHF LWR BRG (6.522)	01-02	Y	1	26050877
42.		N.S.	SEAL, STRG SHF				

SERVICE KITS

1.	4-A13	6.525	SPHERE KIT, STRG SHF (INCLS 27, 28) (INCLS SPR JOINT PRELOAD)	01-02	Y	1	26057095
	4-A13	6.525	SPHERE KIT, STRG SHF (INCLS 27, 28)	02	Y	1	26066321
2.	4-A12	6.521	BEARING KIT, STRG SHF UPR (INCLS 14) (W/RACE)	01-02	Y	2	26001827

RPO DEFINITIONS
M12 - TRANSMISSION MAN 6 SPD, TREMEC, 85MM, 1ST 2.97, 6TH 0.57, O/D
M30 - TRANSMISSION,AUTOMATIC 4 SPEED,4L60E,ELECTRONIC
NP7 - STEERING COLUMN(EXPORT)
N37 - STEERING COLUMN,TILT AND TELESCOPING

cardiagn.com

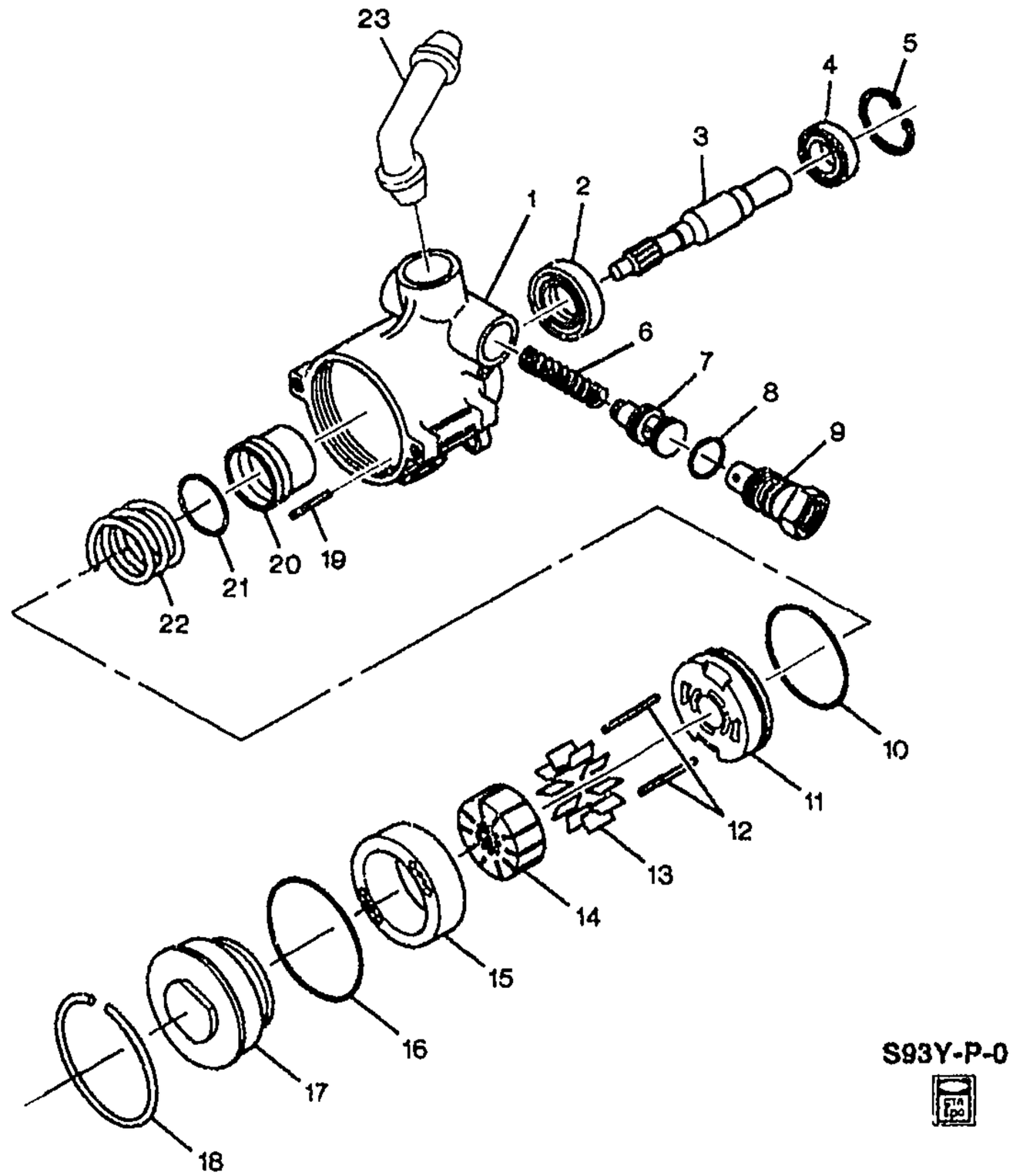

1Y06-024

1997-2002 Y STEERING PUMP ASM

1.		N.S.	HOUSING, P/S PUMP (*KIT1) ...		.....		
2.	4-A15	6.617	SEAL, P/S PUMP SHF (*KIT1) ...	97-02	Y	1	26033537
3.	4-A15	6.614	SHAFT, P/S PUMP (INCLS 4) (*KIT1)	97-02	Y	1	26045548
4.	4-A15	6.616	BEARING, P/S PUMP SHF (PART OF 3) (*KIT1)	97-02	Y	1	26001378
5.	4-A15	6.616	RING, P/S PUMP SHF BRG RET (*KIT1)	97-02	Y	1	7842662
6.	4-A15	6.624	SPRING, P/S PUMP FLOW C/VLV (*KIT1) (6.612)	97-02	Y	1	5688037
7.		N.S.	VALVE, P/S PUMP FLOW CONT (*KIT1)		....		
8.	4-A15	6.635	SEAL, P/S PUMP RSVR (O RING) (14.5 I.D.) (*KIT1)	97-02	Y	1	26020642
9.	4-A15	6.624	FITTING, P/S PUMP (*KIT1)	97-02	Y	1	26056501
10.		N.S.	SEAL, O-RING (*KIT1)		.....		

cardiagn.com

							1Y06-024
11.	4-A15	6.612	PLATE, P/S PUMP PRESS (*KIT1)	97-02	Y	1	26002915
12.	4-A14	6.608	PIN, P/S PUMP THR PLT (*KIT1)	97-02	Y	1	7839991
13.		N.S.	VANE KIT, P/S PUMP (*KIT1)				
14.		N.S.	ROTOR, PUMP (*KIT1)				
15.		N.S.	RING, PUMP (*KIT1)				
16.		N.S.	RING, O-RING (*KIT1)				
17.		N.S.	PLATE, P/S PUMP THR (PART OF PUMP ONLY) (*KIT1)				
18.	4-A15	6.612	RING, P/S PUMP THR PLT RET (*KIT1)	97-02	Y	1	7839992
19.	4-A14	6.608	PIN, P/S PUMP PRESS PLT (*KIT1)	97-02	Y	1	7839990
20.		N.S.	SLEEVE, P/S PUMP PRESS PLT SEAL (*KIT1)				
21.		N.S.	SEAL, O-RING (*KIT1)				
22.	4-A15	6.612	SPRING, P/S PUMP PRESS PLT (*KIT1)	97-02	Y	1	7839989
23.	4-A15	6.671	TUBE, P/S PUMP INL (*KIT1)	97-02	Y	1	26006074

SERVICE KITS

1.	4-A14	6.605	PUMP, P/S (INCLS 1-23)	97-02	Y	1	26046503

cardiagn.com

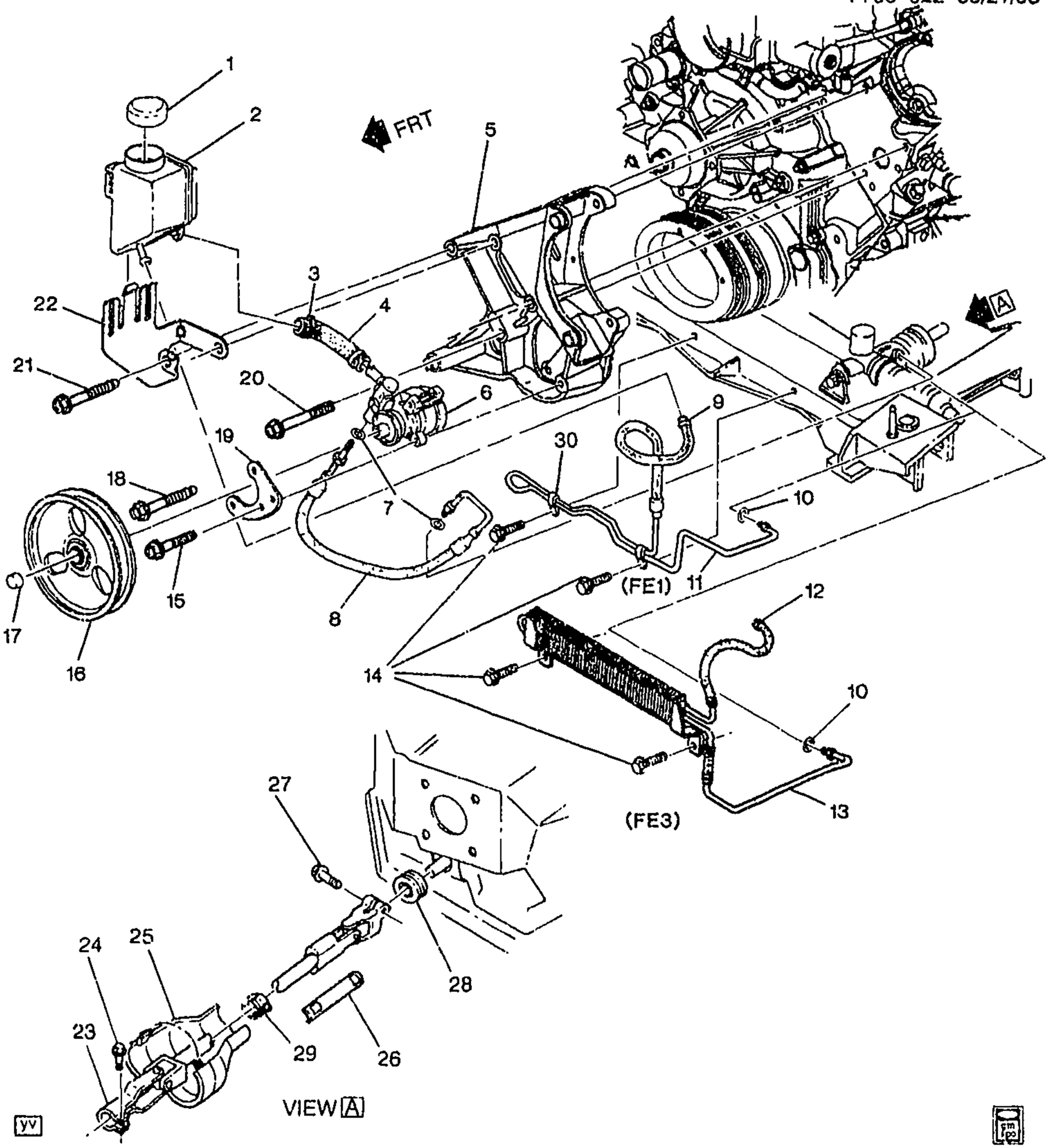

1Y06-022

1997 Y STEERING PUMP MOUNTING & RELATED PARTS

1.	4-A15	6.635	CAP, P/S FLUID RSVR (PART OF 2) (AC-DELCO #36-7140)	97 Y	1	26022453
2.	4-A15	6.635	RESERVOIR, P/S FLUID (INCLS 1)	97 Y	1	26046502
3.	4-A16	6.672	CLAMP, P/S FLUID RSVR HOSE (AT P/S PUMP) (PART OF 4)	97 Y	2	26028657

cardiagn.com

							1Y06-022
4.	4-A15	6.671	HOSE, P/S FLUID RSVR INL (INCLS 3)	97	Y	1	26046910
5.	4-M14	2.277	BRACKET, GEN & P/S PUMP	97	Y	1	12555220
	4-A14	6.606	BRACKET, GEN & P/S PUMP (2.277)	97	Y	1	12555220
6.	4-A14	6.605	PUMP, P/S	97	Y	1	26046503
7.	4-A16	6.674	SEAL, P/S GR INL HOSE (O RING) (PART OF 8) (7.65MM IDX1.63MM THK)	97	Y	2	26001594
8.	4-A15	6.670	HOSE, P/S GR INL (INCLS 7)	97	Y	1	26046501
9.	4-A14	6.602	CLAMP, P/S FLUID CLG HOSE (PART OF 11) (WORM GEAR, 1/2-13/16) (8.948)	97	Y (FE1)	1	22527587
10.	4-A14	6.602	SEAL, P/S FLUID CLG PIPE (O RING) (PART OF 11, 13) (7.65MM IDX1.63MM THK) (6.674)	97	Y	1	26001594
11.	4-A14	6.600	COOLER, P/S FLUID (INCLS 9, 10)	97	Y (FE1)	1	26047343
	4-A14	6.602	SEAL, P/S FLUID CLG PIPE (O RING) (7.65MM IDX1.63MM THK) (6.674)	97	Y	1	26001594
	4-A14	6.602	CLAMP, P/S FLUID CLG HOSE (WORM GEAR, 1/2-13/16) (8.948)	97	Y (FE1)	1	22527587
12.		N.S.	CLAMP, P/S FLUID CLG HOSE (PART OF 13)				
13.	4-A14	6.600	COOLER, P/S FLUID (INCLS 10, 12)	97	Y (FE3)	1	26088760
14.	4-A14	6.602	BOLT, P/S FLUID CLR (M6X1X25, 23, 17 OD) (8.900)	97	Y	4	11516413
15.		8.900	BOLT, HWH, M8X1.25X40, SPL FULLTHD, AC PT, 10.9 PZOR (P/S PUMP FRT BR)	97		2	11515758
16.	4-A15	6.655	PULLEY, P/S PUMP	97	Y	1	12559890
17.	4-A15	6.655	CAP, P/S PUMP PUL HUB	97	Y	1	10077300
18.	4-A14	6.606	BOLT, P/S PUMP BRKT (M8X1.25X84MM) (3.275)	97	Y	2	14078896
19.	4-A14	6.606	BRACE, P/S PUMP FRT	97	Y (LS1)	1	12535693
20.		8.900	BOLT, HFH, M10X1.5X70, 30 THD, 22.3 OD, 9.8 MAT, 7114M FIN, MACH, REDUCED BODY (GEN BRKT) (POSN #2)	97		1	11516356
21.		8.900	BOLT, HFH, M10X1.5X80, 30 THD, 22.3 OD, 9.8, 7114M (GEN BRKT) (POSN #1)	97		3	11516357
22.	4-A15	6.635	BRACKET, P/S FLUID RSVR	97	Y	1	12555222
23.	4-A13	6.524	SHAFT, S/GR CPLG	97	Y	1	26068266
24.	4-A13	6.525	BOLT, INTER STRG SHF (POSN #2) (10X1.5X40.3)	97	Y	1	7847298
25.	4-A13	6.525	SHIELD, S/GR CPLG	97	Y	1	10285915
26.	4-C9	8.808	LABEL, INFL RST SYS SERV NTC	97	Y (AK5)	1	26017956
27.	4-A13	6.525	BOLT, INTER STRG SHF (POSN #1) (M10X1.5X31) (HFH NYLON LOCK) (6 POINT HEAD)	97	Y	1	26005756
28.	4-A16	6.758	SEAL, STRG COL	97	Y	1	10253854

cardiagn.com

							1Y06-022
29.	4-A9	6.509	CLAMP, S/GR CPLG SHLD (8.948)	97	Y	1	10293740
30.	4-A16	6.672	CLIP, P/S GR OTLT PIPE	97	Y (FE1)	2	26034793

RPO DEFINITIONS
AK5 – RESTRAINT SYSTEM,FRONT SEAT,INFLATABLE,DRIVER AND PASSENGER
FE1 – SUSPENSION SYSTEM,SOFT RIDE
FE3 – SUSPENSION SYSTEM,SPORT
LS1 – ENGINE GAS, 8 CYL, 5.7L, SFI, ALUMINUM ENGINE

cardiagn.com

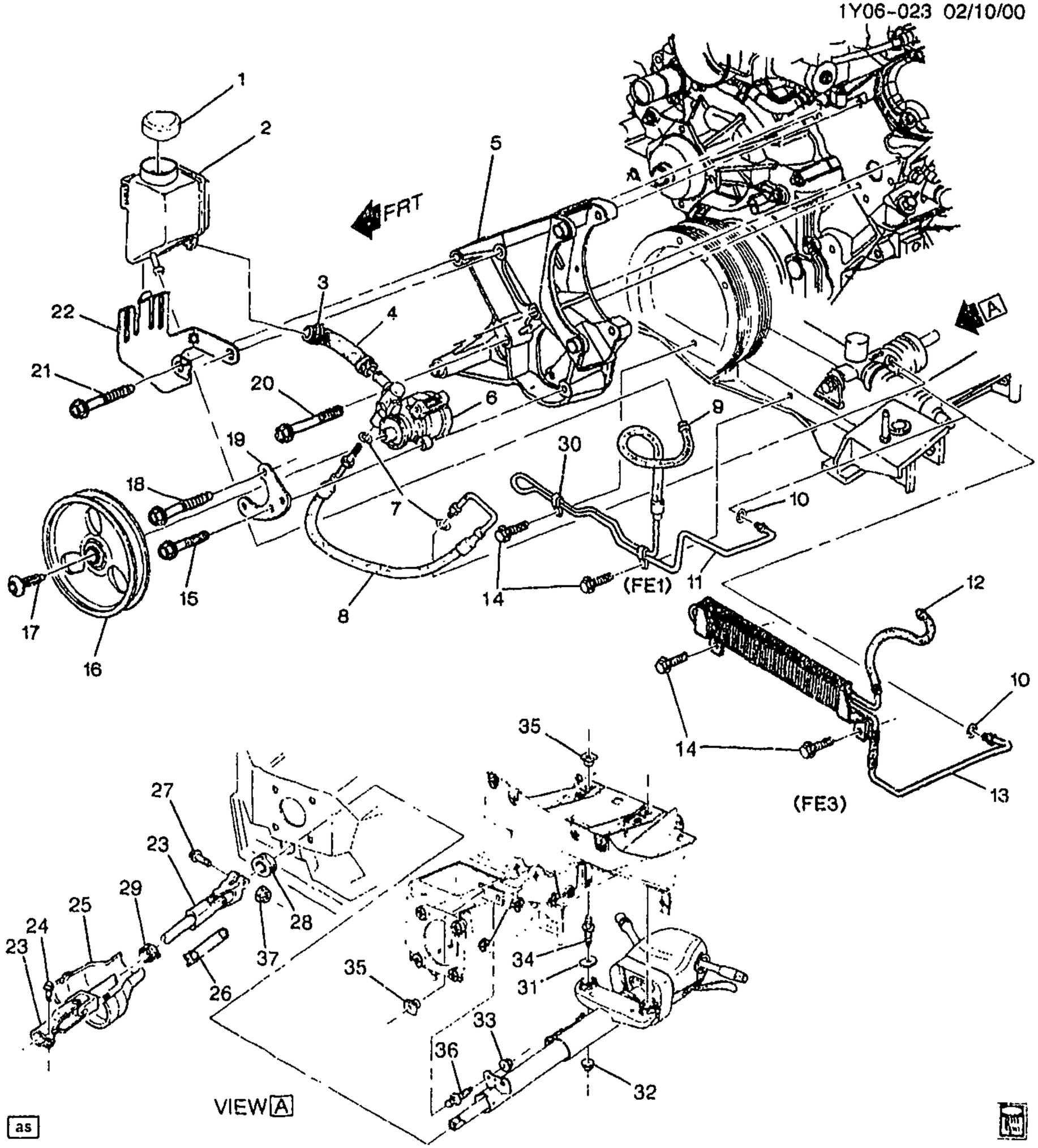

1Y06-023

1998-2002 Y STEERING PUMP MOUNTING & RELATED PARTS

1.	4-A15	6.635	CAP, P/S FLUID RSVR (AC-DELCO #36-7140)	98-01	Y	1	26022453
	4-A15	6.635	CAP, P/S FLUID RSVR (AC-DELCO #36-7259)	02	Y	1	26095119
2.	4-A15	6.635	RESERVOIR, P/S FLUID	98-02	Y	1	26046502

cardiagn.com

							1Y06-023
3.	4-A16	6.672	CLAMP, P/S FLUID RSVR INL HOSE (PART OF 4)	98-02	Y	2	26028657
4.	4-A15	6.671	HOSE, P/S FLUID RSVR INL (INCLS 3)	98-02	Y	1	26046910
5.	4-M14	2.277	BRACKET, GEN & P/S PUMP	98-02	Y	1	12555220
	4-A14	6.606	BRACKET, GEN & P/S PUMP (2.277)	98-02	Y	1	12555220
6.	4-A14	6.605	PUMP, P/S	98-02	Y	1	26046503
7.	4-A16	6.674	SEAL, P/S GR INL HOSE (O RING) (PART OF 8) (7.65MM IDX1.63MM THK)	98-02	Y	2	26001594
8.	4-A15	6.670	HOSE, P/S GR INL (INCLS 7)	98-02	Y	1	26046501
9.		8.948	CLAMP, WORM GEAR, 1/2-13/16 (P/S FLUID CLG HOSE) (PART OF 11)	98-02		1	22527587
10.	4-A14	6.602	SEAL, P/S FLUID CLG PIPE (O RING) (PART OF 11, 13) (7.65MM IDX1.63MM THK) (6.674)	98-02	Y	1	26001594
11.	4-A14	6.600	COOLER, P/S FLUID (INCLS 9, 10, 30)	98-00	Y (FE1)	1	26047343
	4-A14	6.600	COOLER, P/S FLUID (INCLS 9, 10, 30)	01-02	Y (FE1)	1	26076354
12.		8.948	CLAMP, WORM GEAR, 1/2-13/16 (P/S FLUID CLG HOSE) (PART OF 13)	98-02		1	22527587
13.	4-A14	6.600	COOLER, P/S FLUID (INCLS 10, 12)	98-00	Y (FE3)	1	26088760
	4-A14	6.600	COOLER, P/S FLUID (INCLS 10, 12)	01-02	Y (FE3, FE4)	1	26088744
14.	4-A14	6.602	BOLT, P/S FLUID CLR (M6X1X25, 23, 17 OD) (8.900)	98-01	Y	4	11516413
	4-A14	6.602	BOLT, P/S FLUID CLR (BLACK) (M6X1X25) (2.559)	02	Y	2	10094385
15.		8.900	BOLT, HWH, M8X1.25X40, SPL FULLTHD, AC PT, 10.9 PZOR (P/S PUMP FRT BR)	98-02		2	11515758
16.	4-A15	6.655	PULLEY, P/S PUMP	98-02	Y	1	12559890
17.	4-A15	6.655	CAP, P/S PUMP PUL HUB (7.1 DIA, 33MM) (PAINT TO MATCH) (15.100)	98-02	Y	1	10185925
18.	4-A14	6.606	BOLT, P/S PUMP BRKT (M8X1.25X84MM) (3.275)	98-02	Y	2	14078896
19.	4-A14	6.606	BRACE, P/S PUMP FRT	98-99	Y (LS1)	1	12555693
	4-A14	6.606	BRACE, P/S PUMP FRT (W/FRT BRACES, NO COMPATABLE 2ND DESIGN)	00	Y (LS1) (1ST DES)	1	12555693
	4-A14	6.606	BRACE, P/S PUMP FRT	01-02	Y (LS1)	1	12555693
20.		8.900	BOLT, HFH, M10X1.5X70, 30 THD, 22.3 OD, 9.8 MAT, 7114M FIN. MACH, REDUCED BODY (GEN BRKT) (POSN #2)	98-02		1	11516356
21.		8.900	BOLT, HFH, M10X1.5X80, 30 THD, 22.3 OD, 9.8, 7114M (GEN BRKT) (POSN #1)	98-02		3	11516357
22.	4-A15	6.635	BRACKET, P/S FLUID RSVR	98-02	Y	1	12555222
23.	4-A13	6.524	SHAFT, S/GR CPLG	98	Y	1	26068266
	4-A13	6.524	SHAFT, S/GR CPLG	99-02	Y	1	26057539

cardiagn.com

							1Y06-023
24.	4-A13	6.525	BOLT, INTER STRG SHF (POSN #2) (10X1.5X40.3)	98-02	Y	1	7847298
25.	4-A13	6.525	SHIELD, S/GR CPLG	98-02	Y	1	10285915
26.	4-C9	8.808	LABEL, INFL RST SYS SERV NTC	98-02	Y (AK5)	1	26017956
27.	4-A13	6.525	BOLT, INTER STRG SHF (POSN #1) (M10X1.5X31) (HFH NYLON LOCK) (6 POINT HEAD)	98	Y	1	26005756
	4-A13	6.525	BOLT, INTER STRG SHF (POSN #1) (M10X1.5X36) (HFH W/RETAINER NYLON LOCK) (UPR TO STRG COL)	99	Y	1	26058124
	4-A13	6.525	BOLT, INTER STRG SHF (M10X1.5X36) (HFH W/RETAINER NYLON LOCK) (UPR TO STRG COL)	00-02	Y	1	26058124
28.	4-A16	6.758	SEAL, STRG COL	98	Y	1	10253854
	4-A16	6.758	SEAL, STRG COL	99-02	Y	1	10306326
29.	4-A9	6.509	CLAMP, S/GR CPLG SHLD (8.948)	98-02	Y	1	10293740
30.	4-A14	6.602	CLIP, P/S FLUID CLG PIPE (PART OF 11) (6.672)	98-02	Y (FE1)	2	26034793
31.	4-A16	6.760	SHIM, STRG COL UPR SUPT	98-02	Y	1	10250273
32.		8.915	NUT, HEX W/CON WA, M8X1.25, 7.32 THK, 9, ZF (STRG COL) (POSN 1)	98-02		2	11514519
33.		8.917	NUT, HFH, M8X1.25, 17.9 OD, 738 THK, 13MM HEX, 10, ZF (STRG COL) (POSN 2) (8.915) (AC-DELCO #11514596)	98-02		2	11514596
34.	4-A12	6.521	BOLT, STRG COL BRKT (M8X1.25X47.91MM) (DOUBLE END STUD) (STRG COL ATTACH)	98-02	Y	2	10285245
35.	4-A12	6.521	NUT, STRG COL BRKT (STRG COL ATCH) (STRG COL ATTACH) (SPL NUT M8 X 1.25) (6.760)	98-02	Y	4	25606907
36.	4-A12	6.521	BOLT, STRG COL BRKT (LWR END OF STRG COL) (M8X1.25X31.48MM) (DOUBLE END ROUND COLLAR STUD)	98	Y	2	10413346
	4-A12	6.521	BOLT, STRG COL BRKT (LWR END OF STRG COL) (M8X1.25X31.48MM) (DOUBLE END ROUND COLLAR STUD)	99-02	Y	2	10413346
37.		8.915	NUT, HFH, 10X1.5 THD, 9.8 THK, 21.8 OD, 510M (10) ZF 7111M (1.062)	98-02		1	11514597

RPO DEFINITIONS
AK5 – RESTRAINT SYSTEM,FRONT SEAT,INFLATABLE,DRIVER AND PASSENGER
FE1 -- SUSPENSION SYSTEM,SOFT RIDE
FE3 – SUSPENSION SYSTEM,SPORT
FE4 – SUSPENSION SYSTEM SPECIAL RIDE & HANDLING
LS1 – ENGINE GAS, 8 CYL, 5.7L, SFI, ALUMINUM ENGINE

cardiagn.com

ILLUSTRATION INDEX

	TITLE	GRID
1997–2002	Y FRAME ASSEMBLY	4–G4
1997–2002	Y SUSPENSION/REAR	4–G8
1998–2002	Y SUSPENSION CONTROLS/ELECTRONIC (JL4)	4–G14
1997–2000	Y BUMPER/FRONT	4–G15
2001–2002	Y BUMPER/FRONT	4–G21
1997–2002	Y BUMPER/REAR	4–G26

cardiagn.com

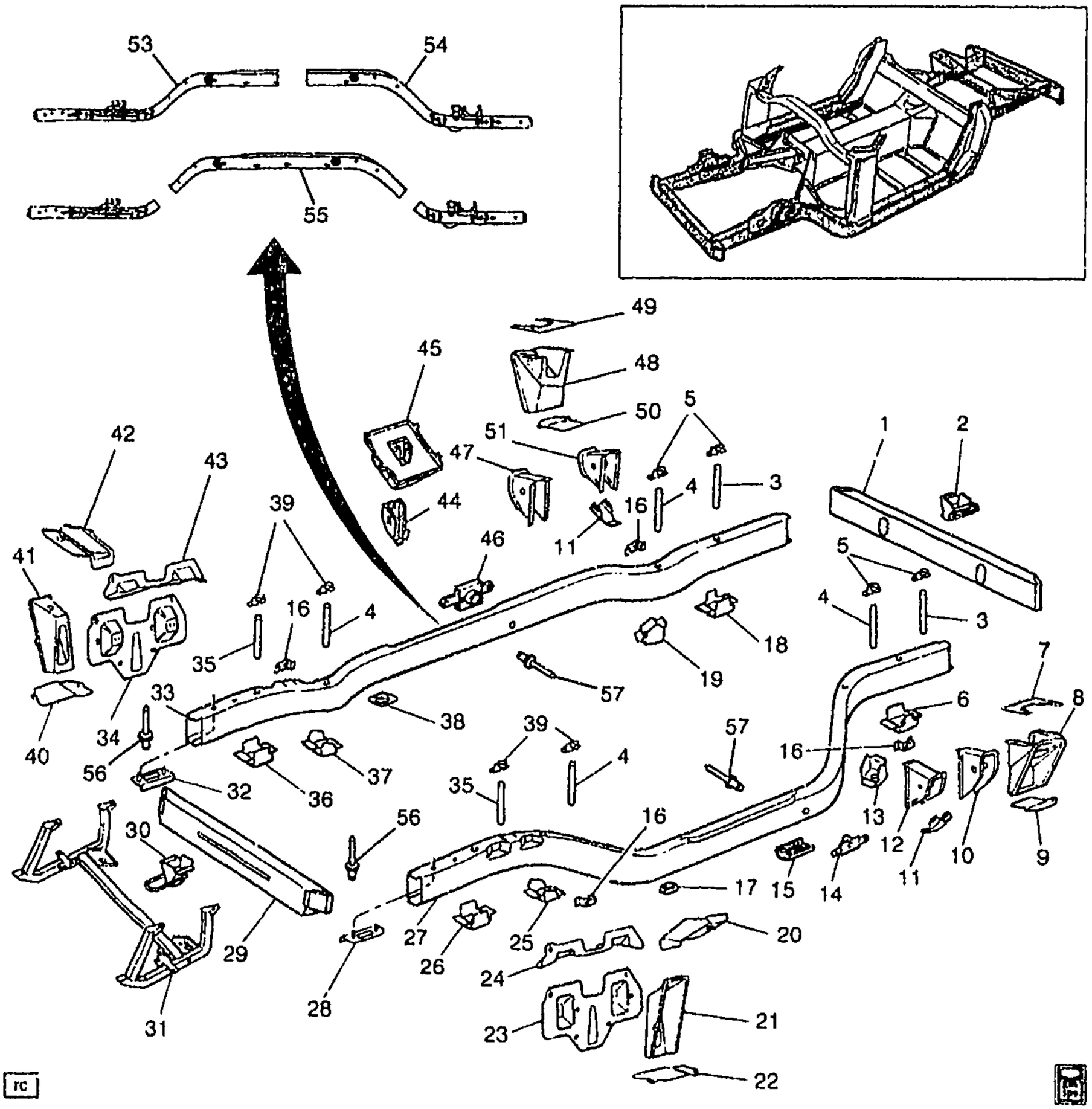

1Y07-024

1997-2002 Y FRAME ASSEMBLY

1.	4-B15	7.831	BAR, RR BPR IMP	97-02	Y	1	12533362
2.	4-B8	7.068	HOOK, RR TOW	97-02	Y (V76) (EXPORT)	1	10281052
3.	4-N21	12.980	SPACER, U/B S/RL	97	Y	2	10257863
		N.S.	SPACER, U/B S/RL	98-02			
4.		DISCON	SPACER, U/B S/RL	97	Y	4	10257861
		N.S.	SPACER, U/B S/RL	98-02			
5.	4-B7	7.039	LOCATOR, RR C/MBR	97-02	Y	4	10280876
6.	4-B7	7.039	BRACKET, RR C/MBR (RR) (REAR)	97-02	Y	LH	10260655

cardiagn.com

							1Y07-024
7.	4-B10	7.395	REINFORCEMENT, RR S/ABS BRKT (UPR) (#101) (PART OF 54))	97-02	Y	LH	10257875
8.	4-B10	7.380	BRACKET, RR S/ABS LWR (PART OF 54)	97-02	Y	LH	10421159
9.	4-B10	7.395	REINFORCEMENT, RR S/ABS BRKT (LWR)	97-02	Y	2	10276073
10.	4-N16	5.380	BRACKET, RR SUSP UPR CONT ARM (RR) (PART OF 54))	97-02	Y	LH	10281367
11.	4-N16	5.380	REINFORCEMENT, RR SUSP CONT ARM BRKT	97-02	Y	2	10280564
12.	4-N16	5.380	BRACKET, RR SUSP UPR CONT ARM (FRT) (#102) (PART OF 54))	97-02	Y	LH	10281365
13.	4-B7	7.039	BRACKET, RR C/MBR (FRT) (#103) (FRONT)	97-02	Y	LH	10257867
14.	4-N25	14.875	PLATE, D/SEAT BELT RETR ANC (PART OF 54)	97-02	Y (AK5)	1	10403689
15.	4-B8	7.068	BRACKET, RR TIE DN (PART OF 53, 54)	97-02	Y	2	10414186
	4-B8	7.068	RIVET, RR TIE DN BRKT (PART OF 53, 54) (11.419)	97-02	Y	4	10285827
16.	4-N15	4.681	BRACKET, FRT BRK HOSE (PART OF 53)	97-02	Y	2	10281416
	4-N15	4.681	BRACKET, RR BRK HOSE (PART OF 53)	97-02	Y	2	10281416
17.	4-B8	7.068	BRACKET, FRT TIE DN	97-02	Y	2	10414186
	4-B8	7.068	RIVET, FRT TIE DN BRKT (11.419)	97-02	Y	4	10285827
18.	4-B7	7.039	BRACKET, RR C/MBR (RR) (REAR)	97-02	Y	RH	10260656
19.	4-B7	7.039	BRACKET, RR C/MBR (FRT) (#103) (FRONT)	97-02	Y	RH	10257868
20.	4-B10	7.395	REINFORCEMENT, FRT S/ABS BRKT (UPR) (REF 1X195502A) (PART OF 53))	97-02	Y	LH	10414209
21.	4-B10	7.380	BRACKET, FRT S/ABS LWR (PART OF 53)	97-02	Y	LH	10262061
22.	4-B10	7.395	REINFORCEMENT, FRT S/ABS BRKT (LWR) (PART OF 53))	97-02	Y	LH	10413182
23.	4-A7	6.177	REINFORCEMENT, FRT UPR CONT ARM BRKT (#20, LWR) (PART OF 53)	97-01	Y	LH	10421764
	4-B10	7.395	BRACKET, FRT S/ABS UPR (PART OF 53)	02	Y	LH	10318764
24.	4-A7	6.177	BRACKET, FRT SUSP UPR CONT ARM (#21) (PART OF 53)	97-02	Y	LH	10421762
25.	4-B7	7.039	BRACKET, FRT C/MBR (RR) (PART OF 53))	97-02	Y	LH	10257865
26.	4-B7	7.039	BRACKET, FRT C/MBR (FRT) (PART OF 53))	97-02	Y	LH	10260651
27.		N.S.	RAIL, U/B SI			LH	
28.	4-C7	8.015	PLATE, HOOD HGE MT (PART OF 53)	97-02	Y	LH	10401746
29.	4-B15	7.831	BAR, FRT BPR IMP	97-02	Y	1	12533361
30.	4-B8	7.068	HOOK, FRT TOW	97-02	Y (V76) (EXPORT)	1	10281051
31.	4-B16	7.836	PLATE, FRT BPR IMP BAR SKID (MAY NEED NUT 10281493 AND BOLT 11515919)	97-02	Y	1	10400765

cardiagn.com

						1Y07–024	
32.	4–C7	8.015	PLATE, HOOD HGE MT	97–02	Y	RH	10401747
33.		N.S.	RAIL, U/B SI			RH	
34.	4–A7	6.177	REINFORCEMENT, FRT UPR CONT ARM BRKT (#20, LWR) (AC–DELCO #10421765)	97–01	Y	RH	10421765
	4–B10	7.395	BRACKET, FRT S/ABS UPR	02	Y	RH	10318765
35.	4–N21	12.980	SPACER, U/B S/RL	97	Y	2	10253535
		N.S.	SPACER, U/B S/RL	98–02			
36.	4–B7	7.039	BRACKET, FRT C/MBR (FRT)	97–02	Y	RH	10260652
37.	4–B7	7.039	BRACKET, RR C/MBR (RR) (REAR)	97–02	Y	RH	10257866
38.	4–B8	7.068	BRACKET, FRT TIE DN (PART OF 53, 54)	97–02	Y	2	10414186
	4–B8	7.068	RIVET, FRT TIE DN BRKT (PART OF 54) (11.419)	97–02	Y	4	10285827
39.	4–B7	7.039	LOCATOR, FRT C/MBR (PART OF 53, 54)	97–02	Y	4	10280876
40.	4–B10	7.395	REINFORCEMENT, FRT S/ABS BRKT (LWR)	97–02	Y	RH	10413183
41.	4–B10	7.380	BRACKET, FRT S/ABS LWR	97–02	Y	RH	10262062
42.	4–B10	7.395	REINFORCEMENT, FRT S/ABS BRKT (UPR) (REF 1X195716A)	97–02	Y	RH	10274240
43.	4–A7	6.177	BRACKET, FRT SUSP UPR CONT ARM (#21)	97–02	Y	RH	10421763
44.	4–M14	2.333	SUPPORT, BAT TRAY	97–02	Y	1	10400530
45.	4–M14	2.333	TRAY, BAT (W/SUPT)	97–02	Y	1	10268430
46.	4–N25	14.875	PLATE, P/SEAT BELT RETR ANC (PART OF 53, 55)	97–02	Y (AK5)	1	10403689
47.	4–N16	5.380	BRACKET, RR SUSP UPR CONT ARM (FRT) (#102)	97–02	Y	RH	10281366
48.	4–B10	7.380	BRACKET, RR S/ABS LWR	97–02	Y	RH	10421160
49.	4–B10	7.395	REINFORCEMENT, RR S/ABS BRKT (UPR) (#101)	97–02	Y	RH	10257876
50.	4–B10	7.395	REINFORCEMENT, RR S/ABS BRKT (LWR) (PART OF 54))	97–02	Y	2	10276073
51.	4–N16	5.380	BRACKET, RR SUSP UPR CONT ARM (RR)	97–02	Y	RH	10281368
53.	4–N21	12.980	RAIL, U/B FRT SI (INCLS 15, 16, 20–26, 28, 38, 39, 46, 57) (INCLUDES NUT 10281493)	97–02	Y	LH	12533430
	4–N21	12.980	RAIL, U/B FRT SI (INCLS 15, 16, 20–26, 28, 38, 39, 46, 57) (INCLUDES NUT 10281493)	97–02	Y	RH	12533431
54.	4–N21	12.980	RAIL, U/B RR SI (INCLS 7, 8, 10, 12, 14–16, 38, 39, 46, 50, 57)	97–02	Y	LH	12533432
	4–N21	12.980	RAIL, U/B RR SI (INCLS 7, 8, 10, 12, 14–16, 38, 39, 46, 50, 57)	97–02	Y	RH	12533433
55.	4–N21	12.980	RAIL, U/B SI (CTR) (INCLS 46, 57)	97–02	Y	LH	12533434
	4–N21	12.980	RAIL, U/B SI (CTR) (INCLS 46, 57)	97–02	Y	RH	12533435
56.	4–C7	8.015	RIVET, HOOD HGE ANC PLT	97–02	Y	2	27000093

cardiagn.com

				1Y07–024	
57.	8.967	RIVET, POP, 3/16X.375 SHANK, .562 OD DOME, SELF PLUG, AL, PL, .047–.078 GRP (P/ST BELT RETR ANC PLT) (PART OF 53, 54, 55))	97–02	2	9442468
	8.967	RIVET, POP, 3/16X.375 SHANK, .562 OD DOME, SELF PLUG, AL, PL, .047–.078 GRP (D/ST BELT RETR ANC PLT)	97–02	2	9442468

RPO DEFINITIONS
AK5 – RESTRAINT SYSTEM,FRONT SEAT,INFLATABLE,DRIVER AND PASSENGER
V76 – HOOK,FRONT TOW

cardiagn.com

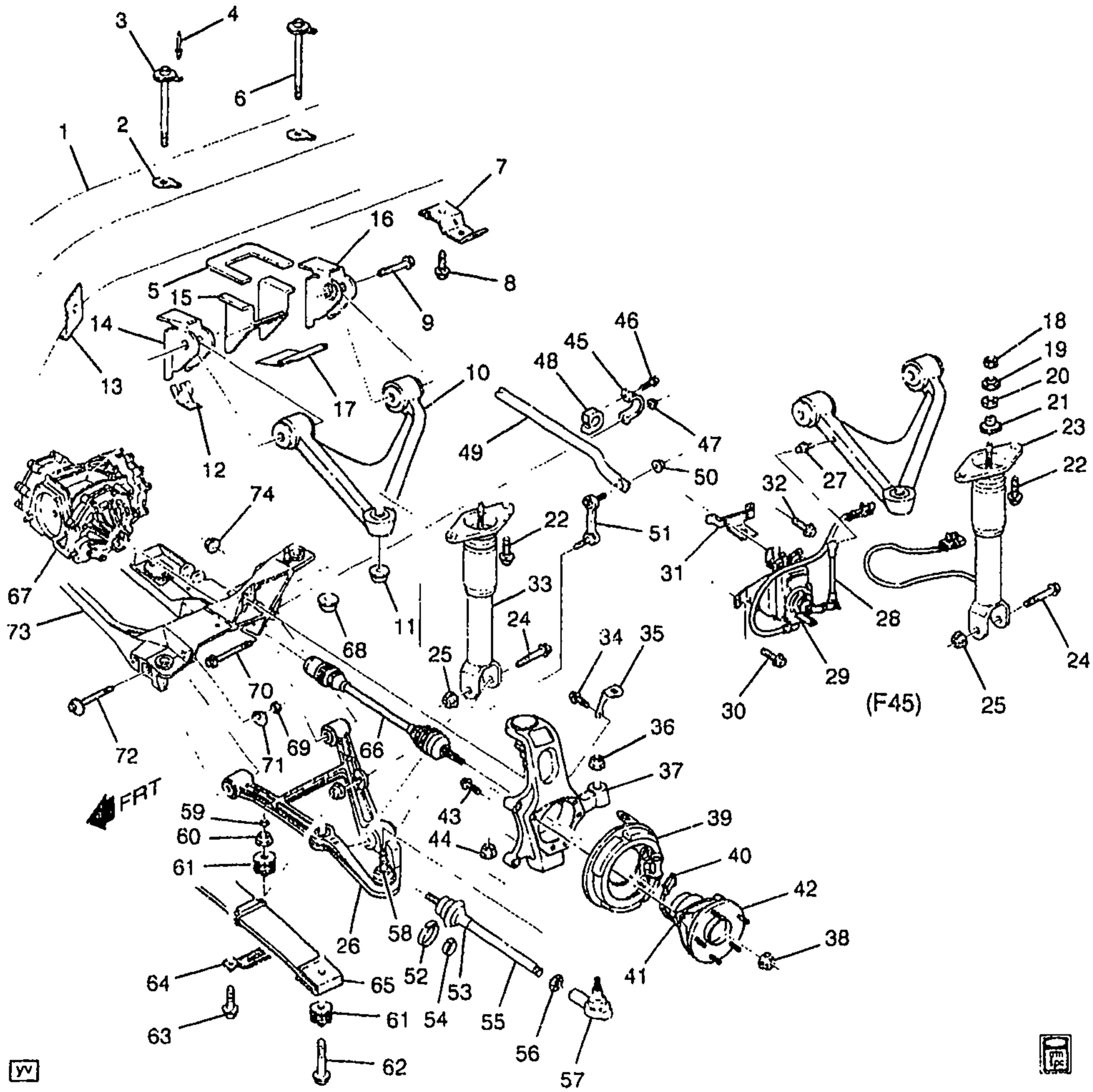

1Y07-025

1997-2002 Y SUSPENSION/REAR

1.		N.S.	RAIL, U/B SI (FOR RAILS, SEE FRAME ART IN GRP 7)				
2.	4-N21	12.980	SPACER, U/B S/RL (#104) (BLUE)	97	Y	2	10257863
	4-N21	12.980	SPACER, U/B S/RL (#107) (RED)	97	Y	2	10253535
		N.S.	SPACER, U/B S/RL	98-02			
3.	4-B7	7.014	BOLT, RR C/MBR (FRT BOLT) (POSN #1)	97-02	Y	2	10281322
4.	4-B7	7.039	RIVET, RR C/MBR BR (C/MBR BOLTS TO RAIL) (10.512)	97-02	Y	4	10274355

cardiagn.com

							1Y07-025
5.	4-B10	7.395	REINFORCEMENT, RR S/ABS BRKT (UPR)	97-02	Y	LH	10257875
	4-B10	7.395	REINFORCEMENT, RR S/ABS BRKT (UPR)	97-02	Y	RH	10257876
6.	4-B7	7.014	BOLT, RR C/MBR (RR BOLT) (POSN #2)	97-02	Y	2	10281321
7.	4-B13	7.475	BRACKET, ELEK SUSP RR POSN SEN LEAD (QTY 1 LH SEN, QTY 1 RH SEN)	97-02	Y (F45)	2	10280511
8.		8.977	SCREW, HEX W/FL WA M4.2X2.25X20 TAP POR (ELEK SUSP RR POSN SEN LEAD BRKT) (W/F45)	97-02		2	11508443
9.	4-N16	5.383	BOLT, RR SUSP UPR CONT ARM (M12X1.75X80) (8.900)	97-02	Y	4	11515816
10.	4-N16	5.382	ARM, RR SUSP UPR CONT (COMPOSITE)	97-02	Y	LH	10233620
	4-N16	5.382	ARM, RR SUSP UPR CONT (COMPOSITE)	97-02	Y	RH	10233621
11.	4-N17	5.806	NUT, RR SUSP KNU (UPR BALL STUD) (POSN #2) (M12.0X1.75X10.6) (8.917)	97-02	Y	2	3537772
12.	4-N16	5.380	REINFORCEMENT, RR SUSP CONT ARM BRKT	97-02	Y	2	10280564
13.	4-B7	7.039	BRACKET, RR C/MBR (FRONT)	97-02	Y	LH	10257867
	4-B7	7.039	BRACKET, RR C/MBR (FRONT)	97-02	Y	RH	10257868
	4-B7	7.039	BRACKET, RR C/MBR (REAR)	97-02	Y	LH	10260655
	4-B7	7.039	BRACKET, RR C/MBR (REAR)	97-02	Y	RH	10260656
14.	4-N16	5.380	BRACKET, RR SUSP UPR CONT ARM (FRT)	97-02	Y	LH	10281365
	4-N16	5.380	BRACKET, RR SUSP UPR CONT ARM (FRT)	97-02	Y	RH	10281366
15.	4-B10	7.380	BRACKET, RR S/ABS LWR	97-02	Y	LH	10421159
	4-B10	7.380	BRACKET, RR S/ABS LWR	97-02	Y	RH	10421160
16.	4-N16	5.380	BRACKET, RR SUSP UPR CONT ARM (RR)	97-02	Y	LH	10281367
	4-N16	5.380	BRACKET, RR SUSP UPR CONT ARM (RR)	97-02	Y	RH	10281368
17.	4-B10	7.395	REINFORCEMENT, RR S/ABS BRKT (LWR)	97-02	Y	2	10276073
18.		8.917	NUT, HFH, M8X1.25X8.8, 17.9 OD, 10 DIN, PREV TORQUE (RR S/ABS UPR INSL)	97-02		2	11517031
19.	4-B10	7.389	RETAINER, RR S/ABS UPR INSL	97-99	Y	2	14093133
	4-B10	7.389	RETAINER, RR S/ABS UPR INSL	00-02	Y	2	14071397
20.	4-B10	7.388	INSULATOR, RR S/ABS UPR	97-02	Y	2	10157967
	4-B10	7.388	INSULATOR, RR S/ABS UPR	02	YY37 (FE4)	2	10284724
	4-B10	7.388	INSULATOR, RR S/ABS UPR (SMALL, UPR)	02	YY37	2	10157967
21.	4-B10	7.388	INSULATOR, RR S/ABS LWR	97-02	Y	2	10157966
22.		8.900	BOLT, HWH, M8X1.25X32, 22.9 THD, 9.8, PS (RR S/ABS UPR BRKT)	97-02		4	12551187
23.	4-B9	7.345	ABSORBER, RR SHK (W/FE1, F45) (AC-DELCO #580-124)	97-98	Y	LH	22064827
	4-B9	7.345	ABSORBER, RR SHK (W/FE1, F45) (AC-DELCO #580-125)	97-98	Y	RH	22064828

cardiagn.com

							1Y07-025
	4-B9	7.345	ABSORBER, RR SHK (W/FE1, F45) (AC-DELCO #580-124) ...	99-02	Y	LH	22064827
	4-B9	7.345	ABSORBER, RR SHK (W/FE1, F45) (AC-DELCO #580-125) ...	99-02	Y	RH	22064828
24.	4-B10	7.347	BOLT, RR S/ABS (M16X2X100, 9.8) (5.416)	97-02	Y	2	14048990
25.		8.917	NUT, HFH LK 16X2X18.9 34.2 OD 10 7111M PREV TORQ (RR S/ABS)	97-02	.....	2	11516383
26.	4-N16	5.382	ARM, RR SUSP LWR CONT (PERM MOLD ALUM)	97-02	Y	RH	10233636
	4-N16	5.382	ARM, RR SUSP LWR CONT (WITH LWR BALL STUD) (PERM MOLD ALUM)	97-02	Y	LH	10233635
27.	4-B14	7.477	STUD, ELEK SUSP RR POSN SEN LINK BALL (MATES TO RR UPR CONT ARM)	97-02	Y (F45)	2	10271003
28.	4-B14	7.477	LINK, ELEK SUSP RR POSN SEN (PART OF 29)	97-02	Y (F45)	LH	22154109
	4-B14	7.477	LINK, ELEK SUSP RR POSN SEN (PART OF 29)	97-02	Y (F45)	RH	22154110
29.	4-B13	7.475	SENSOR, ELEK SUSP RR POSN (W/RR VERT ACCLRM) (INCLS 28)	97-02	Y (F45)	LH	22153637
	4-B13	7.475	SENSOR, ELEK SUSP RR POSN (W/RR VERT ACCLRM) (INCLS 28)	97-02	Y (F45)	RH	22153638
30.		8.977	SCREW, HEX W/FLAT WA (ELEK SUSP RR POSN SEN BRKT)	97-02	.....	2	12337828
31.	4-N15	4.681	BRACKET, RR BRK HOSE	97-02	Y	2	10281416
32.		8.900	BOLT/SCREW, HEX W/FL WA 17 OD, M6X1X20, 9.8, 4345M, DOG PT (RR BRK HOSE BRKT)	97-02	.....	2	11515704
33.	4-B9	7.345	ABSORBER, RR SHK (W/FE3) (AC-DELCO #10416669)	97	Y	2	10416669
	4-B9	7.345	ABSORBER, RR SHK (W/FE1, EXC F45) (AC-DELCO #560-200)	97-02	Y	2	10431991
	4-B9	7.345	ABSORBER, RR SHK (W/FE3) (AC-DELCO #10416669)	98-02	Y	2	10416669
34.		8.900	BOLT, HFH, M10X1.5X70, 30 THD, 22.3 OD, 9.8 MAT, 7114M FIN, MACH, REDUCED BODY (RR BRK) (PARK BRK MTG)	97-02	.....	4	11516356
35.	4-N16	4.785	BRACKET, PARK BRK CBL	97-02	Y	LH	10262949
	4-N16	4.785	BRACKET, PARK BRK CBL	97-02	Y	RH	10262950
36.	4-N17	5.416	NUT, RR SUSP ADJ LINK (OTR) (POSN #1) (M12.0X1.75X10.6) (8.917)	97-02	Y	2	3537772
37.	4-N17	5.806	KNUCKLE, RR SUSP (COMMON KNUCKLE FOR LT/FRT & RT/RR) (6.020)	97-02	Y	RH	10237239
	4-N17	5.806	KNUCKLE, RR SUSP (COMMON KNUCKLE FOR RT/FRT & LT/RR) (6 020)	97-02	Y	LH	10237238
38.	4-N17	5.422	NUT, RR WHL DRV UJT SHF (M27X2X18) (HFH LOCK) (6.056) (AC-DELCO #36-4135)	97-02	Y	2	10257766

cardiagn.com

							1Y07-025
39.	4-N16	5.149	BRAKE KIT, RR PARK	97-98	Y	2	12530691
	4-N16	5.149	BRAKE KIT, RR PARK	99-02	Y	2	12455801
40.		N.S.	CONNECTOR, LEAD-SPD SENSOR (PART OF BRG)				
41.		N.S.	SENSOR, WHL SPD (RR WHL) (PART OF BRG)				
42.	4-N18	5.855	BEARING, RR WHL (W/INTEGRAL SENSOR) (AC-DELCO #20-71)	97-02	Y	2	7470571
43.	4-N18	5.816	BOLT, RR WHL HUB (5.812)	97-02	Y	6	10414261
44.	4-N17	5.806	NUT, RR SUSP KNU (LWR BALL STUD) (POSN #1) (M14X2.0 6H THD) (6.164)	97-02	Y	2	10282253
45.	4-B9	7.242	CLAMP, RR STAB SHF INSL	97-02	Y	2	10426591
46.	4-B9	7.242	BOLT, RR STAB SHF INSL CLA (UPR) (8.900)	97-02	Y	2	11515807
47.		8.917	NUT, HEX FLG PREVAILING TORQ (M12X1.75X14) (ZO 10) (RR SUSP LWR CONT ARM) (RR POSN #1)	97-02		2	11515744
48.	4-B9	7.243	INSULATOR, RR STAB SHF	97-99	Y (FE3)	2	10401553
	4-B9	7.243	INSULATOR, RR STAB SHF	97-02	Y (FE1)	2	10431950
	4-B9	7.243	INSULATOR, RR STAB SHF	01-02	Y (FE3, FE4)	2	10431951
	4-B9	7.243	INSULATOR, RR STAB SHF (OIL IMPREGNATED RUBBER, WHEN PART NUMBER CHANGES, REPLACE BOTH LEFT AND RIGHT INSULATORS AS PAIR)	00	Y (FE3)	2	10431951
49.	4-B8	7.241	SHAFT, RR STAB	97-02	Y (FE1)	1	10283944
	4-B8	7.241	SHAFT, RR STAB	97-99	Y (FE3)	1	10283945
	4-B8	7.241	SHAFT, RR STAB	00	Y (FE3)	1	10424743
	4-B8	7.241	SHAFT, RR STAB	01-02	Y (FE3, FE4)	1	10424743
50.		8.917	NUT, HEX FLG PREVAILING TORQ (M12X1.75X14) (ZO 10) (RR STAB SHF LINK)	97-02		4	11515744
51.	4-B8	7.240	LINK, RR STAB SHF	97-01	Y	2	10423035
	4-B8	7.240	LINK, RR STAB SHF	02	Y	2	10435298
52.	4-N17	5.416	CLAMP, RR SUSP ADJ LINK BOOT (RETAINING SEAL) (44MM)	97-02	Y	2	26036823
53.	4-N17	5.416	BOOT, RR SUSP ADJ LINK (RR TOE LINK SEAL)	97-02	Y	1	7844424
54.	4-N17	5.416	CLAMP, RR SUSP ADJ LINK BOOT (ROD BOOT) (19MM)	97-02	Y	2	7844100
55.	4-N17	5.416	LINK KIT, RR SUSP ADJ	97	Y	1	26058599
	4-N17	5.416	LINK KIT, RR SUSP ADJ	98-02	Y	2	26072661
56.	4-N17	5.416	NUT, RR SUSP ADJ LINK (M14X1.5X11, 510M (5), ZC) (6.526)	97-02	Y	2	26017267
57.	4-N17	5.416	END KIT, RR SUSP ADJ LINK OTR (5.415)	97-02	Y	2	26058600
58.		N.S.	STUD, RR SUSP LWR CONT ARM BALL				
59.		8.921	NUT, PUSH ON, FOR 10MM STUD, 19 OD, 1.4 THK, 1050 STL, 4435M FIN (RR SPR) (POSN #2)	97		2	11508192

cardiagn.com

							1Y07–025
	4–B15	7.545	RETAINER, RR SPR INSL (1.00MM THK X 10.0)	98–02	Y	2	10408970
60.		8.917	NUT, HFH LK 14X2X16 19.6 OD 10 7111M (RR SPR) (POSN #1)	97–02		2	11516382
61.	4–B15	7.545	INSULATOR, RR SPR (30MM LG) (WHEN USING IN PLACE OF INSULATOR WITH STEEL WASHER, REPLACE ATTACHING NUTS W/10408969 & REPLACE ATTACHING BOLT W/10408968)	97–02	Y	4	10408967
62.	4–B14	7.518	BOLT, RR SPR (POSN #1)	97–02	Y	2	10408968
63.		8.900	BOLT, M10X1.5X 25 POINTED, 21MM THD, 21.5 OD (RR SPR) (POSN #2)	97–98	Y	4	11515765
	4–B14	7.518	BOLT, RR SPR (POSN #2) (M10X12X31) (7.242)	99–02	Y	4	3545602
64.	4–B15	7.545	RETAINER, RR SPR INSL	97–02	Y	2	10280659
65.	4–B14	7.503	SPRING, RR	97	Y (FE1)	1	22146323
	4–B14	7.503	SPRING, RR	97	Y (FE3)	1	22146646
	4–B14	7.503	SPRING, RR	98–02	Y (M30, FE1)	1	22146323
	4–B14	7.503	SPRING, RR	98–02	Y (M30, FE3)	1	22146646
	4–B14	7.503	SPRING, RR	98–02	Y (MM6, FE1)	1	22179019
	4–B14	7.503	SPRING, RR	98–00	Y (MM6, FE3)	1	22179020
	4–B14	7.503	SPRING, RR	01–02	Y07–67 (MM6, FE3)	1	22179020
	4–B14	7.503	SPRING, RR	01–02	Y37 (M12, FE4)	1	22188038
66.	4–N17	5.420	SHAFT, RR WHL DRV UJT	97–02	Y	2	10226316
	4–N17	5.428	JOINT KIT, RR WHL DRV SHF OTR	97–02	Y	2	12532153
	4–N17	5.428	JOINT KIT, RR WHL DRV SHF INR	97–02	Y	2	12532154
	4–N17	5.430	BOOT KIT, RR OTR SHF	97–02	Y	2	12532155
	4–N17	5.430	BOOT KIT, RR INR SHF	97–02	Y	2	12532156
	4–N17	5.428	BAND & CLIP KIT, RR SHF	97–02	Y	2	12532157
67.	4–N17	5.505	CARRIER, DIFF (3.15 RATIO)	97–02	Y (LS1, M30, G90)	1	12556313
	4–N17	5.505	CARRIER, DIFF (2.73 RATIO) (W/GEARS) (5.546)	97–02	Y (M30, GU2)	1	12554837
	4–N17	5.505	CARRIER, DIFF	01	YY37 (M12, GU6)	1	12561853
	4–N17	5.505	CARRIER, DIFF	02	YY37 (LS6, M12, GU6)	1	12572683
	4–N17	5.505	CARRIER, DIFF (W/GEARS) (3.42 RATIO)	97–02	Y (MM6)	1	12551769
68.	4–B7	7.014	NUT, RR C/MBR (M14X2X11.92) (HEX W/CONICAL WA PREV TORQ) (5.383)	97–02	Y	4	3537773
69.		8.917	NUT, HFH LK 14X2X16 19.6 OD 10 7111M (RR SUSP LWR CONT ARM) (FWD POSN #2)	97–02		2	11516382
70.	4–N16	5.383	BOLT, RR SUSP LWR CONT ARM (RR POSN #1) (0.002)	97–02	Y	2	10200097
71.	4–N16	5.382	CAM, RR SUSP LWR CONT ARM ADJ (FWD POSN) (5.381)	97–02	Y	2	10254818
72.	4–N16	5.383	BOLT, RR SUSP LWR CONT ARM (FWD POSN #2) (138.6MM LGXM14X2.6)	97–02	Y	2	10254819
73.	4–B7	7.014	CROSSMEMBER, RR (CAST ALUM)	97	Y	1	10266823
	4–B7	7.014	CROSSMEMBER, RR (CAST ALUM)	98	Y (EXC JAG)	1	10266823

cardiagn.com

							1Y07-025
	4-B7	7.014	CROSSMEMBER, RR	98	Y (JAG)	1	10266824
	4-B7	7.014	CROSSMEMBER, RR	99-02	Y	1	10266824
74.		8.917	NUT, HFH LK 16X2X18.9 34.2 OD 10 7111M PREV TORQ (RR SUSP ADJ LINK) (INR) (POSN #2)	97-02	....	2	11516383
75.	4-B11	7.450	SWITCH, ELEK SUSP (INCLS 78)	97	Y (F45)	1	12135153
	4-B11	7.450	SWITCH, ELEK SUSP (INCLS 78)	98-99	Y07-67 (F45) (EXC JL4)	1	12135153
	4-B11	7.450	SWITCH, ELEK SUSP (INCLS 78)	98	Y (F45, JL4)	1	12198725
	4-B11	7.450	SWITCH, ELEK SUSP (INCLS 78)	99-01	Y07-67 (F45, JL4)	1	12198725
	4-B11	7.450	SWITCH, ELEK SUSP (INCLS 78)	00	Y07-67 (F45) (EXC C88, JL4)	1	10440628
	4-B11	7.450	SWITCH, ELEK SUSP (INCLS 78)	00-02	Y07-67 (F45, JL4) (EXC C88)	1	10440630
	4-D26	9.765	BULB, ELEK TRACT CONT IND LP (.5CP) (9.279) (AC-DELCO #16056613)	97	Y	1	16056613
	4-D26	9.765	BULB, ELEK TRACT CONT IND LP (.5CP) (9.279) (AC-DELCO #16056613)	98	Y (EXC JL4)	1	16056613
	4-D26	9.765	BULB, ELEK TRACT CONT IND LP (.5CP) (9.279) (AC-DELCO #16056613)	99	Y (EXC F45, JL4)	1	16056613
	4-D26	9.765	BULB, ELEK TRACT CONT IND LP (.5CP) (9.279) (AC-DELCO #16056613)	99	YY07-67 (F45) (EXC JL4)	1	16056613
	4-B11	7.450	SWITCH, ELEK SUSP (INCLS 78)	00	Y07-67 (C88, F45) (EXC JL4) (EXPORT) ..	1	12135153
	4-B11	7.450	SWITCH, ELEK SUSP (INCLS 78)	00-02	Y07-67 (C88, F45) (EXPORT)	1	12198725
	4-D26	9.765	BULB, ELEK TRACT CONT IND LP (.5CP) (9.279) (AC-DELCO #16056613)	00-02	Y07-67 (C88) (EXC JL4) (EXPORT)	1	16056613

RPO DEFINITIONS
C88 – SWITCH INFL RST I/P MDL MAN SUPPRESSION -- DELETE
FE1 – SUSPENSION SYSTEM,SOFT RIDE
FE3 – SUSPENSION SYSTEM,SPORT
FE4 – SUSPENSION SYSTEM SPECIAL RIDE & HANDLING
F45 – CHASSIS CONTINUOUS VALVE REAL TIME DAMPING
GU2 – AXLE,REAR,2.73 RATIO
GU6 – AXLE,REAR,3.42 RATIO
G90 – AXLE REAR 3.15 RATIO
JAG – BRAKE PROVISIONS ABS LOCATION
JL4 – CONTROL ACTIVE BRAKE
LS1 – ENGINE GAS, 8 CYL, 5.7L, SFI, ALUMINUM ENGINE
LS6 – ENGINE GAS, 8 CYL, 5.7L, SFI, ALUMINUM, HIGH OUTPUT
MM6 – TRANSMISSION MAN 6 SPD, BORG WARNER, 85MM, 1ST 2.66, 6TH 0.50, O/D
M12 – TRANSMISSION MAN 6 SPD, TREMEC, 85MM, 1ST 2.97, 6TH 0.57, O/D
M30 – TRANSMISSION,AUTOMATIC 4 SPEED,4L60E,ELECTRONIC

cardiagn.com

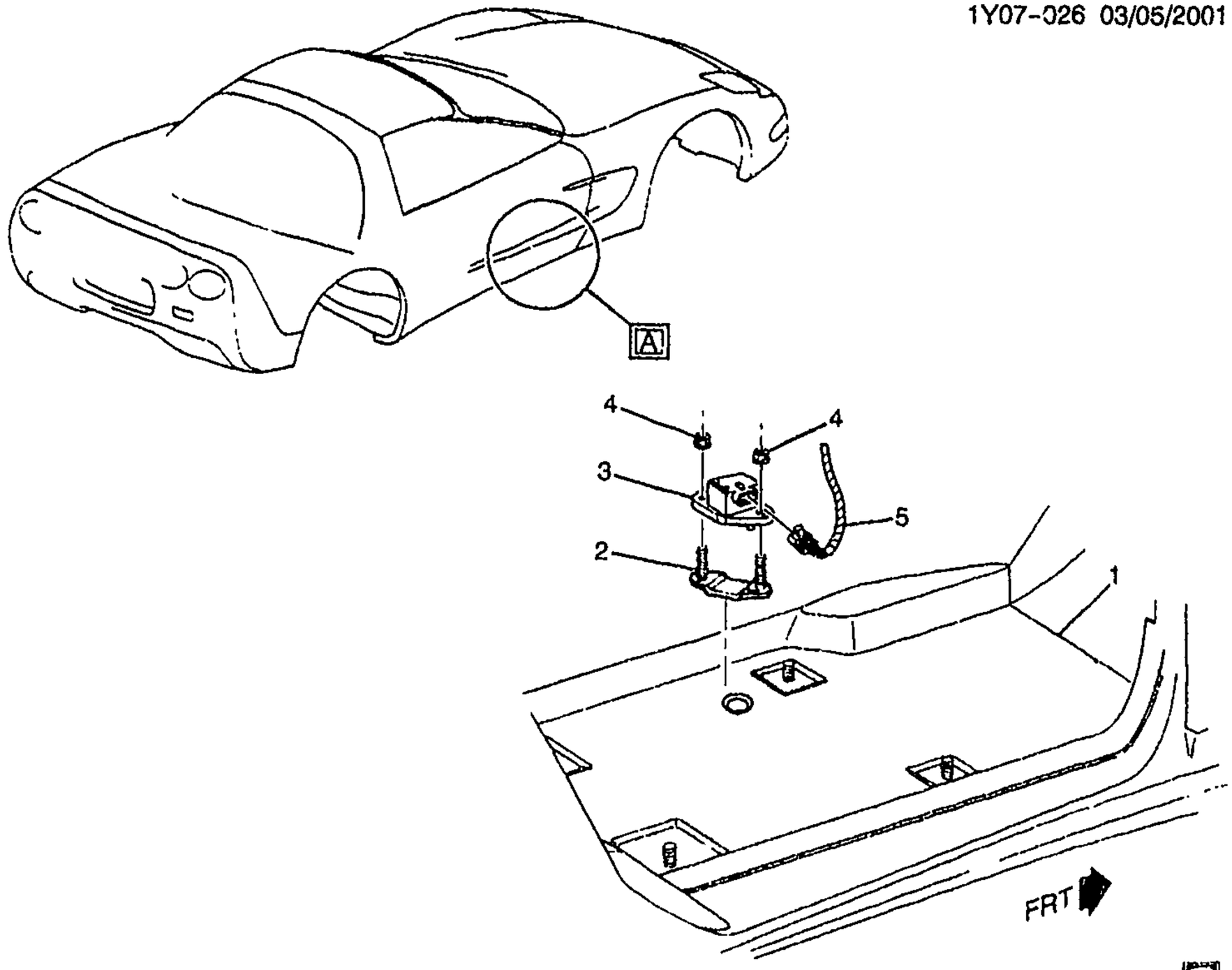

VIEW A

1Y07-026Y

1998-2002 Y SUSPENSION CONTROLS/ELECTRONIC (JL4)

1.		N.S.	PANEL, FLR				
2.	4-B11	7.440	BRACKET, VEH LATL ACCLRM	98-02	Y (JL4)	1	10290370
3.	4-B11	7.440	ACCELEROMETER, VEH LATL	98-99	Y (JL4)	1	25678191
	4-B11	7.440	ACCELEROMETER, VEH LATL	00-01	Y (JL4)	1	25697709
	4-B11	7.440	ACCELEROMETER, VEH LATL	02	Y	1	25697709
4.		8.915	NUT, M4X0.7 6H (VEH LATL ACCLRM)	98-02	Y	2	10180301
5.	4-N15	4.710	CONNECTOR, SEN-VEH LATL (3-WAY F) (2.170)	98-02	Y	1	12146121
	4-N15	4.710	CONNECTOR, SEN-VEH LATL (3-WAY F) (2.170)	02	Y (M30, CJ2, N37) (EXC T89)	1	12146121

RPO DEFINITIONS
CJ2 - HVAC SYSTEM AIR CONDITIONER FRT, AUTO TEMP CONT, AUX TEMP CONT
JL4 - CONTROL ACTIVE BRAKE
M30 -- TRANSMISSION,AUTOMATIC 4 SPEED,4L60E,ELECTRONIC
N37 - STEERING COLUMN,TILT AND TELESCOPING
T89 - LAMP,TAIL AND STOP(EXPORT)

cardiagn.com

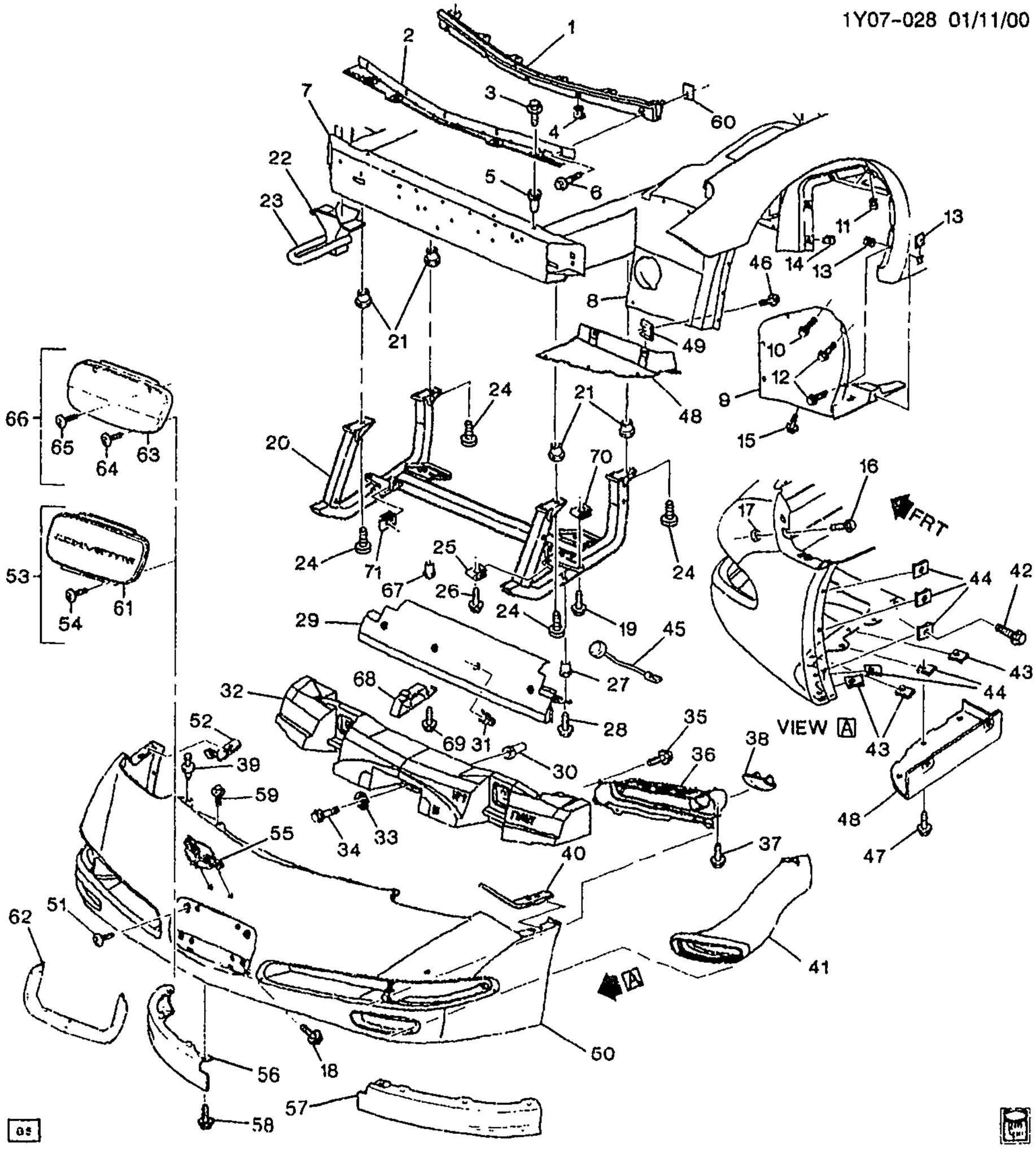

1Y07-028

1997-2000 Y BUMPER/FRONT

1.	4-B15	7.831	RETAINER, FRT BPR FASCIA (TO BRKT)	97-00	Y	1	10256973
2.	4-B17	7.869	BRACKET, FRT BPR FASCIA (STL HOLDS FASCIA TO BPR BEAM)	97-00	Y	1	10256972

cardiagn.com

							1Y07-028
	4-B17	7.874	BRACKET, FRT BPR FASCIA (STL HOLDS FASCIA TO BPR BEAM) (7.869)	97-00	Y	1	10256972
3.		8.900	BOLT, HEX W/WA (M6X1X20) (BRKT TO BAR)	97-00		4	10077321
4.		8.921	NUT-U SHAPE (M6X1, 1060 PEOR) MULIT-THREAD SPRING (FRT BPR FASCIA RET) (RET TO BRKT) (POSN #2)	97-00		7	11518121
5.	4-B15	7.831	NUT, FRT BPR FASCIA BRKT (BRKT TO BAR) (4.665)	97-00	Y	4	10281487
6.		8.900	BOLT, W/WA (M6X1X25) (FRT BPR FASCIA RET)	97-00		5	11514139
7.	4-B15	7.831	BAR, FRT BPR IMP	97-00	Y	1	12533361
8.	4-C9	8.153	PANEL, FRT W/H	97-00	Y	LH	10407333
	4-C9	8.153	PANEL, FRT W/H	97-00	Y	RH	10407334
9.	4-C9	8.153	PANEL KIT, FRT W/H (INCLS FRT W/H FIL PNL)	97-00	Y	LH	12455607
	4-C9	8.153	PANEL KIT, FRT W/H (INCLS FRT W/H FIL PNL)	97-00	Y	RH	12455608
10.		8.900	SCREW, M6X1X30, 11 THD, 12.5 OD, 4.8, 6047M, P-PT (POSN #1)	97-00		8	11508128
11.	4-C9	8.153	NUT, FRT W/H FIL PNL (POSN #3) (RH ONLY) (M6X1, 16.5X25.5) (W/WIRE PROTECTOR) (14.865)	97-98	Y	1	25602015
		N.S.	NUT, FRT W/H FIL PNL (POSN #3) (RH ONLY)	99-00			
12.		8.977	BOLT, HWH, M4.2X1.41X20, 7.8 OD, ST, 6172M, ZN BR, TAP, DRILL PT (POSN #2)	97-00		10	11513568
13.		8.921	NUT, U TYPE, MULTI THD, PREV TORQ, M4.2X1.41TAP, 8.1REACH, 0.65-3.80 PNLS 1065 PZOR (POSN #2) (AC-DELCO #11513599)	97-00		6	11513599
14.		8.921	NUT, U-TYPE, M4.2X1.41X10.5.5X22, 15 C/E, .65-3.8 PNL THK, 1050, ZF (FRT W/H FIL PNL) (POSN #1)	97-00		7	11515638
15.		8.977	BOLT, HWH, M4.2X1.41X20, 7.8 OD, ST, 6172M, ZN BR, TAP, DRILL PT (POSN #4)	97-00		10	11513568
16.		N.S.	STUD, FRT BPR FASCIA (NCSI) (PART OF REINF, F/FDR FRT)			1	
17.		8.917	NUT, HEX W/CON WA M6X1X5.5, 24-OD 9 PEOR (FRT BPR FASCIA TO FDR) (8.915)	97-00		4	11508388
18.		8.977	BOLT, HWH, M4.2X1.41X20, 7.8 OD, ST, 6172M, ZN BR, TAP, DRILL PT (LWR, AT FASCIA)	97-00		5	11513568
19.		8.900	BOLT, W/WA (M6X1X25) (FRT BPR FASCIA SKID PLT)	97		2	11514139
		8.977	BOLT-HEX W/ WASHER, 4.2X1.41X25, 17 OD, 6010M, NO (FRT BPR FASCIA SKID PLT)	98-00		2	11515429

cardiagn.com

							1Y07-028
20.	4-B16	7.836	PLATE, FRT BPR IMP BAR SKID (MAY NEED NUT 10281493 AND BOLT 11515919)	97-00	Y	1	10400765
21.	4-B16	7.836	NUT, FRT BPR IMP BAR SKID PLT (3.015)	97-00	Y	4	10281493
22.		N.S.	BRACKET, FRT TOW HOOK (PART OF 23)		.....		
23.	4-B8	7.068	HOOK, FRT TOW (INCLS 22)	97-00	Y (V76) (EXPORT)	1	10281051
24.		8.900	BOLT-HEX, M8X1.25X30, 22 THD, 24MM OD, 9.8, 7114M (FRT BPR IMP BAR SKID PLT)	97-00	.....	4	11516594
25.		8.921	NUT-U SHAPE (M6X1, 1060 PEOR) MULIT-THREAD SPRING (FRT BPR FASCIA LWR DFL BRKT) (TO INBOARD SKID BAR BRKT)	97	.....	2	11518121
		8.921	NUT, U-TYPE, M4.2X1.41X10.5.5X22, 15 C/E, .65-3.8 PNL THK, 1050, ZF (FRT BPR FASCIA LWR DFL BRKT) (TO INBOARD SKID BAR BRKT)	98-00	.....	2	11515638
26.		8.900	BOLT, W/WA (M6X1X25) (FRT BPR FASCIA LWR DFL SKID PLT)	97	.....	2	11514139
		8.977	BOLT-HEX W/ WASHER, 4.2X1.41X25, 17 OD, 6010M, NO (FRT BPR FASCIA LWR DFL SKID PLT)	98-00	.....	2	11515429
27.	4-B16	7.833	NUT, FRT A/DFL (TO SKID BAR) (4.665)	97-00	Y	2	10281487
28.		8.900	BOLT, HEX W/CON WA, M6X1X20 (FRT A/DFL TO SKID BAR)	97-00	.....	2	11514623
29.	4-M14	1.272	DEFLECTOR, FRT AIR (AIR DAM CTR) (INCLS 31, 45)	97-00	Y	1	10401458
30.	4-B17	7.840	NUT, FRT BPR ENGY ABS (TO IMPACT BAR) (4.665)	97-00	Y	3	10281487
31.	4-B16	7.833	SPRING, FRT A/DFL (PART OF 29)	98-00	Y	2	10401221
	4-M14	1.272	SPRING, FRT A/DFL (PART OF 29) (7.833)	98-00	Y	2	10401221
	4-B16	7.833	SPRING, FRT A/DFL (HOOK ON BOTH ENDS, FOR 1ST DES SEE 21030793) (PART OF 29)	97	Y (2ND DES)	2	10401221
	4-M14	1.272	SPRING, FRT A/DFL (HOOK ON BOTH ENDS, FOR 1ST DES SEE 21030793) (PART OF 29) (7.833) .	97	Y (2ND DES)	2	10401221
	4-B16	7.833	SPRING, FRT A/DFL (HOOK ON ONE END, FOR 2ND DES SEE 10401221) (PART OF 29)	97	Y (1ST DES)	4	21030793
	4-M14	1.272	SPRING, FRT A/DFL (HOOK ON ONE END, FOR 2ND DES SEE 10401221) (PART OF 29) (7.833) .	97	Y (1ST DES)	4	21030793
32.	4-B17	7.840	ABSORBER, FRT BPR FASCIA ENGY (AC-DELCO #10403040) (POLYPROPYLENE FOAM)	97-00	Y	1	10403040
33.	4-B17	7.840	SPACER, FRT BPR FASCIA ENGY ABS (ENERGY ABS TO IMP BAR)	97-00	Y	3	10277215

cardiagn.com

							TY07-028
34.		8.900	BOLT, HEX W/WA, M6X1X40, 9.8, POR, 24 OD, ACPNT (FRT BPR ENGY ABS)	97-00		1	11513677
35.		8.900	SCREW, HWH TAPPING M6.6X1.69X20 6010M BLK ZINC (F/END FASCIA DFL)	97-00		4	20007394
36.	4-B16	7.833	DEFLECTOR, F/END FASCIA	97-00	Y (EXC V76)	LH	10283575
	4-B16	7.833	DEFLECTOR, F/END FASCIA	97-00	Y (EXC V76)	RH	10283576
	4-B16	7.833	DEFLECTOR, F/END FASCIA	97-00	Y (V76) (EXPORT)	RH	10290249
	4-B16	7.833	DEFLECTOR, F/END FASCIA	97-00	Y (V76) (EXPORT)	LH	10291801
37.		8.977	BOLT, HEX W/LG FL WA M4.2X1.41X16 TAP POR (SHARK CAGE TO FASCIA)	97-00		2	11515730
38.	4-M14	1.263	FILLER, F/END FASCIA	97-00	Y (EXC T96)	LH	10283577
	4-M14	1.263	FILLER, F/END FASCIA	97-00	Y (EXC T96)	RH	10283578
39.	4-B15	7.831	RETAINER, FRT BPR FASCIA (TO PUSH-PIN) (8.153)	97	Y	6	14093088
	4-B15	7.831	RETAINER, FRT BPR FASCIA (TO PUSH-PIN) (8.153)	98-00	Y	4	14093088
40.	4-B15	7.831	REINFORCEMENT, FRT BPR FASCIA (FASCIA TO FDR, FASCIA SI)	97-00	Y	LH	10256969
41.	4-N14	4.665	DUCT, FRT BRK CLPR CLG (POSN #1)	97-00	Y	LH	10295976
	4-N14	4.665	DUCT, FRT BRK CLPR CLG (POSN #2)	97-00	Y	RH	10295977
42.		8.977	BOLT, HWH, M4.2X1.41X20, 7.8 OD, ST, 6172M, ZN BR, TAP, DRILL PT (FRT BPR FASCIA) (TO W/H) (POSN #2)	97		6	11513568
		8.977	BOLT-HEX W/ WASHER, 4.2X1.41X25, 17 OD, 6010M, NO (FRT BPR FASCIA) (TO W/H)	98-00		6	11515429
43.		8.921	NUT-U SHAPE (M6X1, 1060 PEOR) MULIT-THREAD SPRING (FRT BPR OTR VAL PNL)	97		6	11518121
		8.921	NUT, U-TYPE, M4.2X1.41X10.5.5X22, 15 C/E, .65-3.8 PNL THK, 1050, ZF (FRT BPR OTR VAL PNL)	98-00		6	11515638
44.		8.921	NUT-U SHAPE (M6X1, 1060 PEOR) MULIT-THREAD SPRING (FRT BPR FASCIA TO CLOSEOUT) (POSN #1)	97		4	11518121
		8.921	NUT, U TYPE, MULTI THD, PREV TORQ, M4.2X1.41TAP, 8.1REACH, 0.65-3.80 PNLS 1065 PZOR (FRT BPR FASCIA TO W/H) (POSN #2) (AC-DELCO #11513599)	97		6	11513599
		8.921	NUT, U-TYPE, M4.2X1.41X10.5.5X22, 15 C/E, .65-3.8 PNL THK, 1050, ZF (FRT BPR FASCIA) (3 NUTS TO VERTICAL FLANGE OF FASCIA ASM; 2 NUTS TO LWR FLANGE OF FASCIA ASM) (EACH SIDE)	98-00		10	11515638

cardiagn.com

							1Y07-028
45.	4-B16	7.833	RETAINER, FRT CTR A/DFL (PART OF 29)	97-00	Y	4	10400760
46.		8.900	BOLT, M6X1X25, 22.5 THD, 17 OD, 9.8, NO (LWR CLOSEOUT TO W/H)	97		4	11515587
		8.977	BOLT-HEX W/ WASHER, 4.2X1.41X25, 17 OD, 6010M, NO (FRT BPR OTR RR FIL)	98-00		4	11515429
47.		8.900	BOLT, W/WA (M6X1X25) (FRT BPR FASCIA)	97-00		4	11514139
48.	4-M14	1.263	PANEL, F/END LWR OTR (LWR CLOSEOUT)	97-00	Y	LH	10275465
	4-M14	1.263	PANEL, F/END LWR OTR (LWR CLOSEOUT)	97-00	Y	RH	10275466
49.		8.921	NUT-U SHAPE (M6X1, 1060 PEOR) MULIT-THREAD SPRING (FRT BPR OTR RR FIL) (LWR CLOSEOUT TO W/H)	97		4	11518121
		8.921	NUT, U-TYPE, M4.2X1.41X10.5.5X22, 15 C/E, .65-3.8 PNL THK, 1050, ZF (FRT BPR OTR RR FIL) (LWR CLOSEOUT TO W/H)	98-00		4	11515638
50.	4-B15	7.831	FASCIA, FRT BPR (RIM) (PAINT TO MATCH)	97-00	Y	1	10433080
51.	4-B15	7.831	BOLT, FRT BPR FASCIA (TO ENGY ABS FOAM SCREW) (POSN #3)	97-00	Y	2	25631448
52.	4-B15	7.831	REINFORCEMENT, FRT BPR FASCIA (FASCIA TO FDR, FASCIA SI)	97-00	Y	RH	10256970
53.	4-B15	7.800	ATTACHMENT KIT, FRT LIC PLT MT TR CVR (INCLS 54, 61) (PAINT TO MATCH)	97-00	Y	1	10288540
54.		8.906	SCREW, RD WA HD, 4.2X1.41X16, NIOR, GM6138M (FRT LIC PLT) (PART OF 53)	97-00		2	11515498
55.	4-B16	7.832	EMBLEM, FRT BPR FASCIA	97-00	Y	1	10258164
56.	4-B16	7.833	PANEL, FRT BPR OTR VAL	97-00	Y	RH	10419313
57.	4-B16	7.833	PANEL, FRT BPR OTR VAL	97-00	Y	LH	10419312
58.		8.900	BOLT, HEX W/FLAT WA, M6X1X30, 17MMOD, 5MM DOG PT, 500M (9.8) 7111M (FRT BPR VAL OTR PNL)	97-00		6	11515905
59.		8.900	SCREW, HEX M6X1X25 W/CON WA 9.8 POR (FRT BPR FASCIA)	97-00		2	11503982
60.	4-B15	7.831	PLATE, FRT BPR FASCIA BRKT STUD	97-98	Y	2	10403392
		N.S.	PLATE, FRT BPR FASCIA BRKT STUD	99-00			
61.		N.S.	PLATE, FRT LIC PLT NA (PART OF 53)				
62.	4-B15	7.800	FRAME, FRT LIC PLT	97-00	Y	1	10288541
63.		N.S.	BRACKET, FRT LIC PLT (PART OF 66)				
64.		8.906	SCREW, RD WA HD, 4.2X1.41X16, NIOR, GM6138M (FRT LIC PLT) (PART OF 66)	97-00		2	11515498

cardiagn.com

							1Y07-028
65.		8.977	SCREW, TRUSS HD SLOTTED TAPPING (6.3X1.81X16) (FRT LIC PLT) (PART OF 66)	97-00		2	9423101
66.	4-B15	7.800	FRAME, FRT LIC PLT (INCLS 63, 64, 65)	97-00	Y	1	10288544
67.	4-B16	7.833	NUT, FRT A/DFL BR (4.665)	97-00	Y	2	10281487
68.	4-B16	7.833	BRACE, FRT A/DFL	97-00	Y	2	10298293
69.		8.900	BOLT, W/WA (M6X1X25) (FRT A/DFL BR)	97-00		2	11514139
70.		8.921	NUT-U SHAPE (M6X1, 1060 PEOR) MULIT-THREAD SPRING (FRT BPR VAL PNL OTR BRKT)	97		2	11518121
		8.921	NUT, U-TYPE, M4.2X1.41X10.5.5X22, 15 C/E, .65-3.8 PNL THK, 1050, ZF (FRT BPR VAL PNL OTR BRKT)	98-00		2	11515638
71.		8.921	NUT, U-TYPE, M4.2X1.41X10.5.5X22, 15 C/E, .65-3.8 PNL THK, 1050, ZF (RAD SUPT) (AT SKID BAR BRKT-PUSH ON)	97-00		2	11515638

RPO DEFINITIONS
T96 – LAMP,FRONT FOG
V76 – HOOK,FRONT TOW

cardiagn.com

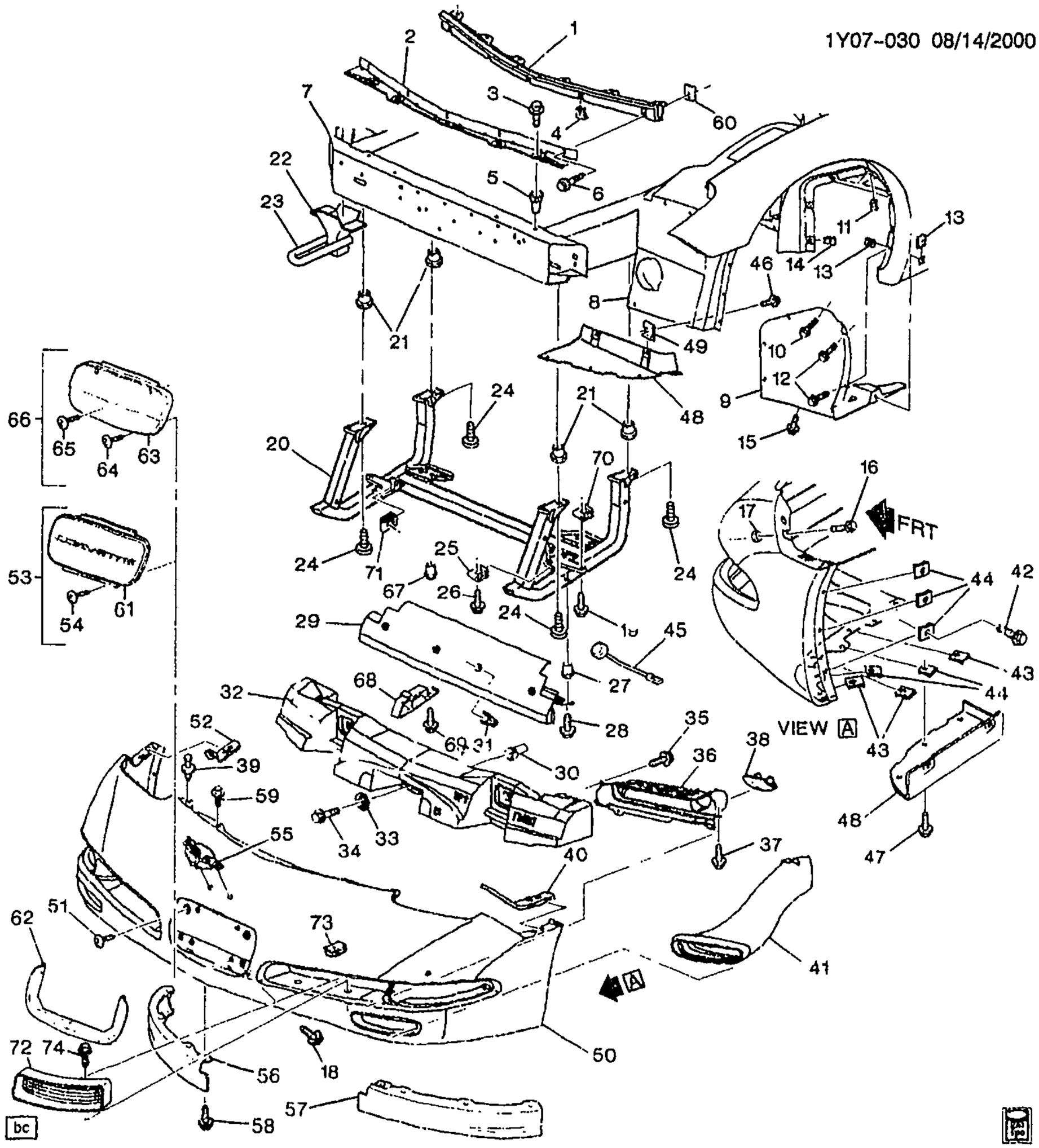

1Y07-030

2001-2002 Y BUMPER/FRONT

1.	4-B15	7.831	RETAINER, FRT BPR FASCIA (TO BRKT)	01-02	Y	1	10256973
2.	4-B17	7.869	BRACKET, FRT BPR FASCIA (STL HOLDS FASCIA TO BPR BEAM)	01-02	Y	1	10256972

cardiagn.com

							1Y07-030
	4-B17	7.874	BRACKET. FRT BPR FASCIA (STL HOLDS FASCIA TO BPR BEAM) (7.869)	01-02	Y	1	10256972
3.		8.900	BOLT, HEX W/WA (M6X1X20) (BRKT TO BAR)	01-02		4	10077321
4.		8.921	NUT-U SHAPE (M6X1, 1060 PEOR) MULIT-THREAD SPRING (FRT BPR FASCIA RET) (RET TO BRKT) (POSN #2)	01-02		7	11518121
5.	4-B15	7.831	NUT, FRT BPR FASCIA BRKT (BRKT TO BAR) (4.665)	01-02	Y	4	10281487
6.		8.900	BOLT, W/WA (M6X1X25) (FRT BPR FASCIA RET)	01-02		5	11514139
7.	4-B15	7.831	BAR, FRT BPR IMP	01-02	Y	1	12533361
8.	4-C9	8.153	PANEL, FRT W/H	01	Y	LH	10407333
	4-C9	8.153	PANEL, FRT W/H	01	Y	RH	10407334
	4-C9	8.153	PANEL, FRT W/H	02	Y	LH	10319785
	4-C9	8.153	PANEL, FRT W/H	02	Y	RH	10319786
9.	4-C9	8.153	PANEL KIT, FRT W/H (INCLS FRT W/H FIL PNL)	01-02	Y	LH	12455607
	4-C9	8.153	PANEL KIT, FRT W/H (INCLS FRT W/H FIL PNL)	01	Y	RH	12455608
10.		8.900	SCREW, M6X1X30, 11 THD, 12.5 OD, 4.8, 6047M, P-PT (POSN #1)	01-02		8	11508128
11.		8.921	NUT, U-TYPE, M4.2X1.41X10.5.5X22, 15 C/E, .65-3.8 PNL THK, 1050, ZF (POSN #3) (RH ONLY)	01-02		AR	11515638
12.		8.977	BOLT, HWH, M4.2X1.41X20, 7.8 OD, ST, 6172M, ZN BR, TAP, DRILL PT (POSN #2)	01-02		10	11513568
13.		8.921	NUT, U TYPE, MULTI THD, PREV TORQ, M4.2X1.41TAP, 8.1REACH, 0.65-3.80 PNLS 1065 PZOR (POSN #2) (AC-DELCO #11513599)	01-02		6	11513599
14.		8.921	NUT, U-TYPE, M4.2X1.41X10.5.5X22, 15 C/E, .65-3.8 PNL THK, 1050, ZF (FRT W/H FIL PNL) (POSN #1)	01-02		7	11515638
15.		8.977	BOLT, HWH, M4.2X1.41X20, 7 8 OD, ST, 6172M, ZN BR, TAP, DRILL PT (POSN #4)	01-02		10	11513568
16.		N.S.	STUD, FRT BPR FASCIA (NCSI) (PART OF REINF, F/FDR FRT)			1	
17.		8.917	NUT, HEX W/CON WA M6X1X5 5. 24-OD 9 PEOR (FRT BPR FASCIA TO FDR) (8.915)	01-02		4	11508388
18.		8.977	BOLT, HWH, M4.2X1.41X20, 7.8 OD, ST, 6172M, ZN BR, TAP, DRILL PT (LWR, AT FASCIA)	01-02		5	11513568
19.		8.977	BOLT-HEX W/ WASHER, 4.2X1.41X25, 17 OD, 6010M, NO (FRT BPR FASCIA SKID PLT)	01-02		2	11515429
20.	4-B16	7.836	PLATE, FRT BPR IMP BAR SKID (MAY NEED NUT 10281493 AND BOLT 11515919)	01-02	Y	1	10400765

cardiagn.com

					1Y07–030		
21.	4–B16	7.836	NUT, FRT BPR IMP BAR SKID PLT (3.015)	01–02	Y	4	10281493
22.		N.S.	BRACKET, FRT TOW HOOK (PART OF 23)				
23.	4–B8	7.068	HOOK, FRT TOW (INCLS 22)	01–02	Y (V76) (EXPORT)	1	10281051
24.		8.900	BOLT–HEX, M8X1.25X30, 22 THD, 24MM OD, 9.8, 7114M (FRT BPR IMP BAR SKID PLT)	01–02		4	11516594
25.		8.921	NUT, U–TYPE, M4.2X1.41X10.5.5X22, 15 C/E, .65–3.8 PNL THK, 1050, ZF (FRT BPR FASCIA LWR DFL BRKT) (TO INBOARD SKID BAR BRKT)	01–02		2	11515638
26.		8.977	BOLT–HEX W/ WASHER, 4.2X1.41X25, 17 OD, 6010M, NO (FRT BPR FASCIA LWR DFL SKID PLT)	01–02		2	11515429
27.	4–B16	7.833	NUT, FRT A/DFL (TO SKID BAR) (4.665)	01–02	Y	2	10281487
28.		8.900	BOLT, HEX W/CON WA, M6X1X20 (FRT A/DFL TO SKID BAR)	01–02		2	11514623
29.	4–M14	1.272	DEFLECTOR, FRT AIR (AIR DAM CTR) (INCLS 31, 45)	01–02	Y	1	10401458
30.	4–B17	7.840	NUT, FRT BPR ENGY ABS (TO IMPACT BAR) (4.665)	01–02	Y	1	10281487
31.	4–B16	7.833	SPRING, FRT A/DFL (PART OF 29)	01–02	Y	2	10401221
	4–M14	1.272	SPRING, FRT A/DFL (PART OF 29) (7.833)	01–02	Y	2	10401221
32.	4–B17	7.840	ABSORBER, FRT BPR FASCIA ENGY (AC–DELCO #10403040) (POLYPROPYLENE FOAM)	01–02	Y	1	10403040
33.	4–B17	7.840	SPACER, FRT BPR FASCIA ENGY ABS (ENERGY ABS TO IMP BAR)	01–02	Y	1	10277215
34.		8.900	BOLT, HEX W/WA, M6X1X40, 9.8, POR, 24 OD, ACPNT (FRT BPR ENGY ABS)	01–02		1	11513677
35.		8.900	SCREW, HWH TAPPING M6.6X1.69X20 6010M BLK ZINC (F/END FASCIA DFL)	01–02		4	20007394
36.	4–B16	7.833	DEFLECTOR, F/END FASCIA	01–02	Y07–67 (EXC V76)	LH	10283575
	4–B16	7.833	DEFLECTOR, F/END FASCIA	01–02	Y07–67 (EXC V76)	RH	10283576
	4–B16	7.833	DEFLECTOR, F/END FASCIA	01–02	Y07–67 (V76) (EXPORT)	RH	10290249
	4–B16	7.833	DEFLECTOR, F/END FASCIA	01–02	Y07–67 (V76) (EXPORT)	LH	10291801
37.		8.977	BOLT, HEX W/LG FL WA M4.2X1.41X16 TAP POR (SHARK CAGE TO FASCIA)	01–02		2	11515730
38.	4–M14	1.263	FILLER, F/END FASCIA	01–02	Y (EXC T96)	LH	10283577
	4–M14	1.263	FILLER, F/END FASCIA	01–02	Y (EXC T96)	RH	10283578
39.	4–B15	7.831	RETAINER, FRT BPR FASCIA (TO PUSH–PIN) (8.153)	01–02	Y	4	14093088
40.	4–B15	7.831	REINFORCEMENT, FRT BPR FASCIA (FASCIA TO FDR, FASCIA SI)	01–02	Y	LH	10256969

cardiagn.com

41.	4-N14	4.665	DUCT, FRT BRK CLPR CLG (POSN #1)	01-02	Y	LH	10295976
	4-N14	4.665	DUCT, FRT BRK CLPR CLG (POSN #2)	01-02	Y	RH	10295977
42.		8.977	BOLT-HEX W/ WASHER, 4.2X1.41X25, 17 OD, 6010M, NO (FRT BPR FASCIA) (TO W/H)	01-02		6	11515429
43.		8.921	NUT, U-TYPE, M4.2X1.41X10.5.5X22, 15 C/E, .65-3.8 PNL THK, 1050, ZF (FRT BPR OTR VAL PNL)	01-02		6	11515638
44.		8.921	NUT, U-TYPE, M4.2X1.41X10.5.5X22, 15 C/E, .65-3.8 PNL THK, 1050, ZF (FRT BPR FASCIA) (3 NUTS TO VERTICAL FLANGE OF FASCIA ASM; 2 NUTS TO LWR FLANGE OF FASCIA ASM) (EACH SIDE)	01-02		10	11515638
45.	4-B16	7.833	RETAINER, FRT CTR A/DFL (PART OF 29)	01-02	Y	4	10400760
46.		8.977	BOLT-HEX W/ WASHER, 4.2X1.41X25, 17 OD, 6010M, NO (FRT BPR OTR RR FIL)	01-02		4	11515429
47.		8.900	BOLT, W/WA (M6X1X25) (FRT BPR FASCIA)	01-02		4	11514139
48.	4-M14	1.263	PANEL, F/END LWR OTR (LWR CLOSEOUT)	01-02	Y	LH	10275465
	4-M14	1.263	PANEL, F/END LWR OTR (LWR CLOSEOUT)	01-02	Y	RH	10275466
49.		8.921	NUT, U-TYPE, M4.2X1.41X10.5.5X22, 15 C/E, .65-3.8 PNL THK, 1050, ZF (FRT BPR OTR RR FIL) (LWR CLOSEOUT TO W/H)	01-02		4	11515638
50.	4-B15	7.831	FASCIA, FRT BPR (RIM) (PAINT TO MATCH)	01-02	Y	1	10433080
51.	4-B15	7.831	BOLT, FRT BPR FASCIA (TO ENGY ABS FOAM SCREW) (POSN #3)	01-02	Y	2	25631448
52.	4-B15	7.831	REINFORCEMENT, FRT BPR FASCIA (FASCIA TO FDR, FASCIA SI)	01-02	Y	RH	10256970
53.	4-B15	7.800	ATTACHMENT KIT, FRT LIC PLT MT TR CVR (INCLS 54, 61) (PAINT TO MATCH)	01-02	Y	1	10288540
54.		8.906	SCREW, RD WA HD, 4.2X1.41X16, NIOR, GM6138M (FRT LIC PLT) (PART OF 53)	01-02		2	11515498
55.	4-B16	7.832	EMBLEM, FRT BPR FASCIA	01-02	Y	1	10258164
56.	4-B16	7.833	PANEL, FRT BPR OTR VAL	01-02	Y	RH	10419313
57.	4-B16	7.833	PANEL, FRT BPR OTR VAL	01-02	Y	LH	10419312
58.		8.900	BOLT, HEX W/FLAT WA, M6X1X30, 17MMOD, 5MM DOG PT, 500M (9.8) 7111M (FRT BPR VAL OTR PNL)	01-02		6	11515905
59.		8.900	SCREW, HEX M6X1X25 W/CON WA 9.8 POR (FRT BPR FASCIA)	01-02		2	11503982

cardiagn.com

							1Y07-030
60.		N.S.	PLATE, FRT BPR FASCIA BRKT STUD	01-02			
61.		N.S.	PLATE, FRT LIC PLT NA (PART OF 53)	01-02			
62.	4-B15	7.800	FRAME, FRT LIC PLT	01-02	Y	1	10288541
63.		N.S.	BRACKET, FRT LIC PLT (PART OF 66)	01-02			
64.		8.906	SCREW, RD WA HD, 4.2X1.41X16, NIOR, GM6138M (FRT LIC PLT) (PART OF 66)	01-02		2	11515498
65.		8.977	SCREW, TRUSS HD SLOTTED TAPPING (6.3X1.81X16) (FRT LIC PLT) (PART OF 66)	01-02		2	9423101
66.	4-B15	7.800	FRAME, FRT LIC PLT (INCLS 63, 64, 65)	01-02	Y	1	10288544
67.	4-B16	7.833	NUT, FRT A/DFL BR (4.665)	01-02	Y	2	10281487
68.	4-B16	7.833	BRACE, FRT A/DFL	01-02	Y	2	10298293
69.		8.900	BOLT, W/WA (M6X1X25) (FRT A/DFL BR)	01-02		2	11514139
70.		8.921	NUT, U-TYPE, M4.2X1.41X10.5.5X22, 15 C/E, .65-3.8 PNL THK, 1050, ZF (FRT BPR VAL PNL OTR BRKT)	01-02		2	11515638
71.		8.921	NUT, U-TYPE, M4.2X1 41X10.5.5X22, 15 C/E, .65-3.8 PNL THK, 1050, ZF (RAD SUPT) (AT SKID BAR BRKT-PUSH ON)	01-02		2	11515638
72.	4-M14	1.266	GRILLE, RAD LWR (W/SCREEN)	01-02	Y37	RH	10424820
	4-M14	1.266	GRILLE, RAD LWR (W/SCREEN)	01-02	Y37	LH	10424821
73.	4-M14	1.269	RETAINER, RAD LWR GRL (3.015)	01	Y37	4	10224748
	4-M14	1.269	RETAINER, RAD LWR GRL (12.269)	01-02	Y37	4	10427824
74.		8.977	BOLT-HEX W/ WASHER, 4.2X1.41X25, 17 OD, 6010M, NO (RAD LWR GRL)	01-02		AR	11515429

RPO DEFINITIONS
T96 - LAMP,FRONT FOG
V76 - HOOK,FRONT TOW

cardiagn.com

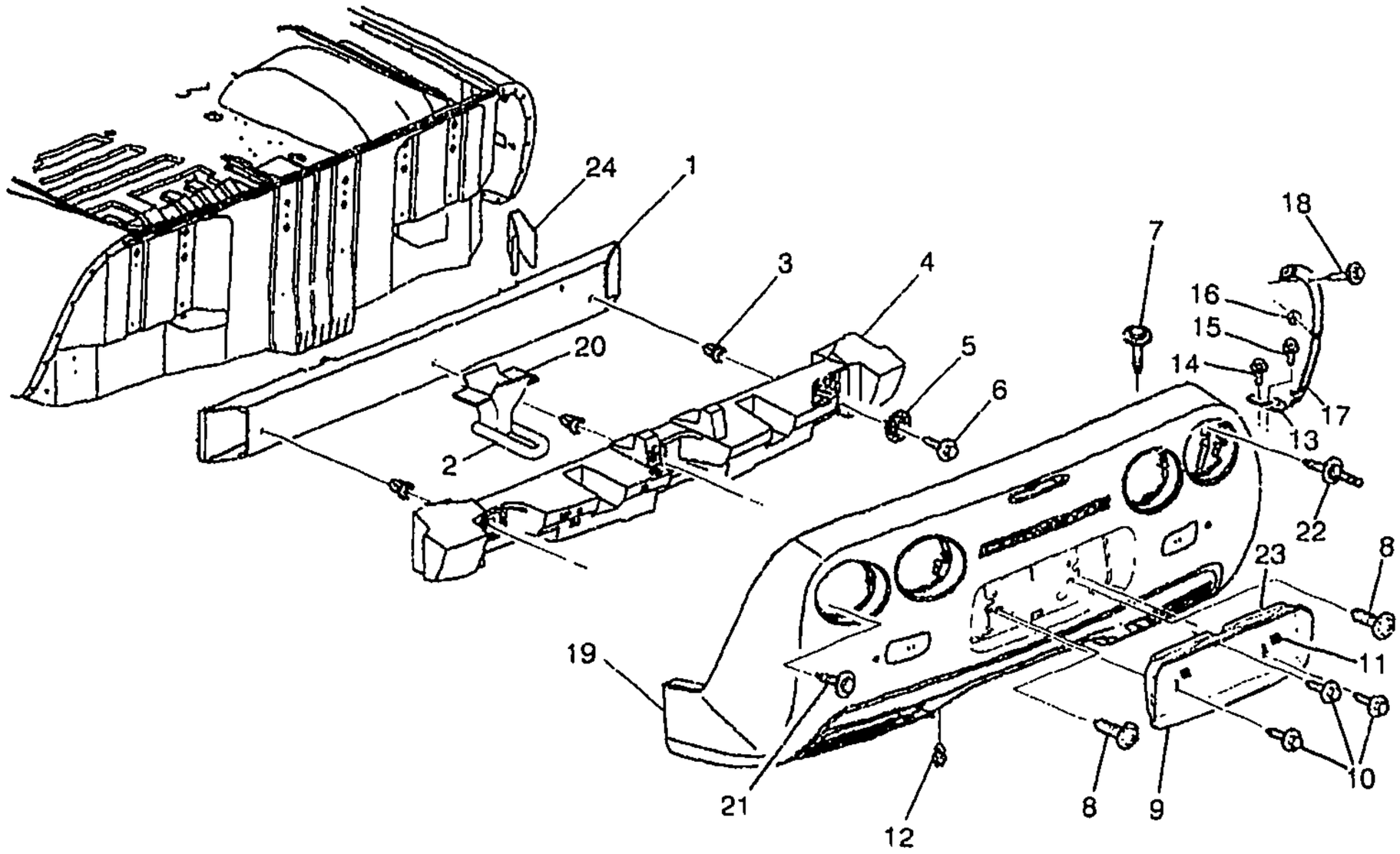

yv

1Y07-029

1997-2002 Y BUMPER/REAR

1.	4-B15	7.831	BAR, RR BPR IMP	97-02	Y	1	12533362
2.	4-B8	7.068	HOOK, RR TOW (INCLS 20)	97-02	Y (V76) (EXPORT)	1	10281052
3.	4-B17	7.840	NUT, RR BPR ENGY ABS (TO IMPACT BAR) (4.665)	97-02	Y	3	10281487
4.	4-B17	7.840	ABSORBER, RR BPR FASCIA ENGY (POLYPROPYLENE FOAM) (AC-DELCO #10230344)	97-02	Y	1	10230344
5.	4-B17	7.840	SPACER, RR BPR FASCIA ENGY ABS (ENERGY ABS TO IMP BAR)	97-02	Y	3	10277215
6.		8.900	BOLT, HEX W/WA, M6X1X40, 9.8, POR, 24 OD, ACPNT (RR BPR ENGY ABS)	97-02		3	11513677
7.	4-B15	7.831	BOLT, RR BPR FASCIA (TO SEAL RING) (POSN #1) (8.906)	97-02		6	11516965
8.	4-B15	7.831	BOLT, RR BPR FASCIA (TO ENGY ABS FOAM SCREW)	97-02	Y	2	25631448
9.	4-B15	7.800	FRAME, RR LIC PLT	97-02	Y (EXC VD1, VE1)	1	5978054
10.		8.977	SCREW, PAN HD TORX TAP M4.2X1.41X16 SS BLK 7.5 OD (RR LIC PLT BRKT)	97-02		3	11508879
		8.977	SCREW, TRUSS HD SLOTTED TAPPING (6.3X1.81X16) (RR LIC PLT)	97-02		2	9423101

cardiagn.com

							1Y07-029
11.		8.921	NUT, .380 SQ HOLE.250 HD.625 SQ NYLON (RR LIC PLT BRKT) (PART OF 23)	97-02		2	3907444
12.	4-B15	7.831	RETAINER, RR BPR FASCIA (PUSH IN) (TO IMPACT BAR) (22.5MM LG) (1.269)	97-02	Y	4	5973400
13.	4-B15	7.831	RETAINER, RR BPR FASCIA LWR (FASCIA OTR TO QTR SI LWR) (INCLS 14)	97-02	Y	2	10276529
14.		8.900	BOLT/SCREW, HEX W/FL WA 17 OD, M6X1X20, 9.8, 4345M, DOG PT (PART OF 13)	97-02		2	11515704
15.		8.900	BOLT, W/WA (M6X1X25) (QTR TO FASCIA)	97-02		4	11514139
16.		8.917	NUT, HEX W/COIN WA 6X1X5.5 16-OD ZP 9 (RR BPR FASCIA)	97-02		4	11517293
17.	4-B15	7.831	RETAINER, RR BPR FASCIA OTR (FASCIA TO QTR)	97-02	Y	LH	10257149
	4-B15	7.831	RETAINER, RR BPR FASCIA OTR (FASCIA TO QTR)	97-02	Y	RH	10257150
18.		8.900	BOLT, HEX W/FL WA, M6X1X25, AC PT, PZOR (TO UPR FASCIA TO RR QTR) (POSN #2)	97-02		4	11515139
19.	4-B15	7.831	FASCIA, RR BPR (PAINT TO MATCH)	97-02	Y	1	10433081
20.		N.S.	BRACKET, RR TOW (PART OF 2)				
21.		8.900	BOLT, W/WA (M6X1X25) (RR BPR FASCIA)	97-02	Y07	4	11514139
		8.900	BOLT, W/WA (M6X1X25) (RR BPR FASCIA)	97-02	Y37-67	3	11514139
22.		8.900	BOLT/SCREW, HEX W/FL WA 17 OD, M6X1X20, 9.8, 4345M, DOG PT (RR BPR FASCIA)	97-02		1	11515704
23.	4-B15	7.800	BRACKET, RR LIC PLT (ECE EXP) (INCLS 11)	97-02	Y (VD1) (EXPORT)	1	10257158
24.	4-N21	12.986	BRACE, R/CMPT PNL (127.9X126.3X66.5)	97-02	Y	LH	10263983
	4-N21	12.986	BRACE, R/CMPT PNL (127.9X126.3X73.1)	97-02	Y	RH	10299078
	4-N21	12.986	BRACE, R/CMPT PNL (57.0X70.0X147.0)	99-02	Y	2	10424152

RPO DEFINITIONS
VD1 -- PROVISION OPTIONS,EUROPE(EXPORT)
VE1 - PROVISION OPTIONS,JAPAN(EXPORT)
V76 - HOOK,FRONT TOW

cardiagn.com

ILLUSTRATION INDEX

	TITLE	GRID
1997–1998	Y SHEET METAL/FRONT END (HOOD,FENDER & RELATED PARTS)	4–H4
1999–2002	Y SHEET METAL/FRONT END (HOOD,FENDER & RELATED PARTS)	4–H9
1997	Y LABELS	4–H14
1998	Y LABELS	4–H16
1999–2002	Y LABELS	4–H18
1997–2002	Y HOSES & PIPES/HEATER	4–H21

cardiagn.com

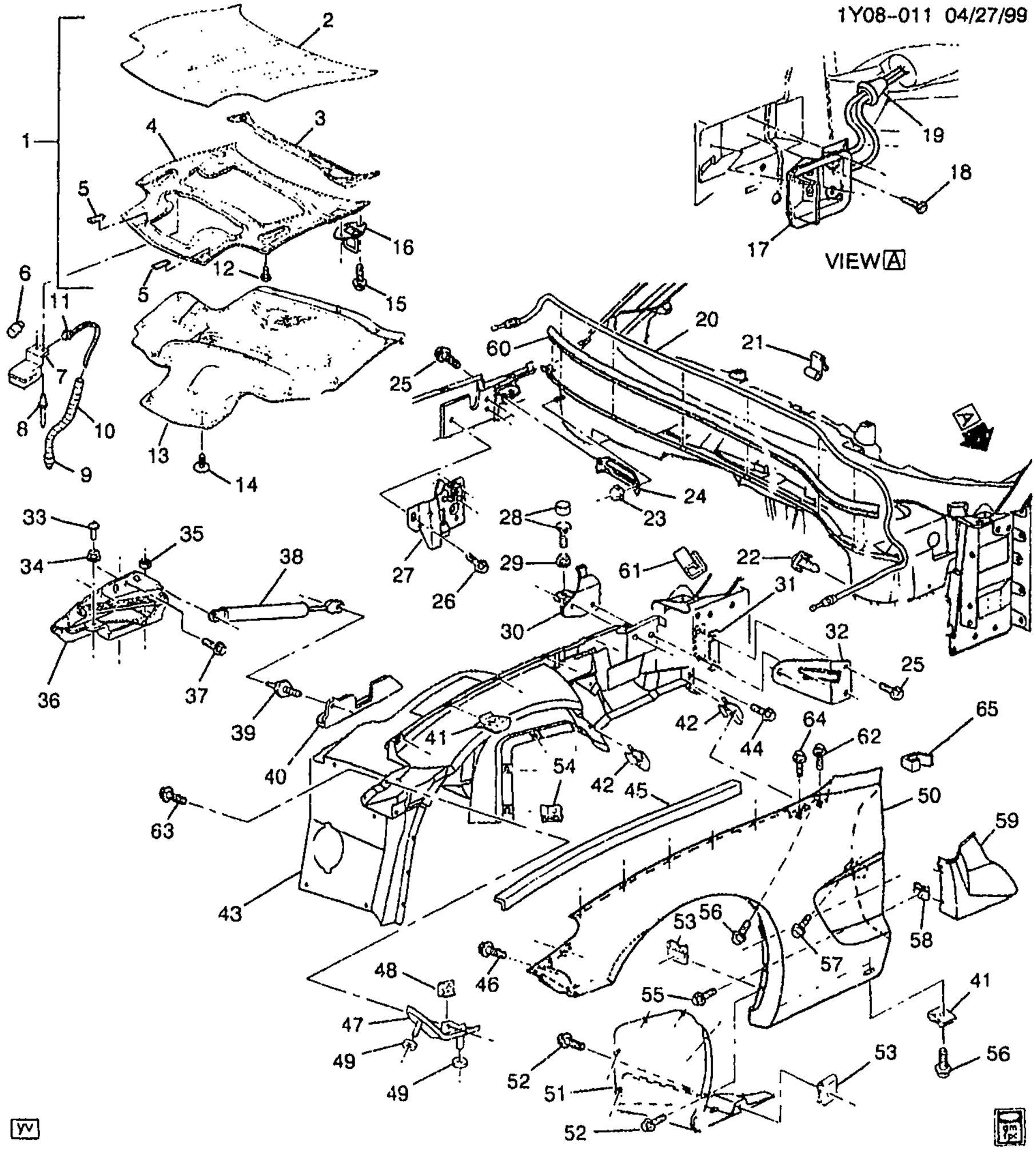

1997-1998 Y SHEET METAL/FRONT END (HOOD,FENDER & RELATED PARTS)

1.	4-C7	8.000	HOOD, (TRADITIONAL HD & FRT HGED) (INCLS 2-5)	97-98 Y	1	10246445
2.		N.S.	PANEL, HOOD OTR (PART OF 1)	.....		
3.		N.S.	REINFORCEMENT, HOOD INR PNL RR (PART OF 1)	.....		
4.		N.S.	PANEL, HOOD INR (PART OF 1) .	.....		

cardiagn.com

5.		N.S.	REINFORCEMENT, HOOD INR PNL FRT (PART OF 1)				
6.		8.991	BULB, 12CP ID 561 (PART OF 7) (AC-DELCO #L561)	97-98	Y	1	9433040
7.	4-C13	8.890	LAMP, U/HOOD (INCLS 6)	97-98	Y	1	25536936
8.		8.967	RIVET, BLIND LG HD, .125-.187 GRIP (U/HOOD LP)	97-98	Y	2	9432552
9.	4-N6	2.530	CONNECTOR, INLINE-TO FWD LP HARN (PART OF 10) (BLACK) (2-WAY F W/LEADS) (3.670) (AC-DELCO #PT374)	97-98	Y	1	12102747
10.	4-C13	8.890	HARNESS, U/HOOD LP WRG (INCLS 9, 11)	97-98	Y	1	12163775
11.	4-C13	8.890	CONNECTOR, LP-U/HOOD (PART OF 10) (BLACK) (2-WAY F W/LEADS) (2.383) (AC-DELCO #PT169)	97-98	Y	1	12101899
12.	4-C7	8.024	BUMPER, HOOD SI (12.2MM) (12.212)	97-98	Y	2	12337963
13.	4-C7	8.021	INSULATOR, HOOD	97-98	Y	1	10285631
14.		8.950	RETAINER, PUSH-IN 0.35-LEN 0.25 HOLE DIA 2.0 HD DIA PLASTIC (HOOD INSL) (8.021)	97-98	Y	15	20064875
15.		8.900	BOLT/SCREW, HEX W/FL WA 17 OD, M6X1X20, 9.8, 1045M, DOG PT (HOOD PRIM LAT STKR)	97-98	Y	4	11515704
16.	4-C8	8.080	STRIKER, HOOD PRIM LAT (TRAD HD-FRT HGE)	97-98	Y	2	10273708
17.		N.S.	HANDLE, HOOD PRIM LAT REL CBL (PART OF 20)				
18.		8.977	SCREW-ROUNDWASHER M4.2X1.4X13, 8.63OD, 6010M, 6138M, C/R, TAP (HOOD PRIM LAT REL CBL)	97-98	Y	3	11515893
19.		N.S.	GROMMET, HOOD PRIM LAT REL CBL (PART OF 20)				
20.	4-C8	8.075	CABLE, HOOD PRIM LAT REL (INCLS 17, 19, 21)	97-98	Y	1	10411704
21.		N.S.	CLIP, HOOD PRIM LAT REL CBL (PART OF 20)				
22.	4-C8	8.075	CLIP, HOOD PRIM LAT REL CBL (TO W/H) (USE W/NYL STEEL HARN) (8.077)	97-98	Y	1	10223661
23.		8.917	NUT, HEX W/CON WA 6X1X5 5 16-OD ZP 9 (FRT W/H PNL BRKT)	97-98	Y	1	11517293
24.	4-C9	8.155	BRACKET, FRT W/H PNL	97-98	Y	1	10409585
25.		8.900	BOLT, M8X1.25X30, 25THD, 23.75OD, 9.8PE (HOOD STOP)	97-98	Y	8	11514634
26.	4-C8	8.080	BOLT, HOOD PRIM LAT	07-98	Y	6	10287379
27.	4-C8	8.080	LATCH, HOOD PRIM	97-98	Y	LH	10445406
	4-C8	8.080	LATCH, HOOD PRIM	97-98	Y	RH	10445407
28.	4-C7	8.024	BUMPER, HOOD ADJ FRT	97-98	Y	2	14069250
	4-C7	8.024	STUD, HOOD ADJ FRT BPR (25MM O.D.) (INCLS NUT)	97-98	Y	2	25526456
29.		8.915	NUT, HEX W/CON WA, M8X1.25, 7.32 THK, 9, ZF (HOOD RR BPR)	97-98		2	11514519
30.	4-C7	8.024	STOP, HOOD	97-98	Y	LH	10408730

cardiagn.com

							1Y08–011
	4–C7	8.024	STOP, HOOD	97–98	Y	RH	10408731
31.	4–C7	8.024	SPACER, HOOD STOP BRKT (.5MM THICK)	97–98	Y	AR	10292119
	4–C7	8.024	SPACER, HOOD STOP BRKT (1MM THICK)	97–98	Y	AR	10292120
	4–C7	8.024	SPACER, HOOD STOP BRKT (2MM THICK)	97–98	Y	AR	10292121
32.	4–C7	8.024	BRACKET, HOOD STOP	97–98	Y	LH	10277923
	4–C7	8.024	BRACKET, HOOD STOP	97–98	Y	RH	10277924
33.	4–C7	8.024	BUMPER, HOOD HGE ADJ (PART OF 36)	97	Y	2	10296641
	4–C7	8.024	BUMPER, HOOD HGE ADJ (PART OF 36)	98	Y	2	10416094
34.		8.917	NUT, HFH M6X1X6.5 ZOR 9 (PART OF 36)	97–98	Y	2	3530297
35.		8.917	NUT, HFH, M8X1.25, 17.9 OD, 738 THK, 13MM HEX, 10, ZF (HOOD HGE) (8.915) (AC–DELCO #11514596)	97–98	Y	4	11514596
36.	4–C7	8.015	HINGE, HOOD (4 BAR LINK STEEL) (INCLS 33–34)	97–98	Y	LH	10425969
	4–C7	8.015	HINGE, HOOD (4 BAR LINK STEEL) (INCLS 33–34)	97–98	Y	RH	10425970
37.		8.900	BOLT, HWH, M8X1.25X32, 22.9 THD, 9.8, PS (HOOD HGE)	97–98	Y	4	12551187
38.	4–C7	8.015	STRUT, HOOD (AC–DELCO #510–379)	97–98	YY	1	88947690
	4–C7	8.015	STRUT, HOOD (TRAD HD–FRT HGE)	97–98	Y	2	10274108
39.	4–C7	8.015	STUD, HOOD STRUT BALL	97–98	Y	2	10285821
40.	4–A7	6.177	BRACKET, FRT SUSP UPR CONT ARM (#21)	97–98	Y	LH	10421762
	4–A7	6.177	BRACKET, FRT SUSP UPR CONT ARM (#21)	97–98	Y	RH	10421763
41.		8.921	NUT, U TYPE, MULTI THD. PREV TORQ, M4.2X1.41TAP, 8.1REACH, 0.65–3.80 PNLS 1065 PZOR (F/FDR) (AC–DELCO #11513599)	97–98		16	11513599
42.		8.921	NUT, U–TYPE, M4.2X1.41X10.5.5X22, 15 C/E, .65–3.8 PNL THK, 1050, ZF (F/FDR)	97–98		4	11515638
43.	4–C9	8.153	PANEL, FRT W/H	97–98	Y	LH	10407333
	4–C9	8.153	PANEL, FRT W/H	97–98	Y	RH	10407334
44.		8.977	BOLT, HWH, M4.2X1.41X20, 7.8 OD, ST, 6172M, ZN BR, TAP, DRILL PT (FRT W/H PNL)	97–98	Y	2	11513568
45.	4–C7	8.010	SEAL, HOOD RR (HOOD SIDE TO FENDER)	97–98	Y	2	10404247
46.		8.977	SCREW, HEX W/FL WA M4.2X2.25X20 TAP POR (F/FDR TO PNL FRT W/H) (POSN #3)	97–98		4	11508443
47.	4–C8	8.141	REINFORCEMENT, F/FDR FRT (FASCIA TO FDR, FDR SI)	97–98	Y	LH	10276555
	4–C8	8.141	REINFORCEMENT, F/FDR FRT (FASCIA TO FDR, FDR SI)	97–98	Y	RH	10276556

cardiagn.com

								1Y08-011
48.		8.921	NUT, U TYPE, MULTI THD, PREV TORQ, M4.2X1.41TAP, 8.1REACH, 0.65-3.80 PNLS 1065 PZOR (F/FDR BRKT) (AC-DELCO #11513599)	97-98			2	11513599
49.		8.921	NUT, PUSH-ON, M6X1, SPR STL, STYLE 1, POR (F/FDR UPR)	97-98			4	14093869
50.	4-C8	8.130	FENDER, FRT (TRADITIONAL HD-FRT & RR HGE)	97-98	Y		LH	10288100
	4-C8	8.130	FENDER, FRT (TRADITIONAL HD-FRT & RR HGE)	97-98	Y		RH	10288101
51.	4-C9	8.153	PANEL KIT, FRT W/H (INCLS FRT W/H FIL PNL)	97-98	Y		LH	12455607
	4-C9	8.153	PANEL KIT, FRT W/H (INCLS FRT W/H FIL PNL)	97-98	Y		RH	12455608
52.		8.977	BOLT, HWH, M4.2X1.41X20, 7.8 OD, ST, 6172M, ZN BR, TAP, DRILL PT (FRT W/H FIL PNL)	97-98			17	11513568
53.		8.921	NUT, U TYPE, MULTI THD, PREV TORQ, M4.2X1.41TAP, 8.1REACH, 0.65-3.80 PNLS 1065 PZOR (FRT W/H FIL PNL) (AC-DELCO #11513599)	97-98	Y		6	11513599
54.		8.921	NUT, U-TYPE, M4.2X1.41X10.5.5X22, 15 C/E, .65-3.8 PNL THK, 1050, ZF (FRT W/H FIL PNL)	97-98	Y		LH	11515638
		8.921	NUT, U-TYPE, M4.2X1.41X10.5.5X22, 15 C/E, .65-3.8 PNL THK, 1050, ZF (FRT W/H FIL PNL)	97-98	Y		RH	11515638
55.		8.977	BOLT, HWH, M4.2X1.41X20, 7.8 OD, ST, 6172M, ZN BR, TAP, DRILL PT	97-98			4	11513568
56.		8.977	BOLT, HWH, M4.2X1.41X20, 7.8 OD, ST, 6172M, ZN BR, TAP, DRILL PT (LWR RR CORNER FLANGE ON FDR TO BOTTOM PNL S/D OPG FIN) (POSN #2)	97-98			6	11513568
57.		8.900	SCREW, M6X1X30, 11 THD, 12.5 OD, 4.8, 6047M, P-PT (F/FDR)	97-98	Y		2	11508128
58.		8.921	NUT, U TYPE, MULTI THD, PREV TORQ, M4.2X1.41TAP, 8.1REACH, 0.65-3.80 PNLS 1065 PZOR (F/FDR INR LWR RR PNL) (AC-DELCO #11513599)	97-98			4	11513599
59.	4-C9	8.153	PANEL, F/FDR INR LWR RR	97-98	Y		LH	10289551
	4-C9	8.153	PANEL, F/FDR INR LWR RR	97-98	Y		RH	10289552
60.	4-C7	8.010	SEAL, HOOD RR (EPDM EXTRUSION, RR)	97-98	Y		1	10270455
61.	4-C8	8.141	RETAINER, F/FDR UPR (TO DR EDGE)	98	Y		2	10412533
		8.921	NUT, PUSH-ON, M6X1, SPR STL, STYLE 1, POR	97			AR	14093869
62.		8.977	SCREW, PAN HD TORX W/FL WA M4.2X1.41X20303 BLK (F/FDR INR UPR PNL)	97-98			2	11508561

cardiagn.com

						1Y08–011	
63.		8.977	SCREW, HEX W/FL WA M4.2X2.25X20 TAP POR (F/FDR BRKT TO W/H PNL REINF)	97–98	.....	2	11508443
64.		8.977	SCREW, PAN HD TORX W/FL WA M4.2X1.41X20303 BLK (F/FDR) (POSN #1)	97–98	.....	12	11508561
65.	4–C8	8.141	RETAINER, F/FDR UPR (TO DR EDGE)	98	Y	2	10412533
		8.921	NUT, PUSH–ON, M6X1, SPR STL, STYLE 1, POR	97	.....	AR	14093869

cardiagn.com

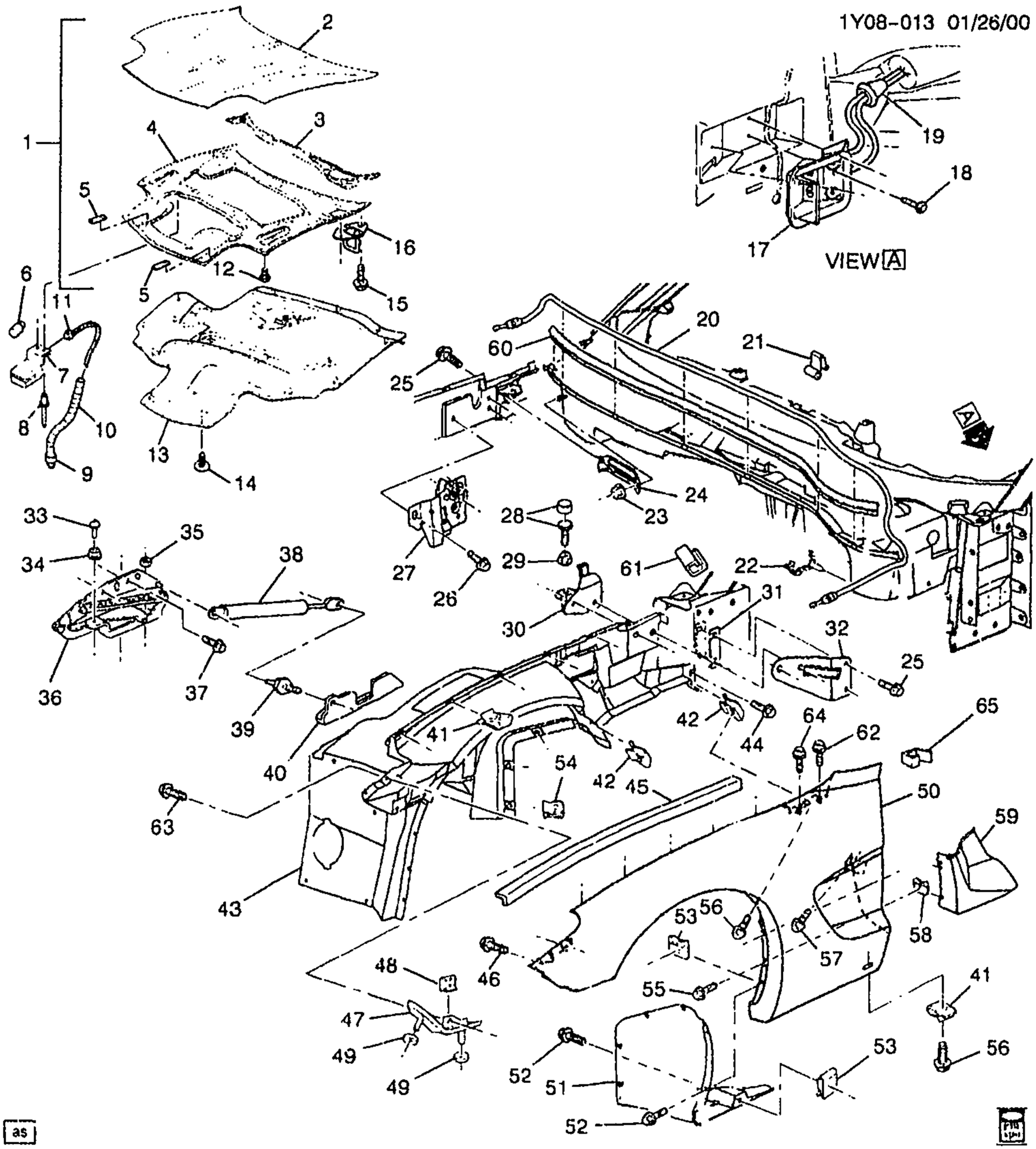

1Y08-013

1999-2002 Y SHEET METAL/FRONT END (HOOD,FENDER & RELATED PARTS)

1.	4-C7	8.000	HOOD, (TRADITIONAL HD & FRT HGED) (INCLS 2-5)	99-02 Y	1	10246445
2.		N.S.	PANEL, HOOD OTR (PART OF 1)	.....		
3.		N.S.	REINFORCEMENT, HOOD INR PNL RR (PART OF 1)	.....		
4.		N.S.	PANEL, HOOD INR (PART OF 1) .	.....		

cardiagn.com

						1Y08-013	
5.		N.S.	REINFORCEMENT, HOOD INR PNL FRT (PART OF 1)				
6.		8.991	BULB, 12CP ID 561 (PART OF 7) (AC-DELCO #L561)	99-02	Y	1	9433040
7.	4-C13	8.890	LAMP, U/HOOD (INCLS 6)	99	Y	1	25536936
	4-C13	8.890	LAMP, U/HOOD (INCLS 6)	00-02	Y	1	10303617
8.		8.967	RIVET, BLIND LG HD, .125-.187 GRIP (U/HOOD LP)	99-02	Y	2	9432552
9.	4-N6	2.530	CONNECTOR, INLINE-TO FWD LP HARN (PART OF 10) (BLACK) (2-WAY F W/LEADS) (3.670) (AC-DELCO #PT374)	99-02	Y	1	12102747
10.	4-C13	8.890	HARNESS, U/HOOD LP WRG (INCLS 9, 11)	99-00	Y07-67	1	12163775
	4-C13	8.890	HARNESS, U/HOOD LP WRG (INCLS 9, 11)	99-00	Y37 (TR9)	1	12163775
	4-C13	8.890	HARNESS, U/HOOD LP WRG (INCLS 9, 11)	01-02	Y	1	12163775
11.	4-C13	8.890	CONNECTOR, LP-U/HOOD (PART OF 10) (BLACK) (2-WAY F W/LEADS) (2.383) (AC-DELCO #PT169)	99-02	Y	1	12101899
12.	4-C7	8.024	BUMPER, HOOD SI (12.2MM) (12.212)	99-02	Y	2	12337963
13.	4-C7	8.021	INSULATOR, HOOD	99-00	Y07-67	1	10285631
	4-C7	8.021	INSULATOR, HOOD	99-00	Y37 (TR9)	1	10285631
	4-C7	8.021	INSULATOR, HOOD	99-00	Y37 (EXC TR9)	1	10401057
	4-C7	8.021	INSULATOR, HOOD	01-02	Y	1	10285631
14.		8.950	RETAINER, PUSH-IN 0.35-LEN 0.25 HOLE DIA 2.0 HD DIA PLASTIC (HOOD INSL) (8 021)	99-02	Y	15	20064875
15.		8.900	BOLT/SCREW, HEX W/FL WA 17 OD, M6X1X20, 9.8, 4345M, DOG PT (HOOD PRIM LAT STKR)	99-02	Y	4	11515704
16.	4-C8	8.080	STRIKER, HOOD PRIM LAT (TRAD HD-FRT HGE)	99-02	Y	2	10273708
17.		N.S.	HANDLE, HOOD PRIM LAT REL CBL (PART OF 20)				
18.		8.977	SCREW-ROUNDWASHER M4.2X1.4X13, 8.63OD, 6010M, 6138M, C/R, TAP (HOOD PRIM LAT REL CBL)	99-02	Y	3	11515893
19.		N.S.	GROMMET, HOOD PRIM LAT REL CBL (PART OF 20)				
20.	4-C8	8.075	CABLE, HOOD PRIM LAT REL (INCLS 17, 19, 21)	99-02	Y	1	10411704
21.		N.S.	CLIP, HOOD PRIM LAT REL CBL (PART OF 20)				
22.	4-C8	8.075	CLIP, HOOD PRIM LAT REL CBL (TO W/H) (X-MAS TREE PUSH IN TYPE) (2.343)	99-02	Y	1	12160858
23.		8.917	NUT, HEX W/CON WA 6X1X5.5 16-OD ZP 9 (FRT W/H PNL BRKT)	99-02	Y	1	11517293
24.	4-C9	8.155	BRACKET, FRT W/H PNL	99-02	Y	1	10409585
25.		8.900	BOLT, M8X1.25X30, 25THD, 23.75OD, 9.8PE (HOOD STOP)	99-02	Y	8	11514634
26.	4-C8	8.080	BOLT, HOOD PRIM LAT	99-02	Y	6	10287379

cardiagn.com

							1Y08-013
27.	4-C8	8.080	LATCH, HOOD PRIM	99-02	Y	LH	10445406
	4-C8	8.080	LATCH, HOOD PRIM	99-02	Y	RH	10445407
28.	4-C7	8.024	BUMPER, HOOD ADJ FRT	99-00	Y	2	14069250
		N.S.	BUMPER, HOOD RR	01-02			
	4-C7	8.024	STUD, HOOD ADJ FRT BPR (25MM O.D.) (INCLS NUT)	99-00	Y	2	25526456
		N.S.	STUD, HOOD ADJ FRT BPR	01-02			
29.		8.915	NUT, HEX W/CON WA, M8X1.25, 7.32 THK, 9, ZF (HOOD RR BPR)	99-02		2	11514519
30.	4-C7	8.024	STOP, HOOD	99-02	Y	LH	10408730
	4-C7	8.024	STOP, HOOD	99-02	Y	RH	10408731
31.	4-C7	8.024	SPACER, HOOD STOP BRKT (.5MM THICK)	99-02	Y	AR	10292119
	4-C7	8.024	SPACER, HOOD STOP BRKT (1MM THICK)	99-02	Y	AR	10292120
	4-C7	8.024	SPACER, HOOD STOP BRKT (2MM THICK)	99-02	Y	AR	10292121
32.	4-C7	8.024	BRACKET, HOOD STOP	99-02	Y	LH	10277923
	4-C7	8.024	BRACKET, HOOD STOP	99-02	Y	RH	10277924
33.	4-C7	8.024	BUMPER, HOOD HGE ADJ (PART OF 36)	99-02	Y	2	10416094
34.		8.917	NUT, HFH M6X1X6.5 ZOR 9 (PART OF 36)	99-02	Y	2	3530297
35.		8.917	NUT, HFH, M8X1.25, 17.9 OD, 738 THK, 13MM HEX, 10, ZF (HOOD HGE) (8.915) (AC-DELCO #11514596)	99-02	Y	4	11514596
36.	4-C7	8.015	HINGE, HOOD (4 BAR LINK STEEL) (INCLS 33-34)	99-02	Y	LH	10425969
	4-C7	8.015	HINGE, HOOD (4 BAR LINK STEEL) (INCLS 33-34)	99-02	Y	RH	10425970
37.		8.900	BOLT, HWH, M8X1.25X32, 22.9 THD, 9.8, PS (HOOD HGE)	99-02	Y	4	12551187
38.	4-C7	8.015	STRUT, HOOD (AC-DELCO #510-379)	99	YY	1	88947690
	4-C7	8.015	STRUT, HOOD (TRAD HD-FRT HGE)	99-02	Y	2	10274108
39.		8.981	STUD-BALL, M8X1.25X13, 33 TL, 4140, 7114M (HOOD STRUT BALL)	99-02		AR	11518272
40.	4-A7	6.177	BRACKET, FRT SUSP UPR CONT ARM (#21)	99-02	Y	LH	10421762
	4-A7	6.177	BRACKET, FRT SUSP UPR CONT ARM (#21)	99-02	Y	RH	10421763
41.		8.921	NUT, U TYPE, MULTI THD, PREV TORQ, M4.2X1.41TAP, 8.1REACH, 0.65-3.80 PNLS 1065 PZOR (F/FDR) (AC-DELCO #11513599)	99-02		16	11513599
42.		8.921	NUT, U-TYPE, M4 2X1.41X10.5.5X22, 1[illegible]/E, .65-3.8 PNL THK, 1050, ZF (F/FDR)	99-02		4	11515638
43.	4-C9	8.153	PANEL, FRT W/H	99-01	Y	LH	10407333
	4-C9	8.153	PANEL, FRT W/H	99-01	Y	RH	10407334
	4-C9	8.153	PANEL, FRT W/H	02	Y	LH	10319785
	4-C9	8.153	PANEL, FRT W/H	02	Y	RH	10319786

cardiagn.com

							1Y08-013
44.		8.977	BOLT, HWH, M4.2X1.41X20, 7.8 OD, ST, 6172M, ZN BR, TAP, DRILL PT (FRT W/H PNL)	99-02	Y	2	11513568
45.	4-C7	8.010	SEAL, HOOD RR (HOOD SIDE TO FENDER)	99-02	Y	2	10404247
46.		8.977	SCREW, HEX W/FL WA M4.2X2.25X20 TAP POR (F/FDR TO PNL FRT W/H) (POSN #3) ...	99-02	.....	4	11508443
47.	4-C8	8.141	REINFORCEMENT, F/FDR FRT (FASCIA TO FDR, FDR SI)	99-02	Y	LH	10276555
	4-C8	8.141	REINFORCEMENT, F/FDR FRT (FASCIA TO FDR, FDR SI)	99-02	Y	RH	10276556
48.		8.921	NUT, U TYPE, MULTI THD, PREV TORQ, M4.2X1.41TAP, 8.1REACH, 0.65-3.80 PNLS 1065 PZOR (F/FDR BRKT) (AC-DELCO #11513599)	99-02	.....	2	11513599
49.		8.921	NUT, PUSH-ON, M6X1, SPR STL, STYLE 1, POR (F/FDR UPR)	99-02	.....	4	14093869
50.	4-C8	8.130	FENDER, FRT (TRADITIONAL HD-FRT & RR HGE)	99-02	Y	LH	10288100
	4-C8	8.130	FENDER, FRT (TRADITIONAL HD-FRT & RR HGE)	99-02	Y	RH	10288101
51.	4-C9	8.153	PANEL KIT, FRT W/H (INCLS FRT W/H FIL PNL)	99-02	Y	LH	12455607
	4-C9	8.153	PANEL KIT, FRT W/H (INCLS FRT W/H FIL PNL)	99-01	Y	RH	12455608
52.		8.977	BOLT, HWH, M4.2X1.41X20, 7.8 OD, ST, 6172M, ZN BR, TAP, DRILL PT (FRT W/H FIL PNL)	99-02	.....	17	11513568
53.		8.921	NUT, U TYPE, MULTI THD, PREV TORQ, M4.2X1.41TAP, 8.1REACH, 0.65-3.80 PNLS 1065 PZOR (FRT W/H FIL PNL) (AC-DELCO #11513599)	99-02	Y	6	11513599
54.		8.921	NUT, U-TYPE, M4.2X1.41X10.5.5X22, 15 C/E, .65-3.8 PNL THK, 1050, ZF (FRT W/H FIL PNL)	99-02	Y	LH	11515638
		8.921	NUT, U-TYPE, M4.2X1.41X10.5.5X22, 15 C/E, .65-3.8 PNL THK, 1050, ZF (FRT W/H FIL PNL)	99-02	Y	RH	11515638
55.		8.977	BOLT, HWH, M4.2X1.41X20, 7.8 OD, ST, 6172M, ZN BR, TAP, DRILL PT	99-02	.....	4	11513568
56.		8.977	BOLT, HWH, M4.2X1.41X20, 7.8 OD, ST, 6172M, ZN BR, TAP, DRILL PT (LWR RR CORNER FLANGE ON FDR TO BOTTOM PNL S/D OPG FIN) (POSN #2) ...	99-02	....	6	11513568
57.		8.900	SCREW, M6X1X30, 11 THD, 12.5 OD, 4 8, 6047M, P-PT (F/FDR) ..	99-02	Y	2	11508128
58.		8.921	NUT, U TYPE, MULTI THD, PREV TORQ, M4.2X1.41TAP, 8.1REACH, 0.65-3.80 PNLS 1065 PZOR (F/FDR INR LWR RR PNL) (AC-DELCO #11513599)	99-02	.....	4	11513599

cardiagn.com

						1Y08-013	
59.	4-C9	8.153	PANEL, F/FDR INR LWR RR	99-02	Y	LH	10289551
	4-C9	8.153	PANEL, F/FDR INR LWR RR	99-02	Y	RH	10289552
60.	4-C7	8.010	SEAL, HOOD RR (EPDM EXTRUSION, RR)	99-02	Y	1	10270455
61.	4-C8	8.141	RETAINER, F/FDR UPR (TO DR EDGE)	99-02	Y	2	10412533
62.		8.977	SCREW, PAN HD TORX W/FL WA M4.2X1.41X20303 BLK (F/FDR INR UPR PNL)	99-02	.....	2	11508561
63.		8.977	SCREW, HEX W/FL WA M4.2X2.25X20 TAP POR (F/FDR BRKT TO W/H PNL REINF)	99-02	.....	2	11508443
64.		8.977	SCREW, PAN HD TORX W/FL WA M4.2X1.41X20303 BLK (F/FDR) (POSN #1)	99-02	.....	12	11508561
65.	4-C8	8.141	RETAINER, F/FDR UPR (TO DR EDGE)	99-02	Y	2	10412533

RPO DEFINITIONS
TR9 – LAMP GROUP,COURTESY

cardiagn.com

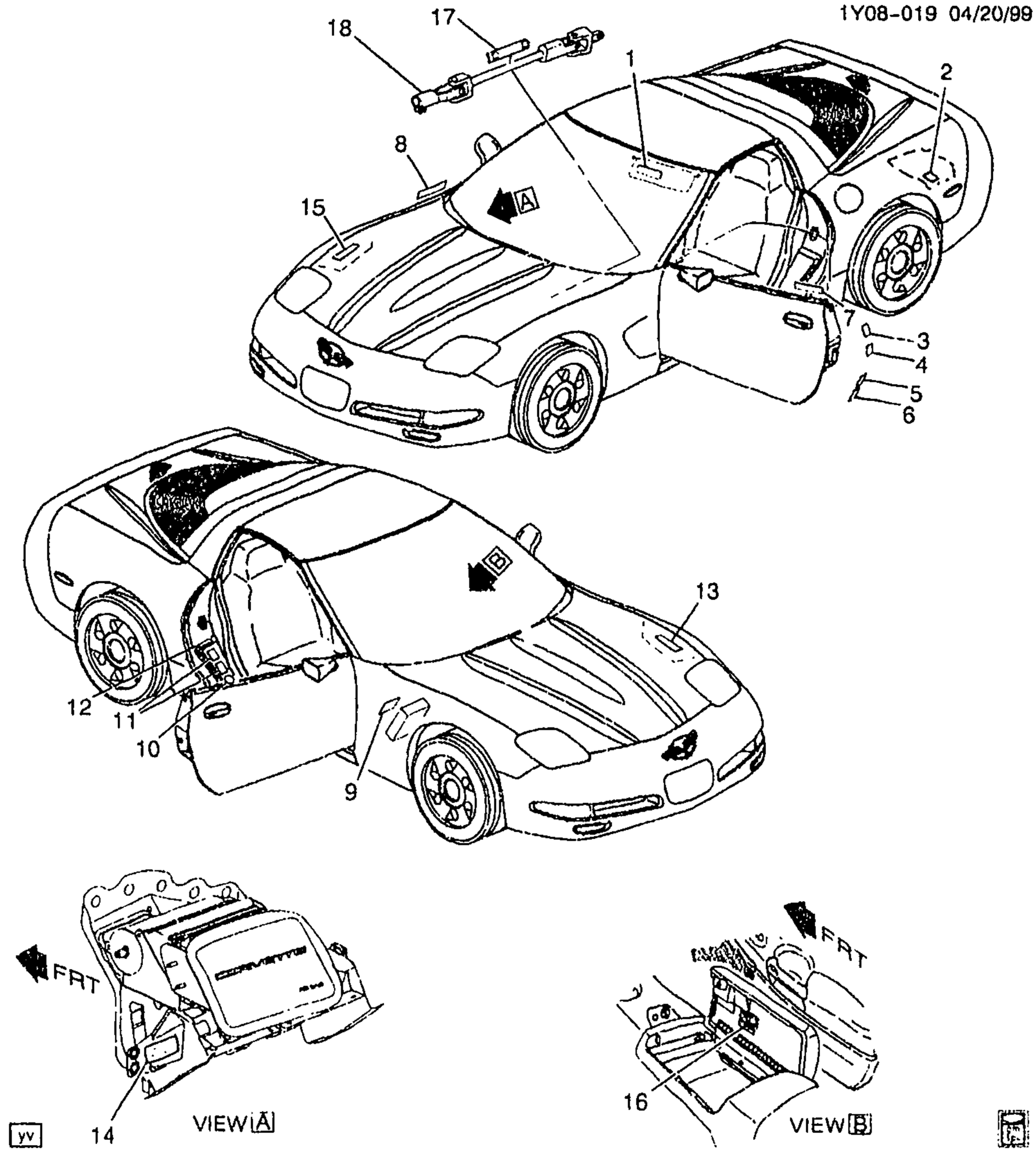

1Y08-019

1997 Y LABELS

1.	4-C9	8.808	LABEL, INFL RST SYS CAUTION (140.0X40.0)	97	Y	2 15001737
2.		N.S.	LABEL, SERV PART IDENT (AVAILABLE THROUGH YOUR DIVISIONAL ZONE OFFICE)	...	.....	

cardiagn.com

							1Y08-019
3.		N.S.	LABEL, VEH CERT (AVAILABLE THROUGH YOUR DIVISIONAL ZONE OFFICE)				
4.		N.S.	LABEL, GVW & RIM & TIRE SIZE INFO (AVAILABLE THROUGH YOUR DIVISIONAL ZONE OFFICE)				
5.		N.S.	LABEL, GULF STATES CERT (AVAILABLE THROUGH YOUR DIVISIONAL ZONE OFFICE)				
6.	4-C9	8.808	LABEL, ODOM SERV NTC (ENGLISH AND FRENCH)	97	Y	AR	10443718
7.		N.S.	LABEL, ROADSIDE SERV INFO (AVAILABLE THROUGH YOUR DIVISIONAL ZONE OFFICE)				
8.		N.S.	LABEL, GOVT VEH DATA				
9.	4-N4	2.483	LABEL, FUSE BLK IDENT	97	Y	1	12176907
10.	4-C9	8.808	LABEL, CHILD ST LOCATION	97	Y (AK5, AX4)	1	10426427
11.		N.S.	LABEL, ECE & VIN (AVAILABLE THROUGH YOUR DIVISIONAL ZONE OFFICE)		(VH5)		
12.		N.S.	LABEL, HDLP ADJ (AVAILABLE THROUGH YOUR DIVISIONAL ZONE OFFICE)		(T90)		
13.	4-C9	8.808	LABEL, VEH EMIS CONT INFO (AKB)	97	Y (LS1, NF2) (EXC K29, NM8, Z49)	1	12558627
	4-C9	8.808	LABEL, VEH EMIS CONT INFO (AKC)	97	Y (LS1, NB6)	1	12558628
	4-C9	8.808	LABEL, VEH EMIS CONT INFO (AKD)	97	Y (LS1, NF2, Z49) (EXC NM8)	1	12558629
14	4-C9	8.808	LABEL, I/P PASS KNEE BOLS PNL IDENT	97	Y	1	10299631
15.	4-C9	8.808	LABEL, FAN BLADE & INFL RST & ENG CLG & A/C REFRIG CAUTION	97	Y	1	10292511
16.		N.S.	LABEL, LOW TIRE PRESS CAUTION				
17.	4-C9	8.808	LABEL, INFL RST SYS SERV NTC	97	Y (AK5)	1	26017956
18.	4-A13	6.524	SHAFT, S/GR CPLG	97	Y	1	26068266

RPO DEFINITIONS

AK5 – RESTRAINT SYSTEM,FRONT SEAT,INFLATABLE,DRIVER AND PASSENGER
AX4 – RESTRAINT SYSTEM,FRONT AND REAR SEAT,MANUAL(EUROPEAN)
K29 – MODULE,POWERTRAIN CONTROL
LS1 – ENGINE GAS, 8 CYL, 5.7L, SFI, ALUMINUM ENGINE
NB6 – EMISSION SYSTEM CALIFORNIA,TIER 1
NF2 – EMISSION SYSTEM,FEDERAL,TIER 1
NM8 – EMISSION SYSTEM,LEADED FUEL(EXPORT)
T90 – LAMP,SIGNALING AND MARKER(EXPORT)
VH5 – PLATE,VEHICLE IDENTIFICATION(EXPORT)
Z49 – MANDATORY CANADIAN BASE EQUIPMENT MODIFICATIONS(CANADIAN)

cardiagn.com

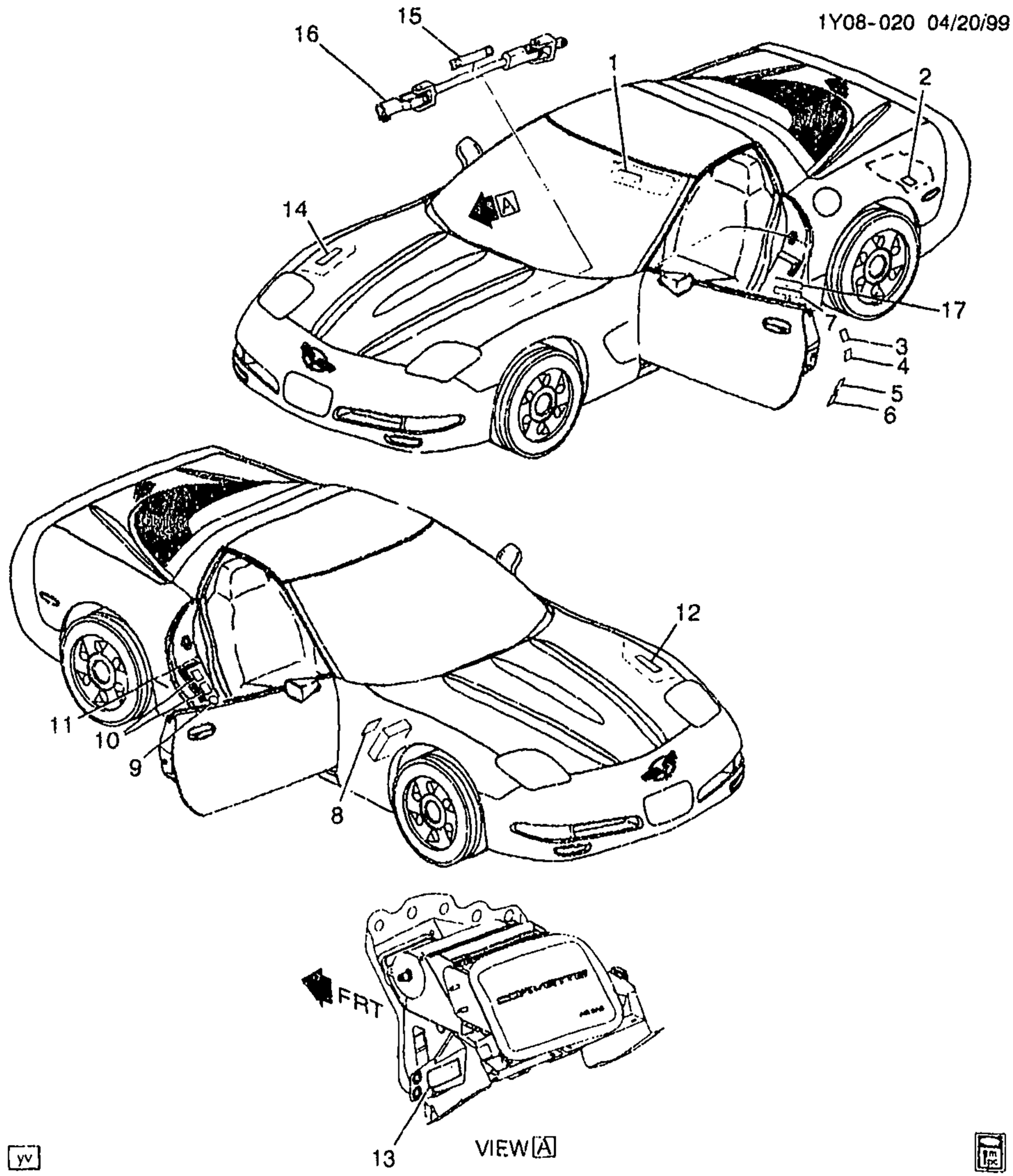

yv

1Y08-020

1998 Y LABELS

1.	4-C9	8.808	LABEL, INFL RST SYS CAUTION (130.0X' '.0)	98	Y07-67 (Z49)	2	10408963
	4-C9	8.808	LABEL, INFL RST SYS CAUTION (140.0X40.0)	98	Y07-67 (EXC Z49)	2	15001737
2.		N.S.	LABEL, SERV PART 'DENT		....		
3.		N.S.	LABEL, VEH CERT		.....		

cardiagn.com

							1Y08-020
4.		N.S.	LABEL, GVW & RIM & TIRE SIZE INFO				
5.		N.S.	LABEL, GULF STATES CERT				
6.	4-C9	8.808	LABEL, ODOM SERV NTC (ENGLISH AND FRENCH)	98	Y	AR	10443718
7.		N.S.	LABEL, ROADSIDE SERV INFO				
8.	4-N4	2.483	LABEL, FUSE BLK IDENT	98	Y	1	12194083
9.	4-C9	8.808	LABEL, CHILD ST LOCATION	98	Y (AK5, AX4)	1	10426427
10.		N.S.	LABEL, ECE & VIN		(VH5)		
11.		N.S.	LABEL, HDLP ADJ		(T90)		
12.	4-C9	8.808	LABEL, VEH EMIS CONT INFO (FJU)	98	Y (LS1, NF2) (EXC NM8, NN5, K29)	1	12559752
	4-C9	8.808	LABEL, VEH EMIS CONT INFO (FNS)	98	Y (LS1, NN5) (EXC K29, NM8, Z49) (EXPORT)	1	12560250
13.	4-C9	8.808	LABEL, I/P PASS KNEE BOLS PNL IDENT	98	Y	1	10299631
14.	4-C9	8.808	LABEL, FAN BLADE & INFL RST & ENG CLG & A/C REFRIG CAUTION	98	Y	1	10292511
15.	4-C9	8.808	LABEL, INFL RST SYS SERV NTC	98	Y (AK5)	1	26017956
16.	4-A13	6.524	SHAFT, S/GR CPLG	98	Y	1	26068266
17.	4-C9	8.808	LABEL, INFL RST SYS SERV NTC	98	Y (AK5)	1	26017956

RPO DEFINITIONS
AK5 – RESTRAINT SYSTEM,FRONT SEAT,INFLATABLE,DRIVER AND PASSENGER
AX4 – RESTRAINT SYSTEM,FRONT AND REAR SEAT,MANUAL(EUROPEAN)
K29 – MODULE,POWERTRAIN CONTROL
LS1 – ENGINE GAS, 8 CYL, 5.7L, SFI, ALUMINUM ENGINE
NF2 – EMISSION SYSTEM,FEDERAL,TIER 1
NM8 – EMISSION SYSTEM,LEADED FUEL(EXPORT)
NN5 – EMISSION OVERIDE,CALIFORNIA SYSTEM,FEDERAL OFFSET VEHICLE
T90 – LAMP,SIGNALING AND MARKER(EXPORT)
VH5 – PLATE,VEHICLE IDENTIFICATION(EXPORT)
Z49 – MANDATORY CANADIAN BASE EQUIPMENT MODIFICATIONS(CANADIAN)

cardiagn.com

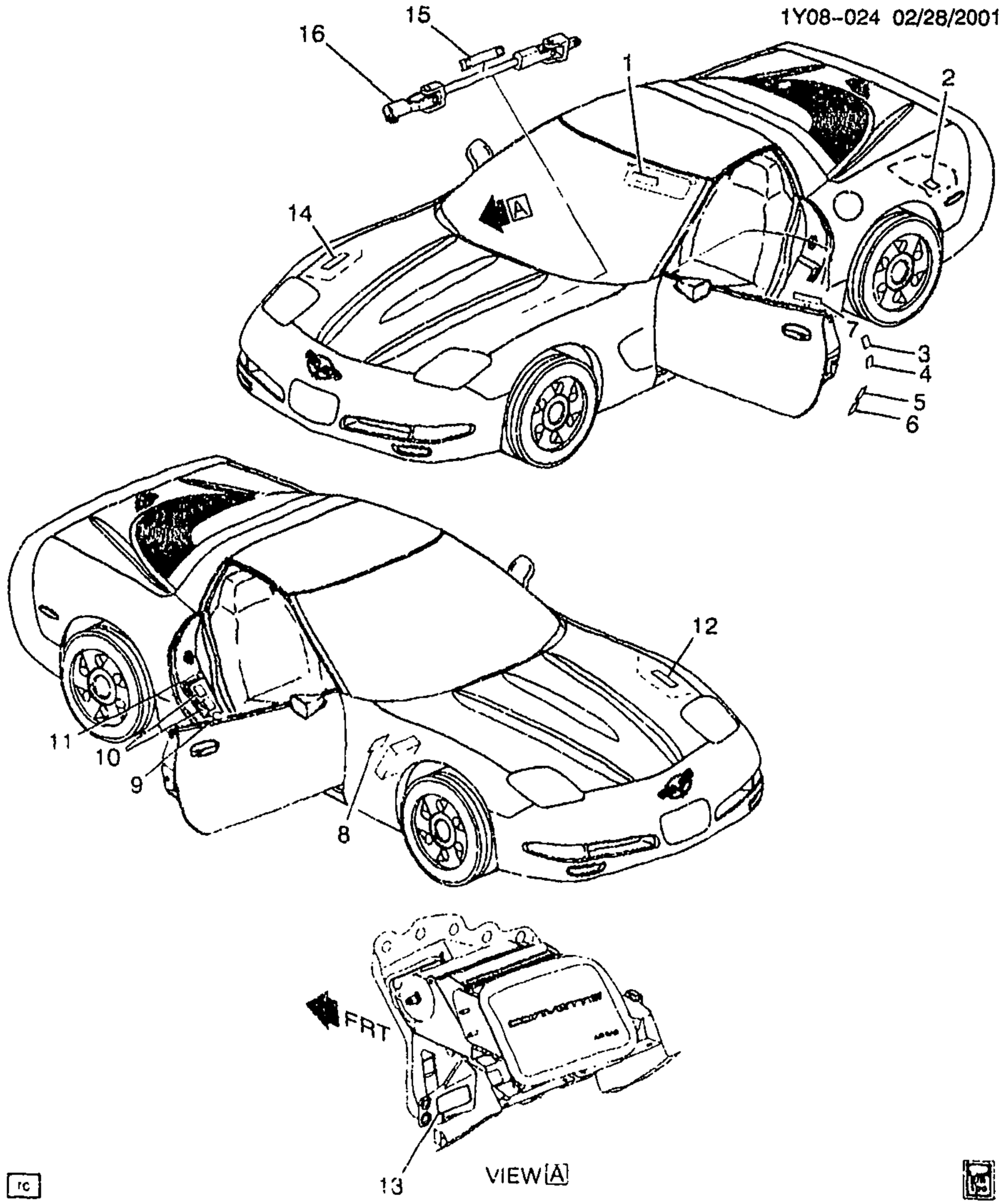

1Y08-024

1999-2002 Y LABELS

1.	4-C9	8.808	LABEL, INFL RST SYS CAUTION (130.0X65.0)	99-00	Y07-67 (Z49)	2	10408963
	4-C9	8.808	LABEL, INFL RST SYS CAUTION (140.0X40.0)	99	Y07-67 (EXC Z49)	2	15001737
	4-C9	8.808	LABEL, INFL RST SYS CAUTION (130.0X65.0)	99-00	Y37 (Z49)	2	10408963

2001 GENERAL MOTORS SERVICE PARTS OPERATIONS - CHEVROLET - 15Y

cardiagn.com

							1Y08-024
	4-C9	8.808	LABEL, INFL RST SYS CAUTION (140.0X40.0)	99	Y37 (EXC Z49)	2	15001737
	4-C9	8.808	LABEL, INFL RST SYS CAUTION	00-02	Y (EXC C88, Z49)	2	15002610
	4-C9	8.808	LABEL, INFL RST SYS CAUTION (140.0X40.0)	00-02	Y07-67 (C88) (EXPORT)	2	15001737
	4-C9	8.808	LABEL, INFL RST SYS CAUTION (ARABIC)	01-02	Y07-67 (VBX) (EXPORT)	2	15749556
2.		N.S.	LABEL, SERV PART IDENT (AVAILABLE THROUGH YOUR DIVISIONAL ZONE OFFICE)				
3.		N.S.	LABEL, VEH CERT (AVAILABLE THROUGH YOUR DIVISIONAL ZONE OFFICE)				
4.		N.S.	LABEL, GVW & RIM & TIRE SIZE INFO (AVAILABLE THROUGH YOUR DIVISIONAL ZONE OFFICE)				
5.		N.S.	LABEL, GULF STATES CERT (AVAILABLE THROUGH YOUR DIVISIONAL ZONE OFFICE)				
6.	4-C9	8.808	LABEL, ODOM SERV NTC (ENGLISH AND FRENCH)	99-02	Y	AR	10443718
7.		N.S.	LABEL, ROADSIDE SERV INFO (AVAILABLE THROUGH YOUR DIVISIONAL ZONE OFFICE)				
8.	4-N4	2.483	LABEL, FUSE BLK IDENT	99-02	Y	1	15319414
9.	4-C9	8.808	LABEL, CHILD ST LOCATION	99-00	Y (AK5 AX4) (EXPORT)	1	10426427
	4-C9	8.808	LABEL, CHILD ST LOCATION	01-02	Y (AK5, VJ4) (EXPORT)	1	10426427
10.		N.S.	LABEL, ECE & VIN (AVAILABLE THROUGH YOUR DIVISIONAL ZONE OFFICE)		(VH5)		
11.		N.S.	LABEL, HDLP ADJ (AVAILABLE THROUGH YOUR DIVISIONAL ZONE OFFICE)		(T90)		
12.	4-C9	8.808	LABEL, VEH EMIS CONT INFO (LAC)	99	Y (LS1, NF2) (EXC K29)	1	12560553
	4-C9	8.808	LABEL, VEH EMIS CONT INFO (LAD)	99	Y (LS1, NB6) (EXC K29, Z49)	1	12560554
	4-C9	8.808	LABEL, VEH EMIS CONT INFO (PAY)	00	Y (LS1, NF2) (EXC K29)	1	12562425
	4-C9	8.808	LABEL, VEH EMIS CONT INFO (PAZ)	00	Y (LS1, NC1) (EXC K29)	1	12562426
	4-C9	8.808	LABEL, VEH EMIS CONT INFO (NYB)	01	Y (LS1)	1	12564047
	4-N14	3.670	LABEL, VEH EMIS CONT INFO (NYB) (8.808)	01	Y (LS1)	1	12564047
	4-C9	8.808	LABEL, VEH EMIS CONT INFO (NYC)	01	Y (LS6)	1	12572217
	4-C9	8.808	LABEL, VEH EMIS CONT INFO (CYA)	02	Y (LS1)	1	12565747
	4-C9	8.808	LABEL, VEH EMIS CONT INFO (CYB)	02	Y (LS6)	1	12570324
13.	4-C9	8.808	LABEL, I/P PASS KNEE BOLS PNL IDENT	99-02	Y	1	10299631
14.	4-C9	8.808	LABEL, FAN BLADE & INFL RST & ENG CLG & A/C REFRIG CAUTION (EVAP TUBE ORIFICE ON FRT TUBE)	00	Y	1	10432250

cardiagn.com

							1Y08-024
	4-C9	8.808	LABEL, FAN BLADE & INFL RST & ENG CLG & A/C REFRIG CAUTION (EVAP TUBE ORIFICE ON FRT TUBE)	01-02	Y	1	10308343
	4-C9	8.808	LABEL, FAN BLADE & INFL RST & ENG CLG & A/C REFRIG CAUTION (1ST DES VEH W/ EVAP TUBE ORIFICE ON RR TUBE; 2ND DES SEE 10432250) .	99	Y (1ST DES)	1	10292511
	4-C9	8.808	LABEL, FAN BLADE & INFL RST & ENG CLG & A/C REFRIG CAUTION (2ND DES VEH W/ EVAP TUBE ORIFICE ON FRT TUBE;1ST DES SEE 10292511) ..	99	Y (2ND DES)	1	10432250
15.	4-C9	8.808	LABEL, INFL RST SYS SERV NTC	99-02	Y (AK5)	1	26017956
16.	4-A13	6.524	SHAFT, S/GR CPLG	99-02	Y	1	26057539

RPO DEFINITIONS
AK5 – RESTRAINT SYSTEM,FRONT SEAT,INFLATABLE,DRIVER AND PASSENGER
AX4 – RESTRAINT SYSTEM,FRONT AND REAR SEAT,MANUAL(EUROPEAN)
C88 – SWITCH INFL RST I/P MDL MAN SUPPRESSION -- DELETE
K29 – MODULE,POWERTRAIN CONTROL
LS1 – ENGINE GAS, 8 CYL, 5.7L, SFI, ALUMINUM ENGINE
LS6 – ENGINE GAS, 8 CYL, 5.7L, SFI, ALUMINUM, HIGH OUTPUT
NB6 – EMISSION SYSTEM CALIFORNIA,TIER 1
NC1 -- EMISSION SYSTEM CALIFORNIA, LEV
NF2 -- EMISSION SYSTEM,FEDERAL,TIER 1
T90 – LAMP,SIGNALING AND MARKER(EXPORT)
VBX – LANGUAGE LABEL ARABIC
VH5 – PLATE,VEHICLE IDENTIFICATION(EXPORT)
VJ4 – LABEL, EXPORT CHILD SEAT LOCATION
Z49 – MANDATORY CANADIAN BASE EQUIPMENT MODIFICATIONS(CANADIAN)

cardiagn.com

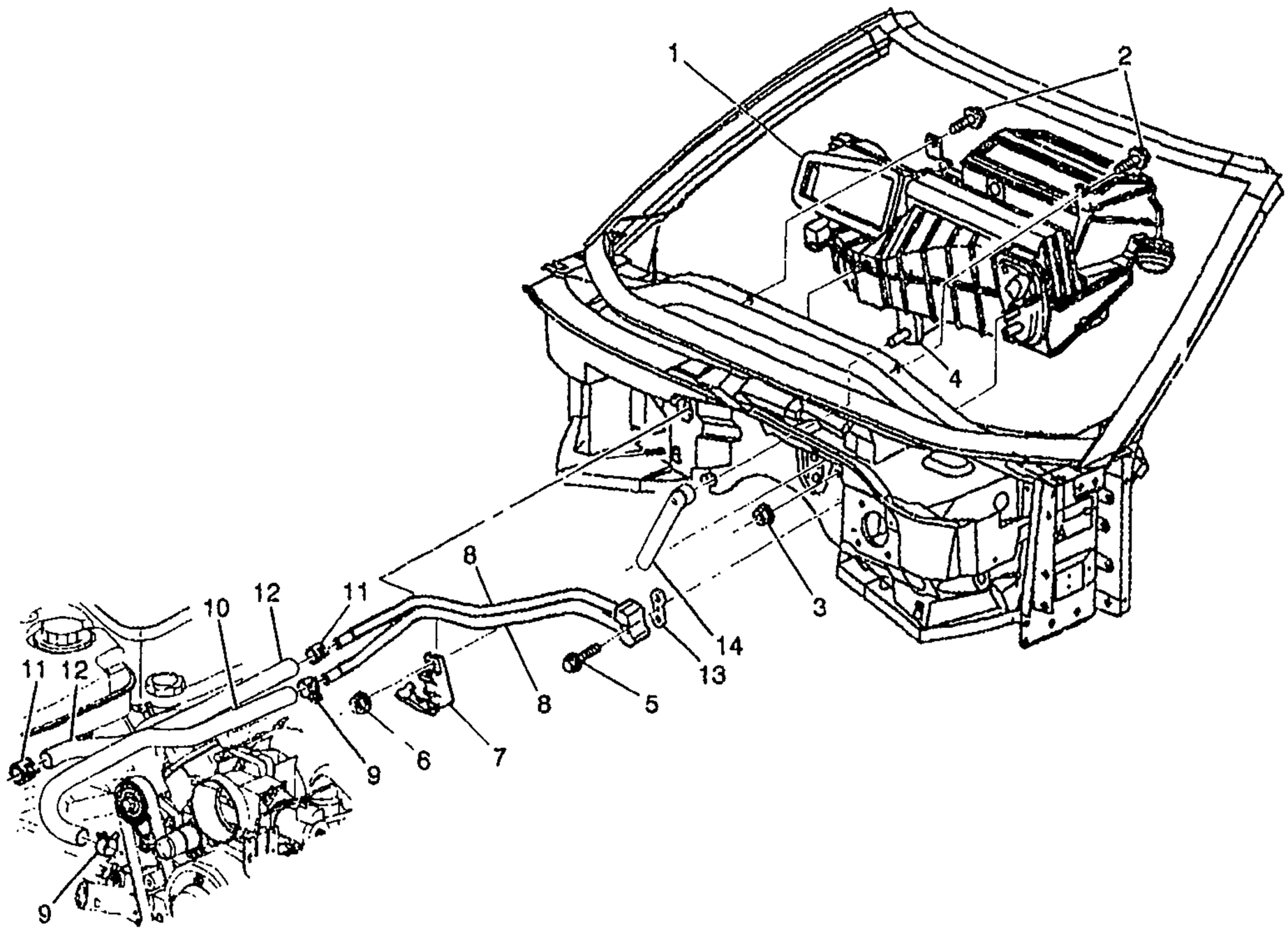

bc

1Y08-018

1997-2002 Y HOSES & PIPES/HEATER

1.		N.S.	MODULE, HTR & A/C EVPR & BLO (CPS) (FOR DETAILED ILLUSTRATION, SEE "MODULE-HTR & A/C EVAP & BLO" ART IN GROUP 9)				
2.		8.900	BOLT, HEX W/CON WA, M6X1X20 (A/C EVPR & BLO MDL)	97-02	.....	2	11514623
3.		8.917	NUT ASM, HEX W/TT CON WA & SEALING WA, M6X1X5.5, 24 OD, (9), PS (A/C EVPR & BLO MDL) ..	97-02	.....	2	11509567
4.	4-C11	8.854	SEAL, HTR CORE TUBE (PART OF 1) (BLACK) (RUBBER) (CAPTURED O-RING) (6.927) (AC-DELCO #15-3985) (POA 10419475, FOR 2ND DES SEE 2724966)	00	Y (1ST DES)	1	52454646

cardiagn.com

							1Y08-018
	4-C11	8.854	SEAL, HTR CORE TUBE (3/4") (PART OF 1) (25MM OD X 17MM ID) (CONTAINS 2 METAL/RUBB"O" RINGS) (9.222) (AC-DELCO #15-31101)	99	Y	1	2724966
	4-C11	8.854	SEAL, HTR CORE TUBE (3/4") (PART OF 1) (25MM OD X 17MM ID) (CONTAINS 2 METAL/RUBB"O" RINGS) (9.222) (AC-DELCO #15-31101) (POA 10441063, FOR 1ST DES SEE 52454646)	00	Y (2ND DES)	1	2724966
	4-C11	8.854	SEAL, HTR CORE TUBE (5/8") (PART OF 1) (CONTAINS 2 SEALS 5/8") (9.222) (AC-DELCO #15-30917)	97-02	Y	1	2724952
5.		8.900	BOLT-HFH, M6X1X45, 17 THD, 14.2 OD, 9.8, 6280M, MACH, HDR-PT (HTR INL & OTLT PIPE)	97-02	.....	1	11517523
6.		8.917	NUT, HEX W/CON WA 6X1X5.5 16-OD ZP 9 (HTR INL & OTLT PIPE)	97-02	.....	1	11517293
7.	4-C11	8.846	CLIP, HTR INL & OTLT PIPE	97-02	Y	1	15727547
8.	4-C11	8.846	PIPE, HTR INL & OTLT	97-02	Y	1	10272937
9.		8.948	CLAMP, HTR HOSE (22-26MM) (1 AT ENG; 1 AT PIPE)	97-02	.....	2	11517133
10.	4-C11	8.846	HOSE, HTR INL (W/O VLV)	97-02	Y	1	10407026
11.		8.948	CLAMP, HTR HOSE (22-26MM) (HTR OTLT HOSE) (1 AT PIPE; 1 AT SURGE TK)	97-02	.....	2	11517133
12.		8.962	HOSE (HTR OTLT)	97-02	.....	1	12368235
13.	4-C11	8.854	SEAL, HTR CORE TUBE (BLACK) (RUBBER) (CAPTURED O-RING) (8.927) (AC-DELCO #15-3985) (POA 10419475, FOR 2ND DES SEE 2724966)	00	Y (1ST DES)	1	52454646
	4-C11	8.854	SEAL, HTR CORE TUBE (3/4") (25MM OD X 17MM ID) (CONTAINS 2 METAL/RUBB"O" RINGS) (9.222) (AC-DELCO #15-31101)	99	Y	1	2724966
	4-C11	8.854	SEAL, HTR CORE TUBE (3/4") (25MM OD X 17MM ID) (CONTAINS 2 METAL/RUBB"O" RINGS) (9.222) (AC-DELCO #15-31101) (POA 10441063, FOR 1ST DES SEE 52454646) ...	00	Y (2ND DES)	1	2724966
	4-C11	8.854	SEAL, HTR CORE TUBE (5/8") (CONTAINS 2 SEALS 5/8") (9.222) (AC-DELCO #15-30917)	97-02	Y	1	2724952
14.	4-D10	9.211	TUBE, A/C EVPR & BLO MDL DRN	97-02	Y	1	10268285

cardiagn.com

ILLUSTRATION INDEX

	TITLE	GRID
1997–2002	Y A/C EVAPORATOR & BLOWER MODULE ASM (CJ2)	4–I4
1997–2002	Y A/C EVAPORATOR & BLOWER MODULE ASM (C60)	4–I8
1997–2002	Y A/C COMPRESSOR ASM	4–I12
1997–2002	Y A/C COMPRESSOR MOUNTING	4–I14
1997–2002	Y A/C REFRIGERATION SYSTEM	4–I15
1997–2002	Y A/C AIR DISTRIBUTION SYSTEM	4–I19
1997–2002	Y A/C & HEATER CONTROL ASM (CJ2,C60)	4–I23
1997–2002	Y A/C CONTROL SYSTEM (ELECTRICAL & VACUUM)	4–J2
1997–2002	Y07 ANTENNA ASM	4–J7
1998–2002	Y67 ANTENNA ASM	4–J9
1999–2002	Y37 ANTENNA ASM	4–J11
1997–2002	Y07 AUDIO SYSTEM	4–J13
1998–2002	Y67 AUDIO SYSTEM	4–J19
1999–2002	Y37 AUDIO SYSTEM	4–K2

cardiagn.com

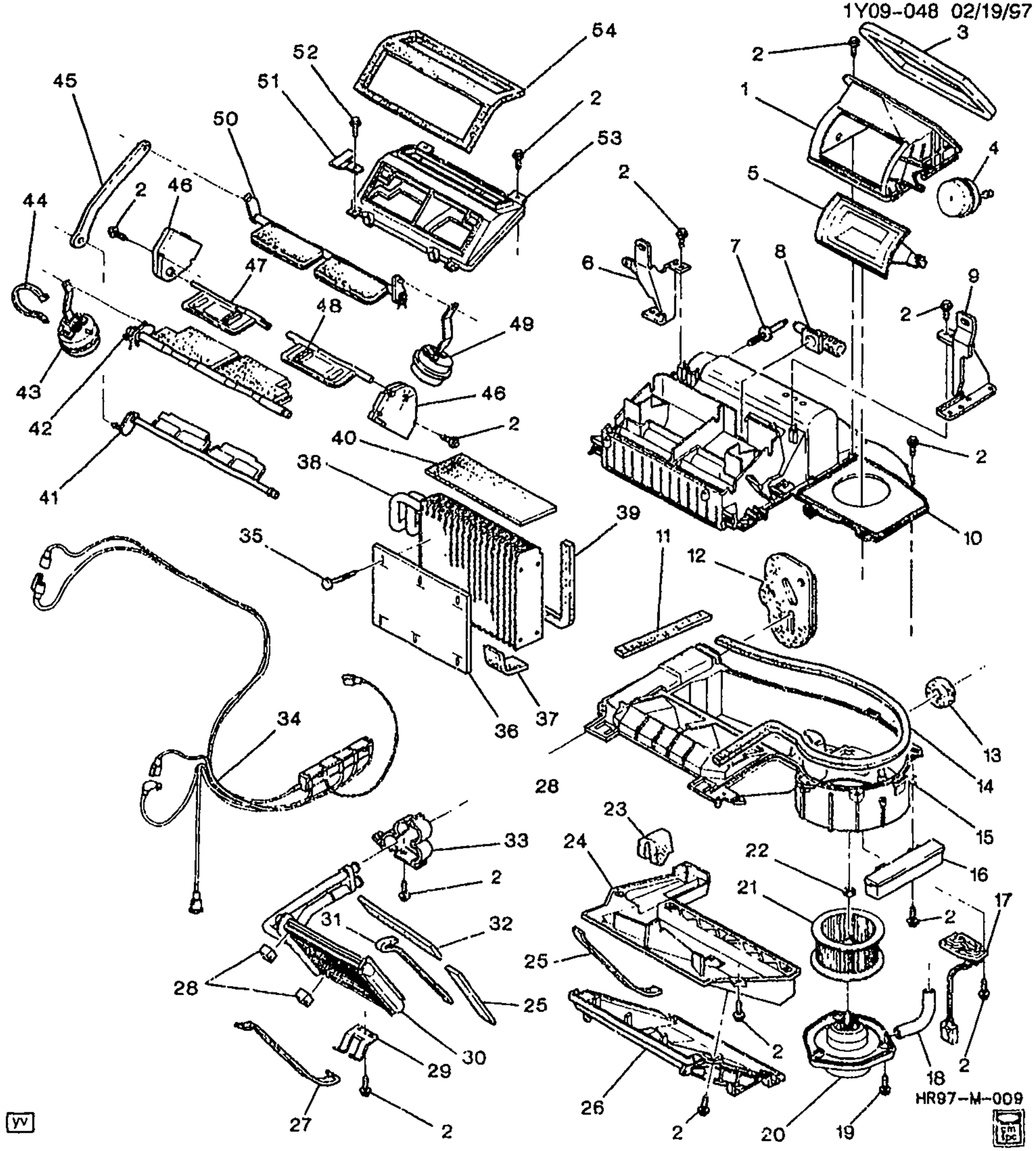

1997-2002 Y A/C EVAPORATOR & BLOWER MODULE ASM (CJ2)

1.	4-D28	9.782	INLET, AIR (9.786)	97-02	Y	1 52493003
2.		N.S.	BOLT, CASE		.....	
3.		N.S.	SEAL, AIR INL (*KIT1)		.....	
4.	4-D16	9.280	ACTUATOR, AIR INL VLV (AC-DELCO #15-72280)	97-02	Y	1 52472512

cardiagn.com

							1Y09-048
5.	4-D28	9.784	VALVE, AIR INL	97-02	Y	1	52487553
6.	4-D10	9.211	BRACKET, HTR & A/C EVPR MDL UPR (9.280)	97-02	Y	LH	52470729
7.	4-D10	9.211	STUD, HTR & A/C EVPR & BLO MDL	97-02	Y	2	52477012
8.	4-D14	9.275	ASPIRATOR, I/S AIR TEMP SEN (W/O DUCT, CONNECTOR & MUFFLER)	97-02	Y (CJ2)	1	25649706
9.	4-D10	9.211	BRACKET, HTR & A/C EVPR MDL UPR (9.280)	97-02	Y	RH	52470730
10.	4-C11	8.854	CASE, BLO UPR	97-98	Y	1	52478936
	4-C11	8.854	CASE, BLO UPR	99-02	Y	1	52481841
11.		N.S.	SEAL, BLO CASE (*KIT1)				
12.		N.S.	SEAL, A/C EVPR TUBE (*KIT1)				
13.		N.S.	SEAL, A/C EVPR CASE DRN TUBE (*KIT1)				
14.		N.S.	SEAL, BLO (*KIT1)				
15.	4-C11	8.854	CASE, BLO LWR	97-02	Y	1	52481842
16.	4-D16	9.280	VALVE, HTR & A/C CONT VAC CONT SOL (AC-DELCO #15-72182)	97-02	Y (CJ2)	1	16171742
17.	4-D14	9.275	MODULE, BLO MOT CONT (AC-DELCO #15-8756)	97-02	Y (CJ2)	1	52479971
	4-D14	9.275	CONNECTOR, MDL-BLO MOT CONT (BLACK) (8-WAY F W/LEADS, 7-12GA & 4-18GA AS REQ) (2.535) (AC-DELCO #PT1346)	97-02	Y	1	15306189
	4-D14	9.275	CONNECTOR, MDL-BLO MOT CONT (4-WAY FEMALE M/P 280 (W/LEADS) .) (4-WAY F W/LEADS) (13.100) (AC-DELCO #PT1231)	97-02	Y	1	15306069
	4-D14	9.275	CONNECTOR, MDL-BLO MOT CONT (4-WAY FEMALE M/P 280 (W/LEADS) .) (4-WAY F W/LEADS) (13.100) (AC-DELCO #PT1231)	02	YY67 (M30, CJ2, N37) (EXC T89)	1	15306069
18.	4-D11	9.218	TUBE, BLO MOT CLG	97-02	Y (CJ2)	1	3035192
	4-C13	8.859	TUBE, BLO MOT CLG (9.218)	97-02	Y (CJ2)	1	3035192
19.		N.S.	BOLT, BLO MTR				
20.	4-D11	9.215	MOTOR, BLO (W/IMPLR) (INCLS 21, 22) (AC-DELCO #15-8956)	97-99	Y (CJ2)	1	52489328
	4-C12	8.855	MOTOR, BLO (W/IMPLR) (INCLS 21, 22) (9.215) (AC-DELCO #15-8956)	97-99	Y (CJ2)	1	52489328
	4-C12	8.855	MOTOR, BLO (W/IMPLR) (INCLS 21, 22) (AC-DELCO #15-8940) (IS I.D. BY ASM 52487086 LABELED ON MTR, FOR 1ST DES SEE 52481313)	00	Y (CJ2) (2ND DES)	1	52487088
	4-D11	9.215	MOTOR, BLO (W/IMPLR) (INCLS 21, 22) (8.855) (AC-DELCO #15-8940) (IS I.D. BY ASM 52487086 LABELED ON MTR, FOR 1ST DES SEE 52481313)	00	Y (CJ2) (2ND DES)	1	52487088

cardiagn.com

							1Y09-048
	4-D11	9.215	MOTOR, BLO (W/IMPLR) (INCLS 21, 22) (AC-DELCO #15-8956) (IS I.D. BY ASM 52481316 LABELED ON MTR, FOR 2ND DES SEE 52487088)	00	Y (CJ2) (1ST DES)	1	52489328
	4-C12	8.855	MOTOR, BLO (W/IMPLR) (INCLS 21, 22) (9.215) (AC-DELCO #15-8956) (IS I.D. BY ASM 52481316 LABELED ON MTR, FOR 2ND DES SEE 52487088)	00	Y (CJ2) (1ST DES)	1	52489328
	4-C12	8.855	MOTOR, BLO (W/IMPLR) (INCLS 21, 22) (AC-DELCO #15-8940)	01-02	Y (CJ2)	1	52487088
	4-D11	9.215	MOTOR, BLO (W/IMPLR) (INCLS 21, 22) (8.855) (AC-DELCO #15-8940)	01-02	Y (CJ2)	1	52487088
21.		N.S.	IMPELLER, BLO (PART OF 20)				
22.		N.S.	NUT, BLO MTR (PART OF 20)				
23.		N.S.	SEAL, HTR CORE CVR (*KIT2)				
24.	4-C11	8.854	COVER, HTR CORE (9.211)	97-02	Y	1	52469864
25.		N.S.	SEAL, HTR CORE (*KIT2)				
26.	4-D28	9.786	CASE, AUX HTR CORE (OTLT) (8.854)	97-02	Y	1	52470736
27.		N.S.	SEAL, HTR CORE (*KIT2)				
28.		N.S.	SEAL, HTR CORE (*KIT2)				
29.	4-C11	8.854	CLAMP, HTR CORE	97-02	Y	1	52469880
30.	4-C11	8.854	CORE, HTR (AC-DELCO #15-60078)	97-02	Y	1	52481854
31.		N.S.	SEAL, HTR CORE (*KIT2)				
32.		N.S.	SEAL, HTR CORE (*KIT2)				
33.	4-C11	8.846	CLAMP, HTR CORE TUBE	97-02	Y	1	52469881
34.	4-D17	9.281	HARNESS, HTR & A/C CONT VAC	97-02	Y (CJ2)	1	52469694
35.	4-D10	9.210	RETAINER, A/C EVPR WAT FLTR (ROUND HEAD)	97-02	Y	6	3040933
36.	4-D10	9.210	FILTER, A/C EVPR AIR	97-02	Y	1	52469891
37.		N.S.	SEAL, A/C EVPR (*KIT1)				
38.	4-D10	9.210	EVAPORATOR KIT, A/C (AC-DELCO #15-6887)	97-02	Y	1	52469295
39.		N.S.	SEAL, A/C EVPR (*KIT1)				
40.		N.S.	SEAL, A/C EVPR (*KIT1)				
41.	4-C12	8.858	VALVE, TEMP (9.280) (AC-DELCO #15-5580)	97-98	Y	1	52469885
	4-C12	8.858	VALVE, TEMP (INCLS LH & RH VALVE) (9.786) (AC-DELCO #15-5680)	97-98	Y (CJ2)	1	52481850
	4-D28	9.786	VALVE, VENT (9.280) (AC-DELCO #15-5580)	99-02	Y	1	52469885
42.	4-D10	9.211	HOUSING, AIR INL (W/VLV & ACTUATOR)	97	Y	1	52485032
		N.S.	VALVE, MODE (PART OF 53)	98			
	4-D28	9.786	VALVE, MODE	99-00	Y	1	52482058
	4-D28	9.786	VALVE, MODE	01-02	Y (C60, CJ2)	1	52494489
43.	4-D16	9.280	ACTUATOR, MODE VLV (AC-DELCO #15-5579)	97	Y	1	52472511
	4-D16	9.280	ACTUATOR, MODE VLV (AC-DELCO #15-72647)	99-02	Y	1	52487750

cardiagn.com

							1Y09–048
	4–D16	9.280	ACTUATOR, MODE VLV (ACTUATOR HAS GOLD HARDWARE, FOR 1ST DES SEE 52472511) (AC–DELCO #15–72647)	98	Y (2ND DES)	1	52487750
	4–D16	9.280	ACTUATOR, MODE VLV (ACTUATOR HAS SILVER HARDWARE, FOR 2ND DES SEE 52482059) (AC–DELCO #15–5579)	98	Y (1ST DES)	1	52472511
44.		N.S.	STRAP				
45.	4–D28	9.779	LINK, DEFR VLV (9.786)	97–02	Y	1	52469888
46.	4–D16	9.280	ACTUATOR, TEMP VLV	97–02	Y (CJ2)	2	16163982
47.	4–C12	8.858	VALVE, TEMP (LH) (*KIT3) (AC–DELCO #15–5875)	01–02	Y (CJ2)	1	52494493
	4–C12	8.858	VALVE, TEMP (*KIT3) (9.280) (AC–DELCO #15–5580)	97–98	Y	1	52469885
	4–C12	8.858	VALVE, TEMP (INCLS LH & RH VALVE) (*KIT3) (9.786) (AC–DELCO #15–5680)	97–00	Y (CJ2)	1	52481850
48.		N.S.	VALVE, TEMP (RH) (*KIT3)				
49.	4–D16	9.280	ACTUATOR, DEFR VLV (AC–DELCO #15–72605)	97–02	Y	1	52487593
50.	4–D28	9.779	VALVE, DEFR	97–02	Y	1	52482269
51.		N.S.	BRACKET, MODE VLV SHF				
52.		N.S.	BOLT, BRKT				
53.	4–D28	9.786	CASE, AIR DISTR (9.211)	97	Y	1	52469863
	4–D10	9.211	HOUSING, AIR INL (INCLS 42) (W/VLV & ACTUATOR)	98	Y	1	52485032
	4–D28	9.786	CASE, AIR DISTR	99–02	Y	1	52482268
54.		N.S.	SEAL, AIR DISTR (*KIT1)				

SERVICE KITS

1.	4–D10	9.211	SEAL KIT, A/C EVPR (INCLS 3, 11, 12, 13, 14, 37, 39, 40, 54) (NEEDED WHEN SERVICING EVAP CORE)	97–02	Y	1	52478813
2.	4–C11	8.845	SEAL KIT, HTR (NEEDED WHEN SERVICING HEATER CORE) (INCLS 23, 25, 27, 28, 31, 32)	07–02		1	52478817
3.	4–C12	8.858	VALVE, TEMP (AC–DELCO #15–5875)	01–02	Y (CJ2)	1	52494493
	4–C12	8.858	VALVE, TEMP (9.280) (AC–DELCO #15–5580)	97–98	Y	1	52469885
	4–C12	8.858	VALVE, TEMP (INCLS LH & RH VALVE) (9.786) (AC–DELCO #15–5680)	97–00	Y (CJ2)	1	52481850

RPO DEFINITIONS
CJ2 – HVAC SYSTEM AIR CONDITIONER FRT, AUTO TEMP CONT, AUX TEMP CONT
C60 – AIR CONDITIONER,FRONT,MANUAL CONTROLS
M30 – TRANSMISSION,AUTOMATIC 4 SPEED,4L60E,ELECTRONIC
N37 – STEERING COLUMN,TILT AND TELESCOPING
T89 – LAMP,TAIL AND STOP(EXPORT)

cardiagn.com

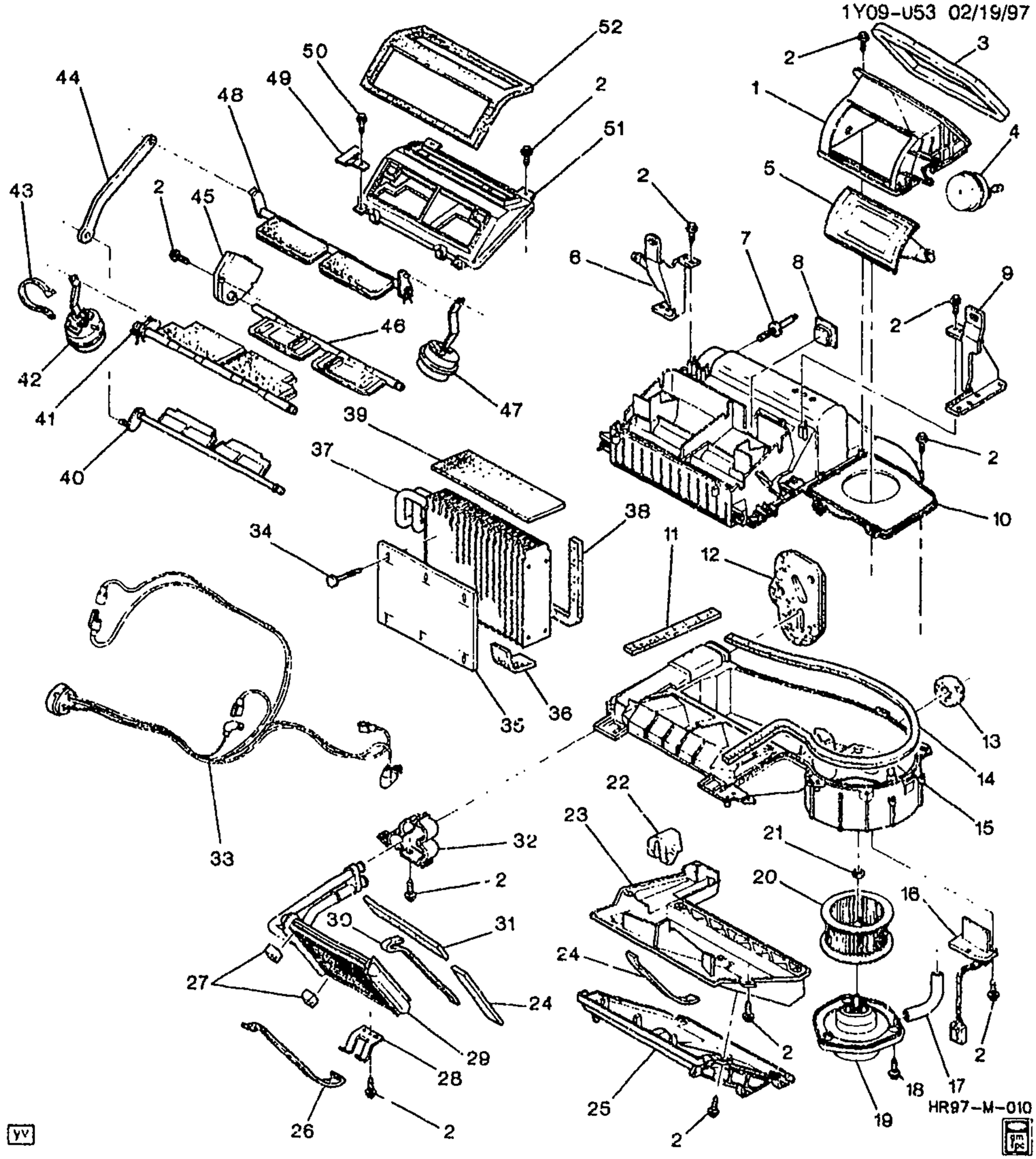

1Y09-053

1997-2002 Y A/C EVAPORATOr & BLOWER MODULE ASM (C60)

1.	4-D23	9.782	INLET, AIR (9.786)	97-02	Y	1 52493003
2.	4-D12	9.262	BOLT, FLR AIR OTLT DUCT (4.2X2.25X16) (9.786)	97-02	Y	4 52466167
3.		N.S.	SEAL, AIR INL (*KIT1)		.....	

cardiagn.com

							1Y09-053
4.	4-D16	9.280	ACTUATOR, AIR INL VLV (AC-DELCO #15-72280)	97-02	Y	1	52472512
5.	4-D28	9.784	VALVE, AIR INL	97-02	Y	1	52487553
6.	4-D10	9.211	BRACKET, HTR & A/C EVPR MDL UPR (9.280)	97-02	Y	LH	52470729
7.	4-D10	9.211	STUD, HTR & A/C EVPR & BLO MDL	97-02	Y	2	52477012
8.	4-D12	9.262	PLUG, HTR CASE	97-02	Y (C60)	1	52474371
9.	4-D10	9.211	BRACKET, HTR & A/C EVPR MDL UPR (9.280)	97-02	Y	RH	52470730
10.	4-C11	8.854	CASE, BLO UPR	97-98	Y	1	52478936
	4-C11	8.854	CASE, BLO UPR	99-02	Y	1	52481841
11.		N.S.	SEAL, BLO CASE (*KIT1)				
12.		N.S.	SEAL, A/C EVPR TUBE (*KIT1)				
13.		N.S.	SEAL, A/C EVPR CASE DRN TUBE (*KIT1)				
14.		N.S.	SEAL, BLO (*KIT1)				
15.	4-C11	8.854	CASE, BLO LWR	97-02	Y	1	52481842
16.	4-D11	9.215	RESISTOR, BLO MOT (AC-DELCO #15-8713)	97-02	Y (C60)	1	15304891
	4-C12	8.855	RESISTOR, BLO MOT (9.215) (AC-DELCO #15-8713)	97-02	Y (C60)	1	15304891
	4-D14	9.275	CONNECTOR, MDL-HTR, A/C PROGMR (BLACK) (7-WAY F) (W/LEADS) (10.163) (AC-DELCO #PT547)	97-02	Y	1	12125635
17.	4-D11	9.218	TUBE, BLO MOT CLG	00-02	Y (C60)	1	52487082
	4-C13	8.859	TUBE, BLO MOT CLG (9.218)	00-02	Y (C60)	1	52487082
	4-D11	9.218	TUBE, BLO MOT CLG	97-99	Y (C60)	1	3035192
	4-C13	8.859	TUBE, BLO MOT CLG (9.218)	97-99	Y (C60)	1	3035192
18.		N.S.	BOLT, BLO MTR				
19.	4-D11	9.215	MOTOR, BLO (W/IMPLR) (INCLS 20, 21) (AC-DELCO #15-8955)	97-99	Y (C60)	1	52489327
	4-C12	8.855	MOTOR, BLO (W/IMPLR) (INCLS 20, 21) (9.215) (AC-DELCO #15-8955)	97-99	Y (C60)	1	52489327
	4-C12	8.855	MOTOR, BLO (W/IMPLR) (INCLS 20, 21) (AC-DELCO #15-8880)	00-02	Y (C60)	1	52487083
	4-D11	9.215	MOTOR, BLO (W/IMPLR) (INCLS 20, 21) (8.855) (AC-DELCO #15-8880)	00-02	Y (C60)	1	52487083
	4-C12	8.855	CONNECTOR, RLY-BLO MOT (BLACK) (6-WAY F) (W/O LEADS) (3.900)	98-00	Y	1	12110541
20.		N.S.	IMPELLER, BLO (PART OF 19)				
21.		N.S.	NUT, BLO MTR (PART OF 19)				
22.		N.S.	SEAL, HTR CORE CVR (*KIT2)				
23.	4-C11	8.854	COVER, HTR CORE (9.211)	97-02	Y	1	52469864
24.		N.S.	SEAL, HTR CORE (*KIT2)				
25.	4-D28	9.786	CASE, AUX HTR CORE (OTLT) (8.854)	97-02	Y	1	52470736
26.		N.S.	SEAL, HTR CORE (*KIT2)				
27.		N.S.	SEAL, HTR CORE (*KIT2)				
28.	4-C11	8.854	CLAMP, HTR CORE	97-02	Y	1	52469880
29.	4-C11	8.854	CORE, HTR (AC-DELCO #15-60078)	97-02	Y	1	52481854
30.		N.S.	SEAL, HTR CORE (*KIT2)				

cardiagn.com

							1Y09-053
31.		N.S.	SEAL, HTR CORE (*KIT2)				
32.	4-C11	8.846	CLAMP, HTR CORE TUBE	97-02	Y	1	52469881
33.	4-D17	9.281	HARNESS, HTR & A/C CONT VAC	97-02	Y (C60)	1	52482272
34.	4-D10	9.210	RETAINER, A/C EVPR WAT FLTR (ROUND HEAD)	97-02	Y	6	3040933
35.	4-D10	9.210	FILTER, A/C EVPR AIR	97-02	Y	1	52469801
36.		N.S.	SEAL, A/C EVPR (*KIT1)				
37.	4-D10	9.210	EVAPORATOR KIT, A/C (AC-DELCO #15-6887)	97-02	Y	1	52469295
38.		N.S.	SEAL, A/C EVPR (*KIT1)				
39.		N.S.	SEAL, A/C EVPR (*KIT1)				
40.	4-C12	8.858	VALVE, TEMP (9.280) (AC-DELCO #15-5580)	97-98	Y	1	52469885
	4-D28	9.786	VALVE, VENT (9.280) (AC-DELCO #15-5580)	99-02	Y	1	52469885
41.	4-D10	9.211	HOUSING, AIR INL (W/VLV & ACTUATOR)	97	Y	1	52485032
	4-D28	9.786	VALVE, MODE	99-00	Y	1	52482058
	4-D28	9.786	VALVE, MODE	01-02	Y (C60, CJ2)	1	52494489
	4-D10	9.211	HOUSING, AIR INL (W/VLV & ACTUATOR)	98	Y	1	52485032
42.	4-D16	9.280	ACTUATOR, MODE VLV (AC-DELCO #15-5579)	97	Y	1	52472511
	4-D16	9.280	ACTUATOR, MODE VLV (AC-DELCO #15-72647)	99-02	Y	1	52487750
	4-D16	9.280	ACTUATOR, MODE VLV (ACTUATOR HAS GOLD HARDWARE, FOR 1ST DES SEE 52472511) (AC-DELCO #15-72647)	98	Y (2ND DES)	1	52487750
	4-D16	9.280	ACTUATOR, MODE VLV (ACTUATOR HAS SILVER HARDWARE, FOR 2ND DES SEE 52482059) (AC-DELCO #15-5579)	98	Y (1ST DES)	1	52472511
43.		N.S.	STRAP				
44.	4-D28	9.779	LINK, DEFR VLV (9.786)	97-02	Y	1	52469888
45.	4-D16	9.280	ACTUATOR, TEMP VLV (MODE & TEMP) (AC-DELCO #15-72634)	97-02	Y (C60)	1	16177412
46.	4-C12	8.858	VALVE, TEMP (AC-DELCO #15-5582)	97-02	Y (C60)	1	52469884
47.	4-D16	9.280	ACTUATOR, DEFR VLV (AC-DELCO #15-72605)	97-02	Y	1	52487593
48.	4-D28	9.779	VALVE, DEFR	97-02	Y	1	52482269
49.	4-D28	9.786	BRACKET, MODE VLV SHF	97	Y	1	52478143
		N.S.	BRACKET, MODE VLV SHF	98-02			
50.		N.S.	BOLT, BRKT				
51.	4-D28	9.786	CASE, AIR DISTR	99-02	Y	1	52482268
	4-D10	9.211	HOUSING, AIR INL (W/VLV & ACTUATOR)	98	Y	1	52485032
	4-D10	9.211	HOUSING, AIR INL (W/VLV & ACTUATOR)	97	Y	1	52485032
52.		N.S.	SEAL, AIR DISTR (*KIT1)				

cardiagn.com

SERVICE KITS

1.	4–D10	9.211	SEAL KIT, A/C EVPR (INCLS 3, 11, 12, 13, 14, 36, 38, 39, 52) (NEEDED WHEN SERVICING EVAP CORE)	97–02	Y	1	52478813
2.	4–C11	8.845	SEAL KIT, HTR (NEEDED WHEN SERVICING HEATER CORE) (INCLS 22, 24, 26, 27, 30, 31)	97–02	Y	1	52478817

RPO DEFINITIONS
CJ2 – HVAC SYSTEM AIR CONDITIONER FRT, AUTO TEMP CONT, AUX TEMP CONT
C60 – AIR CONDITIONER,FRONT,MANUAL CONTROLS

cardiagn.com

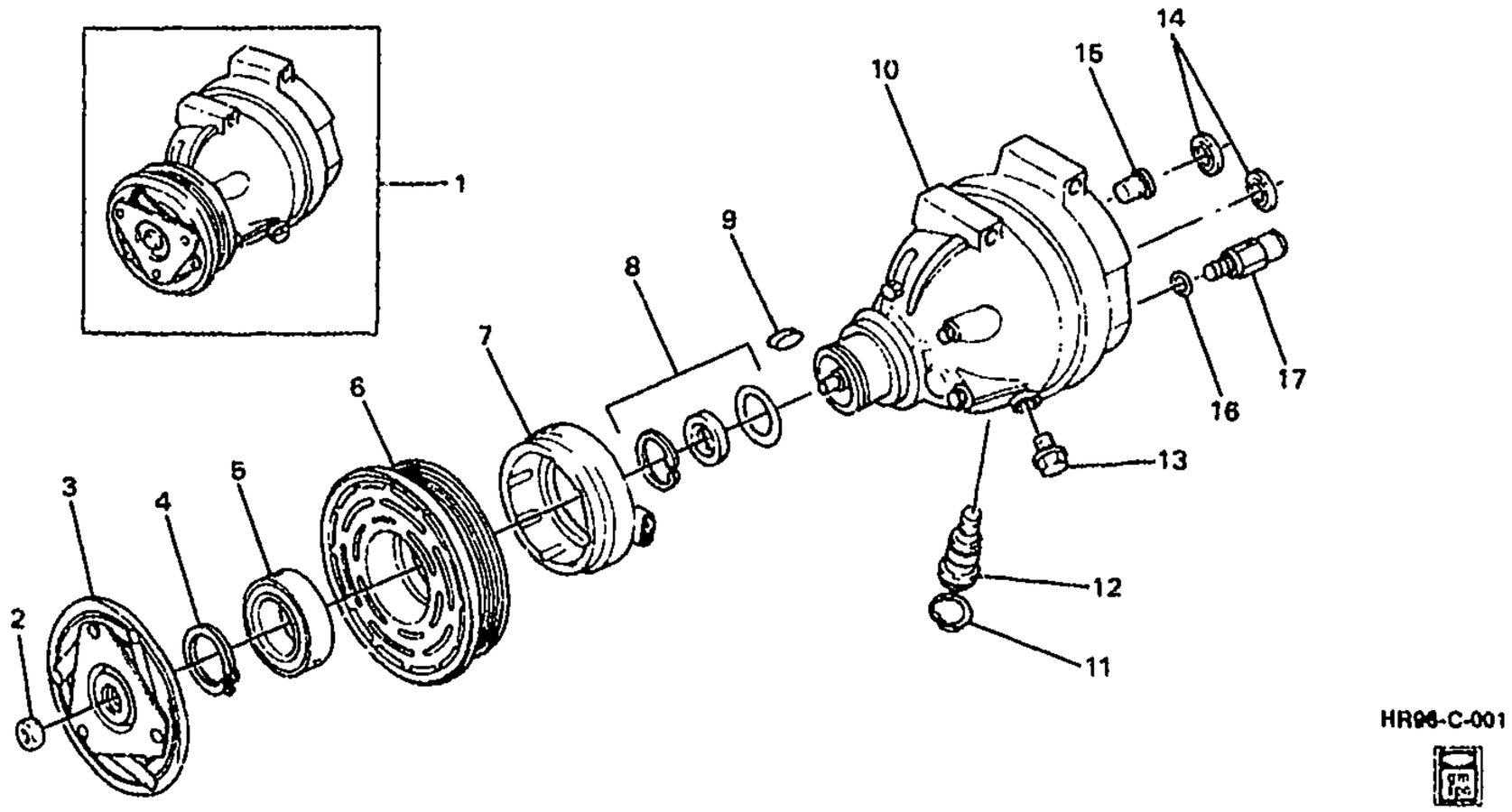

GM09-227Y

1997-2002 Y A/C COMPRESSOR ASM

1.	4-D8	9.170	COMPRESSOR, A/C (V7 W/CLUTCH) (AC-DELCO #15-20729)	97-01	Y	1	1137026
	4-D8	9.170	COMPRESSOR, A/C (V7 W/CLUTCH) (AC-DELCO #15-20746)	02	Y	1	1137031
		8.800	OIL, REFRIGERANT - 134A (SADEN) 250CC FOR USE ONLY ON SADEN A/C COMPRESSORS SD7H15 USING 134A REFRIGERANT (A/C CMPR)	97-02		AR	12345923
2.	4-D9	9.181	NUT, A/C CLU (HEX LOCK, M9X1.25X6.14, SAE 1110, STL, ZP) (AC-DELCO #15-4263)	97-01	Y	1	6557414
3.	4-D9	9.188	CLUTCH, A/C (CLUTCH DRIVER) (9.180) (AC-DELCO #15-4685)	97-02	Y	1	6581515
4.	4-D9	9.181	RING, A/C CMPR PUL BRG RET (AC-DELCO #15-2786)	97-02	Y	1	6557617
5.	4-D9	9.181	BEARING, A/C CMPR PUL (PART OF 6) (9.188) (AC-DELCO #15-2802)	97-02	Y	1	6559469
6.	4-D9	9.180	PULLEY, A/C CMPR (INCLS 5) (AC-DELCO #15-4686)	97-01	Y	1	6580622
7.	4-D9	9.186	COIL, A/C CLU (W/HSG) (MATES W/CONN 12101937) (AC-DELCO #15-4440)	97-02	Y	1	6552423
8.	4-D8	9.175	SEAL KIT, A/C CMPR SHF (AC-DELCO #15-31018)	97-02	Y	1	2724964
9.	4-D9	9.188	KEY, A/C CLU (AC-DELCO #15-4262)	97-01	Y	1	6557411
10.		N.S.	COMPRESSOR, A/C (W/O CLU)				

cardiagn.com

							GM09-227Y	
11.		N.S.	RING, A/C CMPR VAR DISPL C/VLV RET (PART OF 12)		.....			
12.	4-D8	9.176	VALVE, A/C CMPR VAR DISPL CONT (INCLS 11) (AC-DELCO #15-5452)	97-02	Y		1	2724790
13.	4-D8	9.170	PLUG, A/C CMPR OIL DRN (AC-DELCO #15-31017)	97-02	Y		1	6560692
14.	4-D11	9.222	SEAL KIT, A/C CMPR & CNDSR HOSE MANIF (CONTAINS 2 SEALS 5/8") (AC-DELCO #15-2722)	97-02	Y		1	2724577
15.	4-D8	9.172	SCREEN, A/C CMPR SUC (AC-DELCO #15-2817)	97-01	Y		1	6559238
16.	4-D11	9.222	SEAL, A/C CMPR PRESS RLF VLV (O RING) (PART CF 17) (W/5 VALVE SEALS) (AC-DELCO #15-30992)	97-01	Y		1	2724958
17.	4-D9	9.178	VALVE, A/C CMPR PRESS RLF (INCL 16) (W/O-RING) (W/ ENGLISH THREAD) (AC-DELCO #15-5415)	97-98	Y		1	6552743
	4-D9	9.178	VALVE, A/C CMPR PRESS RLF (INCL 16) (CONTAINS VALVE, O-RING, AND AN ADAPTER) (AC-DELCO #15-5711)	99-02	Y		1	2724982

cardiagn.com

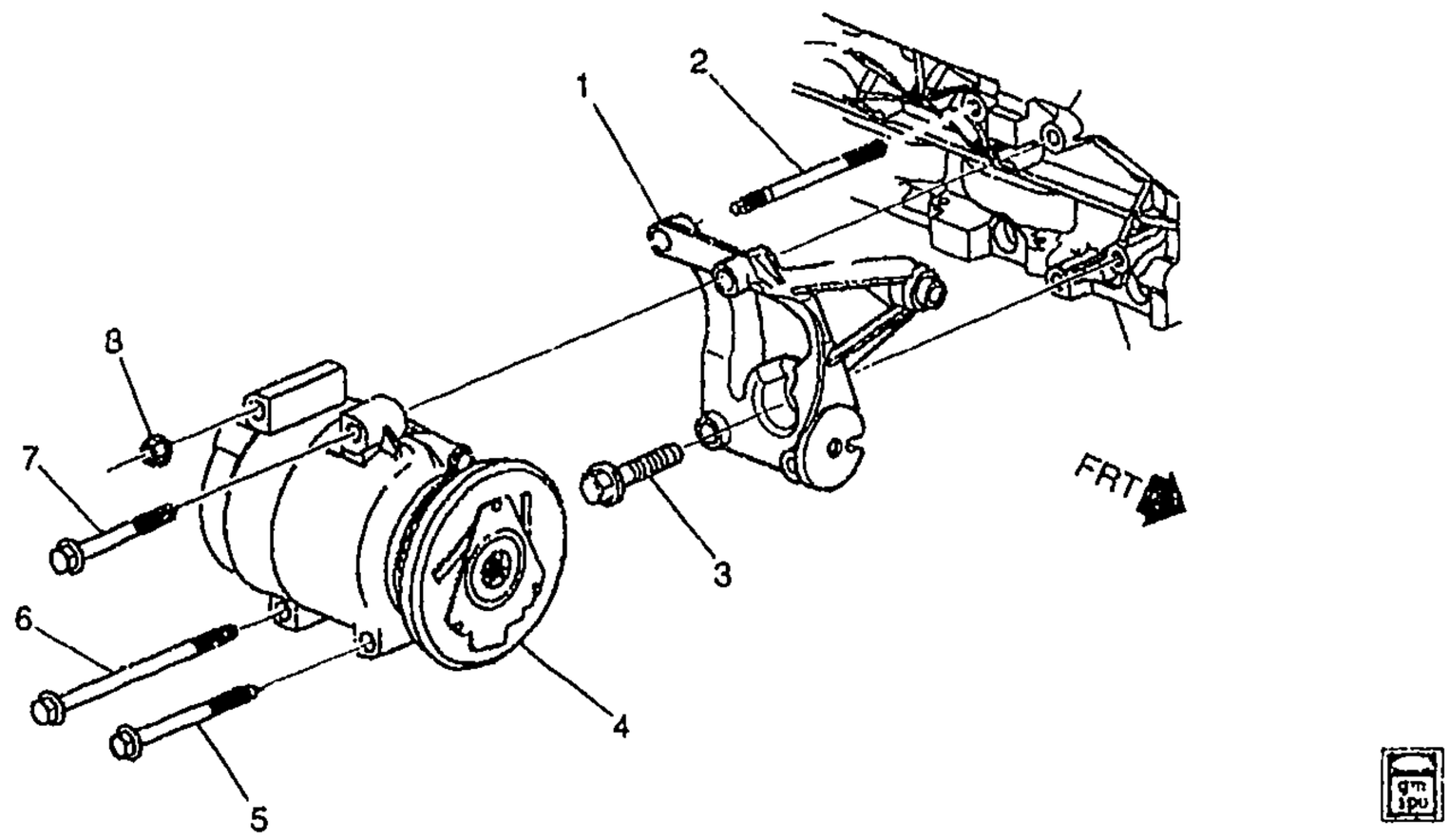

1Y09-054

1997-2002 Y A/C COMPRESSOR MOUNTING

1.	4-D8	9.171	BRACKET, A/C CMPR	97-02	Y	1	12556444
2.	4-D8	9.173	STUD, A/C CMPR (9.171)	97-02	Y	1	12556447
3.		8.900	BOLT, HFH, M10X1.5X40, 30 THD, 22.3 OD, 10.9 MAT, 7114M FIN, MACH, RED BDY (POSN #1)	97-02		1	11515768
4.	4-D8	9.170	COMPRESSOR, A/C (V7 W/CLUTCH) (AC-DELCO #15-20729)	97-01	Y	1	1137026
	4-D8	9.170	COMPRESSOR, A/C (V7 W/CLUTCH) (AC-DELCO #15-20746)	02	Y	1	1137031
		N.S.	DIODE, A/C CMPR				
5.		8.900	BOLT/SCREW, M10X1.5X110 (4.3"), 15MM SOCKET/P-PT, GM7114M, PZOR (POSN #2)	97-02		1	11516714
6.	4-D8	9.173	BOLT, A/C CMPR	97-02	Y	1	12552922
7.		8.900	BOLT, HFH M10X1.5X90 22.3-OD, DIM A-30 9.8 POR (A/C CMPR UPR FRT BRKT)	97-02		1	11509202
8.		8.915	NUT, HFH, 10X1.5 6H THD, 21.3 OD, 9.8 THK 13 HEX DR, GRD 9, ZF (A/C CMPR RR UPR BR) (8.917)	97-02		1	10255857

cardiagn.com

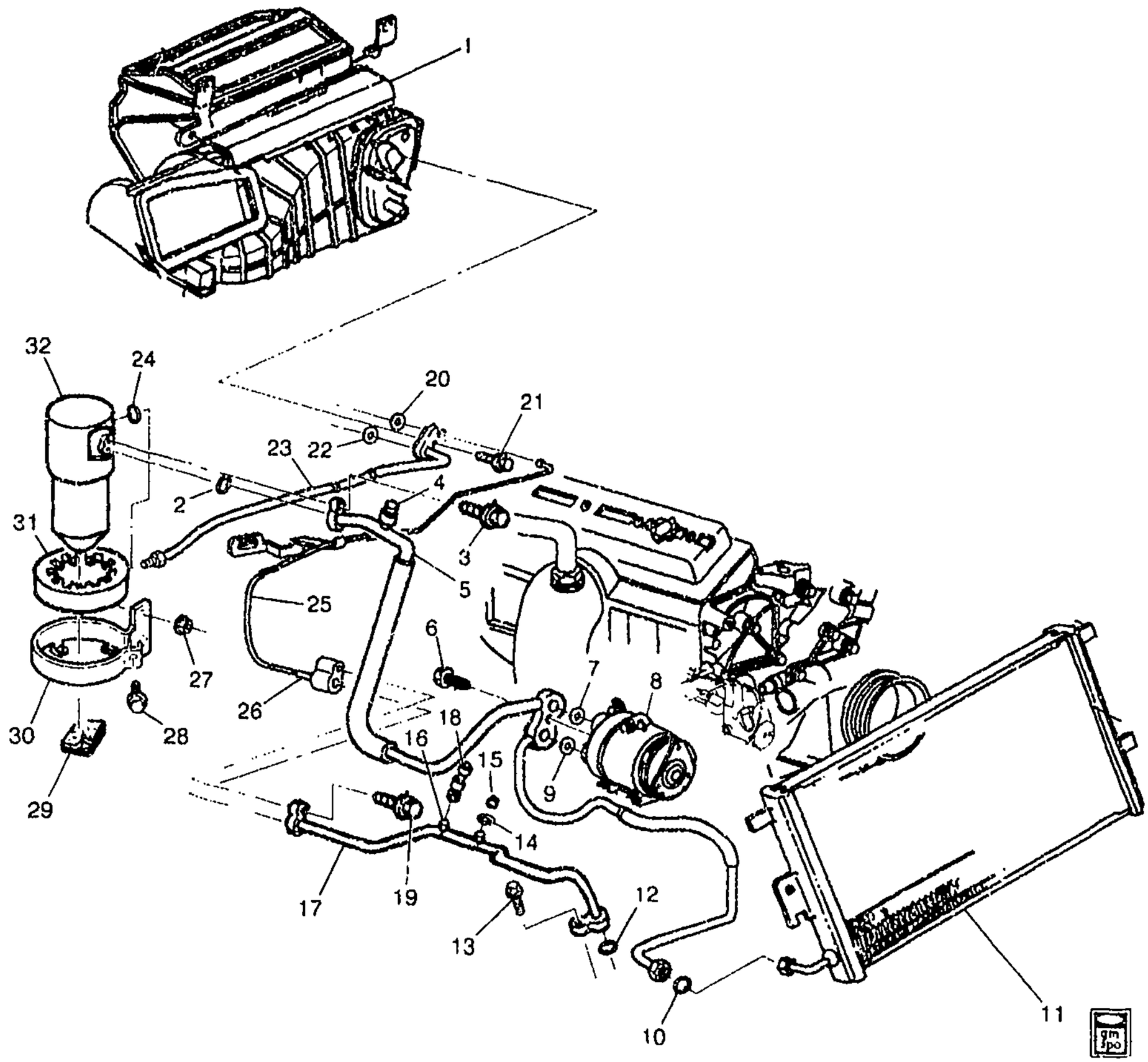

1Y09-045

1997-2002 Y A/C REFRIGERATION SYSTEM

1.	N.S.	MODULE, HTR & A/C EVPR & BLO (FOR DETAILED ILLUSTRATION, SEE "A/C EVAP & BLO MODULE" ART IN GROUP 9)			
2.	8.927	O-RING, 3/4 TUBE O .D., INSIDE DIA 549 (A), .103 (B), .005 (C), .003 (C) (A/C CMPR & CNDSR HOSE (O RING)) (AC-DELCO #15-3985)	97-02	.....	1 52454646

cardiagn.com

							1Y09-045
3.		8.900	BOLT-HFH, M8X1.25X40, 22 THD, 18 OD, 10.9, 7112M, MACH (POSN #2) (AT ACCUM)	97-02	.....	1	11515792
4.	4-D8	9.177	CORE, A/C REFRIG SERV VLV (W/O O-RING) (AC-DELCO #15-1119)	97-02	Y	1	3041827
	4-D8	9.177	CAP, A/C REFRIG CHRG VLV (16.6MM I.S. DIA) (HIGH SIDE CHARGE PORT) (9.220)	97-02	Y	1	52458768
	4-D8	9.177	CAP, A/C REFRIG CHRG VLV (8MM X 1.0) (LOW SIDE SERVICE PORT) (9.220)	97-02	Y	1	52471377
5.	4-D12	9.226	HOSE ASM, A/C CMPR & CNDSR (AC-DELCO #15-30851)	97-02	Y	1	10229469
		8.800	REFRIGERANT-A/C R134A (AC DELCO) (A/C) (AC-DELCO #15-119)	97-02	.....	1	12356150
6.		8.900	BOLT, M10X1.5X32, 28.10 THD, 20.28 OD, 10.9, GM 7114M (POSN #1) (AT CMPRSR) (AC-DELCO #179-2006)	97-02	.....	1	15726460
7.	4-D11	9.222	SEAL KIT, A/C CMPR & CNDSR HOSE MANIF (CONTAINS 2 SEALS 5/8") (AC-DELCO #15-2722)	97-02	Y	1	2724577
8.	4-D8	9.170	COMPRESSOR, A/C (V7 W/CLUTCH) (AC-DELCO #15-20729)	97-01	Y	1	1137026
	4-D8	9.170	COMPRESSOR, A/C (V7 W/CLUTCH) (AC-DELCO #15-20746)	02	Y	1	1137031
		N.S.	DIODE, A/C CMPR		.....		
9.	4-D11	9.222	SEAL KIT, A/C CMPR & CNDSR HOSE MANIF (CONTAINS 2 SEALS 5/8") (AC-DELCO #15-2722)	97-02	Y	1	2724577
10.		8.927	O-RING, 1/2 TUBE O .D., INSIDE DIA .364 (A), 094 (B), .005 (C), .003 (D) (A/C CMPR & CNDSR HOSE (O RING)) (AC-DELCO #15-3984)	97-02	.....	1	52454645
11.	4-D9	9.190	CONDENSER, A/C (AC-DELCO #15-6931)	97-02	Y	1	52470569
12.		8.927	O-RING, 1/2 TUBE O .D., INSIDE DIA .364 (A), .094 (B), .005 (C), .003 (D) (A/C EVAP TUBE (O RING)) (AC-DELCO #15-3984)	97-02	.....	2	52454645
13.		8.900	BOLT, HWH, M8X1.25X40, SPL FULLTHD, AC PT, 10.9 PZOR (A/C CNDSR)	97-02	.....	1	11515758
14.		8.927	O-RING, ID .301X.070 THK. MATERIAL-NEOPRENE. (A/C EVPR TUBE) (AC-DELCO #15-3592)	97-02	.....	1	3093509

cardiagn.com

							1Y09-045
15.	4-D9	9.178	VALVE, A/C REFRIG PRESS SEN (W/O O-RING) (9.177) (AC-DELCO #15-1119)	97-02	Y	1	3041827
16.	4-D9	9.178	VALVE, A/C REFRIG HIGH PRESS SERV (AC-DELCO #15-5528)	97-02	Y	1	10245619
	4-D8	9.177	CAP, A/C REFRIG SERV VLV FTG (W/SEAL) (AC-DELCO #15-30477)	97-02	Y	1	10245620
17.	4-D11	9.220	TUBE, A/C EVPR (FRT) (TO CNDSR) (AC-DELCO #15-31139)	97-02	Y	1	10436323
18.	4-D14	9.275	SENSOR, A/C REFRIG PRESS (AC-DELCO #15-5724)	97-02	Y	1	22624066
19.		8.900	BOLT, HWH, M8X1.25X40, SPL FULLTHD, AC PT, 10.9 PZOR (A/C EVPR TUBE) (FRT TO P.R)	97-02		1	11515758
20.		8.927	O-RING, 1/2 TUBE O D, INSIDE DIA .364 (A), .094 (B), .005 (C), 003 (D) (A/C EVAP TUBE) (AC-DELCO #15-3984)	97-02		1	52454645
21.		8.900	BOLT, HWH, M8X1.25X40, SPL FULLTHD, AC PT, 10.9 PZOR (A C EVPR & ACCUM HOSE)	97-02		1	11515758
22.		8.927	O-RING, 3/4 TUBE O D INSIDE DIA .549 (A), .103 (B), .005 (C), 003 (C) (A/C ACCUM TUBE SEAL) (AC-DELCO #15-3985)	97-02		4	52454646
23.	4-D12	9.225	HOSE, A/C ACCUM (AC-DELCO #15-30852)	97-02	Y	1	10229474
24.		8.927	O-RING, 3/4 TUBE O D INSIDE DIA .549 (A), 103 (B), .005 (C), 003 (C) (A C ACCUM FTG SEAL) (AC-DELCO #15-3985)	97-02		1	52454646
25.	4-D11	9.220	TUBE, A/C EVPR (RR) (AC-DELCO #15-31138)	97-02	Y	1	10436322
26.	4-D10	9.213	ORIFICE, A/C EVPR TUBE (W/GASKET) (AC-DELCO #15-5151)	97-98	Y	1	3033879
	4-D10	9.213	ORIFICE, A/C EVPR TUBE (W/GASKET) (AC-DELCO #15-5151) (ORIFACE IS PART OF REAR AC EVAP TUBE ASSMBLY. 2ND DES SEE PART 52477004)	99	Y (1ST DES)	1	3033879
	4-D10	9.213	ORIFICE, A/C EVPR TUBE (AC-DELCO #15-5612) (ORIFACE IS PART OF FRONT AC EVAP TUBE ASSMBLY 1ST DES SEE PART 03033897)	99	Y (2ND DES)	1	52477004
	4-D10	9.213	ORIFICE, A/C EVPR TUBE (AC-DELCO #15-5612)	00-02	Y	1	52477004
27.		8.917	NUT, HEX W/CON WA 6X1X5 5 16-OD ZP 9 (A/C ACCUM BRKT)	97-02		2	11517293

cardiagn.com

							1Y09-045
		8.927	WASHER, SEALING, 4 ID, 25 OD, M4 THK, RUB (A/C ACCUM BRKT)	97-02		2	20733729
28.		8.977	SCREW, 6.3X1.81X20 (A/C ACCUM BRKT)	97-02		1	11509051
29.		N.S.	INSULATOR, A/C ACCUM (BOTTOM) (POSN #2)				
30.	4-D10	9.196	BRACKET, A/C ACCUM	97-02	Y	1	10229475
31.	4-D10	9.195	INSULATOR, A/C ACCUM (SIDE) (POSN #1)	97-02	Y	1	10236219
32.	4-D10	9.195	ACCUMULATOR, A/C (AC-DELCO #15-1769)	97-00	Y	1	2724934
	4-D10	9.195	ACCUMULATOR, A/C (AC-DELCO #15-10082)	01-02	Y	1	1132765

cardiagn.com

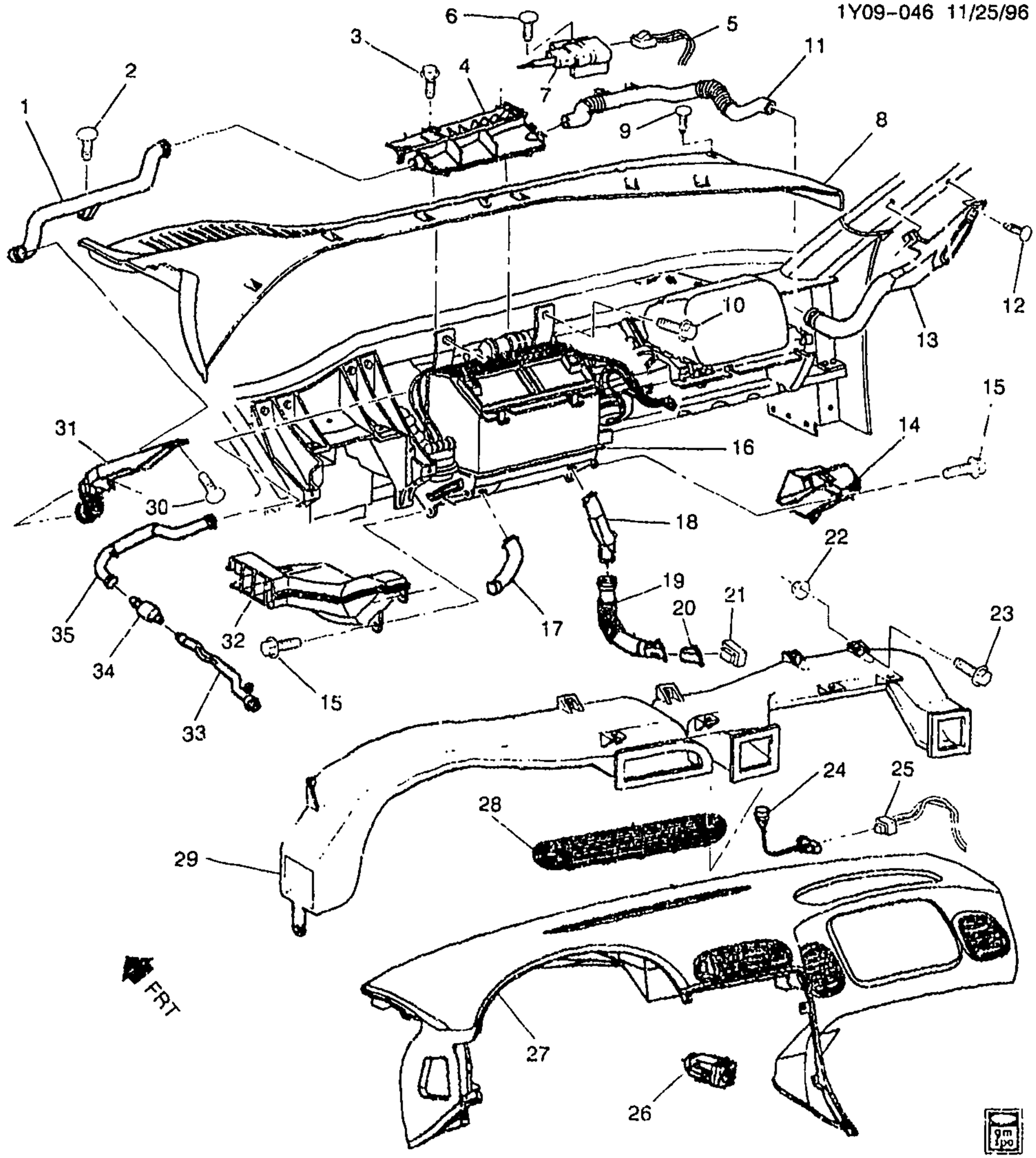

1Y09-046

1997-2002 Y A/C AIR DISTRIBUTION SYSTEM

1.	4-D28	9.780	DUCT, SI WDO DEFG OTLT (INBOARD) (POSN #1)	97-02	Y	LH 10229415
2.	4-D28	9.780	RETAINER, SI WDO DEFG OTLT DUCT (INBOARD-1, OUTBOARD-2) (BLACK) (4.8 HOLE) (14.685)	97-02	Y	LH 20538173

cardiagn.com

							1YC9-046
3.		8.913	SCREW, FL WA PAN HD, M6X1X25, TORX SOC MA. 9.8, PE (W/S DEFR NOZ)	97-02		2	11515631
4.	4-D28	9.779	DUCT, W/S DEFR NOZ	97-02	Y	1	10229414
5.	4-D27	9.770	CONNECTOR, SEN-AMB AIR TEMP (BLACK) (2-WAY F W/LEADS) (3.670) (AC-DELCO #PT374)	97-98	Y	1	12102747
	4-D27	9.770	CONNECTOR, SEN-O/S AIR TEMP (BLACK) (2-WAY F W/LEADS) (3.670) (AC-DELCO #PT374)	99-00	Y37	1	12102747
	4-D27	9.770	CONNECTOR, SEN-O/S AIR TEMP (BLACK) (2-WAY F W/LEADS) (3.670) (AC-DELCO #PT374)	00	Y07-67	1	12102747
6.		8.950	RETAINER, FITS .250 HOLE, 1.01LG.700-OD NYLON BLACK (AMB AIR TEMP SEN)	97-02		1	10121502
7.	4-D27	9.770	SENSOR, AMB AIR TEMP	97-02	Y (CJ2)	1	10248414
8.	4-N20	12.800	SCREEN, AIR INL (#86) (W/SEAL & FRM)	97	Y	1	10247327
	4-N20	12.800	SCREEN, AIR INL (#86)	97-02	Y	1	10446063
9.	4-N20	12.800	RETAINER, AIR INL SCRN (10.154)	97-02	Y	4	21075686
10.		8.900	BOLT, HEX W/CON WA, M6X1X20 (A/C EVPR & BLO MDL)	97-02		2	11514623
11.	4-D28	9.780	DUCT, SI WDO DEFG OTLT (INBOARD) (POSN #1)	97-02	Y	RH	10229416
12.	4-D28	9.780	RETAINER, SI WDO DEFG OTLT DUCT (PUSH IN) (OUTBOARD) (POSN #2) (BLACK) (4.8 HOLE) (14.685)	97-02	Y	RH	20538173
13.	4-D28	9.780	DUCT, SI WDO DEFG OTLT (OUTBOARD) (POSN #2)	97-02	Y	RH	10229418
14.	4-D12	9.262	DUCT, FLR AIR OTLT	97-02	Y	RH	10282421
15.	4-D12	9.262	BOLT, FLR AIR OTLT DUCT (4.2X2.25X16) (9.786)	97-02	Y	4	52466167
16.		N.S.	MODULE, HTR & A/C EVPR & BLO (FOR DETAILED ILLUSTRATION, SEE "A/C EVAP & BLO MODULE" ART IN GROUP 9)				
17.	4-D12	9.262	DUCT, FLR RR AIR OTLT	97-02	Y	LH	10282843
18.	4-D12	9.262	DUCT, FLR RR AIR OTLT	97-02	Y	RH	10282844
		N.S.	TAPE, FLR AIR OTLT DUCT (PROCURE LOCALLY)				
19.	4-D12	9.262	DUCT, FLR AIR OTLT RR (RIGHT SIDE ONLY)	97-02	Y	RH	10283464
20.	4-D12	9.262	OUTLET, FLR AIR INR HALF (BLACK)	97-00	Y (19I)	1	10403256
	4-D12	9.262	OUTLET, FLR AIR INR HALF (PEWTER)	97	Y (92I)	1	10403257
	4-D12	9.262	OUTLET, FLR AIR INR HALF (RED)	97-98	Y (94I)	1	10403258
	4-D12	9.262	OUTLET, FLR AIR INR HALF (PEWTER)	98-02	Y07-67 (92I)	1	10403257

cardiagn.com

	4–D12	9.262	OUTLET, FLR AIR INR HALF (CAMEL)	98–02	Y07–67 (67I)	1	10403259
	4–D12	9.262	OUTLET, FLR AIR INR HALF (RED)	99	Y07–67 (94I)	1	10403258
	4–D12	9.262	OUTLET, FLR AIR INR HALF (RED)	00–02	Y07–67 (70I)	1	10409411
	4–D12	9.262	OUTLET, FLR AIR INR HALF (BLACK)	01–02	Y07–67 (19I)	1	10403256
	4–D12	9.262	OUTLET, FLR AIR INR HALF (BLACK)	01–02	Y37 (19I, 70I)	1	10403256
21.	4–D12	9.262	OUTLET, FLR AIR OTR HALF (RED)	97	Y (94I)	1	10403253
	4–D12	9.262	OUTLET, FLR AIR OTR HALF (BLACK)	97–00	Y (19I)	1	10414489
	4–D12	9.262	OUTLET, FLR AIR OTR HALF (SHALE/PEWTER)	97	Y (92I)	1	10414490
	4–D12	9.262	OUTLET, FLR AIR OTR HALF (RED)	98–99	Y07–67 (94I)	1	10403253
	4–D12	9.262	OUTLET, FLR AIR OTR HALF (SHALE/PEWTER)	98–02	Y07–67 (92I)	1	10414490
	4–D12	9.262	OUTLET, FLR AIR OTR HALF (CAMEL)	98–02	Y07–67 (67I)	1	10414492
	4–D12	9.262	OUTLET, FLR AIR OTR HALF (RED)	00–02	Y07–67 (70I)	1	10409412
	4–D12	9.262	OUTLET, FLR AIR OTR HALF (BLACK)	01–02	Y07–67 (19I)	1	10414489
	4–D12	9.262	OUTLET, FLR AIR OTR HALF (BLACK)	01–02	Y37 (19I, 70I)	1	10414489
22.		8.929	WASHER, FL 7/32X1/2X5/8 1050 CAD HARD	97–02		5	2077521
23.		8.977	SCREW, HEX W/FL WA HI–LO TAP M4.2X1.41X16, 8–OD, BTHL PT, FLTD HRD, FL (AIR DISTR DUCT)	97–02		5	11508917
24.	4–D14	9.275	SENSOR, SUN LOAD TEMP (AC–DELCO #15–71849)	97–02	Y (CJ2)	1	16137340
25.		N.S.	HARNESS, I/P WRG (SEE GROUP 10 FOR DETAILED ILLUSTRATED VIEW)				
26.	4–D14	9.275	SENSOR, I/S AIR TEMP (AC–DELCO #15–72496)	97–02	Y	1	16267411
27.	4–N19	10.235	PAD, I/P UPR TR (W/ OTLTS & DUCTS) (BLACK)	97–02	Y (EXC UV6)	1	10303150
	4–N19	10.235	PAD, I/P UPR TR (BLACK)	97–98	Y	1	10406513
	4–N19	10.235	PAD, I/P UPR TR (LESS OTLTS & DUCTS) (BLACK)	97–02	Y (EXC UV6)	1	10443974
	4–N19	10.235	PAD, I/P UPR TR (INCLS BEZELS, DUCT & OUTLETS) (BLACK)	99–02	Y (UV6)	1	10303149
	4–N19	10.235	PAD, I/P UPR TR (BLACK)	99–00	Y (EXC UV6)	1	10406513
28.	4–D28	9.779	GRILLE, W/S DEFR NOZ (BLACK)	97–02	Y (CJ2)	1	10400366
	4–D28	9.779	GRILLE, W/S DEFR NOZ (BLACK)	97–02	Y (C60)	1	10400367
29.	4–D28	9.786	DUCT, AIR DISTR	97–02	Y	1	10229412

cardiagn.com

					Y09-046		
30.	4-D28	9.780	RETAINER, SI WDO DEFG OTLT DUCT (INBOARD-1, OUTBOARD-2) (BLACK) (4.8 HOLE) (14.685)	97-02	Y	LH	20538173
31.	4-D28	9.780	DUCT, SI WDO DEFG OTLT (OUTBOARD) (POSN #2)	97-02	Y	LH	10229417
		N.S.	TAPE, SI WDO DEFG OTLT DUCT (PROCURE LOCALLY)		.....		
32.	4-D12	9.262	DUCT, FLR AIR OTLT	97-02	Y	LH	10293194
33.	4-D14	9.275	DUCT, I/S AIR TEMP SEN ASPIRATOR (RR) (POSN #1)	97-02	Y07-67	1	10277871
		N.S.	TAPE, I/S AIR TEMP SEN ASPIRATOR DUCT (PROCURE LOCALLY)		.....		
34.	4-D14	9.275	MUFFLER, I/S AIR TEMP SEN ASPIRATOR (AC-DELCO #15-71626)	97-02	Y (CJ2)	1	1649040
35.	4-D14	9.275	DUCT, I/S AIR TEMP SEN ASPIRATOR (FRT)	97-02	Y07-67	1	10229466
		8.900	BOLT/SCREW, HEX W/FL WA 17 OD, M6X1X20, 9.8, 4345M, DOG PT (PROCURE LOCALLY)	97-02	.....	2	11515704

RPO DEFINITIONS
CJ2 - HVAC SYSTEM AIR CONDITIONER FRT, AUTO TEMP CONT, AUX TEMP CONT
C60 - AIR CONDITIONER,FRONT,MANUAL CONTROLS
UV6 - DISPLAY,HEADUP
19I - INTERIOR TRIM,BLACK
67I - INTERIOR TRIM,CAMEL
70I - INTERIOR TRIM,TORCH RED
92I - INTERIOR TRIM SHALE/PEWTER
94I - INTERIOR TRIM FIRETHORN RED (97)

cardiagn.com

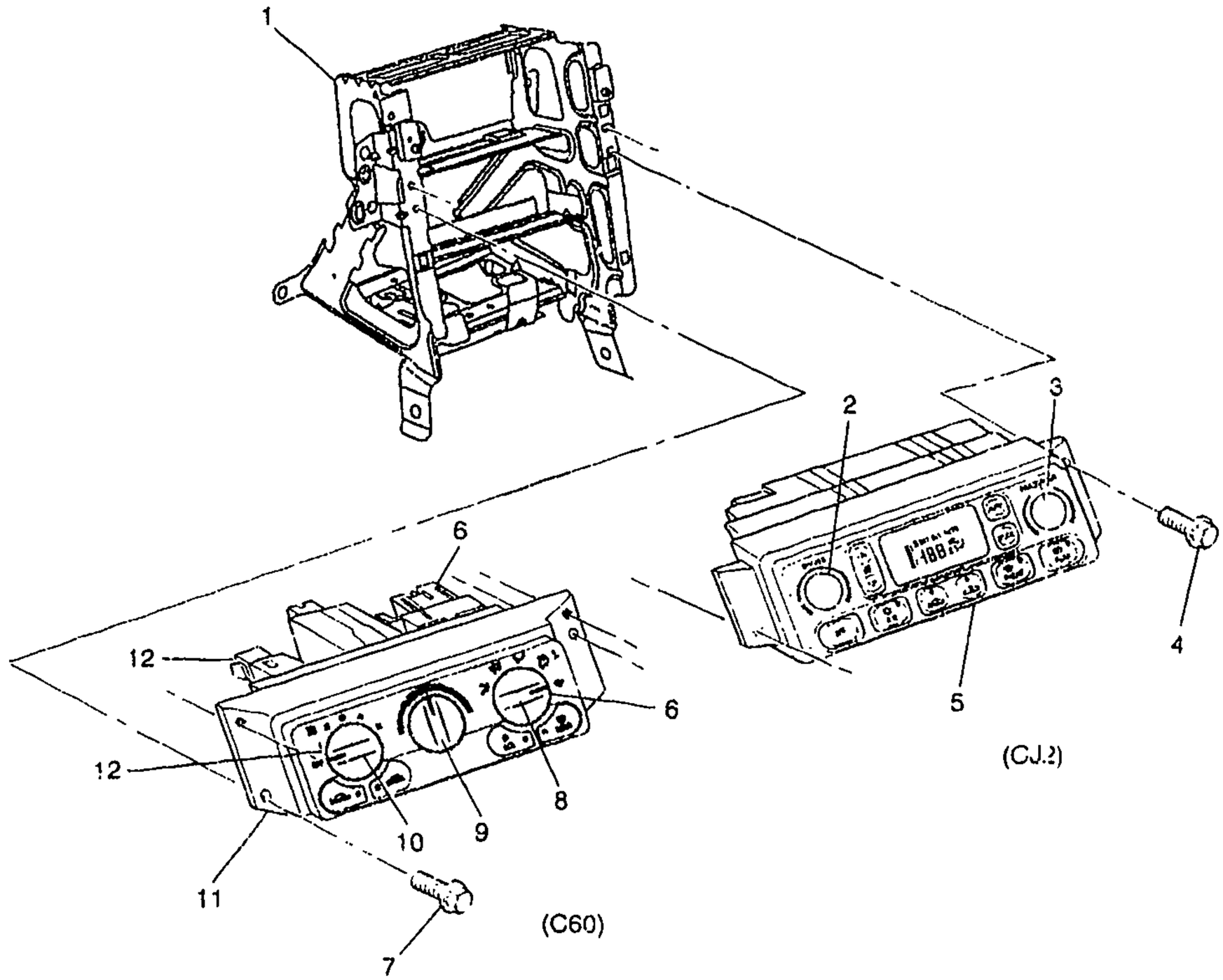

1Y09-047

1997-2002 Y A/C & HEATER CONTROL ASM (CJ2,C60)

1.	4-N18	10.230	BRACKET, I/P CTR SUPT	97-98	Y	1	10409654
	4-N18	10.230	BRACKET, I/P CTR SUPT	99-02	Y	1	10433229
2.	4-D15	9.278	KNOB, HTR & A/C CONT TEMP (DRVR) (PART OF 5)	97-02	Y	1	16226541
3.	4-D15	9.278	KNOB, HTR & A/C CONT TEMP (PASS) (PART OF 5)	97-02	Y	1	16226543
4.		8.977	SCREW, HEX W/FL WA M4.2X2.25X20 TAP POR (CJ2) ...	97-02	....	2	11508443
5.	4-D13	9.273	CONTROL, HTR & A/C (INCLS 2, 3) (AC-DELCO #15-72497)	97	Y (CJ2)	1	9356081
	4-D13	9.273	CONTROL, HTR & A/C (INCLS 2, 3) (AC-DELCO #15-72499)	98	Y (CJ2)	1	9352181
	4-D13	9.273	CONTROL, HTR & A/C (INCLS 2, 3) (AC-DELCO #15-72513)	99	Y (CJ2)	1	16254311
	4-D13	9.273	CONTROL, HTR & A/C (INCLS 2, 3) (AC-DELCO #15-72592)	00-02	Y (CJ2)	1	10436062

cardiagn.com

	4-D14	9.275	CONNECTOR, MDL-HTR, A/C PROGMR (BLACK) (7-WAY F) (W/LEADS) (10.163) (AC-DELCO #PT547)	97-02	Y	1	12125635
	4-D14	9.275	CONNECTOR, MDL-HTR, A/C PROGMR (12-WAY F W/LEADS) (9.715) (AC-DELCO #PT1128)	98-00	Y	1	15305996
	4-D14	9.275	CONNECTOR, MDL-HTR, A/C PROGMR (32-WAY F) (9.768)	02	YY67 (M30, CJ2, N37) (EXC T89)	1	12045470
	4-D14	9.275	CONNECTOR, MDL-HTR, A/C PROGMR (12-WAY FEMALE M/P 100 (W/LEADS) .) (12-WAY F W/LEADS) (9.715) (AC-DELCO #PT1128)	01-02	YY67	1	15305996
	4-D14	9.275	CONNECTOR, MDL-HTR, A/C PROGMR (32-WAY FEMALE M/P 100. SHIPPED BULK FROM PACKARD.) (32-WAY F) (9.768)	97-02	Y	1	12045470
	4-D14	9.275	CONNECTOR, MDL-HTR, A/C PROGMR (6-WAY FEMALE M/P 3MM (W/LEADS)) (6-WAY F, W/LEADS) (9.172) (AC-DELCO #PT590)	97-02	Y	1	12125678
6.	4-D14	9.275	SWITCH, HTR & A/C CONT SEL (PART OF 11) (W/VAC VLV) (8.850)	97-98	Y07-67 (C60)	1	16203804
	4-D14	9.275	SWITCH, HTR & A/C CONT SEL (PART OF 11) (W/VAC VLV) (8.850)	99	Y (C60)	1	16203804
		N.S.	SWITCH, HTR & A/C CONT SEL (PART OF 11)	00-02			
7.		8.977	SCREW, HEX W/FL WA M4.2X2.25X20 TAP POR (HTR & A/C CONT)	97-02		2	11508443
8.	4-D15	9.278	KNOB, HTR & A/C CONT MODE (PART OF 11)	97-02	Y (C60)	1	16230525
9.	4-D15	9.278	KNOB, HTR & A/C CONT TEMP (PART OF 11)	97-02	Y (C60)	1	16230525
10.	4-D15	9.278	KNOB, HTR & A/C CONT BLO SW (PART OF 11)	97-02	Y (C60)	1	16230525
11.	4-D13	9.273	CONTROL, HTR & A/C (INCLS 6, 8-10, 12) (AC-DELCO #15-72537)	97-98	Y (C60)	1	9366311
	4-D13	9.273	CONTROL, HTR & A/C (INCLS 6, 8-10, 12) (AC-DELCO #15-72537) (LABELED 9366311. FOR 2ND DES SEE 09370871)	99	Y (C60) (1ST DES)	1	9366311
	4-D13	9.273	CONTROL, HTR & A/C (INCLS 6, 8-10, 12) (AC-DELCO #15-72546) (LABELED 09370871. FOR 1ST DES SEE 09366311)	99	Y (C60) (2ND DES)	1	9370871
	4-D13	9.273	CONTROL, HTR & A/C (INCLS 6, 8-10 12) (AC-DELCO #15-72591)	00	Y (C60)	1	9380311
	4-D13	9.273	CONTROL, HTR & A/C (INCLS 6, 8-10, 12) (AC-DELCO #15-72690)	01-02	Y (C60)	1	10447750

cardiagn.com

							TY09-047
	4-D14	9.275	CONNECTOR, SW-HTR & A/C CONT SEL (3-WAY F) (W/LEADS) (10.150) (AC-DELCO #PT442)	97-98	Y	1	12117269
12.	4-D14	9.275	SWITCH, HTR & A/C CONT BLO (PART OF 11) (9.852) (AC-DELCO #15-5691)	97-99	Y (C60)	1	16203780
		N.S.	SWITCH, HTR & A/C CONT BLO (PART OF 11)	00-02	.....		

RPO DEFINITIONS
CJ2 – HVAC SYSTEM AIR CONDITIONER FRT, AUTO TEMP CONT, AUX TEMP CONT
C60 – AIR CONDITIONER,FRONT,MANUAL CONTROLS
M30 – TRANSMISSION,AUTOMATIC 4 SPEED,4L60E,ELECTRONIC
N37 – STEERING COLUMN,TILT AND TELESCOPING
T89 – LAMP,TAIL AND STOP(EXPORT)

cardiagn.com

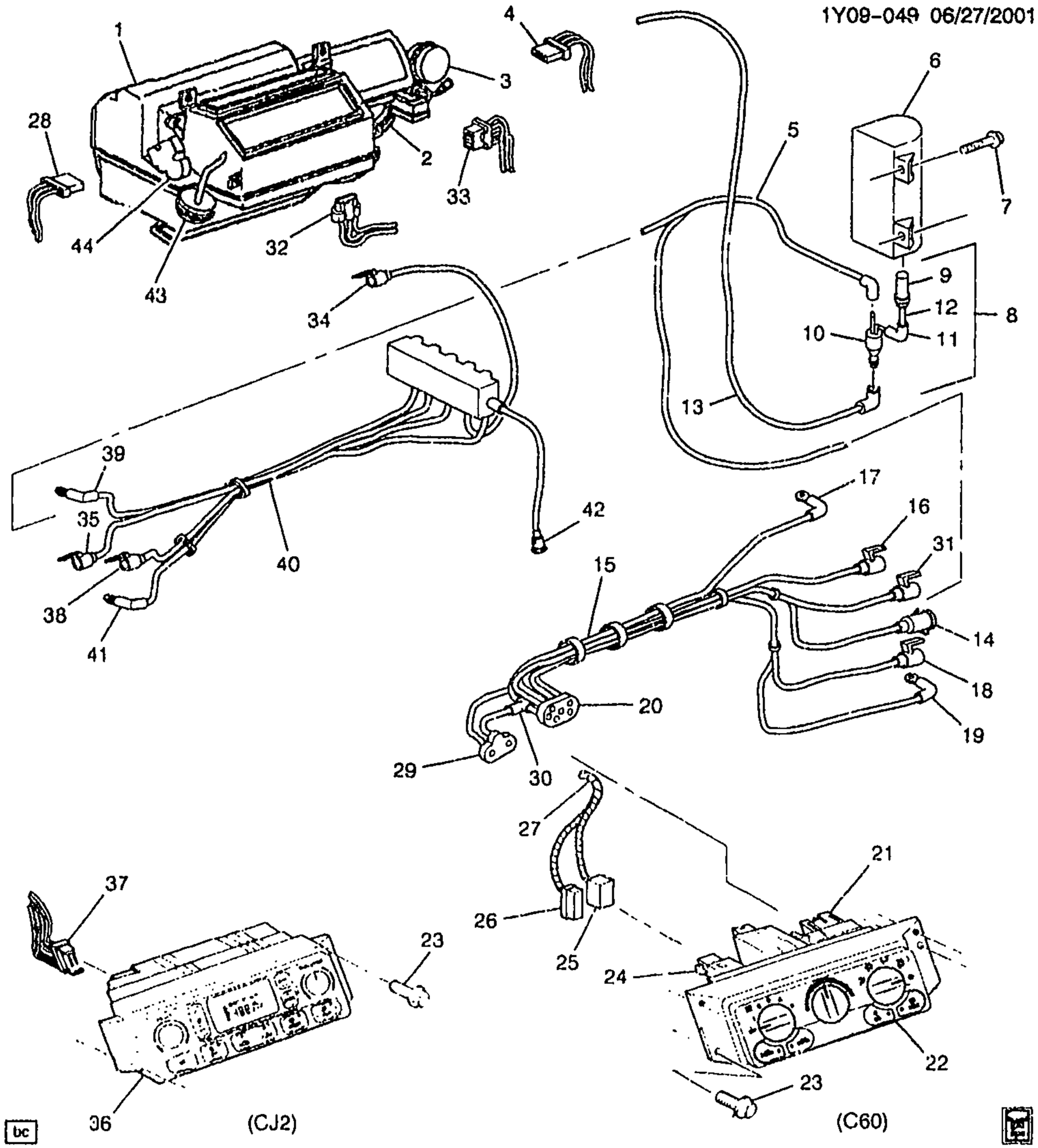

1997-2002 Y A/C CONTROL SYSTEM (ELECTRICAL & VACUUM)

1.		N.S.	MODULE, HTR & A/C EVPR & BLO (SEE "A/C EVAP & BLO MODULE" ILLUSTRATION FOR DETAILED ILLUSTRATED VIEW) .				
2.	4-D16	9.280	ACTUATOR, DEFR VLV (AC-DELCO #15-72605)	97-02	Y	1	52487593

cardiagn.com

							1Y09-049
3.	4-D16	9.280	ACTUATOR, AIR INL VLV (AC-DELCO #15-72280)	97-02	Y	1	52472512
4.	4-D16	9.280	CONNECTOR, MOT-MODE VLV ACTR (BLACK) (6-WAY F) (W/LEADS) (9.656) (AC-DELCO #PT319)	97-02	Y	1	12102632
	4-D16	9.280	CONNECTOR, MOT-MODE VLV ACTR (WHITE) (2-WAY F, W/LEADS) (2.535) (AC-DELCO #PT249)	98	Y	1	12101857
	4-D16	9.280	CONNECTOR, MOT-MODE VLV ACTR (BLACK) (6-WAY F) (W/LEADS) (9.656) (AC-DELCO #PT319)	02	YY67 (M30, CJ2, N37) (EXC T89)	1	12102632
5.	4-D17	9.281	HOSE, HTR & A/C CONT VAC TK (TO I/P) (ENG HARN SECTION) ..	97-02	Y (LS1)	1	12124136
	4-D17	9.281	HOSE, HTR & A/C CONT VAC TK (TO I/P) (ENG HARN SECTION) ..	01-02	Y (LS6)	1	12124136
6.	4-D17	9.281	TANK, HTR & A/C CONT VAC ...	97-02	Y	1	10188042
7.		8.977	SCREW, HEX W/FL WA M4.2X2.25X20 TAP POR (HTR & A/C CONT VAC TK)	97-02	.....	2	11508443
8.	4-D16	9.280	VALVE, HTR & A/C CONT VAC TK CHK	97-99	Y	1	10281311
	4-D16	9.280	VALVE, HTR & A/C CONT VAC TK CHK (3.670)	00-02	Y	1	460734
	4-D16	9.280	VALVE, HTR & A/C CONT VAC TK CHK (W/VALVES & CONNECTORS)	00-02	Y	1	10413345
9.		N.S.	CONNECTOR, HTR & A/C CONT VAC HARN (TANK SIDE)		.....		
10.	4-D16	9.280	VALVE, HTR & A/C CONT VAC SCE HOSE CHK (STAMPED 6648) (3.885) (AC-DELCO #14056648)	97-99	Y	1	14056648
	4-D16	9.280	VALVE, HTR & A/C CONT VAC SCE HOSE CHK (STAMPED 3271) (9.281)	00-02	Y	1	15733271
11.		8.963	CONNECTOR, VAC, M9.6 OD BOTH ENDS PLASTIC (VALVE SIDE)	97-02	.....	2	14062217
12.		N.S.	TUBE, NYLON (BETWEEN VAC HARN CONN & VAC HOSE CHK VLV)		.....		
13.	4-D17	9.281	HOSE, HTR & A/C CONT VAC TK (TO ENG) (ENG HARN SECTION)	97-02	Y (LS1)	1	12124136
	4-D17	9.281	HOSE, HTR & A/C CONT VAC TK (TO ENG) (ENG HARN SECTION)	01-02	Y (LS6)	1	12124136
14.		N.S.	CONNECTOR, VACUUM RESTRICTOR (MAIN SOURCE-INPUT)		.....		
15.	4-D17	9.281	HARNESS, HTR & A/C CONT VAC	97-02	Y (C60)	1	52482272
16.		N.S.	CONNECTOR, VACUUM (HTR, DEF VLV UPR HTR MODE)		....		
17.		N.S.	CONNECTOR, VACUUM (HTR, DEF VLV LWR DEF MODE)		.....		

cardiagn.com

						1Y09–049	
18.		N.S.	CONNECTOR, VACUUM (A/C VLV UPR HTR/DEF MODE)		.....		
19.		N.S.	CONNECTOR, VACUUM (A/C VLV LWR, A/C MODE)		.....		
20.		N.S.	CONNECTOR, MANIF VAC, ROUND, 6 PORT		.....		
21.	4–D14	9.275	SWITCH, HTR & A/C CONT SEL (PART OF 22) (W/VAC VLV) (8.850)	97–98	Y07–67 (C60)	1	16203804
	4–D14	9.275	SWITCH, HTR & A/C CONT SEL (PART OF 22) (W/VAC VLV) (8.850)	99	Y (C60)	1	16203804
		N.S.	SWITCH, HTR & A/C CONT SEL (PART OF 22)	00–02	.....		
22.	4–D13	9.273	CONTROL, HTR & A/C (INCLS 21, 24) (AC–DELCO #15–72537)	97–98	Y (C60)	1	9366311
	4–D13	9.273	CONTROL, HTR & A/C (INCLS 21, 24) (AC–DELCO #15–72537) (LABELED 9366311. FOR 2ND DES SEE 09370871) ...	99	Y (C60) (1ST DES)	1	9366311
	4–D13	9.273	CONTROL, HTR & A/C (INCLS 21, 24) (AC–DELCO #15–72546) (LABELED 09370871. FOR 1ST DES SEE 09366311)	99	Y (C60) (2ND DES)	1	9370871
	4–D13	9.273	CONTROL, HTR & A/C (INCLS 21, 24) (AC–DELCO #15–72591)	00	Y (C60)	1	9380311
	4–D13	9.273	CONTROL, HTR & A/C (INCLS 21, 24) (AC–DELCO #15–72690)	01–02	Y (C60)	1	10447750
23.		8.977	SCREW, HEX W/FL WA M4.2X2.25X20 TAP POR (HTR & A/C CONT VAC)	97–02	.....	2	11508443
24.	4–C11	8.849	SWITCH, HTR & A/C CONT BLO (PART OF 22) (8.852) (AC–DELCO #15–5691)	97–99	Y (C60)	1	16203780
		N.S.	SWITCH, HTR & A/C CONT BLO (PART OF 22)	00–02	.....		
25.		N.S.	CONNECTOR, MDL–HTR, A/C PROGMR		.....		
26.	4–D14	9.275	CONNECTOR, MDL–BLO MOT CONT (BLACK) (8–WAY F W/LEADS, 7–12GA & 4–18GA AS REQ) (2.535) (AC–DELCO #PT1346)	97–02	Y	1	15306189
27.	4–M14	2.480	HARNESS, I/P WRG (SEE GROUP 10.000 "INSTRUMENT PANEL PART 3" FOR DETAILED ILLUSTRATED VIEW)		....		
28.	4–D16	9.280	CONNECTOR, MOT–O/S AIR VLV ACTR (BLACK) (6 -WAY F) (W/LEADS) (9.656) (AC–DELCO #PT319)	97–02	Y	1	12102632

cardiagn.com

							1Y09-049
	4-D16	9.280	CONNECTOR, MOT-O/S AIR VLV ACTR (RR) (BLACK) (6-WAY M W/LEADS) (13.100) (AC-DELCO #PT1013)	01-02	YY67 (M30, CJ2, N37) (EXC T89)	1	15305872
29.		N.S.	CONNECTOR, VACUUM RECIRC		.....		
30.		N.S.	CONNECTOR, VACUUM TEE ...		.....		
31.		N.S.	CONNECTOR, VACUUM (AIR INLET VLV RECIRC)		.....		
32.	4-D14	9.275	CONNECTOR, MDL-HTR, A/C PROGMR (6-WAY F, W/LEADS) (9.172) (AC-DELCO #PT590) ...	97-02	Y	1	12125678
33.	4-D14	9.275	CONNECTOR, MDL-BLO MOT CONT (4-WAY F W/LEADS) (13.100) (AC-DELCO #PT1231) .	97-02	Y	1	15306069
34.		N.S.	CONN, AIR INLET VLV (RECIRC) (ORANGE)		.....		
35.		N.S.	CONNECTOR, VAC (A/C VLV LWR, A/C MODE) (BLUE)		.....		
36.	4-D13	9.273	CONTROL, HTR & A/C (REMAN) (AC-DELCO #15-72444)	97	Y (CJ2)	1	16256018
	4-D13	9.273	CONTROL, HTR & A/C (AC-DELCO #15-72497)	97	Y (CJ2)	1	9356081
	4-D13	9.273	CONTROL, HTR & A/C (AC-DELCO #15-72499)	98	Y (CJ2)	1	9352181
	4-D13	9.273	CONTROL, HTR & A/C (AC-DELCO #15-72513)	99	Y (CJ2)	1	16254311
	4-D13	9.273	CONTROL, HTR & A/C (AC-DELCO #15-72592)	00-02	Y (CJ2)	1	10436062
37.	4-D14	9.275	CONNECTOR, MDL-HTR, A/C PROGMR (32-WAY F) (9.768) ..	97-01	Y	1	12045470
38.		N.S.	CONNECTOR, HTR & A/C CONT VAC HARN (LWR DEF MODE) (YELLOW)		.....		
39.		N.S.	CONNECTOR, VAC (RESISTOR) (MAIN SOURCE INPUT) (VIOLET)		.....		
40.	4-D17	9.281	HARNESS, HTR & A/C CONT VAC	97-02	Y (CJ2)	1	52469694
	4-D17	9.281	HARNESS, HTR & A/C CONT VAC	97-02	Y (C60)	1	52482272
41.		N.S.	CONN, VAC (A/C VLV UPR HTR/DEFR MODE) (BROWN)		.....		
42.		N.S.	CONN, VAC (HTR/DEF VLV UPR HTR MODE) (RED)		.....		
43.	4-D16	9.280	ACTUATOR, MODE VLV (AC-DELCO #15-5579)	97	Y	1	52472511
	4-D16	9.280	ACTUATOR, MODE VLV (AC-DELCO #15-72647)	99-02	Y	1	52487750
	4-D16	9.280	ACTUATOR, MODE VLV (ACTUATOR HAS GOLD HARDWARE, FOR 1ST DES SEE 52472511) (AC-DELCO #15-72647)	98	Y (2ND DES)	1	52487750
	4-D16	9.280	ACTUATOR, MODE VLV (ACTUATOR HAS SILVER HARDWARE, FOR 2ND DES SEE 52482059) (AC-DELCO #15-5579)	98	Y (1ST DES)	1	52472511

cardiagn.com

							1Y09-049
44.	4-D16	9.280	ACTUATOR, TEMP VLV	97-02	Y (CJ2)	2	16163982
	4-D16	9.280	ACTUATOR, TEMP VLV (MODE & TEMP) (AC-DELCO #15-72634)	97-02	Y (C60)	1	16177412

RPO DEFINITIONS
CJ2 – HVAC SYSTEM AIR CONDITIONER FRT, AUTO TEMP CONT, AUX TEMP CONT
C60 – AIR CONDITIONER,FRONT,MANUAL CONTROLS
LS1 – ENGINE GAS, 8 CYL, 5.7L, SFI, ALUMINUM ENGINE
LS6 – ENGINE GAS, 8 CYL, 5.7L, SFI, ALUMINUM, HIGH OUTPUT
M30 – TRANSMISSION,AUTOMATIC 4 SPEED,4L60E,ELECTRONIC
N37 – STEERING COLUMN,TILT AND TELESCOPING
T89 – LAMP,TAIL AND STOP(EXPORT)

cardiagn.com

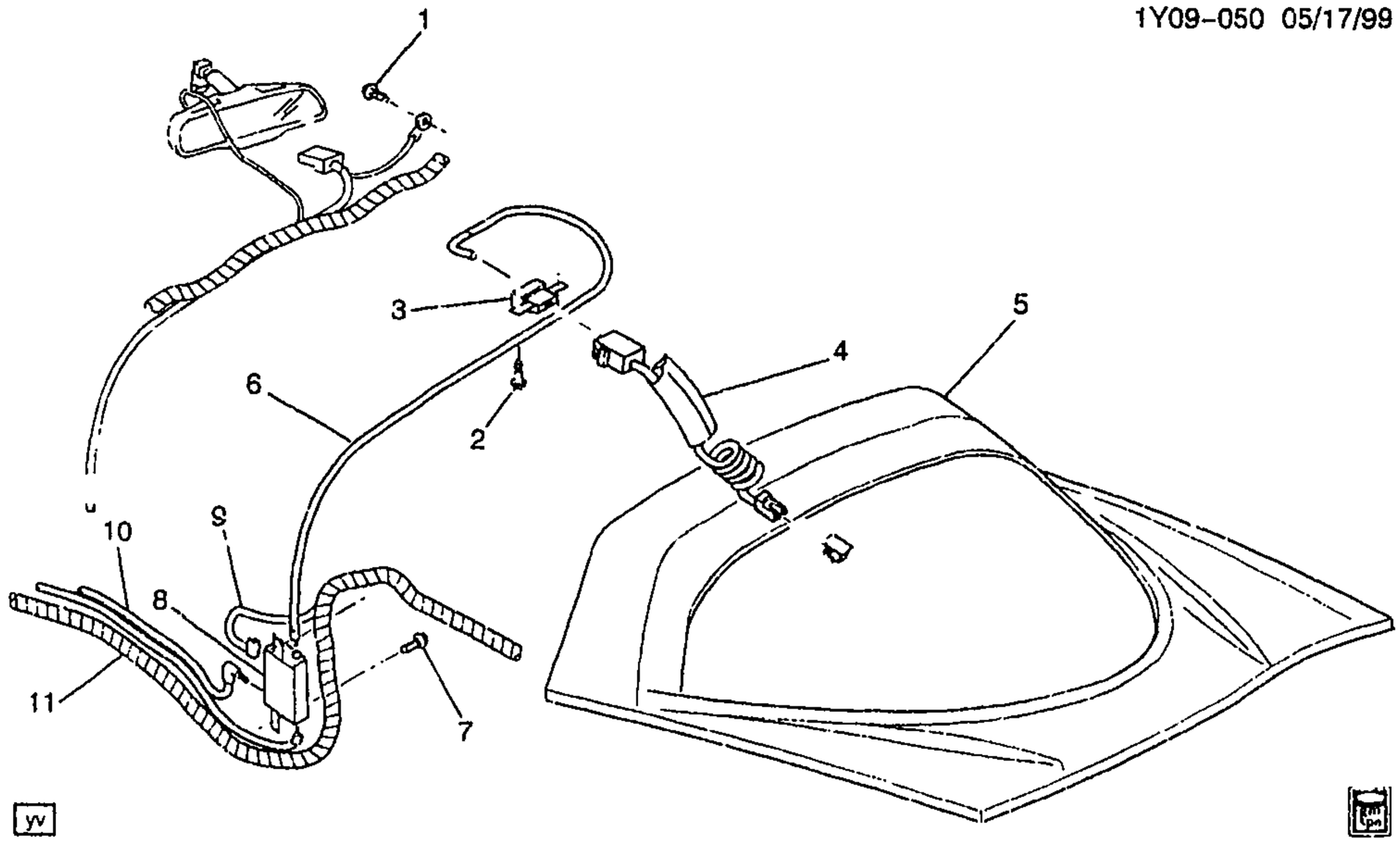

1Y09-050

1997-2002 Y07 ANTENNA ASM

1.		8.977	SCREW (HWH M4.2X1.41X13ZP) (RDO ANT CBL GND WIRE) (8.890)	97-02		1	22578495
2.		8.977	SCREW (HWH M4.2X1.41X13ZP) (RDO ANT MDL GRD) (8 890)	97-02		2	22578495
3.	4-D17	9.647	BUFFER, RDO ANT (ARS BUFFER MODULE ON ROOF BOW)	99-02	Y07 (UV7)	1	9351701
	4-D17	9.647	BUFFER, RDO ANT (ANT SIGNAL AMPLIF) (9.645) (AC-DELCO #16215951)	97-98	Y07 (UV7)	1	16215951
4.	4-D17	9.647	CABLE, RDO ANT (COILED CORD JMPR) (CONNECTS RR GLASS ANT TO RDO ANT AMP) (AC-DELCO #12189554)	97-02	Y07	1	12189554
5.	4-N20	12.181	PANEL, R/CMPT L/WDO	97-02	Y07	1	10400238
6.	4-D17	9.647	CABLE, RDO ANT CBL EXTN (AC-DELCO #10442965)	01-02	Y07 (UV7)	1	10442965
	4-D17	9.647	CABLE, RDO ANT CBL EXTN (CONNECTS RDO ANTENNA AMPLIF/BUFFER TO ARS MDL) (W/INTEGRAL CLIPS) (AC-DELCO #10280798)	97-00	Y07 (UV7)	1	10280798
7.		8.977	SCREW (HWH M4.2X1.41X13ZP) (RDO ANT MDL) (8.890)	97-02		2	22578495
8.	4-D17	9.645	MODULE, RDO ANT (AC-DELCO #16215481)	97-02	Y07 (UV7)	1	16215481

cardiagn.com

							1Y09-050
	4-D17	9.647	CONNECTOR, MDL-RDO ANT (3-WAY F, SLV/PIN, W/LEADS) (AC-DELCO #PT1077)	97-02	Y07	1	15305983
9.	4-N21	13.090	HARNESS, BODY FRT WRG	97-98	Y07	1	12189550
	4-N21	13.090	HARNESS, BODY FRT WRG	99-00	Y07 (EXC U1S)	1	12189597
	4-N21	13.090	HARNESS, BODY FRT WRG	99-00	Y07 (U1S)	1	12189889
	4-N21	13.090	HARNESS, BODY FRT WRG	01-02	YY07 (UZ6) (EXC U1S) .	1	15329382
	4-N21	13.090	HARNESS, BODY FRT WRG	01-02	YY07 (UZ6, U1S)	1	15329383
10.	4-D17	9.647	CABLE, RDO ANT (PART OF 11) (LGTH=3455) (AC-DELCO #12162815)	97-02	Y07	1	12162815
	4-D17	9.647	CABLE, RDO ANT (PART OF 11) (LGTH=2500) (AC-DELCO #12162816)	97-02	Y07	1	12162816
11.		N.S.	HARNESS, I/P WRG (INCLS COAXIAL CBLS ITEM 10) (SEE GROUP 10 FOR DETAILED ILLUSTRATED VIEW)		.....		

RPO DEFINITIONS
UV7 – ANTENNA, RR WINDOW, RADIO
UZ6 – SPEAKER SYSTEM 6, QUAD FRT DR MTD, DUAL QTR MTD
U1S – PLAYER MULTIPLE COMPACT DISC

cardiagn.com

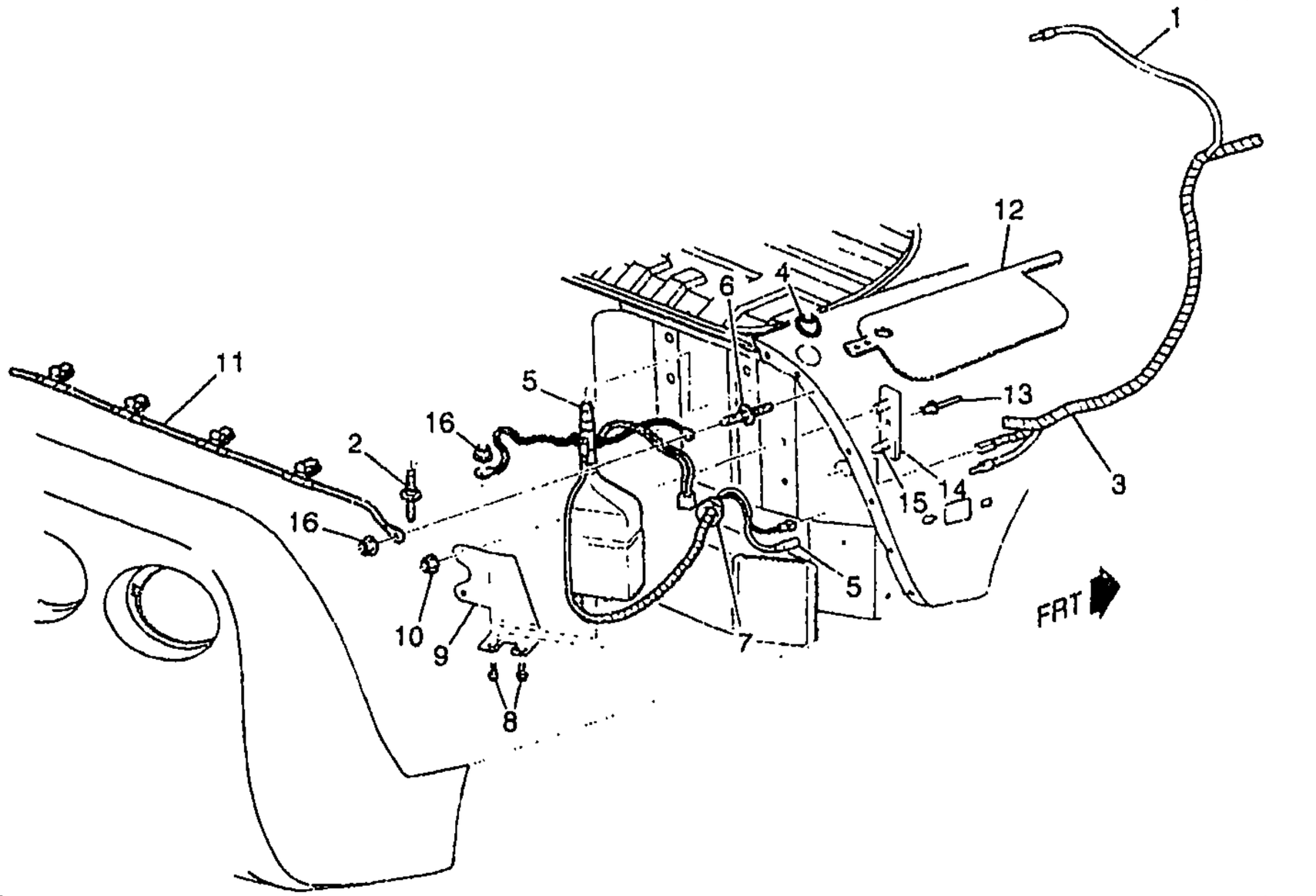

bc

1Y09-052

1998-2002 Y67 ANTENNA ASM

1.	4-D17	9.647	CABLE, RDO ANT (3825MM LONG) (AC-DELCO #12186127)	98	Y67 (UZ6)	1	12186127
	4-D17	9.647	CABLE, RDO ANT (4140MM LONG) (AC-DELCO #15324139)	98-02	Y67 (UZ6)	1	15324139
2.	4-D17	9.647	STUD, RDO ANT (ANTENNA GROUND) (2.559)	98-02	Y67	1	10278878
3.	4-N21	13.090	HARNESS, BODY FRT WRG	98	Y67 (UZ6)	1	12189958
	4-N21	13.090	HARNESS, BODY FRT WRG	99-00	Y67 (EXC U1S)	1	12189599
	4-N21	13.090	HARNESS, BODY FRT WRG	99-00	Y67 (U1S)	1	12189962
	4-N21	13.090	HARNESS, BODY FRT WRG	01-02	YY67 (UZ6) (EXC U1S) .	1	15329386
	4-N21	13.090	HARNESS, BODY FRT WRG	01-02	YY67 (UZ6, U1S)	1	15329387
	4-D21	9.656	CONNECTOR, INLINE-TO PWR ANT (3-WAY M W/LEADS) (2.530) (AC-DELCO #PT504) ...	98-02	Y	1	12117371
4.	4-D17	9.647	BEZEL, RDO PWR ANT (AC-DELCO #10275746)	98	Y67 (U75)	1	10275746
	4-D17	9.647	BEZEL, RDO PWR ANT (AC-DELCO #10275746)	99-02	Y37-67	1	10275746
	4-D17	9.647	BEZEL, RDO PWR ANT (AC-DELCO #10275746)	02	YY37-67 (U73, U75) ..	1	10275746
5.	4-D17	9.647	ANTENNA, RDO (W/GND STRPS) (AC-DELCO #10285495)	98-02	Y67 (U75)	1	10285495

cardiagn.com

							1Y09-052
6.		8.900	BOLT/SCREW, HEX W/FL WA 17 CD, M6X1X20, 9.8, 4345M, DOG PT (RR BPR FASCIA) (GRD STRP TERM TO RDO NOISE SUPPR SHLD TAB)	98-02	.....	1	11515704
7.		N.S.	SEALER, RDO PWR ANT WRG HARN GROM		.....		
		N.S.	LUBRICANT, RDO PWR ANT WRG HARN		.....		
8.	4-D17	9.647	BOLT, RDO PWR ANT BRKT (AC-DELCO #11514297)	98-02	Y67 (U75)	2	11514297
9.	4-D17	9.647	BRACKET, RDO PWR ANT	98-02	Y67 (U75)	1	10275748
10.		8.917	NUT, HFH M6X1X6.5 ZOR 9 (RDO ANT BRKT)	98-02	.....	2	3530297
11.	4-D17	9.647	STRAP, RDO ANT CBL (INCLS 12)	99-02	Y37-67 (U73, U75) ...	1	12189867
	4-D17	9.647	STRAP, RDO ANT CBL (2-WIRE ANT CBL STRAP) (INCLS 12) (W/SHIELD & CLIPS)	98	Y67 (U75)	1	12189867
12.		N.S.	STRAP, RDO ANT CBL (PART OF 11)		.....		
13.		N.S.	RIVET, RDO PWR ANT BRKT STUD PLT		.....		
14.	4-D17	9.647	PLATE, RDO PWR ANT BRKT STUD (12.980)	98	Y67 (U75)	1	10264812
	4-D17	9.647	PLATE, RDO ANT BRKT STUD (12.980)	99-02	Y67	1	10264812
		N.S.	ADHESIVE, RDO PWR ANT BRKT STUD		.....		
15.		N.S.	STUD, BODY UPR RR PNL SUPT (ANT BRKT ANC)		.....		
16.		8.917	NUT, HFH M6X1X6.5 ZOR 9 (RDO PWR ANT GND STRP)	98-02	.....	1	3530297

RPO DEFINITIONS
UZ6 – SPEAKER SYSTEM 6, QUAD FRT DR MTD, DUAL QTR MTD
U1S – PLAYER MULTIPLE COMPACT DISC
U73 - ANTENNA,FIXED
U75 – ANTENNA,POWER(CHROME)

cardiagn.com

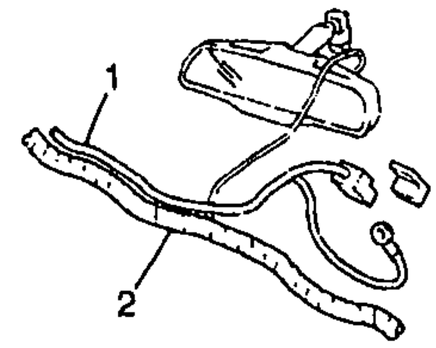

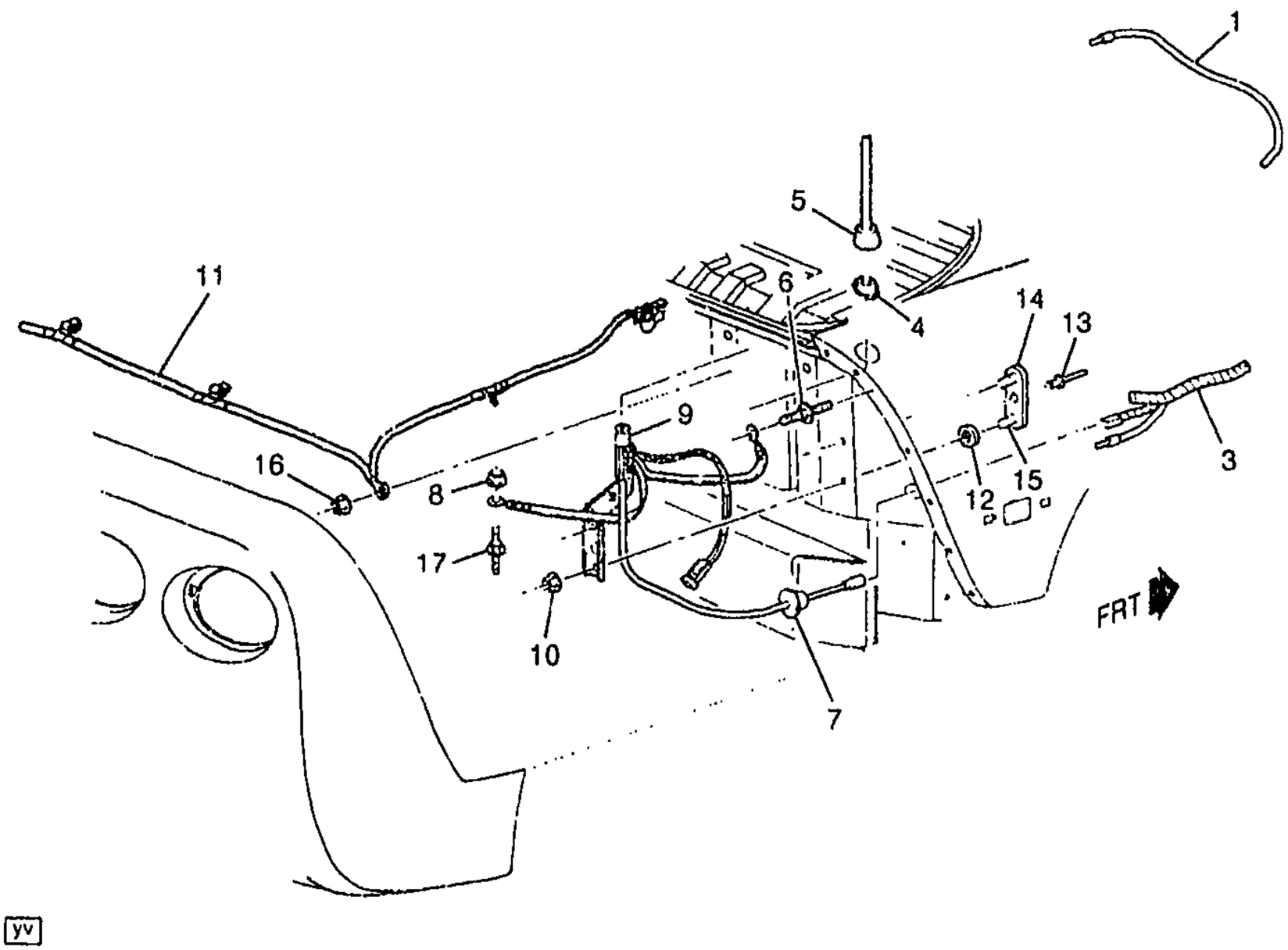

yv

1Y09-056

1999-2002 Y37 ANTENNA ASM

1.	4-D17	9.647	CABLE, RDO ANT (PART OF 3) (4140MM LONG) (AC-DELCO #15324139)	99-02	Y37	1	15324139
2.	4-M14	2.480	HARNESS, I/P WRG (SEE GROUP 10 FOR DETAILED ILLUSTRATED VIEW)		.....		
3.	4-N21	13.090	HARNESS, BODY FRT WRG (INCLS 1)	99-00	Y37 (U1S)	1	12163772
	4-N21	13.090	HARNESS, BODY FRT WRG (INCLS 1)	99-00	Y37 (EXC U1S)	1	12189595

cardiagn.com

							1Y09-056
	4-N21	13.090	HARNESS, BODY FRT WRG (INCLS 1)	01-02	YY37	1	15329378
4.	4-D17	9.647	BEZEL, RDO PWR ANT (AC-DELCO #10275746)	99-02	Y37-67	1	10275746
	4-D17	9.647	BEZEL, RDO PWR ANT (AC-DELCO #10275746)	02	YY37-67 (U73, U75)	1	10275746
5.	4-D17	9.647	ANTENNA, RDO (MAST) (3/4" SHORT BASE) (W/O DIMPLE) (AC-DELCO #10289035)	99-02	Y37 (U73)	1	10289035
6.		8.900	BOLT/SCREW, HEX W/FL WA 17 OD, M6X1X20, 9.8, 4345M, DOG PT (RR BPR FASCIA) (GRD STRP TERM TO RDO NOISE SUPPR SHLD TAB)	99-02		1	11515704
7.		N.S.	GROMMET RDO ANT (IN RR CMPT PNL)				
		N.S.	SEALER, RDO PWR ANT WRG HARN GROM				
		N.S.	LUBRICANT, RDO PWR ANT WRG HARN				
8.		8.917	NUT, HFH M6X1X6.5 ZOR 9 (RDO PWR ANT GND STRP)	99-02		1	3530297
9.	4-D17	9.647	BRACKET, RDO ANT (INCLS STUD ASM. BRACKET, GROUND STRAPS & GROUND STRAP BOLT)	99-02	Y37 (U73)	1	10282230
10.		8.917	NUT, HFH M6X1X6.5 ZOR 9 (RDO ANT BRKT) (TO STUD PLT ASM)	99-02		2	3530297
11.	4-D17	9.647	STRAP, RDO ANT CBL	99-02	Y37-67 (U73, U75)	1	12189867
12.	4-D17	9.647	SEAL, RDO PWR ANT BRKT STUD PLT (15.222)	99-02	Y37-67	2	10415038
13.		N.S.	RIVET, RDO PWR ANT BRKT STUD PLT				
14.	4-D17	9.647	PLATE, RDO ANT BRKT STUD (12.980)	99-02	Y37	1	10264812
		N.S.	ADHESIVE, RDO PWR ANT BRKT STUD				
15.		N.S.	STUD, BODY UPR RR PNL SUPT (ANT BRKT ANC)				
16.		8.917	NUT, HFH M6X1X6.5 ZOR 9 (RDO GND WIRE)	99-02		1	3530297
17.	4-D17	9.647	STUD, RDO ANT (ANTENNA GROUND) (2.559)	99-02	Y37	1	10278878

RPO DEFINITIONS
U1S - PLAYER MULTIPLE COMPACT DISC
U73 - ANTENNA,FIXED
U75 - ANTENNA,POWER(CHROME)

cardiagn.com

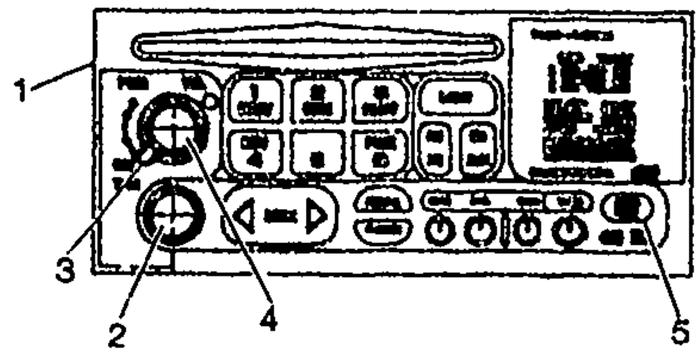

(UNO)

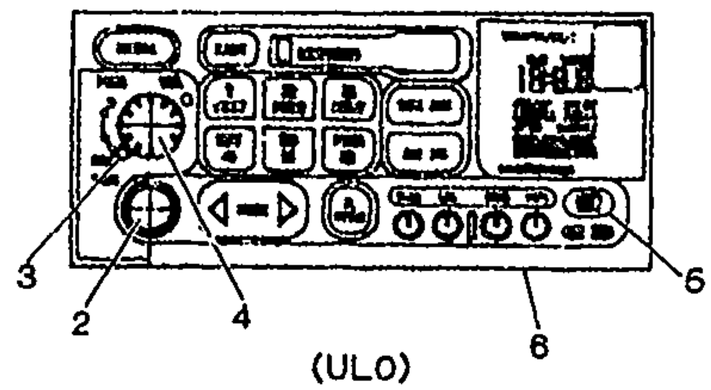

(ULO)

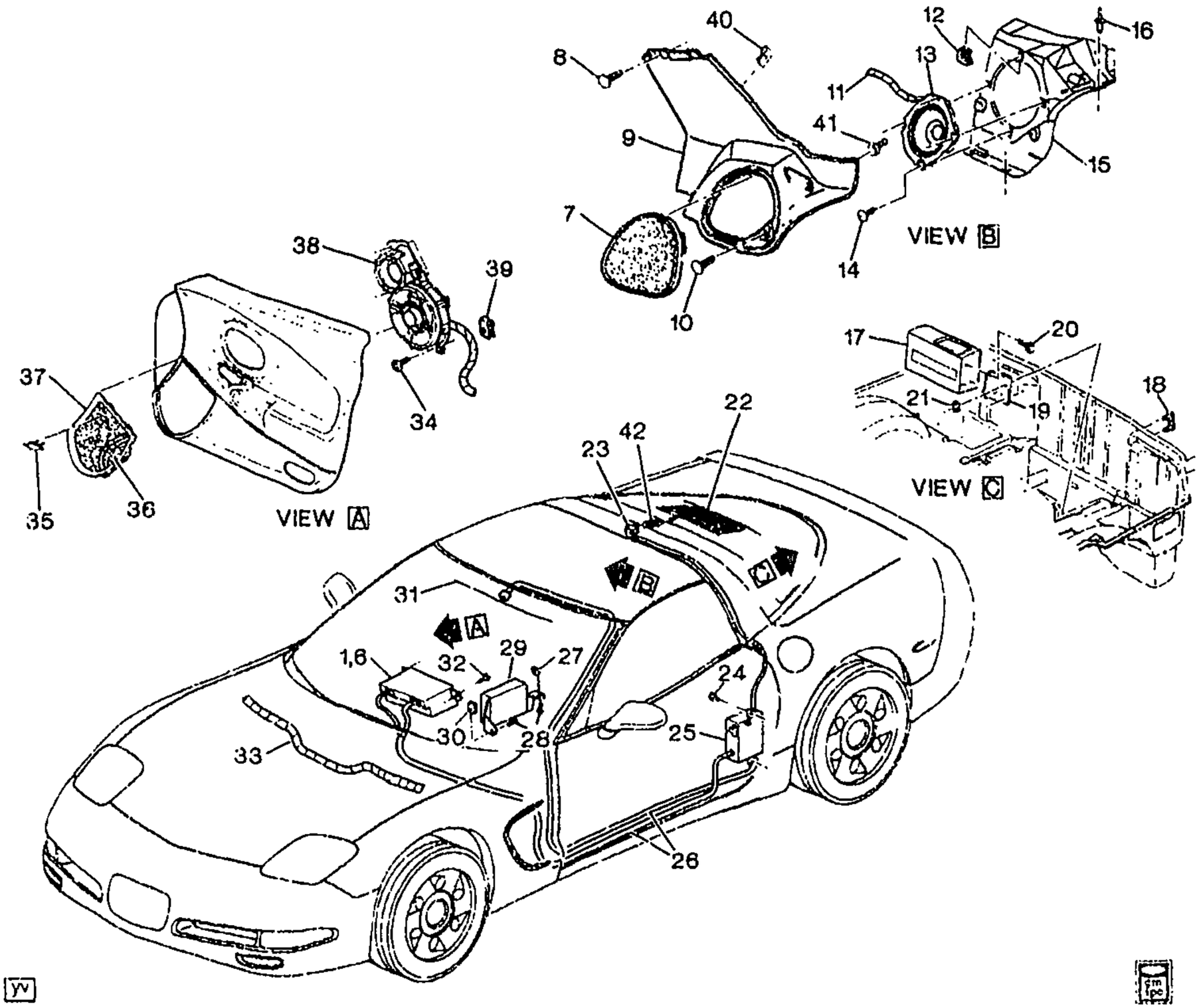

1Y09-051

1997-2002 Y07 AUDIO SYSTEM

1.	4-D20	9.650	RADIO, AM/FM STEREO & CLK & CD PLYR (AC-DELCO #16257601)	97-99	Y (UNO, UZ6)	1	16257601
	4-D20	9.650	RADIO, AM/FM STEREO & CLK & CD PLYR (AC-DELCO #9390211)	00-02	Y (UNO, UZ6)	1	9390211

© 2001 GENERAL MOTORS SERVICE PARTS OPERATIONS--CHEVROLET-15Y

cardiagn.com

2.	4-D18	9.649	KNOB, RDO TUNING CONT (AC-DELCO #16195409)	97-98	Y (UL0, UZ6, UN0)	1	16195409
	4-D18	9.649	KNOB, RDO TUNING CONT (AC-DELCO #16195409)	99-02	Y (UL0, UZ6, UN0, UQ5)	1	16195409
3.	4-D18	9.649	KNOB, RDO SPKR CONT (AC-DELCO #16195412)	97-02	Y	2	16195412
4.	4-D18	9.649	KNOB, RDO VOL CONT (WING) (SPD CONT VOL) (AC-DELCO #16189159)	97-98	Y (UL0, UZ6, UN0)	1	16189159
	4-D18	9.649	KNOB, RDO VOL CONT (AC-DELCO #16195410)	97-98	Y (UL0, UZ6, UN0)	1	16195410
	4-D18	9.649	KNOB, RDO VOL CONT (WING) (SPD CONT VOL) (AC-DELCO #16189159)	99-02	Y (UL0, UZ6, UN0, UQ5)	1	16189159
	4-D18	9.649	KNOB, RDO VOL CONT (AC-DELCO #16195410)	99-01	Y (UL0, UZ6, UN0, UQ5)	1	16195410
	4-D18	9.649	KNOB, RDO VOL CONT (AC-DELCO #16195410)	0[illegible]	Y (UL0, UZ6) (EXC UL2)	1	16195410
	4-D18	9.649	KNOB, RDO VOL CONT (SPD CONT VOL) (AC-DELCO #16234005)	00-02	Y (UL0, UL2, UZ6) (EXPORT)	1	16234005
	4-D18	9.649	KNOB, RDO VOL CONT (AC-DELCO #16234117)	00-02	Y (UL0, UL2, UZ6) (EXPORT)	1	16234117
5.	4-D18	9.649	KNOB, RDO TONE CONT (AC-DELCO #16195412)	97-02	Y	2	16195412
6.	4-D20	9.650	RADIO, AM/FM STEREO & CLK & T/PLYR (AC-DELCO #16257631)	97-99	Y (UL0, UZ6) (EXC UK1, UL2)	1	16257631
	4-D20	9.650	RADIO, AM/FM STEREO & CLK & T/PLYR (AC-DELCO #9390231)	00-02	Y (UL0, UZ6) (EXC UK1, UL2)	1	9390231
	4-D20	9.650	RADIO, AM/FM STEREO & CLK & T/PLYR (AC-DELCO #16257611)	97-99	Y (UL0, UL2, UZ6) (EXPORT)	1	16257611
	4-D20	9.650	RADIO, AM/FM STEREO & CLK & T/PLYR (AC-DELCO #16257621)	97-99	Y (UK1, UL0, UZ6) (EXPORT)	1	16257621
	4-D20	9.650	RADIO, AM/FM STEREO & CLK & T/PLYR (AC-DELCO #9390221)	00-02	Y (UK1, UL0, UZ6) (EXPORT)	1	9390221
	4-D20	9.650	RADIO, AM/FM STEREO & CLK & T/PLYR (AC-DELCO #9390241)	00-02	Y (UL0, UL2, UZ6) (EXPORT)	1	9390241
7.	4-D22	9.665	GRILLE, RDO RR SPKR (BLACK)	97-02	Y07	2	10287668
8.	4-N26	15.222	RETAINER, R/CMPT SI T/PNL (PUSH IN) (POSN #4) (PAINT TO MATCH) (FITS .18 HOLE, .7 LG, .43 OD, NYLON) (14.630)	97-02	Y	2	20540336
9.	4-N26	15.222	PANEL, R/CMPT SI TR (INCLS 40, 41)	97-02	Y07	RH	10407543
	4-N26	15.222	PANEL, R/CMPT SI TR (INCLS 40, 41)	97-02	Y07	LH	10407544
10.	4-N26	15.222	RETAINER, R/CMPT SI T/PNL (PUSH IN) (POSN #6) (8.154)	97-02	Y07	2	332364
11.	4-N21	13.090	HARNESS, BODY FRT WRG	97-98	Y07	1	12189550
	4-N21	13.090	HARNESS, BODY FRT WRG	99-00	Y07 (EXC U1S)	1	12189597
	4-N21	13.090	HARNESS, BODY FRT WRG	99-00	Y07 (U1S)	1	12189889
	4-N21	13.090	HARNESS, BODY FRT WRG	01-02	YY07 (UZ6) (EXC U1S)	1	15329382

cardiagn.com

							1Y09-051
	4-N21	13.090	HARNESS, BODY FRT WRG	01-02	YY07 (UZ6, U1S)	1	15329383
	4-D21	9.656	CONNECTOR, SPKR-RDO (GRAY) (2-WAY F W/LEADS) (INDEX TAB CTR CAVITY A&B) (2.535) (AC-DELCO #PT217) ...	97-02	Y	2	12101825
	4-D24	9.670	CONNECTOR, PLYR-CD (BLACK) (10-WAY F) (W/LEADS) (2.535) (AC-DELCO #PT108) ...	97-02	Y	1	12085486
	4-D21	9.656	CONNECTOR, INLINE--TO CD PLYR (3-WAY M W/LEADS) (2.530) (AC-DELCO #PT504) ...	99-00	Y	1	12117371
12.		8.927	O-RING, 1/2 TUBE O .D., INSIDE DIA .364 (A), .094 (B), .005 (C), .003 (D) (A/C EVAP TUBE (O RING)) (AC-DELCO #15-3984)	97-02	.....	2	52454645
13.	4-D22	9.665	SPEAKER, RDO RR (BEHIND B PILLAR FORWARD OF WHL WELL 6" TWIDDLER BOSE) (AC-DELCO #10290828)	97-02	Y07 (UZ6)	2	10290828
14.		8.977	SCREW, HEX W/FL WA M4.2X2.25X20 TAP POR (RDO RR SPKR)	97-02	.....	8	11508443
15.	4-D22	9.665	HOUSING, RDO RR SPKR (MTS SPKR)	97-02	Y07	LH	10288371
	4-D22	9.665	HOUSING, RDO RR SPKR (MTS SPKR)	97-02	Y07	RH	10288372
16.	4-N20	12.187	RIVET, R/CMPT L/WDO STRUT BODY SI BRKT (FOR 3/16" HOLE W/ 1/4" GRIP) (9.665) (AC-DELCO #15690531)	97-02	Y07	2	15690531
17.	4-D24	3.670	PLAYER, AUDIO DISC (VERT MNT) (AC-DELCO #25685332) .	97-02	Y (U1S)	1	25685332
	4-D24	9.670	CARTRIDGE, CD/PLYR (12 DISC) (AC-DELCO #25678545)	97-02	Y (U1S)	1	25678545
18.	4-D24	9.670	PLATE, CD/PLYR BRKT STUD (12.980)	97-02	Y (U1S)	2	10264812
19.	4-D23	9.667	BRACKET, AUDIO DISC PLYR (9.670) (AC-DELCO #10291941)	97-02	Y (U1S)	LH	10291941
	4-D23	9.667	BRACKET, AUDIO DISC PLYR (9.670) (AC-DELCO #10291942)	97-02	Y (U1S)	RH	10291942
20.		8.900	BOLT-HFH, M4X0.7X6, 5.3 THD, 9.2 OD, GM500 (4.8), PC, MACH (CD/PLYR) (AC-DELCO #11503044)	97-02	.....	6	11503044
21.		8.917	NUT, HFH M6X1X6.5 ZOR 9 (AUDIO DISC PLYR)	97-02	.....	4	3530297
22.		N.S.	ANTENNA, RR GLASS) (PART OF GLASS)		.....		
23.	4-D17	9.647	BUFFER, RDO ANT (ARS BUFFER MODULE ON ROOF BOW)	99-02	Y07 (UV7)	1	9351701
	4-D17	9.647	BUFFER, RDO ANT (ANT SIGNAL AMPLIF) (9.645) (AC-DELCO #16215951)	97-98	Y07 (UV7)	1	16215951
24.		8.977	SCREW (HWH M4.2X1.41X13ZP) (RDO ANT MDL) (8.890)	97-02	....	2	22578495

cardiagn.com

							1Y09-051
25.	4-D17	9.645	MODULE, RDO ANT (AC-DELCO #16215481)	97-02	Y07 (UV7)	1	16215481
26.	4-D17	9.647	CABLE, RDO ANT (COAXIAL CABLES) (PART OF I/P HARN) (LGTH=3455) (AC-DELCO #12162815)	97-02	Y07	1	12162815
	4-D17	9.647	CABLE, RDO ANT (COAXIAL CABLES) (PART OF I/P HARN) (LGTH=2500) (AC-DELCO #12162816)	97-02	Y07	1	12162816
27.	4-D22	9.665	NUT, RDO SPKR AMPF BRKT (POSN #2) (FASTENS RDO SPKR AMPLFR TO STRG COL. BRKT) (4.2X1.41 TAPPING) (SPL) (3.430)	97-02	Y	1	25536302
28.		8.977	SCREW, HEX W/FL WA M4.2X2.25X20 TAP POR (3 1/2" FRT DR TWIDDLER)	97-02	.....	2	11508443
29.	4-D20	9.650	AMPLIFIER, RDO SPKR (BOSE AUDIO SYSTEM) (AC-DELCO #10290827)	97-02	Y07 (UZ6)	1	10290827
30.		8.921	NUT, U TYPE, MULTI THD, PREV TORQ, M4.2X1.41TAP, 8.1REACH, 0.65-3.80 PNLS 1065 PZOR (POSN #1) (FASTENS RDO SPKR AMPLFR TO STRG COL BRKT) (AC-DELCO #11513599)	97-02	.....	1	11513599
31.		N.S.	ANTENNA, FRT W/SHIELD (PART OF GLASS)		.....		
32.		8.977	SCREW, HEX W/FL WA M4.2X2.25X20 TAP POR (RDO) ..	97-02	.....	2	11508443
33.		N.S.	HARNESS, I/P WRG (SEE GROUP 10 FOR DETAILED ILLUSTRATED VIEW)		.....		
	4-D21	9.656	CONNECTOR, RDO (NATURAL) (9-WAY F, W/LEADS) (4.329) (AC-DELCO #PT315)	97-02	Y	1	12102628
	4-D21	9.656	CONNECTOR, RDO (NATURAL) (4-WAY) (W/LEADS) (AC-DELCO #PT323)	97-02	Y	1	12102636
	4-D21	9.656	CONNECTOR, RDO (WHITE) (10-WAY F) (W/LEADS) (AC-DELCO #PT582)	97-02	Y	1	12125670
	4-D21	9.656	CONNECTOR, RDO (10-WAY FEMALE M/P 100 (W/LEADS) .) (BLACK) (10-WAY F) (W/LEADS) (2.535) (AC-DELCO #PT108) ...	97-02	Y	1	12085486
	4-D20	9.650	CONNECTOR, MDL-RDO CONT (GRAY) (24-WAY F) (4.720) (AC-DELCO #12110088)	97-02	Y07	1	12110088
	4-D20	9.650	CONNECTOR, MDL-RDO CONT (BLACK) (6-WAY F) (W/LEADS) (9.656) (AC-DELCO #PT319) ...	01-02	YY07	1	12102632
	4-D20	9.650	CONNECTOR, MDL-RDO CONT (24-WAY FEMALE W/O LEADS) (BLUE) (24-WAY F W/O LEADS) (3.670)	98-02	Y	1	12110206

cardiagn.com

							1Y09-051
34.		8.977	SCREW, HEX W/FL WA M4.2X2.25X20 TAP POR (RDO FRT SPKR)	97-02		12	11508443
35.	4-D22	9.665	EMBLEM, RDO FRT S/D SPKR GRL	97-02	Y (UZ6)	2	10291759
36.	4-D22	9.665	SCREEN, RDO FRT S/D SPKR	97-02	Y	LH	10291755
	4-D22	9.665	SCREEN, RDO FRT S/D SPKR	97-02	Y	RH	10291756
37.	4-D22	9.665	GRILLE, RDO FRT S/D SPKR (BLACK)	97-00	Y (UZ6, 19I)	RH	10274045
	4-D22	9.665	GRILLE, RDO FRT S/D SPKR (BLACK)	97-00	Y (UZ6, 19I)	LH	10274046
	4-D22	9.665	GRILLE, RDO FRT S/D SPKR (PEWTER)	97-98	Y (UZ6, 92I)	RH	10274047
	4-D22	9.665	GRILLE, RDO FRT S/D SPKR (PEWTER)	97-98	Y (UZ6, 92I)	LH	10274048
	4-D22	9.665	GRILLE, RDO FRT S/D SPKR (RED)	97-98	Y (94I)	RH	10274049
	4-D22	9.665	GRILLE, RDO FRT S/D SPKR (RED)	97-98	Y (94I)	LH	10274050
	4-D22	9.665	GRILLE, RDO FRT S/D SPKR (CAMEL)	98-00	Y07-67 (UZ6, 67I)	LH	10285250
	4-D22	9.665	GRILLE, RDO FRT S/D SPKR (CAMEL)	98-00	Y07-67 (UZ6, 67I)	RH	10285251
	4-D22	9.665	GRILLE, RDO FRT S/D SPKR (PEWTER)	99-00	Y07-67 (UZ6, 92I)	RH	10274047
	4-D22	9.665	GRILLE, RDO FRT S/D SPKR (PEWTER)	99-00	Y07-67 (UZ6, 92I)	LH	10274048
	4-D22	9.665	GRILLE, RDO FRT S/D SPKR (RED)	99	Y07-67 (UZ6, 94I)	RH	10274049
	4-D22	9.665	GRILLE, RDO FRT S/D SPKR (RED)	99	Y07-67 (UZ6, 94I)	LH	10274050
	4-D22	9.665	GRILLE, RDO FRT S/D SPKR (RED)	00	Y07-67 (UZ6, 70I)	LH	10409257
	4-D22	9.665	GRILLE, RDO FRT S/D SPKR (RED)	00	Y07-67 (UZ6, 70I)	RH	10409258
	4-D22	9.665	GRILLE, RDO FRT S/D SPKR (BLACK)	01-02	Y (19I)	RH	10274045
	4-D22	9.665	GRILLE, RDO FRT S/D SPKR (BLACK)	01-02	Y (19I)	LH	10274046
	4-D22	9.665	GRILLE, RDO FRT S/D SPKR (PEWTER)	01-02	Y07-67 (92I)	RH	10274047
	4-D22	9.665	GRILLE, RDO FRT S/D SPKR (PEWTER)	01-02	Y07-67 (92I)	LH	10274048
	4-D22	9.665	GRILLE, RDO FRT S/D SPKR (CAMEL)	01-02	Y07-67 (67I)	LH	10285250
	4-D22	9.665	GRILLE, RDO FRT S/D SPKR (CAMEL)	01-02	Y07-67 (67I)	RH	10285251
	4-D22	9.665	GRILLE, RDO FRT S/D SPKR (RED)	01-02	Y (70I)	LH	10409257
	4-D22	9.665	GRILLE, RDO FRT S/D SPKR (RED)	01-02	Y (70I)	RH	10409258
38.	4-D20	9.650	SPEAKER, RDO FRT (3"TWIDDLER, 7"WOOFER, 100W AMP) (AC-DELCO #10447355)	97-02	Y (UZ6)	2	10447355

cardiagn.com

						TY09-051	
39.		8.921	NUT, U TYPE, MULTI THD, PREV TORQ, M4.2X1.41TAP, 8.1REACH, 0.65-3.80 PNLS 1065 PZOR (RDO FRT SPKR) (AC-DELCO #11513599)	97-02	.....	12	11513599
40.	4-N26	15.222	RETAINER, R/CMPT SI T/PNL RET (PART OF 9) (13.0MM WIDE) (YELLOW) (U-BASE) (16.575) ...	97-02	Y07	6	15748479
41.	4-N26	15.222	RETAINER, R/CMPT SI T/PNL (PUSH IN) (PART OF 9) (WHITE) (4MM HOLE, 25.5MM LG) (MALE PUSH-IN) (14.630)	97-02	Y	2	10285935
42.	4-D17	9.647	CABLE, RDO ANT (COILED CORD JUMPER) (CONNECTS RR GLASS ANT TO RDO ANT AMP) (AC-DELCO #12189554)	97-02	Y07	1	12189554

RPO DEFINITIONS
UK1 – RADIO FREQUENCY(JAPANESE)
UL0 – RADIO AM/FM STEREO, SEEK/SCAN, AUTO REV MUSIC SEARCH CASS, AUTO TONE, CLOCK, ETR.
UL2 – RADIO FREQUENCY(EUROPEAN)
UN0 – RADIO,AM/FM,STEREO,SEEK/SCAN,COMPACT DISC,AUTO TONE,CLOCK,ETR
UQ5 – SPEAKER SYSTEM,4,DUAL FRONT DOOR MOUNTED,DUAL EXTENDED RANGE QUARTER MOUNTED
UV7 – ANTENNA, RR WINDOW, RADIO
UZ6 – SPEAKER SYSTEM 6, QUAD FRT DR MTD, DUAL QTR MTD
U1S – PLAYER MULTIPLE COMPACT DISC
19I – INTERIOR TRIM,BLACK
67I – INTERIOR TRIM,CAMEL
70I – INTERIOR TRIM,TORCH RED
92I – INTERIOR TRIM SHALE/PEWTER
94I – INTERIOR TRIM FIRETHORN RED (97)

cardiagn.com

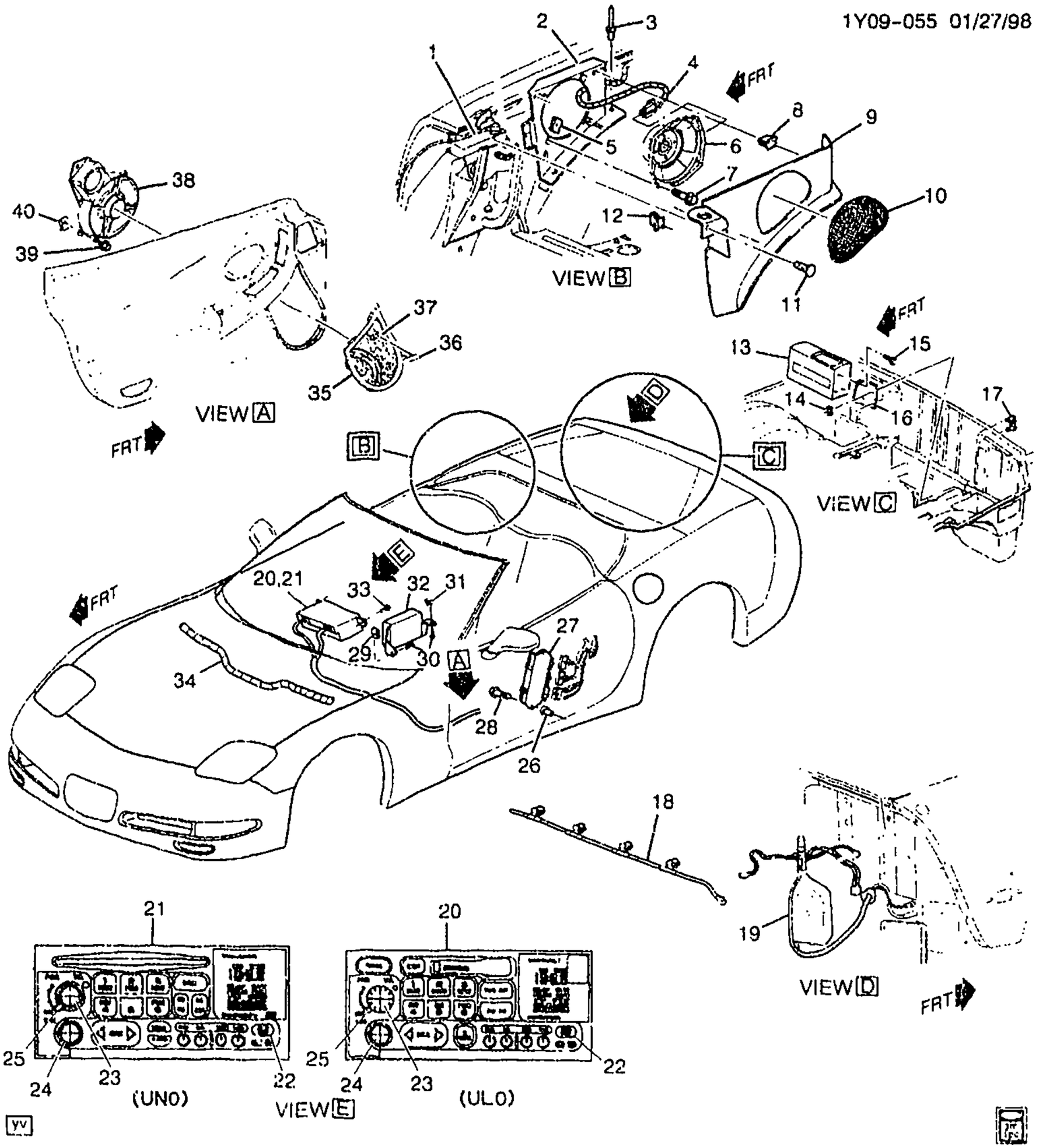

1Y09-055

1998-2002 Y67 AUDIO SYSTEM

1.	4-N20	12.942	PANEL, BODY L/PLR OTR UPR ..	98-02	Y67	LH	10414164
	4-N20	12.942	PANEL, BODY L/PLR OTR UPR ..	98-02	Y67	RH	10414165
2.	4-D22	9.665	HOUSING, RDO RR SPKR	98-02	Y67	LH	10272205
	4-D22	9.665	HOUSING, RDO RR SPKR	98-02	Y67	RH	10272206
3.		N.S.	RIVET, RDO RR SPKR HSG		.....	4	

cardiagn.com

							1Y09-055
4.	4-N21	13.090	HARNESS, BODY FRT WRG	98	Y67 (UZ6)	1	12189958
	4-N21	13.090	HARNESS, BODY FRT WRG	99-00	Y67 (EXC U1S)	1	12189599
	4-N21	13.090	HARNESS, BODY FRT WRG	99-00	Y67 (U1S)	1	12189962
	4-N21	13.090	HARNESS, BODY FRT WRG	01-02	YY67 (UZ6) (EXC U1S) .	1	15329386
	4-N21	13.090	HARNESS, BODY FRT WRG	01-02	YY67 (UZ6, U1S)	1	15329387
	4-D21	9.656	CONNECTOR, SPKR-RDO (GRAY) (2-WAY F W/LEADS) (INDEX TAB CTR CAVITY A&B) (2.535) (AC-DELCO #PT217) ...	98-02	Y	2	12101825
	4-D17	9.647	CABLE, RDO ANT (3825MM LONG) (AC-DELCO #12186127)	98	Y67 (UZ6)	1	12186127
	4-D17	9.647	CABLE, RDO ANT (4140MM LONG) (AC-DELCO #15324139)	98-02	Y67 (UZ6)	1	15324139
	4-D24	9.670	CONNECTOR, PLYR-CD (BLACK) (10-WAY F) (W/LEADS) (2.535) (AC-DELCO #PT108) ...	98-02	Y	1	12085486
	4-D24	9.670	CONNECTOR, PLYR-CD (BLACK) (3-WAY F W/LEADS) (2.535) (AC-DELCO #PT256) ...	01-02	YY67 (AG2, UZ6) (EXC U1S)	1	12101864
5.		8.921	NUT, U TYPE, MULTI THD, PREV TORQ, M4.2X1.41TAP, 8.1REACH, 0.65-3.80 PNLS 1065 PZOR (RDO RR SPKR) (AC-DELCO #11513599)	98-02	.....	8	11513599
6.	4-D22	9.665	SPEAKER, RDO RR (5 1/4" TWIDDLER-BOSE AUDIO SYSTEM) (AC-DELCO #10278959)	98-02	Y67 (UZ6)	2	10278959
7.		8.977	SCREW, HEX W/FL WA M4.2X2.25X20 TAP POR (RDO RR SPKR)	98-02	....	8	11508443
8.	4-D22	9.665	RETAINER, RDO RR SPKR GRL (13.0MM WIDE) (YELLOW) (U-BASE) (16.575)	98-02	Y67	4	15748479
9.	4-D22	9.665	GRILLE, RDO RR SPKR	98-02	Y67	RH	10414162
	4-D22	9.665	GRILLE, RDO RR SPKR	98-02	Y67	LH	10414163
10.		N.S.	SCREEN, RDO RR SPKR		.....		
11.	4-D22	9.665	RETAINER, RDO RR SPKR GRL (12.804)	98-02	Y67	2	20514862
12.	4-D22	9.665	RETAINER, RDO RR SPKR GRL (10.056)	98-02	Y67	2	16754704
13.	4-D24	9.670	PLAYER, AUDIO DISC (VERT MNT) (AC-DELCO #25685332) .	98-02	Y (U1S)	1	25685332
14.		8.917	NUT, HFH M6X1X6.5 ZOR 9 (AUDIO DISC PLYR)	98-02	.....	4	3530297
15.		8.900	BOLT-HFH, M4X0.7X6, 5.3 THD, 9.2 OD, GM500 (4.8), PC, MACH (CD/PLYR) (AC-DELCO #11503044)	98-02	.....	6	11503044
16.	4-D23	9.667	BRACKET, AUDIO DISC PLYR (9.670) (AC-DELCO #10291941)	98-02	Y (U1S)	LH	10291941
	4-D23	9.667	BRACKET, AUDIO DISC PLYR (9.670) (AC-DELCO #10291942)	98-02	Y (U1S)	RH	10291942
17.	4-D24	9.670	PLATE, CD/PLYR BRKT STUD (12.980)	98-02	Y (U1S)	2	10264812
18.	4-D17	9.647	STRAP, RDO ANT CBL	99-02	Y37-67 (U73, U75) ..	1	12189867

cardiagn.com

	4-D17	9.647	STRAP, RDO ANT CBL (2-WIRE ANT CBL STRAP) (W/SHIELD & CLIPS)	98	Y67 (U75)	1	12189867
19.	4-D17	9.647	ANTENNA, RDO (W/GND STRPS) (AC-DELCO #10285495)	98-02	Y67 (U75)	1	10285495
20.	4-D20	9.650	RADIO, AM/FM STEREO & CLK & T/PLYR (AC-DELCO #16257631)	98-99	Y (UL0, UZ6) (EXC UK1, UL2)	1	16257631
	4-D20	9.650	RADIO, AM/FM STEREO & CLK & T/PLYR (AC-DELCO #9390231)	00-02	Y (UL0, UZ6) (EXC UK1, UL2)	1	9390231
	4-D20	9.650	RADIO, AM/FM STEREO & CLK & T/PLYR (AC-DELCO #16257611)	98-99	Y (UL0, UL2, UZ6) (EXPORT)	1	16257611
	4-D20	9.650	RADIO, AM/FM STEREO & CLK & T/PLYR (AC-DELCO #16257621)	98-99	Y (UK1, UL0, UZ6) (EXPORT)	1	16257621
	4-D20	9.650	RADIO, AM/FM STEREO & CLK & T/PLYR (AC-DELCO #9390221)	00-02	Y (UK1, UL0, UZ6) (EXPORT)	1	9390221
	4-D20	9.650	RADIO, AM/FM STEREO & CLK & T/PLYR (AC-DELCO #9390241)	00-02	Y (UL0, UL2, UZ6) (EXPORT)	1	9390241
21.	4-D20	9.650	RADIO, AM/FM STEREO & CLK & CD PLYR (AC-DELCO #16257601)	98-99	Y (UN0, UZ6)	1	16257601
	4-D20	9.650	RADIO, AM/FM STEREO & CLK & CD PLYR (AC-DELCO #9390211)	00-02	Y (UN0, UZ6)	1	9390211
22.	4-D18	9.649	KNOB, RDO TONE CONT (AC-DELCO #16195412)	98-02	Y	2	16195412
23.	4-D18	9.649	KNOB, RDO VOL CONT (WING) (SPD CONT VOL) (AC-DELCO #16189159)	98	Y (UL0, UZ6, UN0)	1	16189159
	4-D18	9.649	KNOB, RDO VOL CONT (AC-DELCO #16195410)	98	Y (UL0, UZ6, UN0)	1	16195410
	4-D18	9.649	KNOB, RDO VOL CONT (WING) (SPD CONT VOL) (AC-DELCO #16189159)	99-02	Y (UL0, UZ6, UN0, UQ5)	1	16189159
	4-D18	9.649	KNOB, RDO VOL CONT (AC-DELCO #16195410)	99-01	Y (UL0, UZ6, UN0, UQ5)	1	16195410
	4-D18	9.649	KNOB, RDO VOL CONT (AC-DELCO #16195410)	02	Y (UL0, UZ6) (EXC UL2)	1	16195410
	4-D18	9.649	KNOB, RDO VOL CONT (SPD CONT VOL) (AC-DELCO #16234005)	00-02	Y (UL0, UL2, UZ6) (EXPORT)	1	16234005
	4-D18	9.649	KNOB, RDO VOL CONT (AC-DELCO #16234117)	00-02	Y (UL0, UL2, UZ6) (EXPORT)	1	16234117
24.	4-D18	9.649	KNOB, RDO TUNING CONT (AC-DELCO #16195409)	98	Y (UL0, UZ6, UN0)	1	16195409
	4-D18	9.649	KNOB, RDO TUNING CONT (AC-DELCO #16195409)	99-02	Y (UL0, UZ6, UN0, UQ5)	1	16195409
25.	4-D18	9.649	KNOB, RDO SPKR CONT (AC-DELCO #16195412)	98-02	Y	2	16195412
26.	4-N19	10.485	NUT, FRT S/D CONT MDL (M5 X .80) (SPECIAL AK SERIES) (14.683)	98-02	Y	4	10295386

cardiagn.com

27.	4-N19	10.485	MODULE, FRT S/D CONT (DRVR) (S/D LOCAL INTERFACE)	98-99	Y	LH	9352881
	4-N19	10.485	MODULE, FRT S/D CONT (DRVR) (S/D LOCAL INTERFACE)	00-02	Y	LH	9389689
	4-N19	10.485	MODULE, FRT S/D CONT (PASS) (S/D LOCAL INTERFACE)	98-99	Y	RH	9352891
	4-N19	10.485	MODULE, FRT S/D CONT (PASS) (S/D LOCAL INTERFACE)	00-02	Y	RH	10435192
28.	4-N19	10.485	BOLT, FRT S/D CONT MDL (10.268)	98-02	Y	4	10281420
29.		8.921	NUT, U TYPE, MULTI THD, PREV TORQ, M4.2X1.41TAP, 8.1REACH, 0.65-3.80 PNLS 1065 PZOR (RDO SPKR AMPF BRKT) (POSN #1) (FASTENS AMPF TO STRG COL BRKT) (AC-DELCO #11513599)	98-02		1	11513599
30.		8.977	SCREW, HEX W/FL WA M4.2X2.25X20 TAP POR (RDO SPKR AMPF)	98-02		2	11509443
31.	4-D22	9.665	NUT, RDO SPKR AMPF BRKT (POSN #2) (FASTENS RDO SPKR AMPF TO STRG COL BRKT) (4.2X1.41 TAPPING) (SPL) (3.430)	98-02	Y (UZ6)	1	25536302
32.	4-D20	9.650	AMPLIFIER, RDO SPKR (AC-DELCO #10283023)	98	Y67 (UZ6)	1	10283023
	4-D20	9.650	AMPLIFIER, RDO SPKR (AC-DELCO #10283023)	99-02	Y37-67 (UZ6)	1	10283023
33.		8.977	SCREW, HEX W/FL WA M4.2X2.25X20 TAP POR (RDO)	98-02		2	11508443
34.		N.S.	HARNESS, I/P WRG (SEE GROUP 10 FOR DETAILED ILLUSTRATED VIEW)				
35.	4-D22	9.665	GRILLE, RDO FRT S/D SPKR (BLACK)	98-00	Y (UZ6, 19I)	RH	10274045
	4-D22	9.665	GRILLE, RDO FRT S/D SPKR (BLACK)	98-00	Y (UZ6, 19I)	LH	10274046
	4-D22	9.665	GRILLE, RDO FRT S/D SPKR (PEWTER)	98	Y (UZ6, 92I)	RH	10274047
	4-D22	9.665	GRILLE, RDO FRT S/D SPKR (PEWTER)	98	Y (UZ6, 92I)	LH	10274048
	4-D22	9.665	GRILLE, RDO FRT S/D SPKR (RED)	98	Y (94I)	RH	10274049
	4-D22	9.665	GRILLE, RDO FRT S/D SPKR (RED)	98	Y (94I)	LH	10274050
	4-D22	9.665	GRILLE, RDO FRT S/D SPKR (CAMEL)	98-00	Y07-67 (UZ6, 67I)	LH	10285250
	4-D22	9.665	GRILLE, RDO FRT S/D SPKR (CAMEL)	98-00	Y07-67 (UZ6, 67I)	RH	10285251
	4-D22	9.665	GRILLE, RDO FRT S/D SPKR (PEWTER)	99-00	Y07-67 (UZ6, 92I)	RH	10274047
	4-D22	9.665	GRILLE, RDO FRT S/D SPKR (PEWTER)	99-00	Y07-67 (UZ6, 92I)	LH	10274048
	4-D22	9.665	GRILLE, RDO FRT S/D SPKR (RED)	99	Y07-67 (UZ6, 94I)	RH	10274049
	4-D22	9.665	GRILLE, RDO FRT S/D SPKR (RED)	99	Y07-67 (UZ6, 94I)	LH	10274050

cardiagn.com

	4–D22	9.665	GRILLE, RDO FRT S/D SPKR (RED)	00	Y07–67 (UZ6, 70I)	LH	10409257
	4–D22	9.665	GRILLE, RDO FRT S/D SPKR (RED)	00	Y07–67 (UZ6, 70I)	RH	10409258
	4–D22	9.665	GRILLE, RDO FRT S/D SPKR (BLACK)	01–02	Y (19I)	RH	10274045
	4–D22	9.665	GRILLE, RDO FRT S/D SPKR (BLACK)	01–02	Y (19I)	LH	10274046
	4–D22	9.665	GRILLE, RDO FRT S/D SPKR (PEWTER)	01–02	Y07–67 (92I)	RH	10274047
	4–D22	9.665	GRILLE, RDO FRT S/D SPKR (PEWTER)	01–02	Y07–67 (92I)	LH	10274048
	4–D22	9.665	GRILLE, RDO FRT S/D SPKR (CAMEL)	01–02	Y07–67 (67I)	LH	10285250
	4–D22	9.665	GRILLE, RDO FRT S/D SPKR (CAMEL)	01–02	Y07–67 (67I)	RH	10285251
	4–D22	9.665	GRILLE, RDO FRT S/D SPKR (RED)	01–02	Y (70I)	LH	10409257
	4–D22	9.665	GRILLE, RDO FRT S/D SPKR (RED)	01–02	Y (70I)	RH	10409258
36.	4–D22	9.665	EMBLEM, RDO FRT S/D SPKR GRL	98–02	Y (UZ6)	2	10291759
37.	4–D22	9.665	SCREEN, RDO FRT S/D SPKR	98–02	Y	LH	10291755
	4–D22	9.665	SCREEN, RDO FRT S/D SPKR	98–02	Y	RH	10291756
38.	4–D20	9.650	SPEAKER, RDO FRT (3"TWIDDLER, 7"WOOFER, 100W AMP) (AC–DELCO #10447355)	98–02	Y (UZ6)	2	10447355
39.		8.977	SCREW, HEX W/FL WA M4.2X2.25X20 TAP POR (RDO FRT SPKR)	98–02		12	11508443
40.		8.921	NUT, U TYPE, MULTI THD, PREV TORQ, M4.2X1.41TAP, 8.1REACH, 0.65–3.80 PNLS 1065 PZOR (RDO FRT SPKR) (AC–DELCO #11513599)	98–02		12	11513599

RPO DEFINITIONS

AG2 – ADJUSTER,SEAT,6–WAY POWER,SPLIT BENCH,PASSENGER
UK1 – RADIO FREQUENCY(JAPANESE)
UL0 – RADIO AM/FM STEREO, SEEK/SCAN, AUTO REV MUSIC SEARCH CASS, AUTO TONE, CLOCK, ETR.
UL2 – RADIO FREQUENCY(EUROPEAN)
UN0 – RADIO,AM/FM,STEREO,SEEK/SCAN,COMPACT DISC,AUTO TONE,CLOCK,ETR
UQ5 – SPEAKER SYSTEM,4,DUAL FRONT DOOR MOUNTED,DUAL EXTENDED RANGE QUARTER MOUNTED
UZ6 – SPEAKER SYSTEM 6, QUAD FRT DR MTD, DUAL QTR MTD
U1S – PLAYER MULTIPLE COMPACT DISC
U73 – ANTENNA,FIXED
U75 – ANTENNA,POWER(CHROME)
19I – INTERIOR TRIM,BLACK
67I – INTERIOR TRIM,CAMEL
70I – INTERIOR TRIM,TORCH RED
92I – INTERIOR TRIM SHALE/PEWTER
94I – INTERIOR TRIM FIRETHORN RED (97)

cardiagn.com

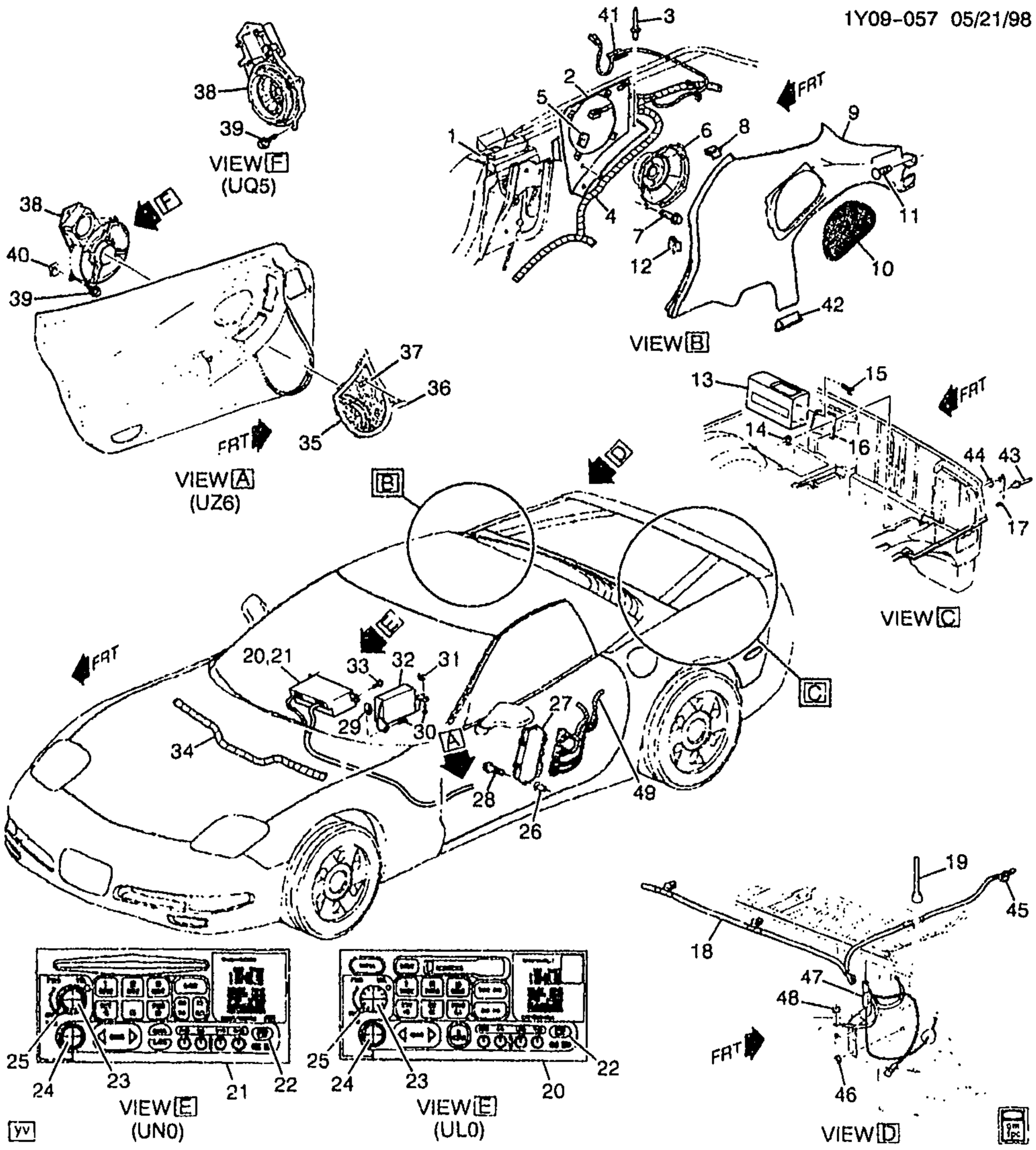

1Y09-057

1999-2002 Y37 AUDIO SYSTEM

1.	4-N20	12.942	PANEL, BODY L/PLR OTR (#54) .	99-00	Y	LH	12369436
	4-N20	12.942	PANEL, BODY L/PLR OTR (#54) .	99-00	Y	RH	12369437

cardiagn.com

							1Y09-057
	4-N20	12.942	PANEL, BODY L/PLR OTR (#54) (CARS BUILT PRIOR TO LAST EIGHT DIGIT OF VIN 15117747;FOR 1ST DESIGN SEE 88951187)	01	Y (2ND DES)	LH	12369436
	4-N20	12.942	PANEL, BODY L/PLR OTR (#54) (CARS BUILT PRIOR TO LAST EIGHT DIGIT OF VIN 15117747;FOR 1ST DESIGN SEE 88951188)	01	Y (2ND DES)	RH	12369437
	4-N20	12.942	PANEL, BODY L/PLR OTR (#54) (CARS BUILT WITH AND AFTER THE LAST EIGHT DIGIT OF VIN 15117747;FOR 2ND DESIGN SEE 12369436)	01	Y (1ST DES)	LH	88951187
	4-N20	12.942	PANEL, BODY L/PLR OTR (#54) (CARS BUILT WITH AND AFTER THE LAST EIGHT DIGIT OF VIN 15117747;FOR 2ND DESIGN SEE 12369437)	01	Y (1ST DES)	RH	88951188
	4-N20	12.942	PANEL, BODY L/PLR OTR (#54) .	02	Y	LH	88951187
	4-N20	12.942	PANEL, BODY L/PLR OTR (#54) .	02	Y	RH	88951188
2.	4-D22	9.665	HOUSING, RDO RR SPKR	99-02	Y37	LH	10272205
	4-D22	9.665	HOUSING, RDO RR SPKR	99-02	Y37	RH	10272206
3.		N.S.	RIVET, RDO RR SPKR HSG		.....	4	
4.	4-N21	13.090	HARNESS, BODY FRT WRG	99-00	Y37 (U1S)	1	12163772
	4-N21	13.090	HARNESS, BODY FRT WRG	99-00	Y37 (EXC U1S)	1	12189595
	4-N21	13.090	HARNESS, BODY FRT WRG	01-02	YY37	1	15329378
	4-D21	9.656	CONNECTOR, SPKR-RDO (GRAY) (2-WAY F W/LEADS) (INDEX TAB CTR CAVITY A&B) (2.535) (AC-DELCO #PT217) ...	99-02	Y	2	12101825
	4-D24	9.670	CONNECTOR, PLYR-CD (BLACK) (10-WAY F) (W/LEADS) (2.535) (AC-DELCO #PT108) ...	99-02	Y	1	12085486
5.		8.921	NUT, U TYPE, MULTI THD, PREV TORQ, M4.2X1.41TAP, 8.1REACH, 0.65-3.80 PNLS 1065 PZOR (RDO RR SPKR) (AC-DELCO #11513599)	99-02	.....	8	11513599
6.	4-D22	9.665	SPEAKER, RDO RR (5 1/4" TWIDDLER-BOSE AUDIO SYSTEM) (AC-DELCO #10278959)	99-02	Y37 (UQ5, UZ6)	2	10278959
7.		8.977	SCREW, HEX W/FL WA M4.2X2.25X20 TAP POR (RDO RR SPKR)	99-02	.....	8	11508443
8.		8.921	NUT, PUSH-ON (SELFLOCK EXT RET 1/4" PHOS) (RDO RR SPKR GRL)	99-02	.....	6	3909063
9.	4-N26	15.100	PANEL, BODY SI TR (BLACK) ...	99-02	Y37	RH	10258568
	4-N26	15.100	PANEL, BODY SI TR ((BLACK)) ..	99-02	Y37	LH	10258567
10.		N.S.	SCREEN, RDO RR SPKR		.....		
11.	4-N26	15.100	RETAINER, BODY SI T/PNL (8.154)	99-02	Y37	2	332364

cardiagn.com

							1Y09-057
12.	4-N26	15.100	RETAINER, BODY SI T/PNL (13.0MM WIDE) (YELLOW) (U-BASE) (16.575)	99-02	Y37	8	15748479
13.	4-D24	9.670	PLAYER, AUDIO DISC (VERT MNT) (AC-DELCO #25685332) .	99-02	Y (U1S)	1	25685332
14.		8.917	NUT, HFH M6X1X6.5 ZOR 9 (AUDIO DISC PLYR)	99-02	.....	4	3530297
15.		8.900	BOLT-HFH, M4X0.7X6, 5.3 THD, 9.2 OD, GM500 (4.8), PC, MACH (CD/PLYR) (AC-DELCO #11503044)	99-02	.....	6	11503044
16.	4-D23	9.667	BRACKET, AUDIO DISC PLYR (9.670) (AC-DELCO #10291941)	99-02	Y (U1S)	LH	10291941
	4-D23	9.667	BRACKET, AUDIO DISC PLYR (9.670) (AC-DELCO #10291942)	99-02	Y (U1S)	RH	10291942
17.	4-D24	9.670	PLATE, CD/PLYR BRKT STUD (12.980)	99-02	Y (U1S)	2	10264812
18.	4-D17	9.647	STRAP, RDO ANT CBL	99-02	Y37-67 (U73, U75) ...	1	12189867
19.	4-D17	9.647	ANTENNA, RDO (MAST) (3/4" SHORT BASE) (W/O DIMPLE) (AC-DELCO #10289035)	99-02	Y37 (U73)	1	10289035
20.	4-D20	9.650	RADIO, AM/FM STEREO & CLK & T/PLYR (AC-DELCO #16257631)	99	Y (UL0, UZ6) (EXC UK1, UL2)	1	16257631
	4-D20	9.650	RADIO, AM/FM STEREO & CLK & T/PLYR (AC-DELCO #16210221)	99-00	Y37 (UL0, UQ5) (EXC UK1, UL2)	1	16210221
	4-D20	9.650	RADIO, AM/FM STEREO & CLK & T/PLYR (AC-DELCO #9390231)	00-02	Y (UL0, UZ6) (EXC UK1, UL2)	1	9390231
	4-D20	9.650	RADIO, AM/FM STEREO & CLK & T/PLYR (AC-DELCO #16257611)	99	Y (UL0, UL2, UZ6) (EXPORT)	1	16257611
	4-D20	9.650	RADIO, AM/FM STEREO & CLK & T/PLYR (AC-DELCO #16257621)	99	Y (UK1, UL0, UZ6) (EXPORT)	1	16257621
	4-D20	9.650	RADIO, AM/FM STEREO & CLK & T/PLYR (AC-DELCO #9390221)	00-02	Y (UK1, UL0, UZ6) (EXPORT)	1	9390221
	4-D20	9.650	RADIO, AM/FM STEREO & CLK & T/PLYR (AC-DELCO #9390241)	00-02	Y (UL0, UL2, UZ6) (EXPORT)	1	9390241
21.	4-D20	9.650	RADIO, AM/FM STEREO & CLK & CD PLYR (AC-DELCO #16257601)	99	Y (UN0, UZ6)	1	16257601
	4-D20	9.650	RADIO, AM/FM STEREO & CLK & CD PLYR (AC-DELCO #9390211)	00-02	Y (UN0, UZ6)	1	9390211
22.	4-D18	9.649	KNOB, RDO TONE CONT (AC-DELCO #16195412)	99-02	Y	2	16195412
23.	4-D18	9.649	KNOB, RDO VOL CONT (WING) (SPD CONT VOL) (AC-DELCO #16189159)	99-02	Y (UL0, UZ6, UN0, UQ5)	1	16189159
	4-D18	9.649	KNOB, RDO VOL CONT (AC-DELCO #16195410)	99-01	Y (UL0, UZ6, UN0, UQ5)	1	16195410
	4-D18	9.649	KNOB, RDO VOL CONT (WING) (SPD CONT VOL) (AC-DELCO #16189159)	99-02	Y37 (UL0, UQ5) (EXC UK1, UL2)	1	16189159

cardiagn.com

							1Y09-057
	4-D18	9.649	KNOB, RDO VOL CONT (AC-DELCO #16195410)	99-01	Y37 (UL0, UQ5) (EXC UK1, UL2)	1	16195410
	4-D18	9.649	KNOB, RDO VOL CONT (AC-DELCO #16195410)	02	Y (UL0, UZ6) (EXC UL2)	1	16195410
	4-D18	9.649	KNOB, RDO VOL CONT (SPD CONT VOL) (AC-DELCO #16234005)	00-02	Y (UL0, UL2, UZ6) (EXPORT)	1	16234005
	4-D18	9.649	KNOB, RDO VOL CONT (AC-DELCO #16234117)	00-02	Y (UL0, UL2, UZ6) (EXPORT)	1	16234117
24.	4-D18	9.649	KNOB, RDO TUNING CONT (AC-DELCO #16195409)	99-02	Y (UL0, UZ6, UN0, UQ5)	1	16195409
	4-D18	9.649	KNOB, RDO TUNING CONT (AC-DELCO #16195409)	99-02	Y37 (UL0, UZ6) (EXC UK1, UL2)	1	16195409
25.	4-D18	9.649	KNOB, RDO SPKR CONT (AC-DELCO #16195412)	99-02	Y	2	16195412
26.	4-N19	10.485	NUT, FRT S/D CONT MDL (M5 X .80) (SPECIAL AK SERIES) (14.683)	99-02	Y	4	10295386
27.	4-N19	10.485	MODULE, FRT S/D CONT (DRVR) (S/D LOCAL INTERFACE)	99	Y	LH	9352881
	4-N19	10.485	MODULE, FRT S/D CONT (DRVR) (S/D LOCAL INTERFACE)	00-02	Y	LH	9389689
	4-N19	10.485	MODULE, FRT S/D CONT (PASS) (S/D LOCAL INTERFACE)	99	Y	RH	9352891
	4-N19	10.485	MODULE, FRT S/D CONT (PASS) (S/D LOCAL INTERFACE)	00-02	Y	RH	10435192
28.	4-N19	10.485	BOLT, FRT S/D CONT MDL (10.268)	99-02	Y	4	10281420
29.		8.921	NUT, U TYPE, MULTI THD, PREV TORQ, M4.2X1.41TAP, 8.1REACH, 0.65-3.80 PNLS 1065 PZOR (RDO SPKR AMPF BRKT) (POSN #1) (FASTENS AMPF TO STRG COL BRKT) (AC-DELCO #11513599)	99-02	.....	1	11513599
30.		8.977	SCREW, HEX W/FL WA M4.2X2.25X20 TAP POR (RDO SPKR AMPF)	99-02	.....	2	11508443
31.	4-D22	9.665	NUT, RDO SPKR AMPF BRKT (POSN #2) (FASTENS RDO SPKR AMPF TO STRG COL BRKT) (4.2X1.41 TAPPING) (SPL) (3.430)	99-02	Y (UZ6)	1	25536302
32.	4-D20	9.650	AMPLIFIER, RDO SPKR (AC-DELCO #10283023)	99-02	Y37-67 (UZ6)	1	10283023
33.		8.977	SCREW, HEX W/FL WA M4.2X2.25X20 TAP POR (RDO) ..	99-02	.....	2	11508443
34.		N.S.	HARNESS, I/P WRG (SEE GROUP 10 FOR DETAILED ILLUSTRATED VIEW)		.....		
35.	4-D22	9.665	GRILLE, RDO FRT S/D SPKR (BLACK)	99-00	Y (UZ6 19I)	RH	10274045
	4-D22	9.665	GRILLE, RDO FRT S/D SPKR (BLACK)	99-00	Y (UZ6, 19I)	LH	10274046
	4-D22	9.665	GRILLE, RDO FRT S/D SPKR (BLACK)	99-00	Y37 (UQ5, 19I)	LH	10291439
	4-D22	9.665	GRILLE, RDO FRT S/D SPKR (BLACK)	99-00	Y37 (UQ5, 19I)	RH	10291440

cardiagn.com

							1Y09-057
	4-D22	9.665	GRILLE, RDO FRT S/D SPKR (BLACK)	01-02	Y (19I)	RH	10274045
	4-D22	9.665	GRILLE, RDO FRT S/D SPKR (BLACK)	01-02	Y (19I)	LH	10274046
	4-D22	9.665	GRILLE, RDO FRT S/D SPKR (RED)	01-02	Y (70I)	LH	10409257
	4-D22	9.665	GRILLE, RDO FRT S/D SPKR (RED)	01-02	Y (70I)	RH	10409258
36.	4-D22	9.665	EMBLEM, RDO FRT S/D SPKR GRL	99-02	Y (UZ6)	2	10291759
37.	4-D22	9.665	SCREEN, RDO FRT S/D SPKR	99-02	Y	LH	10291755
	4-D22	9.665	SCREEN, RDO FRT S/D SPKR	99-02	Y	RH	10291756
38.	4-D20	9.650	SPEAKER, RDO FRT (AC-DELCO #16255371)	99-00	Y37 (UQ5)	2	16255371
	4-D20	9.650	SPEAKER, RDO FRT (3"TWIDDLER, 7"WOOFER, 100W AMP) (AC-DELCO #10447355)	99-02	Y (UZ6)	2	10447355
39.		8.977	SCREW, HEX W/FL WA M4.2X2.25X20 TAP POR (RDO FRT SPKR)	99-02		12	11508443
40.		8.921	NUT, U TYPE, MULTI THD, PREV TORQ, M4.2X1.41TAP, 8.1REACH, 0.65-3.80 PNLS 1065 PZOR (RDO FRT SPKR) (AC-DELCO #11513599)	99-02		12	11513599
41.		N.S.	TAPE, BODY WRG HARN				
42.	4-N26	15.100	RETAINER, BODY SI T/PNL	99-02	Y37	2	10417444
43.		N.S.	RIVET, AUDIO DISC PLYR BRKT STUD PLT				
44.		N.S.	SEAL, AUDIO DISC PLYR BRKT STUD PLT				
45.		N.S.	CLIP, RDO ANT CBL STRAP				
46.		8.917	NUT, HFH M6X1X6.5 ZOR 9 (RDO ANT BRKT)	99-02		2	3530297
47.	4-D17	9.647	BRACKET, RDO ANT (INCLS STUD ASM, BRACKET, GROUND STRAPS & GROUND STRAP BOLT)	99-02	Y37 (U73)	1	10282230
48.		8.917	NUT, HFH M6X1X6.5 ZOR 9 (RDO PWR ANT GND STRP)	99-02		1	3530297
49.	4-N21	13.090	HARNESS, DR LK & O/S RRVIEW MIR MEMORY INTERFACE MDL WRG	99-00	Y	LH	12163314
	4-N21	13.090	HARNESS, DR LK & O/S RRVIEW MIR MEMORY INTERFACE MDL WRG	99	Y	RH	12163315
	4-N21	13.090	HARNESS, DR LK & O/S RRVIEW MIR MEMORY INTERFACE MDL WRG	00-02	Y (T93)	RH	12163315
	4-N21	13.090	HARNESS, DR LK & O/S RRVIEW MIR MEMORY INTERFACE MDL WRG	01-02	Y (DL8)	LH	12163314
	4-N21	13.090	HARNESS, DR LK & O/S RRVIEW MIR MEMORY INTERFACE MDL WRG	01-02	Y (DD0)	LH	12189556

RPO DEFINITIONS
DD0 – MIRROR,O/S,R AND L REM CTL,ELEC,DEFOG,LT SENSITIVE

cardiagn.com

DL8 – MIRROR,OUTSIDE,RH AND LH REMOTE CONTROL,ELECTRIC,DEFOG
T93 – LAMP,TAIL AND STOP(SPECIAL)
UK1 – RADIO FREQUENCY(JAPANESE)
UL0 – RADIO AM/FM STEREO, SEEK/SCAN, AUTO REV MUSIC SEARCH CASS, AUTO TONE, CLOCK, ETR.
UL2 – RADIO FREQUENCY(EUROPEAN)
UN0 – RADIO,AM/FM,STEREO,SEEK/SCAN,COMPACT DISC,AUTO TONE,CLOCK,ETR
UQ5 – SPEAKER SYSTEM,4,DUAL FRONT DOOR MOUNTED,DUAL EXTENDED RANGE QUARTER MOUNTED
UZ6 – SPEAKER SYSTEM 6, QUAD FRT DR MTD, DUAL QTR MTD
U1S – PLAYER MULTIPLE COMPACT DISC
U73 – ANTENNA,FIXED
U75 – ANTENNA,POWER(CHROME)
19I – INTERIOR TRIM,BLACK
70I – INTERIOR TRIM,TORCH RED

cardiagn.com

	6.009	**NUT, Steering Knuckle**				
97–02	Y	3537772	2	*1.45	NUT, S/KNU (POSN #2, UPR LOC) (M12.0X1.75X10.6) (08.917)	
97–02	Y	10282253	2	3.33	NUT, S/KNU (POSN #1, LWR LOC) (M14X2.0 6H THD) (06.164)	4–E4,19
	6.020	**KNUCKLE, Steering**				
97–02	Y	10237238	RH	141.49	KNUCKLE, STRG (COMMON KNUCKLE FOR RH/FRT & LH/RR) (W/BALL JOINT)	4–E4,16
97–02	Y	10237239	LH	141.49	KNUCKLE, STRG (COMMON KNUCKLE FOR LH/FRT & RH/RR) (W/BALL JOINT)	4–E4,16
	6.163	**WASHER, Steering Knuckle Upper Control Arm**				
97–99	Y	10289125	8	3.33	WASHER, FRT UPR CONT ARM	4–E4,9
00–02	Y	10289125	6	3.33	WASHER, FRT UPR CONT ARM	4–E4,9
	6.168	**ARM, Steering Knuckle Upper & Lower Control**				
97–02	Y	10233629	LH	169.59	ARM, FRT LWR CONT (W/BUSHINGS & BALL STUD) (PERM MOLD ALUM)	4–E4,27
97–02	Y	10233630	RH	169.59	ARM, FRT LWR CONT (W/BUSHINGS & BALL STUD) (PERM MOLD ALUM)	4–E4,27
97–02	Y	10233616	LH	121.73	ARM, FRT UPR CONT (COMPOSITE)	4–E4,11
97–02	Y	10233617	RH	121.73	ARM, FRT UPR CONT (COMPOSITE)	4–E4,11
	6.172	**NUT, Steering Knuckle Lower Control Arm**				
97–02	Y	11516382	4	*1.03	NUT, FRT LWR CONT ARM (M14X2X16 19.6) (HFH LK) (08.917)	
	6.174	**BOLT, Front Wheel Lower Control Arm**				
97–02	Y	10254819	4	4.95	BOLT, FRT LWR CONT ARM FRT (138.6MM LGXM14X2.6) (05.383)	4–E4,26
	6.177	**BRACKET – REINFORCEMENT, Steering Knuckle Control Arm**				
97–02	Y	10421762	LH	8.39	BRACKET, FRT SUSP UPR CONT ARM (#21)	4–E4,2
97–02	Y	10421763	RH	8.39	BRACKET, FRT SUSP UPR CONT ARM (#21)	4–E4,2
97–01	Y	10421764	LH	17.22	REINFORCEMENT, FRT UPR CONT ARM BRKT (#20, LWR)	4–E4,4
97–01	Y	10421765	RH	16.80	REINFORCEMENT, FRT UPR CONT ARM BRKT (#20, LWR) (AC–DELCO #10421765)	4–E4,4
	6.178	**BOLT – CAM, Steering Knuckle Upper Control Arm**				
97–00	Y	11515767	8	*.58	BOLT, FRT UPR CONT ARM (M10X1.5X35, 32THD, 10.9) (08.900)	4–E4,10
97	Y	24506340	8	3.33	BOLT, FRT UPR CONT ARM (00.029)	4–E4,10

cardiagn.com

6.178 BOLT – CAM, Steering Knuckle Upper Control Arm (Con't)

98–02	Y	11515768	8	*.58	BOLT, FRT UPR CONT ARM (M10X1.5X40, 30 THD) (08.900)	
97–02	Y	10254818	4	1.95	CAM, FRT LWR CONT ARM ADJ (05.381)	4–E4,29

6.230 ROD KIT, Steering Tie Rod Inner

97–02	Y	26055105	2	115.24	ROD KIT, STRG LNKG INR TIE (06.233)	4–E12,8

6.233 ROD KIT, Tie Rod

97–02	Y	26071832	2	59.31	ROD KIT, STRG LNKG OTR TIE	4–E12,3
97–99	Y07	26071832	2	59.31	ROD KIT, STRG LNKG OTR TIE	4–E12,3
99	Y37	26071832	2	59.31	ROD KIT, STRG LNKG OTR TIE	4–E12,3
99	Y67	26071832	2	59.31	ROD KIT, STRG LNKG OTR TIE	4–E12,3
00–02	Y	26071832	2	59.31	ROD KIT, STRG LNKG OTR TIE	4–E12,3

6.234 NUT, Steering Tie Rod

97–02	Y	26017267	2	7.78	NUT, STRG LNKG INR TIE ROD (M14X1.5X11, 510M (5), ZC) (06.526)	
97–02	Y	3537772	2	*1.45	NUT, STRG LNKG OTR TIE ROD (M12.0X1.75X10.6) (08.917)	4–E4,20

6.242 BOOT – BOOT KIT – CLAMP, Steering Tie Rod

97–02	Y	21011025	2	35.12	BOOT KIT, S/GR (INCLS BOOT, CLAMPS, GREASE)	4–E12,6
97–98	YY 5.7G (LS1)	88910854	1	20.18	BOOT KIT, S/GR (AC–DELCO #45A7055)	4–E12,6
97–98	Y0 5.7G (LS1)	88910854	1	20.18	BOOT KIT, S/GR (AC–DELCO #45A7055)	4–E12,6
01–02	Y	21011025	2	35.12	BOOT, S/GR (INCLS BOOT, CLAMPS, GREASE)	4–E12,6
97–02	Y	3786276	2	3.33	CLAMP, S/GR BOOT (OTR) (14.8MM DIA) (01.855)	
97–02	Y	26013335	2	7.95	CLAMP, S/GR BOOT (TIE ROD END) (OTR)	4–E12,5
97–02	Y	26029756	2	3.38	CLAMP, S/GR BOOT (HOUSING END) (INR)	4–E12,7

6.311 BEARING, Front Wheel Inner

97–02	Y	7470569	2	668.00	BEARING, FRT WHL (W/INTEGRAL SENSOR) (AC–DELCO #20–569)	4–E4,18
00	Y	457232	2	37.00	BEARING, FRT WHL (ID:LM501349–LM501310) (INCLS CUP&CONE) (1 5/8 ID X 2 57/64 OD X 25/32 THK) (TIMKEN) (05.536) (AC–DELCO #S21)	4–E4,18

6.323 SHIELD, Front Wheel Hub & Drum

97–02	Y	10263081	LH	3.30	SHIELD, FRT BRK BRG (USE AS A.B.S. WIRE GUIDE FRT)	4–E4,17
97–02	Y	10263082	RH	3.30	SHIELD, FRT BRK BRG (USE AS A.B.S. WIRE GUIDE FRT)	4–E4,17

© 2001 GENERAL MOTORS SERVICE PARTS OPERATIONS–CHEVROLET–15Y

cardiagn.com

6.500 PLATE – RING, Steering Column Housing

97	Y	26045147	1	22.36	PLATE, STRG SHF LK	4–E17,10
98	Y (EXC STRG COL (NP7) (EXPORT)	26045147	1	22.36	PLATE, STRG SHF LK	4–E17,10
99	Y07–67 (EXC STRG COL (NP7) (EXPORT)	26045147	1	22.36	PLATE, STRG SHF LK	4–E17,10
99	Y37	26045147	1	22.36	PLATE, STRG SHF LK	4–E17,10
00–02	Y07–67 (EXC STRG COL (NP7) (EXPORT)	26090892	1	6.29	PLATE, STRG SHF LK	4–E20,9
00–02	Y37	26090892	1	6.29	PLATE, STRG SHF LK	4–E20,9
97–02	Y	5694191	1	3.38	RING, STRG SHF LK PLT RET (06.524)	4–E17,7
99–02	Y T&T WHL (N37)	26052097	1	3.38	RING, STRG WHL LK PIN RET (06.518)	
	*EXPORT**********EXPORT**********EXPORT**********EXPORT********** ******EXPORT*					
00–01	Y07–67 STRG COL (NP7) (EXPORT)	26090892	1	6.29	PLATE, STRG SHF LK	4–E20,9

6.508 GEAR KIT, Steering

97	Y	26056983	1	993.07	GEAR KIT, STRG (REMAN) (AC–DELCO #36–9166)	4–E4,37
98	Y (1ST DES)	26056983	1	993.07	GEAR KIT, STRG (REMAN) (GEAR WIRING HARNESS ROUTES ALONG BOTTOM OF GEAR, FOR 2ND DESIGN SEE 26075861) (AC–DELCO #36–9166)	4–E4,37
98	Y (2ND DES)	26075861	1	798.42	GEAR KIT, STRG (REMAN) (GEAR WIRING HARNESS ROUTES ALONG TOP OF GEAR, FOR 1ST DES SEE 26056983) (AC–DELCO #36–9192)	4–E4,37
99	Y07–67	26075933	1	798.42	GEAR KIT, STRG (REMAN) (AC–DELCO #36–9191)	4–E4,37
99	Y37 P/S (VARIABLE) (NV7)	26075933	1	798.42	GEAR KIT, STRG (REMAN) (AC–DELCO #36–9191)	4–E4,37
00–02	Y	26075933	1	798.42	GEAR KIT, STRG (REMAN) (AC–DELCO #36–9191)	4–E4,37
01	Y37	26079818	1	972.14	GEAR KIT, STRG (REMAN) (AC–DELCO #36–9224)	4–E4,37

6.509 BOLT – CLAMP – INSULATOR – NUT – SLEEVE – WASHER, Steering Gear Mounting

97	Y	11515816	2	3.33	BOLT, S/GR (TORQ MATING PART) (M12X1.75X80) (08.900)	4–E4,35
98	Y FRT ABS BRAKE LOC (JAG)	10422130	1	3.33	BOLT, S/GR	4–E4,35
99–02	Y	10422130	2	3.33	BOLT, S/GR	4–E4,35
97–02	Y	10293740	1	3.38	CLAMP, S/GR CPLG SHLD (08.948)	4–F11,29
97–02	Y	10062902	2	5.98	INSULATOR, S/GR (AC–DELCO #36–9530)	
97–02	Y	11516078	2	3.33	NUT, S/GR (M12X1.75) (08.917)	
97–02	Y	14088178	1	6.22	SLEEVE, S/GR BUSH (AC–DELCO #36–9533)	
97	Y	10406711	1	3.33	WASHER, S/GR	4–E4,62
98	Y FRT ABS BRAKE LOC (JAG)	10406711	1	3.33	WASHER, S/GR	4–E4,62
99–02	Y	10406711	1	3.33	WASHER, S/GR	4–E4,62

cardiagn.com

6.512 MODULE, Steering Wheel

97	Y F/SEAT INFL RST SYS (AK5)	10407331	1	638.00	MODULE, STRG WHL INFL RST (14.865)	4–E15,4
98	Y F/SEAT INFL RST SYS (AK5)	10411124	1	638.00	MODULE, STRG WHL INFL RST (14.865)	4–E15,4
99–02	Y F/SEAT INFL RST SYS (AK5)	10415723	1	638.00	MODULE, STRG WHL INFL RST (14.865)	4–E15,4

6.513 WHEEL, Steering

NOTE: FOR HORN RING SEE GROUP 2.819, FOR HORN CAP SEE GROUP 2.820.

97	Y	10424050	1	343.32	WHEEL, STRG	4–E15,2
98	Y07	10424050	1	343.32	WHEEL, STRG	4–E15,2
98	Y67 INDY PACE CAR (Z4Z)	10419490	1	218.48	WHEEL, STRG	4–E15,2
98	Y67 (EXC INDY PACE CAR (Z4Z)	10424050	1	343.32	WHEEL, STRG	4–E15,2
99–02	Y	10424050	1	343.32	WHEEL, STRG	4–E15,2

6.514 ADAPTER – BOLT – GUIDE – LEVER – MOTOR – PIN – SPRING – SWITCH, Steering Column

99–02	Y T&T WHL (N37)	26052086	1		ADAPTER, STRG COL TLSCP ACTR	4–E20,40
99–02	Y T&T WHL (N37)	26052087	1		ADAPTER, STRG COL TLSCP ACTR (BOLT/SCREW)	4–E20,40
99–02	Y T&T WHL (N37)	26061674	1	219.53	ADAPTER, STRG COL TLSCP ACTR	4–E20,40
99–02	Y T&T WHL (N37)	26061675	1		ADAPTER, STRG COL TLSCP ACTR	4–E20,40
97–99	Y	26036495	4	6.68	BOLT, STRG COL HSG SUPT (M8X1.25X19) (EXT TORX FLG HD DOG PT)	4–E17,24
99–02	Y07–67 T&T WHL (N37)	26003095	4	12.25	BOLT, STRG COL HSG SUPT (M8X1.25X16) (TORX HD)	4–E17,24
00–01	Y07–67 (EXC T&T WHL (N37)	26085842	4	5.85	BOLT, STRG COL HSG SUPT (EXTERNAL TORX HD, M8 X 1.25–6G (22) THD X 20, 7MM)	4–E24,32
00–01	Y37	26085842	4	5.85	BOLT, STRG COL HSG SUPT (EXTERNAL TORX HD, M8 X 1.25–6G (22) THD X 20, 7MM)	4–E24,32
99–02	Y T&T WHL (N37)	26036497	3	3.38	BOLT, STRG COL TLSCP ACTR (M5X.8X15) (PAN HD TORX TAP) (06.760)	4–E20,38
99–02	Y T&T WHL (N37)	26052098	4	3.38	BOLT, STRG COL TLSCP ACTR (M6X1.0X28.25) (PAN HD TORX TAP) (06.521)	4–E20,38
99–02	Y T&T WHL (N37)	26061695	2	6.68	BOLT, STRG COL TLSCP ACTR	4–E20,38
97–02	Y	26034561	1	3.38	GUIDE, STRG COL SPR	4–E17,27
97–02	Y	10271070	1	6.34	LEVER, STRG COL TILT WHL REL	4–E15,6
99–02	Y T&T WHL (N37)	26061693	1	310.03	MOTOR, STRG COL TLSCP ACTR	4–E20,35
97–02	Y	26036521	2	3.38	PIN, STRG COL PIV	4–E17,26
97–02	Y	26036317	1	3.38	PIN, STRG COL TILT LK REL LVR PIV	
97–02	Y	5698410	1	4.98	SPRING, STRG COL TILT LK REL LVR	
99–02	Y T&T WHL (N37)	26061700	1	28.10	SWITCH, STRG COL TLSCP	4–E20,30

6.515 NUT, Steering Wheel

97–02	Y	26056108	1	3.38	NUT, STRG WHL (M14X1.5) (HFH TORQ PREV)	4–E15,3

cardiagn.com

6.518 BOLT – BUMPER – COLUMN – COVER – COVER KIT – GUIDE – HOUSING – JACKET – PLUG – RING – SHROUD – SPRING – SUPPORT, Steering

97–02	Y	26036497	4	3.38	BOLT, STRG COL LWR TR CVR (M5X.8X15) (PAN HD TORX TAP) (06.760)	4–E17,5
01–02	YY07–67 4–SPD A/TRANS (M30), (EXC STRG COL (NP7) (EXPORT)	26014529	1	4.83	BOLT, STRG COL LWR TR CVR (M5X.8X11.5) (06.522)	4–F2,28
01–02	YY37 MANUAL 6 SPD O/D TRANS, TREMEC (M12), (EXC STRG COL (NP7) (EXPORT)	26014529	1	4.83	BOLT, STRG COL LWR TR CVR (M5X.8X11.5) (06.522)	4–F2,28
98–02	Y	26036496	1	3.33	BOLT, STRG COL UPR CVR (M4.55 TAP X15) (EXT TORX FLG HD) (02.188)	4–E20,17
97–02	Y	26035863	1	3.38	BUMPER, STRG COL HSG (NATURAL) (7.2MM HEIGHT)	4–E17,25
99–02	Y07–67 T&T WHL (N37)	26066598	1	5.87	BUMPER, STRG COL HSG	4–E17,25
00–02	Y07–67 (EXC T&T WHL (N37)	26036090	1	3.38	BUMPER, STRG COL HSG (PINK) (4.3MM HEIGHT)	4–E24,31
00–02	Y37	26036090	1	3.38	BUMPER, STRG COL HSG (PINK) (4.3MM HEIGHT)	4–E24,31
97–98	Y	26047460	1	1027.89	COLUMN, STRG	2–K7,13
98	Y07–67 STRG COL (NP7) (EXPORT)	26071322	1	1183.42	COLUMN, STRG	2–K7,13
99–00	Y T&T WHL (N37)	26070623	1	1423.23	COLUMN, STRG	2–K7,13
99–00	Y07–67 (EXC STRG COL (NP7) (EXPORT), T&T WHL (N37)	26070622	1	1183.95	COLUMN, STRG	2–K7,13
99–00	Y07–67 STRG COL (NP7) (EXPORT)	26070623	1	1183.95	COLUMN, STRG	2–K7,13
99	Y37 P/S (VARIABLE) (NV7)	26070622	1	1183.95	COLUMN, STRG	2–K7,13
00	Y37	26070622	1	1183.95	COLUMN, STRG	2–K7,13
01	Y07–67 6–SPD M/TRANS (MM6), (EXC STRG COL (NP7) (EXPORT), T&T WHL (N37)	26079636	1	910.34	COLUMN, STRG	2–K7,13
01	Y07–67 6–SPD M/TRANS (MM6), T&T WHL (N37)	26079640	1	1423.23	COLUMN, STRG	2–K7,13
01	Y07–67 4–SPD A/TRANS (M30), T&T WHL (N37)	26080425	1	1423.23	COLUMN, STRG	2–K7,13
01	Y07–67 4–SPD A/TRANS (M30), (EXC STRG COL (NP7) (EXPORT), T&T WHL (N37)	26080430	1	910.34	COLUMN, STRG	2–K7,13
01	Y37 MANUAL 6 SPD O/D TRANS, TREMEC (M12)	26079636	1	910.34	COLUMN, STRG	2–K7,13
02	Y07–67 6–SPD M/TRANS (MM6), T&T WHL (N37)	26094231	1	1402.20	COLUMN, STRG	2–K7,13
02	Y07–67 4–SPD A/TRANS (M30), T&T WHL (N37)	26094232	1	1402.20	COLUMN, STRG	2–K7,13
02	Y07–67 6–SPD M/TRANS (MM6), (EXC STRG COL (NP7) (EXPORT), T&T WHL (N37)	26094233	1	896.88	COLUMN, STRG	2–K7,13
02	Y07–67 4–SPD A/TRANS (M30), (EXC STRG COL (NP7) (EXPORT), T&T WHL (N37)	26094235	1	896.88	COLUMN, STRG	2–K7,13
02	Y37 MANUAL 6 SPD O/D TRANS, TREMEC (M12)	26094233	1	896.88	COLUMN, STRG	2–K7,13

cardiagn.com

6.518 BOLT – BUMPER – COLUMN – COVER – COVER KIT – GUIDE – HOUSING – JACKET – PLUG – RING – SHROUD – SPRING – SUPPORT, Steering (Con't)

99–02	Y07–67 T&T WHL (N37)	26080362	1	152.94	COVER KIT, STRG COL TR (INCLS UPR & LWR COVERS)	
97–02	Y	26050878	1	30.69	COVER, STRG COL LWR TR	4–E17,4
97–02	Y	26050879	1	30.69	COVER, STRG COL UPR TR	4–E17,1
99–02	Y T&T WHL (N37)	26052095	1	3.38	GUIDE, STRG COL HSG SUPT ..	4–E20,57
97–02	Y	26043199	1	185.19	HOUSING, STRG COL (INCLS UPPER BRG)	4–E17,15
97–98	Y	26050872	1	139.41	JACKET, STRG COL	4–E17,30
99–02	Y T&T WHL (N37)	26061677	1	490.03	JACKET, STRG COL	4–E17,30
99–02	Y07–67 (EXC T&T WHL (N37)	26050872	1	139.41	JACKET, STRG COL	4–E17,30
99–02	Y37	26050872	1	139.41	JACKET, STRG COL	4–E17,30
99–02	Y07–67 T&T WHL (N37)	7840594	1	3.38	PLUG, STRG COL JKT HOLE	4–E20,52
99–02	Y T&T WHL (N37)	26052097	1	3.38	RING, STRG COL HSG SUPT GDE SPR RET	4–E20,55
99–02	Y07–67 T&T WHL (N37)	26064446	1	14.09	SHROUD, STRG COL	4–E20,29
99–02	Y T&T WHL (N37)	26052103	1	3.38	SPRING, STRG COL HSG SUPT GDE	4–E20,56
97–98	Y	26036309	1	54.88	SUPPORT, STRG COL HSG (CODE SSW, SSY, SSZ, STA, STC, STF, STH, STJ,)	4–E17,29
99–02	Y07–67 (EXC T&T WHL (N37)	26036309	1	54.88	SUPPORT, STRG COL HSG (CODE SSW, SSY, SSZ, STA, STC, STF, STH, STJ,)	4–E17,29
99–02	Y07–67 T&T WHL (N37)	26068561	1	79.07	SUPPORT, STRG COL HSG	4–E17,29
99–02	Y37	26036309	1	54.88	SUPPORT, STRG COL HSG (CODE SSW, SSY, SSZ, STA, STC, STF, STH, STJ,)	4–E17,29
	*EXPORT**********EXPORT**********EXPORT**********EXPORT**********EXPORT*					
01	Y STRG COL (NP7) (EXPORT)	26079637	1	910.34	COLUMN, STRG	2–K7,13
02	Y STRG COL (NP7) (EXPORT)	26094234	1	896.88	COLUMN, STRG	2–K7,13

6.521 ACTUATOR – BEARING – BEARING KIT – BOLT – BRACKET – CABLE – CAM – NUT – RETAINER – SEAT – SPRING – WASHER, Steering Column

99–02	Y T&T WHL (N37)	26061673	1	335.00	ACTUATOR, STRG COL TLSCP (06.514)	4–E20,44
97–02	Y	26001827	2	31.00	BEARING KIT, STRG SHF UPR (W/RACE)	4–E17,2
97–98	Y	26052051	1	16.07	BEARING, STRG SHF LWR (W/ADAPTER)	4–E17,31
99–02	Y	26077389	1	31.74	BEARING, STRG SHF LWR (W/ADAPTER)	4–E17,31
97–98	Y	10285245	4	3.33	BOLT, STRG COL BRKT (M8X1.25X47.91MM) (DOUBLE END STUD) (STRG COL ATTACH)	4–F14,34
97	Y	11514139	6	*1.08	BOLT, STRG COL BRKT (TO UPR & LWR BEAM) (M6X1X25) (08.900) .	
99–02	Y	10285245	2	3.33	BOLT, STRG COL BRKT (M8X1.25X47.91MM) (DOUBLE END STUD) (STRG COL ATTACH)	4–F14,34
99–02	Y	10413346	2	3.33	BOLT, STRG COL BRKT (M8X1.25X31.48MM) (DOUBLE END ROUND COLLAR STUD) .	4–F14,36
99–02	Y T&T WHL (N37)	26061694	1	11.76	BRACKET, STRG COL TLSCP ACTR (06.514)	4–E20,37
99–02	Y T&T WHL (N37)	26061676	1	19.66	CABLE, STRG COL TLSCP ACTR (06.514)	4–E20,46

cardiagn.com

6.521 ACTUATOR – BEARING – BEARING KIT – BOLT – BRACKET – CABLE – CAM – NUT – RETAINER – SEAT – SPRING – WASHER, Steering Column (Con't)

01–02	Y07–67 4–SPD A/TRANS (M30), (EXC STRG COL (NP7) (EXPORT)	26049186	1	3.38	CAM, STRG COL ORIENT PLT ...	
97–02	Y	25606907	4	3.33	NUT, STRG COL BRKT (STRG COL ATCH) (SPL NUT M8 X 1.25) (06.760)	4–F14,35
97–02	Y	26050877	1	3.38	RETAINER, STRG SHF LWR BRG (06.522)	4–E17,33
99–02	Y T&T WHL (N37)	7847029	2	9.44	RETAINER, STRG SHF LWR BRG SPR	4–E20,50
97–99	Y	7815184	1	4.75	SEAT, STRG SHF UPR BRG RACE .	4–E17,13
00–02	Y	26090233	1	7.05	SEAT, STRG SHF UPR BRG RACE .	4–E20,6
97–98	Y	26058800	1	3.38	SPRING, STRG COL TILT	4–E17,28
99–02	Y	26078240	1	4.77	SPRING, STRG COL TILT	4–E17,28
97–02	Y	26055299	1	3.33	SPRING, STRG SHF UPR BRG ..	4–E17,12
99–02	Y T&T WHL (N37)	7841408	1	8.75	WASHER, STRG SHF THR (LWR)	

6.522 CONNECTOR – RETAINER – SENSOR, Steering Column

99–00	Y	12125678	1	35.19	CONNECTOR, SEN–STRG WHL POSN (6–WAY F, W/LEADS) (09.172) (AC–DELCO #PT590)	
99–02	Y T&T WHL (N37)	26067485	1	3.38	RETAINER, STRG COL TLSCP ACTR MOT WRG HARN CONN (06.514)	4–E20,34
02	YY07–67 6–SPD M/TRANS (MM6), 4–SPD A/TRANS (M30), T&T WHL (N37)	26067485	1	3.38	RETAINER, STRG COL TLSCP ACTR MOT WRG HARN CONN (06.514)	4–E20,34
97–98	Y	26055808	1	191.43	SENSOR, STRG WHL POSN	4–E17,32
99–00	Y	26058286	1	191.43	SENSOR, STRG WHL POSN	4–E17,32
01–02	Y	26059047	1	65.71	SENSOR, STRG WHL POSN	4–F2,62

6.524 SHAFT, Steering Column

97–98	Y	26050875	1	37.71	SHAFT, LWR STRG	4–E17,23
99–02	Y (EXC STRG COL (NP7) (EXPORT), T&T WHL (N37) .	26071859	1	221.61	SHAFT, LWR STRG	4–E17,23
99–02	Y07–67 T&T WHL (N37)	26061696	1	405.75	SHAFT, LWR STRG	4–E17,23
97–98	Y	26068266	1	118.60	SHAFT, S/GR CPLG	4–F11,23
99–02	Y	26057539	1	221.61	SHAFT, S/GR CPLG	4–F14,23
97	Y	26064247	1	46.30	SHAFT, UPR STRG (06.500)	4–E17,18
98	Y (EXC STRG COL (NP7) (EXPORT)	26064247	1	46.30	SHAFT, UPR STRG (06.500)	4–E17,18
98–02	Y STRG COL. (NP7) (EXPORT)	26073574	1	133.17	SHAFT, UPR STRG	4–E17,18
99–02	Y07–67 (EXC STRG COL (NP7) (EXPORT)	26064247	1	46.30	SHAFT, UPR STRG (06.500)	4–E17,18
01–02	Y37	26064247	1	46.30	SHAFT, UPR STRG (06.500)	4–E17,18

6.525 BOLT – NUT – SEAL – SHIELD – SPACER – SPHERE KIT, Steering Gear Shaft

97–02	Y	7847298	1	9.79	BOLT, INTER STRG SHF (POSN #2) (10X1.5X40.3)	4–F11,24
97–98	Y	26005756	1	3.33	BOLT, INTER STRG SHF (POSN #1) (M10X1.5X31) (HFH NYLON LOCK) (6 POINT HEAD)	4–F11,27

cardiagn.com

6.525 BOLT – NUT – SEAL – SHIELD – SPACER – SPHERE KIT, Steering Gear Shaft (Con't)

99–02	Y	26038124	1	3.33	BOLT, INTER STRG SHF (POSN #1) (M10X1.5X36) (HFH W/RETAINER NYLON LOCK) (UPR TO STRG COL)	4–F14,27
99–02	Y	11514597	1	3.50	NUT, INTER STRG SHF (HFH, 10X1.5 6H, 9.8 THK, 21.8 OD, 510M (10) ZF 7111M) (01.062)	
97–02	Y	26056695	1	18.25	SEAL, STRG SHF	4–E20,47
97–02	Y	10285915	1	4.47	SHIELD, S/GR CPLG	4–F11,25
00	Y37 (EXC P/S (VARIABLE) (NV7)	26062883	1	9.42	SPACER, STRG SHF	
97–02	Y	26057095	1	4.60	SPHERE KIT, STRG SHF (INCLS SPR JOINT PRELOAD)	4–E17,1
99–00	Y	26066321	1	4.47	SPHERE KIT, STRG SHF	4–E17,1
02	Y	26066321	1	4.47	SPHERE KIT, STRG SHF	4–E17,1

6.600 COOLER, Power Steering Fluid

97–00	Y SOFT RIDE SUSP (FE1)	26047343	1	27.83	COOLER, P/S FLUID	4–F11,11
97–00	Y SPORT SUSP (FE3)	26088760	1	142.54	COOLER, P/S FLUID	4–F11,13
01–02	Y SOFT RIDE SUSP (FE1)	26076354	1	27.83	COOLER, P/S FLUID	4–F14,11
01–02	Y SPORT SUSP (FE3), SPECIAL SUSP (FE4)	26088744	1	142.54	COOLER, P/S FLUID	4–F14,13

6.602 BOLT – CLAMP – CLIP – SEAL, Steering Fluid Cooler

97–01	Y	11516413	4	3.33	BOLT, P/S FLUID CLR (M6X1X25, 23, 17 OD) (08.900)	4–F11,14
02	Y	10094385	2	3.33	BOLT, P/S FLUID CLR (BLACK) (M6X1X25) (02.559)	4–F14,14
97–99	Y SOFT RIDE SUSP (FE1)	22527587	1	3.33	CLAMP, P/S FLUID CLG HOSE (WORM GEAR, 1/2–13/16) (08.948)	4–F11,9
97–00	Y SOFT RIDE SUSP (FE1)	26034793	2	4.47	CLIP, P/S FLUID CLG PIPE (06.672)	4–F14,30
01–02	Y SOFT RIDE SUSP (FE1)	26034793	1	4.47	CLIP, P/S FLUID CLG PIPE (06.672)	4–F14,30
97–02	Y	26001594	1	*2.55	SEAL, P/S FLUID CLG PIPE (O RING) (7.65MM IDX1.63MM THK) (06.674)	4–F11,10

6.605 PUMP, Power Steering

97–02	Y	26046503	1	232.44	PUMP, P/S	4–F9,1

6.606 BOLT – BRACE – BRACKET, Steering Pump Mounting

97–02	Y	14078896	2	3.33	BOLT, P/S PUMP BRKT (M8X1.25X84MM) (03.275)	4–F11,18
97–99	Y 5.7G (LS1)	12555693	1	5.85	BRACE, P/S PUMP FRT	4–F11,19
00	Y 5.7G (LS1), (1ST DES)	12555693	1	5.85	BRACE, P/S PUMP FRT (W/FRT BRACES, NO COMPATABLE 2ND DESIGN)	4–F11,19
01–02	Y 5.7G (LS1)	12555693	1	5.85	BRACE, P/S PUMP FRT	4–F11,19
97–02	Y	12555220	1	55.81	BRACKET, GEN & P/S PUMP (02.277)	4–F11,5

6.608 PIN, Steering Pump

97–02	Y	7839990	1	5.75	PIN, P/S PUMP PRESS PLT	4–F9,19
97–02	Y	7839991	1	5.04	PIN, P/S PUMP THR PLT	4–F9,12

cardiagn.com

6.612 PLATE – RING – SPRING, Steering Pump

97–02	Y	26002915	1	45.00	PLATE, P/S PUMP PRESS	4–F9,11
97–02	Y	7839992	1	6.68	RING, P/S PUMP THR PLT RET	4–F9,18
97–02	Y	7839988	1	9.30	SPRING, P/S PUMP PRESS PLT	4–F9,22

6.614 SHAFT, Steering Pump

97–02	Y	26045548	1	42.66	SHAFT, P/S PUMP	4–F9,3

6.616 BEARING – RING, Steering Pump Drive Shaft Outer Bearing Retainer

97–02	Y	26001378	1	33.00	BEARING, P/S PUMP SHF	4–F9,4
97–02	Y	7842662	1	9.85	RING, P/S PUMP SHF BRG RET	4–F9,5

6.617 SEAL, Steering Pump Drive Shaft

97–02	Y	26033537	1	3.38	SEAL, P/S PUMP SHF	4–F9,2

6.624 CONNECTOR – FITTING – SPRING, Steering Pump Control

98–01	Y	12125678	1	35.19	CONNECTOR, SEN–STRG ANGLE (6–WAY F, W/LEADS) (09.172) (AC–DELCO #PT590)	
01–02	YY67	12125678	1	35.19	CONNECTOR, SEN–STRG ANGLE (6–WAY F, W/LEADS) (09.172) (AC–DELCO #PT590)	
97–02	Y	26056501	1	27.77	FITTING, P/S PUMP	4–F9,9
97–02	Y	5688037	1	4.68	SPRING, P/S PUMP FLOW C/VLV (06.612)	4–F9,6

6.635 BRACKET – CAP – RESERVOIR – SEAL, Steering Pump

97–02	Y	12555222	1	3.38	BRACKET, P/S FLUID RSVR	4–F11,22
97–01	Y	26022453	1	19.44	CAP, P/S FLUID RSVR (AC–DELCO #36–7140)	4–F11,1
02	Y	26095119	1	22.24	CAP, P/S FLUID RSVR (AC–DELCO #36–7259)	4–F14,1
97–02	Y	26046502	1	31.21	RESERVOIR, P/S FLUID	4–F11,2
97–02	Y	26020642	1	5.63	SEAL, P/S PUMP RSVR (O RING) (14.5 I.D.)	4–F9,8

6.655 CAP – PULLEY, Steering Pump

97	Y	10077300	1	3.38	CAP, P/S PUMP PUL HUB	4–F11,17
98–02	Y	10185925	1	3.45	CAP, P/S PUMP PUL HUB (7.1 DIA, 33MM) (PAINT TO MATCH) (15.100)	4–F14,17
97–02	Y	12559890	1	12.86	PULLEY, P/S PUMP	4–F11,16

6.670 HOSE – PIPE, Steering Gear Oil Pressure

97–02	Y	26046501	1	35.54	HOSE, P/S GR INL	4–F11,8
97–02	Y	26056779	RH	25.58	PIPE, S/GR (SHORT)	4–E12,11
97–02	Y	26056780	LH	25.58	PIPE, S/GR (LONG)	4–E12,10

6.671 HOSE – TUBE, Steering Gear Oil Return

97–02	Y	26046910	1	15.48	HOSE, P/S FLUID RSVR INL	4–F11,4
97–02	Y	26006074	1	25.63	TUBE, P/S PUMP INL	4–F9,23

cardiagn.com

6.672 CLAMP – CLIP, Steering Gear/Pump Oil

97–98	Y	26028657	2	3.33	CLAMP, P/S FLUID RSVR HOSE (AT P/S PUMP)	4–F11,3
98–02	Y	26028657	2	3.33	CLAMP, P/S FLUID RSVR INL HOSE	4–F11,3
97–00	Y SOFT RIDE SUSP (FE1)	26034793	2	4.47	CLIP, P/S GR OTLT PIPE	4–F11,30

6.674 SEAL, Steering Gear

97–02	Y	26001594	2	*2.55	SEAL, P/S GR INL HOSE (O RING) (7.65MM IDX1.63MM THK)	4–F11,7
00–02	Y	26020642	1	5.63	SEAL, P/S PUMP FTG (O RING) (14.5 I.D.) (06.635)	
97–99	Y07	26015539	2	4.36	SEAL, S/GR PIPE (O RING)	4–E12,12
98–99	Y67	26015539	2	4.36	SEAL, S/GR PIPE (O RING)	4–E12,12
99	Y37	26015539	2	4.36	SEAL, S/GR PIPE (O RING)	4–E12,12
00–02	Y	26015539	2	4.36	SEAL, S/GR PIPE (O RING)	4–E12,12

6.758 SEAL, Steering Column

97–98	Y	10253854	1	14.09	SEAL, STRG COL	4–F11,28
99–02	Y	10306326	1	14.09	SEAL, STRG COL	4–F14,28

6.760 BRACKET – SHIM, Steering Column Attaching

97–02	Y	10402879	1	155.02	BRACKET, STRG COL (#52)	3–H22,4
97–02	Y	10250273	1	3.38	SHIM, STRG COL UPR SUPT	4–F14,31

6.807 COVER, Steering Gear Housing Side

97–02	Y	7846884	1	15.92	COVER, S/GR HSG (06.824)	4–E12,14

6.832 NUT, Steering Gear Adjusting

97–01	Y	7819367	1	7.58	NUT, S/GR RACK ADJR (M32X1.5) (HEX) (06.822)	

6.865 RING, Steering Linkage

97–02	Y	7831234	2	6.43	RING, S/GR SHF DPNR (R&P) (R&P)	4–E12,9

cardiagn.com

7.006 SEAL, Frame Side

99–02	Y	14064578	6	3.33	SEAL, U/B FRT S/RL (09.665) ...	

7.010 CROSSMEMBER, Front Frame Cross Member

97–00	Y	10266822	1	707.00	CROSSMEMBER, FRT	1–J23,5
01	Y	10312076	1	707.00	CROSSMEMBER, FRT	1–J24,5
02	Y	10319530	1		CROSSMEMBER, FRT	1–J24,5

7.014 BOLT – CROSSMEMBER – NUT, Rear Frame Cross

97–01	Y	10281321	2	8.75	BOLT, RR C/MBR (RR BOLT, POSN #2)	4–G8,6
97–01	Y	10281322	2	9.70	BOLT, RR C/MBR (FRT BOLT, POSN #1)	4–G8,3
02	Y (1ST DES)	10281321	2	8.75	BOLT, RR C/MBR (RR BOLT, POSN #2) (W/HEX FLANGE HEAD W/WASHER, FOR 2ND DSGN SEE 11518498)	4–G8,6
02	Y (1ST DES)	10281322	2	9.70	BOLT, RR C/MBR (FRT BOLT, POSN #1) (W/HEX FLANGE HEAD W/WASHER, FOR 2ND DSGN SEE 11518499)	4–G8,3
02	Y (2ND DES)	11518498	2		BOLT, RR C/MBR (RR BOLT, POSN #2) (08.900) (W/SLAB HEAD, FOR 1ST DSGN SEE 10281321) .	
02	Y (2ND DES)	11518499	2		BOLT, RR C/MBR (FRT BOLT, POSN #1) (08.900) (W/SLAB HEAD, FOR 1ST DSGN SEE 10281322) .	
97	Y	10266823	1	649.00	CROSSMEMBER, RR (CAST ALUM)	4–G8,73
98	Y (EXC FRT ABS BRAKE LOC (JAG)	10266823	1	649.00	CROSSMEMBER, RR (CAST ALUM)	4–G8,73
98	Y FRT ABS BRAKE LOC (JAG)	10266824	1	649.00	CROSSMEMBER, RR	4–G8,73
99–02	Y	10266824	1	649.00	CROSSMEMBER, RR	4–G8,73
97–02	Y	3537773	4	*1.80	NUT, RR C/MBR (M14X2X11.92) (HEX W/CONICAL WA PREV TORQ) (05.383)	4–G8,68

7.039 BOLT – BRACKET – LOCATOR – NUT – RIVET, Frame Front Cross Member

97–01	Y	10281325	2	12.57	BOLT, FRT C/MBR (RR BOLT, POSN#2)	
97–01	Y	10281326	2	12.57	BOLT, FRT C/MBR (FRT BOLT, POSN#1)	
02	Y (1ST DES)	10281325	2	12.57	BOLT, FRT C/MBR (RR BOLT, POSN#2) (W/HEX FLANGE HEAD W/WASHER, FOR 2ND DSGN SEE 11518500)	
02	Y (1ST DES)	10281326	2	12.57	BOLT, FRT C/MBR (FRT BOLT, POSN#1) (W/HEX FLANGE HEAD W/WASHER, FOR 2ND DSGN SEE 11518501)	
02	Y (2ND DES)	11518500	2		BOLT, FRT C/MBR (RR BOLT, POSN#2) (08.900) (W/SLAB HEAD, FOR 1ST DSGN SEE) ..	
02	Y (2ND DES)	11518501	2		BOLT, FRT C/MBR (FRT BOLT, POSN#1) (08.900) (W/SLAB HEAD, FOR 1ST DSGN SEE 10281326)	

© 2001 GENERAL MOTORS SERVICE PARTS OPERATIONS–CHEVROLET–15Y

cardiagn.com

7.039 BOLT – BRACKET – LOCATOR – NUT – RIVET, Frame Front Cross Member (Con't)

97–02	Y	10257865	LH	7.75	BRACKET, FRT C/MBR (RR)	4–G4,25
97–02	Y	10257866	RH	7.75	BRACKET, FRT C/MBR (REAR)	4–G4,37
97–02	Y	10260651	LH	6.70	BRACKET, FRT C/MBR (FRT)	4–G4,26
97–02	Y	10260652	RH	6.70	BRACKET, FRT C/MBR (FRT)	4–G4,36
97–02	Y	10257867	LH	8.75	BRACKET, RR C/MBR (FRONT)	4–G4,13
97–02	Y	10257868	RH	8.75	BRACKET, RR C/MBR (FRONT)	4–G4,19
97–02	Y	10260655	LH	6.70	BRACKET, RR C/MBR (REAR)	4–G4,6
97–02	Y	10260656	RH	6.70	BRACKET, RR C/MBR (REAR)	4–G4,18
97–02	Y	10280876	4	3.45	LOCATOR, FRT C/MBR	4–G4,5
97–02	Y	10280876	4	3.45	LOCATOR, RR C/MBR	4–G4,5
97–02	Y	3537773	4	*1.80	NUT, FRT C/MBR (M14X2X11.92) (HEX W/CONICAL WA PREV TORQ) (05.383)	
97–02	Y	10274355	4	*.52	RIVET, FRT C/MBR REINF (10.512)	4–G8,4
97–02	Y	10274355	4	*.52	RIVET, RR C/MBR BR (C/MBR BOLTS TO RAIL) (10.512)	4–G8,4

7.068 BRACKET – HOOK – RIVET, Towing

97–02	Y	10414186	2	3.45	BRACKET, FRT TIE DN	4–G4,15
97–02	Y	10414186	2	3.45	BRACKET, RR TIE DN	4–G4,15
97–02	Y	10285827	4	3.45	RIVET, FRT TIE DN BRKT (11.419)	4–G4,15
97–02	Y	10285827	4	3.45	RIVET, RR TIE DN BRKT (11.419)	4–G4,15
	*EXPORT**********EXPORT**********EXPORT**********EXPORT**********EXPORT*					
97–02	Y FRT TOW HOOK (V76)	10281051	1	59.25	HOOK, FRT TOW	4–G4,30
97–02	Y FRT TOW HOOK (V76)	10281052	1	59.25	HOOK, RR TOW	4–G4,2

7.240 LINK – NUT, Stabilizer Shaft

97–99	Y	10423035	2	19.75	LINK, FRT STAB SHF	4–G8,51
00–01	Y SOFT RIDE SUSP (FE1)	10423035	2	19.75	LINK, FRT STAB SHF	4–G8,51
00	Y SPORT SUSP (FE3)	10424745	2	58.75	LINK, FRT STAB SHF	4–E4,28
01	Y SPORT SUSP (FE3), SPECIAL SUSP (FE4)	10424745	2	58.75	LINK, FRT STAB SHF	4–E4,28
02	Y	10435298	2		LINK, FRT STAB SHF	4–G8,51
97–01	Y	10423035	2	19.75	LINK, RR STAB SHF	4–G8,51
02	Y	10435298	2		LINK, RR STAB SHF	4–G8,51
97	Y	3537772	4	*1.45	NUT, FRT STAB SHF LINK (M12.0X1.75X10.6) (08.917)	

7.241 SHAFT, Stabilizer

97–02	Y SOFT RIDE SUSP (FE1)	10227075	1	56.50	SHAFT, FRT STAB (HOLLOW BAR)	4–E4,31
97–99	Y SPORT SUSP (FE3)	10234745	1	78.50	SHAFT, FRT STAB (HOLLOW BAR)	4–E4,31
00–02	Y SPORT SUSP (FE3)	10424741	1	153.00	SHAFT, FRT STAB	4–E4,31
01–02	Y SPECIAL SUSP (FE4)	10419094	1	96.90	SHAFT, FRT STAB (AC–DELCO #10419094)	4–E4,31
97–02	Y SOFT RIDE SUSP (FE1)	10283944	1	43.75	SHAFT, RR STAB	4–G8,49
97–99	Y SPORT SUSP (FE3)	10283945	1	43.75	SHAFT, RR STAB	4–G8,49
00	Y SPORT SUSP (FE3)	10424743	1	78.50	SHAFT, RR STAB	4–G8,49
01–02	Y SPORT SUSP (FE3), SPECIAL SUSP (FE4)	10424743	1	78.50	SHAFT, RR STAB	4–G8,49

cardiagn.com

7.242 BOLT – CLAMP, Stabilizer Shaft

97–02	Y	1638817	4	3.33	BOLT, FRT STAB SHF INSL CLA (HEX W/CON WA–10X1.5X25) (06.525)	4–E4,34
97–02	Y	11515807	2	3.33	BOLT, RR STAB SHF INSL CLA (UPR) (08.900)	4–G8,46
97–02	Y	10254830	2	9.10	CLAMP, FRT STAB SHF INSL	4–E4,33
97–02	Y	10426591	2	4.85	CLAMP, RR STAB SHF INSL	4–G8,45

7.243 INSULATOR, Stabilizer Shaft

97–02	Y SOFT RIDE SUSP (FE1)	10280525	2	7.55	INSULATOR, FRT STAB SHF	4–E4,32
97–99	Y SPORT SUSP (FE3)	10280526	2	7.55	INSULATOR, FRT STAB SHF	4–E4,32
00–01	Y SPORT SUSP (FE3)	10424742	2	7.55	INSULATOR, FRT STAB SHF	4–E4,32
01–02	Y SPECIAL SUSP (FE4)	10419095	2	6.58	INSULATOR, FRT STAB SHF (AC–DELCO #10419095)	4–E4,32
97–99	Y SPORT SUSP (FE3)	10401553	2	12.05	INSULATOR, RR STAB SHF	4–G8,48
97–02	Y SOFT RIDE SUSP (FE1)	10431950	2	12.05	INSULATOR, RR STAB SHF	4–G8,48
00	Y SPORT SUSP (FE3)	10431951	2	12.05	INSULATOR, RR STAB SHF (OIL IMPREGNATED RUBBER, WHEN PART NUMBER CHANGES, REPLACE BOTH LEFT AND RIGHT INSULATORS AS PAIR)	4–G8,48
01–02	Y SPORT SUSP (FE3), SPECIAL SUSP (FE4)	10431951	2	12.05	INSULATOR, RR STAB SHF	4–G8,48

7.345 ABSORBER, Shock

97–02	Y SOFT RIDE SUSP (FE1), (EXC CHASSIS, REALTIME DAMPING (F45)	10431989	2	103.00	ABSORBER, FRT SHK	4–E4,13
97–02	Y SPORT SUSP (FE3)	10431990	2	103.00	ABSORBER, FRT SHK	4–E4,13
97–98	Y SOFT RIDE SUSP (FE1), CHASSIS, REALTIME DAMPING (F45)	22064825	LH	571.00	ABSORBER, FRT SHK (AC–DELCO #580–122) (REACTEK)	4–E4,44
97–02	Y SOFT RIDE SUSP (FE1), CHASSIS, REALTIME DAMPING (F45)	22064826	RH	571.00	ABSORBER, FRT SHK (AC–DELCO #580–123) (REACTEK)	4–E4,44
99–02	Y07–67 SOFT RIDE SUSP (FE1), CHASSIS, REALTIME DAMPING (F45)	22064825	LH	571.00	ABSORBER, FRT SHK (AC–DELCO #580–122) (REACTEK)	4–E4,44
01–02	Y SPECIAL SUSP (FE4)	10419093	2	155.00	ABSORBER, FRT SHK (AC–DELCO #540–55) (REACTEK)	
97	Y SPORT SUSP (FE3)	10416669	2	155.00	ABSORBER, RR SHK (AC–DELCO #10416669) (REACTEK)	4–G8,33
97–02	Y SOFT RIDE SUSP (FE1), (EXC CHASSIS, REALTIME DAMPING (F45)	10431991	2	155.00	ABSORBER, RR SHK (COLOR CODE ORANGE) (AC–DELCO #560–200) (REACTEK)	4–G8,33
97–98	Y SOFT RIDE SUSP (FE1), CHASSIS, REALTIME DAMPING (F45)	22064827	LH	570.00	ABSORBER, RR SHK (AC–DELCO #580–124) (REACTEK)	4–G8,23
97–02	Y07–67 SOFT RIDE SUSP (FE1), CHASSIS, REALTIME DAMPING (F45)	22064828	RH	570.00	ABSORBER, RR SHK (AC–DELCO #580–125) (REACTEK)	4–G8,23
98–02	Y SPORT SUSP (FE3)	10416669	2	155.00	ABSORBER, RR SHK (COLOR CODE WHITE) (AC–DELCO #10416669) (REACTEK)	4–G8,33
99–02	Y07–67 SOFT RIDE SUSP (FE1), CHASSIS, REALTIME DAMPING (F45)	22064827	LH	570.00	ABSORBER, RR SHK (AC–DELCO #580–124) (REACTEK)	4–G8,23

cardiagn.com

7.345 ABSORBER, Shock (Con't)

01–02	Y SPECIAL SUSP (FE4)	10419096	2	152.68	ABSORBER, RR SHK (COLOR CODE GREEN) (AC–DELCO #540–54) (REACTEK)	
02	YY37 SPECIAL SUSP (FE4) .	10314571	2		ABSORBER, RR SHK	

7.347 BOLT, Shock Absorber/Strut

97–02	Y	14048990	2	6.85	BOLT, RR S/ABS (M16X2X100, 9.8) (05.416)	4–G8,24

7.380 BRACKET, Shock Absorber

97–02	Y	10262061	LH	11.15	BRACKET, FRT S/ABS LWR	4–G4,21
97–02	Y	10262062	RH	11.15	BRACKET, FRT S/ABS LWR	4–G4,41
97–02	Y	10421159	LH	17.10	BRACKET, RR S/ABS LWR	4–G4,8
97–02	Y	10421160	RH	17.10	BRACKET, RR S/ABS LWR	4–G4,48

7.388 INSULATOR, Shock Absorber/Strut

97–02	Y	10157967	2	3.40	INSULATOR, FRT S/ABS (SMALL, UPR)	4–G8,20
00–02	Y (EXC CHASSIS, REALTIME DAMPING (F45)	10157966	2	3.40	INSULATOR, FRT S/ABS	4–G8,21
97–02	Y	10157966	2	3.40	INSULATOR, RR S/ABS LWR	4–G8,21
97–02	Y	10157967	2	3.40	INSULATOR, RR S/ABS UPR	4–G8,20
02	YY37	10157967	2	3.40	INSULATOR, RR S/ABS UPR (SMALL, UPR)	4–G8,20
02	YY37 SPECIAL SUSP (FE4) .	10284724	2		INSULATOR, RR S/ABS UPR	4–G8,20

7.389 RETAINER, Shock Absorber/Strut

97–02	Y	14093133	4	1.75	RETAINER, FRT S/ABS INSL	4–G8,19
97–99	Y	14093133	2	1.75	RETAINER, RR S/ABS UPR INSL	4–G8,19
00–02	Y	14071397	2	2.05	RETAINER, RR S/ABS UPR INSL	4–G8,19

7.395 BRACKET – REINFORCEMENT, Shock Absorber/Strut

02	Y	10318764	LH		BRACKET, FRT S/ABS UPR	4–G4,23
02	Y	10318765	RH		BRACKET, FRT S/ABS UPR	4–G4,34
97–02	Y	10274240	RH	8.25	REINFORCEMENT, FRT S/ABS BRKT (REF 1X195716A, UPPER) .	4–G4,42
97–02	Y	10413182	LH	1.60	REINFORCEMENT, FRT S/ABS BRKT (LOWER)	4–G4,22
97–02	Y	10413183	RH	1.60	REINFORCEMENT, FRT S/ABS BRKT (LOWER)	4–G4,40
97–02	Y	10414209	LH	8.25	REINFORCEMENT, FRT S/ABS BRKT (REF 1X195502A, UPPER) .	4–G4,20
97–02	Y	10257875	LH	2.30	REINFORCEMENT, RR S/ABS BRKT (UPR) (#101)	4–G4,7
97–02	Y	10257876	RH	2.30	REINFORCEMENT, RR S/ABS BRKT (UPR) (#101)	4–G4,49
97–02	Y	10276073	2	1.35	REINFORCEMENT, RR S/ABS BRKT (LWR)	4–G4,9

7.412 SPRING, Front Chassis

97–02	Y SOFT RIDE SUSP (FE1), (EXC CHASSIS, REALTIME DAMPING (F45)	22178728	1	541.00	SPRING, FRT	4–E4,38
97–00	Y SPORT SUSP (FE3)	22178729	1	541.00	SPRING, FRT (INCLS RIDE HEIGHT ADJUSTER)	4–E4,38

cardiagn.com

7.412 SPRING, Front Chassis (Con't)

97–98	Y SOFT RIDE SUSP (FE1), CHASSIS, REALTIME DAMPING (F45)	22178748	1	541.00	SPRING, FRT	4–E4,38
99–02	Y07–67 SOFT RIDE SUSP (FE1), CHASSIS, REALTIME DAMPING (F45)	22178748	1	541.00	SPRING, FRT	4–E4,38
01–02	Y SPORT SUSP (FE3), SPECIAL SUSP (FE4)	22178729	1	541.00	SPRING, FRT (INCLS RIDE HEIGHT ADJUSTER)	4–E4,38

7.425 BOLT – RETAINER, Front Spring

99–02	Y	3545602	4	3.33	BOLT, FRT SPR RET (M10X12X31) (07.242)	
97–02	Y	10280659	2	4.65	RETAINER, FRT SPR (07.545) ...	4–E4,40

7.440 ACCELEROMETER – BRACKET – CONNECTOR – SENSOR, Hydraulic Suspension

98–99	Y ACTIVE BRAKE CTL (JL4) .	25678191	1	110.00	ACCELEROMETER, VEH LATL ..	4–G14,3
00–01	Y ACTIVE BRAKE CTL (JL4) .	25697709	1	110.00	ACCELEROMETER, VEH LATL ..	4–G14,3
02	Y	25697709	1	110.00	ACCELEROMETER, VEH LATL ..	4–G14,3
98–02	Y ACTIVE BRAKE CTL (JL4) .	10290470	1	3.40	BRACKET, VEH LATL ACCLRM ..	4–G14,2
99–02	Y	12117320	1	25.03	CONNECTOR, SEN–VEH YAW (3–WAY F) (W/LEADS) (02.530) (AC–DELCO #PT1490)	5–G16,17
02	YY67 4–SPD A/TRANS (M30), A/C FRT AUTO/AUX CONT (CJ2), T&T WHL (N37), (EXC TAIL & S/LP (T89) (EXPORT)	12117320	1	25.03	CONNECTOR, SEN–VEH YAW (3–WAY F) (W/LEADS) (02.530) (AC–DELCO #PT1490)	5–G16,17
98–00	Y ACTIVE BRAKE CTL (JL4) .	10277333	1	297.00	SENSOR, VEH YAW	5–F10,27
01–02	Y	10277333	1	297.00	SENSOR, VEH YAW	5–F10,27

7.450 BRACKET – BULB – CONNECTOR – COVER – KNOB – MODULE – RELAY – RETAINER – SWITCH, Electronic Control Suspension

97–02	Y CHASSIS, REALTIME DAMPING (F45)	10280844	1	6.65	BRACKET, ELEK SUSP CONT MDL	4–E4,60
01–02	Y	12160778	1	1.02	CONNECTOR, INLINE–TO ELEK SUSP MDL (BROWN) (24–WAY F) (W/O LEADS) (MIC/PAC 100) (03.670)	4–E4,56
01–02	Y	12160779	1	2.23	CONNECTOR, INLINE–TO ELEK SUSP MDL (BROWN) (32–WAY F, W/O LEADS, MIC/PAC 100) (03.670)	4–E4,56
97–02	Y	12102747	1	21.73	CONNECTOR, INLINE–TO S/ABS CONT ACTR (BLACK) (2–WAY F W/LEADS) (03.670) (AC–DELCO #PT374)	
97	Y	12110207	1	2.28	CONNECTOR, MDL–ELEK SUSP CONT (BLUE) (32–WAY F W/O LEADSS) (03.670)	4–E4,56
97–02	Y	12160778	1	1.02	CONNECTOR, MDL–ELEK SUSP CONT (BROWN) (24–WAY F) (W/O LEADS) (MIC/PAC 100) (03.670)	4–E4,56
97–00	Y	12160779	1	2.23	CONNECTOR, MDL–ELEK SUSP CONT (BROWN) (32–WAY F, W/O LEADS, MIC/PAC 100) (03.670)	4–E4,56

© 2001 GENERAL MOTORS SERVICE PARTS OPERATIONS–CHEVROLET–15Y

cardiagn.com

7.450 BRACKET – BULB – CONNECTOR – COVER – KNOB – MODULE – RELAY – RETAINER – SWITCH, Electronic Control Suspension (Con't)

01–02	Y	12126463	1	45.66	CONNECTOR, SW–ELEK SUSP (BLACK) (2–WAY F) (W/LEADS) (02.530) (AC–DELCO #PT733)	
97	Y07 CHASSIS, REALTIME DAMPING (F45)	10286260	LH	9.60	COVER, ELEK SUSP CONT MDL FIN	4–E4,53
98–00	Y07–67 CHASSIS, REALTIME DAMPING (F45)	10286260	LH	9.60	COVER, ELEK SUSP CONT MDL FIN	4–E4,53
01–02	Y07 CHASSIS, REALTIME DAMPING (F45)	10286260	LH	9.60	COVER, ELEK SUSP CONT MDL FIN	4–E4,53
01–02	Y67 CHASSIS, REALTIME DAMPING (F45), (19I)	10440580	1	9.45	COVER, ELEK SUSP CONT MDL FIN (BLACK)	4–E4,53
01–02	Y67 CHASSIS, REALTIME DAMPING (F45), (92I)	10440581	1	9.45	COVER, ELEK SUSP CONT MDL FIN (PEWTER)	4–E4,53
01–02	Y67 CHASSIS, REALTIME DAMPING (F45), (67I)	10440582	1	9.45	COVER, ELEK SUSP CONT MDL FIN (OAK)	4–E4,53
01–02	Y67 CHASSIS, REALTIME DAMPING (F45), (70I)	10440583	1	9.45	COVER, ELEK SUSP CONT MDL FIN (RED)	4–E4,53
97–98	Y CHASSIS, REALTIME DAMPING (F45)	12198657	1	8.90	KNOB, ELEK SUSP SW	
98–01	YY07–67 CHASSIS, REALTIME DAMPING (F45), ACTIVE BRAKE CTL (JL4)	12198657	1	8.90	KNOB, ELEK SUSP SW	
99	Y07–67 CHASSIS, REALTIME DAMPING (F45), (EXC ACTIVE BRAKE CTL (JL4)	12198657	1	8.90	KNOB, ELEK SUSP SW	
02	YY07–67 CHASSIS, REALTIME DAMPING (F45)	12198657	1	8.90	KNOB, ELEK SUSP SW	
97–99	Y CHASSIS, REALTIME DAMPING (F45), (EXC EUROPEAN PROVISIONS (VD1) (EXPORT)	9360581	1	934.00	MODULE, ELEK SUSP CONT (RTD MODULE/FAST SHOCK) (AC–DELCO #9360581)	4–E4,55
00–02	YY07–67 CHASSIS, REALTIME DAMPING (F45)	9366711	1	695.00	MODULE, ELEK SUSP CONT	4–E4,55
97–98	Y	12088567	1	16.45	RELAY, ROAD SENSING SUSP DPNR (GRAY) (4–WAY) (09.277) (AC–DELCO #15–8571)	2–G2,12
97–02	Y07 CHASSIS, REALTIME DAMPING (F45)	10267772	1	3.45	RETAINER, ELEC SUSP CONT MDL FIN CVR (14.640)	4–E4,54
98–01	Y67 CHASSIS, REALTIME DAMPING (F45)	10267772	1	3.45	RETAINER, ELEC SUSP CONT MDL FIN CVR (14.640)	4–E4,54
02	Y67 CHASSIS, REALTIME DAMPING (F45)	10267772	1	3.45	RETAINER, ELEC SUSP CONT MDL FIN CVR (14.640)	4–E4,54
97	Y CHASSIS REALTIME DAMPING (F45)	12135153	1	55.75	SWITCH, ELEK SUSP	4–G8,75
98	Y CHASSIS, REALTIME DAMPING (F45), ACTIVE BRAKE CTL (JL4)	12198725	1	55.75	SWITCH, ELEK SUSP	4–G8,75
98–99	Y07–67 CHASSIS, REALTIME DAMPING (F45), (EXC ACTIVE BRAKE CTL (JL4)	12135153	1	55.75	SWITCH, ELEK SUSP	4–G8,75
99–01	Y07–67 CHASSIS, REALTIME DAMPING (F45), ACTIVE BRAKE CTL (JL4)	12198725	1	55.75	SWITCH, ELEK SUSP	4–G8,75
00	Y07–67 CHASSIS, REALTIME DAMPING (F45), (C88), (EXC ACTIVE BRAKE CTL (JL4)	10440628	1	92.75	SWITCH, ELEK SUSP	4–G8,75
00–02	Y07–67 CHASSIS, REALTIME DAMPING (F45), ACTIVE BRAKE CTL (JL4), (C88)	10440630	1	92.75	SWITCH, ELEK SUSP	4–G8,75

cardiagn.com

7.450 BRACKET – BULB – CONNECTOR – COVER – KNOB – MODULE – RELAY – RETAINER – SWITCH, Electronic Control Suspension (Con't)

*EXPORT****************EXPORT****************EXPORT****************EXPORT****************EXPORT*

00	Y07–67 (EXC C88), CHASSIS, REALTIME DAMPING (F45), ACTIVE BRAKE CTL (JL4)	16081218	1	4.89	BULB, ELEK SUSP CONT IND LP (NEO WGE) (09.276) (AC–DELCO #16081218)	
00–02	Y07–67 (EXC C88), CHASSIS, REALTIME DAMPING (F45), ACTIVE BRAKE CTL (JL4)	12198657	1	8.90	KNOB, ELEK SUSP SW	
00–02	Y07–67 (EXC C88), CHASSIS, REALTIME DAMPING (F45), ACTIVE BRAKE CTL (JL4)	12198657	1	8.90	KNOB, ELEK SUSP SW	
98–99	Y07–67 CHASSIS, REALTIME DAMPING (F45), EUROPEAN PROVISIONS (VD1) (EXPORT)	9360571	1	695.00	MODULE, ELEK SUSP CONT (RTD MODULE/FAST SHOCK)	4–E4,55
00	Y07–67 (EXC C88), CHASSIS, REALTIME DAMPING (F45), ACTIVE BRAKE CTL (JL4)	12135153	1	55.75	SWITCH, ELEK SUSP	4–G8,75
00–02	Y07–67 (EXC C88), CHASSIS, REALTIME DAMPING (F45)	12198725	1	55.75	SWITCH, ELEK SUSP	4–G8,75

7.460 CONNECTOR, Air Suspension and Inflator Unit

01–02	Y 6–SPD M/TRANS (MM6), 4–SPD A/TRANS (M30)	12102747	1	21.73	CONNECTOR, SOL–S/ABS ELEK SUSP CONT ACTR (BLACK) (2–WAY F W/LEADS) (03.670) (AC–DELCO #PT374)	

7.475 BRACKET – CONNECTOR – SENSOR, Air Suspension Leveling Or Level Control

97–02	Y CHASSIS, REALTIME DAMPING (F45)	10291213	LH	3.40	BRACKET, ELEK SUSP FRT POSN SEN LEAD (BLACK)	4–E4,42
97–02	Y CHASSIS, REALTIME DAMPING (F45)	10291214	RH	3.40	BRACKET, ELEK SUSP FRT POSN SEN LEAD (BLACK)	4–E4,42
97–02	Y CHASSIS, REALTIME DAMPING (F45)	10289511	2	3.40	BRACKET, ELEK SUSP RR POSN SEN LEAD (QTY 1 LH SEN, QTY 1 RH SEN)	4–G8,7
98–99	Y	12117320	1	25.03	CONNECTOR, SEN–VEH YAW & LAT ACCLRM (3–WAY F) (W/LEADS) (02.530) (AC–DELCO #PT1490)	5–F10,29
97–02	Y CHASSIS, REALTIME DAMPING (F45)	22153635	LH	262.00	SENSOR, ELEK SUSP FRT POSN (W/FRT VERT ACCLRM)	4–E4,47
97–02	Y CHASSIS, REALTIME DAMPING (F45)	22153636	RH	262.00	SENSOR, ELEK SUSP FRT POSN (W/FRT VERT ACCLRM)	4–E4,47
97–02	Y CHASSIS, REALTIME DAMPING (F45)	22153637	LH	262.00	SENSOR, ELEK SUSP RR POSN (W/RR VERT ACCLRM)	4–G8,29
97–02	Y CHASSIS, REALTIME DAMPING (F45)	22153638	RH	262.00	SENSOR, ELEK SUSP RR POSN (W/RR VERT ACCLRM)	4–G8,29

cardiagn.com

7.477 LINK – STUD, Air Suspension Height Sensor

97–02	Y CHASSIS, REALTIME DAMPING (F45)	22153639	LH	9.50	LINK, ELEK SUSP FRT POSN SEN .	4–E4,46
97–02	Y CHASSIS, REALTIME DAMPING (F45)	22153640	RH	9.50	LINK. ELEK SUSP FRT POSN SEN .	4–E4,46
97–02	Y CHASSIS, REALTIME DAMPING (F45)	22154109	LH	19.10	LINK, ELEK SUSP RR POSN SEN	4–G8,28
97–02	Y CHASSIS, REALTIME DAMPING (F45)	22154110	RH	19.10	LINK, ELEK SUSP RR POSN SEN	4–G8,28
97–02	Y07–67 CHASSIS, REALTIME DAMPING (F45)	10271003	2	1.75	STUD, ELEK SUSP FRT POSN SEN LINK BALL	4–G8,27
97–02	Y CHASSIS, REALTIME DAMPING (F45)	10271003	2	1.75	STUD, ELEK SUSP RR POSN SEN LINK BALL (MATES TO RR UPR CONT ARM)	4–G8,27

7.503 SPRING, Rear Spring

97	Y SOFT RIDE SUSP (FE1) ...	22146323	1	541.00	SPRING, RR	4–G8,65
97	Y SPORT SUSP (FE3)	22146646	1	541.00	SPRING, RR	4–G8,65
98–02	Y 4–SPD A/TRANS (M30), SOFT RIDE SUSP (FE1)	22146323	1	541.00	SPRING, RR	4–G8,65
98–02	Y 4–SPD A/TRANS (M30), SPORT SUSP (FE3)	22146646	1	541.00	SPRING, RR	4–G8,65
98–02	Y 6–SPD M/TRANS (MM6), SOFT RIDE SUSP (FE1)	22179019	1	480.00	SPRING, RR	4–G8,65
98–00	Y 6–SPD M/TRANS (MM6), SPORT SUSP (FE3)	22179020	1	480.00	SPRING, RR	4–G8,65
01–02	Y07–67 6–SPD M/TRANS (MM6), SPORT SUSP (FE3)	22179020	1	480.00	SPRING, RR	4–G8,65
01–02	Y37 MANUAL 6 SPD O/D TRANS, TREMEC (M12), SPECIAL SUSP (FE4)	22188038	1	541.00	SPRING, RR	4–G8,65

7.518 BOLT, Rear Spring And Shock Absorber Anchor

97–02	Y	10408968	2	3.40	BOLT, RR SPR (POSN #1)	4–G8,62
99–02	Y	3545802	4	3.33	BOLT, RR SPR (POSN #2) (M10X12X31) (07.242)	4–G8,63

7.530 NUT, Rear Spring Eye

97–98	Y	10282253	2	3.33	NUT, RR SPR (M14X2.0 6H THD) (06.164)	
97–98	Y	11516382	2	*1.03	NUT, RR SPR (POSN #1) (M14X2X16 19.6) (HFH LK) (08.917)	
98	Y (2ND DES)	10408969	2	2.75	NUT, RR SPR (POSN #1) (DIA. IS 40.0MM) (FOR 1ST DES SEE 11516382)	
98	Y (1ST DES)	11516382	2	*1.03	NUT, RR SPR (POSN #1) (M14X2X16 19.6) (HFH LK) (08.917) (DIA. IS 30.0MM) (FOR 2ND DES SEE 10408969)	
99–02	Y	10408969	2	2.75	NUT, RR SPR (POSN #1)	

cardiagn.com

7.545 INSULATOR – RETAINER, Rear Spring

97–02	Y	10408967	4	7.00	INSULATOR, RR SPR (30MM LG) (WHEN USING IN PLACE OF INSULATOR WITH STFEL WASHER, REPLACE ATTACHING NUTS W/10408969 & REPLACE ATTACHING BOLT W/10408968) .	4–G8,61
97–02	Y	10280659	2	4.65	RETAINER, RR SPR INSL	4–G8,64
98–02	Y	10408970	2	3.40	RETAINER, RR SPR INSL (1.00MM THK X 10.0)	4–G8,59

7.800 ATTACHMENT KIT – BRACKET – FRAME, License Plate

97–02	Y	10288540	1	58.50	ATTACHMENT KIT, FRT LIC PLT MT TR CVR (PAINT TO MATCH)	4–G15,53
97	Y LIC PLT FRM (V49), (EXC EUROPEAN PROVISIONS (VD1) (EXPORT), VE1 (EXPORT)	10288541	1	9.60	FRAME, FRT LIC PLT	4–G15,62
98–02	Y LIC PLT FRM (V49)	10288541	1	9.60	FRAME, FRT LIC PLT	4–G15,62
97–02	Y (EXC EUROPEAN PROVISIONS (VD1) (EXPORT), VE1 (EXPORT)	5978054	1	22.45	FRAME, RR LIC PLT	4–G26,9
	*EXPORT**********EXPORT**********EXPORT**********EXPORT**********EXPORT*					
97–02	Y EUROPEAN PROVISIONS (VD1) (EXPORT)	10257158	1	20.00	BRACKET, RR LIC PLT (ECE EXP) .	4–G26,23
97–02	Y FRT LIC PLT MTG PKG (VL4) (EXPORT)	10288544	1	9.60	FRAME, FRT LIC PLT	4–G15,66

7.831 BAR – BOLT – FASCIA – NUT – PLATE – REINFORCEMENT – RETAINER – RIVET, Bumper/Fascia Face

97–02	Y	12533361	1	255.00	BAR, FRT BPR IMP	4–G4,29
97–02	Y	12533362	1	226.00	BAR, RR BPR IMP	4–G4,1
97	Y	11514139	4	*1.08	BOLT, FRT BPR FASCIA (M6X1X25) (08.900)	
97–00	Y	25631448	2	*.86	BOLT, FRT BPR FASCIA (TO ENGY ABS FOAM SCREW)	4–G15,51
97–98	Y	11514139	4	*1.08	BOLT, RR BPR FASCIA (TO UPR FASCIA TO RR QTR) (M6X1X25) (08.900)	
97–02	Y	11516965	6	*1.29	BOLT, RR BPR FASCIA (TO SEAL RING) (POSN #1) (08.906)	4–G26,7
97–02	Y	25631448	2	*.88	BOLT, RR BPR FASCIA (TO ENGY ABS FOAM SCREW)	4–G15,51
97–02	Y	10433080	1	422.00	FASCIA, FRT BPR (RIM) (PAINT TO MATCH)	4–G15,50
97–02	Y	10433081	1	444.00	FASCIA, RR BPR (PAINT TO MATCH)	4–G26,19
97–02	Y	10281487	4	*.69	NUT, FRT BPR FASCIA BRKT (BRKT TO BAR) (04.665)	4–G15,5
97–98	Y	10403392	2	3.45	PLATE, FRT BPR FASCIA BRKT STUD	4–G15,60
97–02	Y	10256969	LH	5.15	REINFORCEMENT, FRT BPR FASCIA (FASCIA TO FDR, FASCIA SI)	4–G15,40
97–02	Y	10256970	RH	5.15	REINFORCEMENT, FRT BPR FASCIA (FASCIA TO FDR, FASCIA SI)	4–G15,52
97–02	Y	10256973	1	24.60	RETAINER, FRT BPR FASCIA (TO BRKT)	4–G15,1

cardiagn.com

7.831 BAR – BOLT – FASCIA – NUT – PLATE – REINFORCEMENT – RETAINER – RIVET, Bumper/Fascia Face (Con't)

97	Y	14093088	6	*.61	RETAINER, FRT BPR FASCIA (TO 10256973 PUSH PIN) (08.153)	4–G15,39
01–02	Y	14093088	4	*.61	RETAINER, FRT BPR FASCIA (08.153)	4–G15,39
97–02	Y	5973400	4	*1.05	RETAINER, RR BPR FASCIA (PUSH IN) (TO IMPACT BAR) (22.5MM LG) (01.269)	4–G26,12
97–02	Y	10276529	2	3.45	RETAINER, RR BPR FASCIA LWR (FASCIA OTR TO QTR SI LWR)	4–G26,13
97–02	Y	10257149	LH	9.80	RETAINER, RR BPR FASCIA OTR (FASCIA TO QTR)	4–G26,17
97–02	Y	10257150	RH	9.80	RETAINER, RR BPR FASCIA OTR (FASCIA TO QTR)	4–G26,17
98–01	Y	10413379	6	3.33	RIVET, FRT BPR FASCIA REINF	

7.832 EMBLEM, Bumper/Fascia

97–02	Y	10258164	1	30.50	EMBLEM, FRT BPR FASCIA	4–G15,55

7.833 BRACE – DEFLECTOR – NUT – PANEL – RETAINER – SPRING, Bumper/Fascia

97–02	Y	10298293	2	10.20	BRACE, FRT A/DFL	4–G15,68
97–00	Y (EXC FRT TOW HOOK (V76)	10283575	LH	8.75	DEFLECTOR, F/END FASCIA	4–G15,36
97–00	Y (EXC FRT TOW HOOK (V76)	10283576	RH	8.75	DEFLECTOR, F/END FASCIA	4–G15,36
01–02	Y07–67 (EXC FRT TOW HOOK (V76)	10283575	LH	8.75	DEFLECTOR, F/END FASCIA	4–G15,36
01–02	Y07–67 (EXC FRT TOW HOOK (V76)	10283576	RH	8.75	DEFLECTOR, F/END FASCIA	4–G15,36
97–02	Y	10281487	2	*.69	NUT, FRT A/DFL (TO SKID BAR) (04.665)	4–G15,27
97–02	Y	10281487	2	*.69	NUT, FRT A/DFL BR (04.665)	4–G15,27
97–02	Y	10419312	LH	8.55	PANEL, FRT BPR OTR VAL	4–G15,57
97–02	Y	10419313	RH	8.55	PANEL, FRT BPR OTR VAL	4–G15,56
97–02	Y	10400760	4	4.55	RETAINER, FRT CTR A/DFL	4–G15,45
97	Y (2ND DES)	10401221	2	13.34	SPRING, FRT A/DFL (HOOK ON BOTH ENDS, FOR 1ST DES SEE 21030793)	4–G15,31
97	Y (1ST DES)	21030793	4	*1.03	SPRING, FRT A/DFL (HOOK ON ONE END, FOR 2ND DES SEE 10401221)	4–G15,31
98–02	Y	10401221	2	13.34	SPRING, FRT A/DFL	4–G15,31
	*EXPORT**********EXPORT**********EXPORT**********EXPORT**********EXPORT*					
97–00	Y FRT TOW HOOK (V76)	10290249	RH	8.75	DEFLECTOR, F/END FASCIA	4–G15,36
97–00	Y FRT TOW HOOK (V76)	10291801	LH	8.75	DEFLECTOR, F/END FASCIA	4–G15,36
01–02	Y07–67 FRT TOW HOOK (V76)	10290249	RH	8.75	DEFLECTOR, F/END FASCIA	4–G15,36
01–02	Y07–67 FRT TOW HOOK (V76)	10291801	LH	8.75	DEFLECTOR, F/END FASCIA	4–G15,36

7.836 NUT – PLATE, Bumper/Fascia

97–02	Y	10281493	4	*1.00	NUT, FRT BPR IMP BAR SKID PLT (03.015)	4–G15,21
97–02	Y	10400765	1	201.00	PLATE, FRT BPR IMP BAR SKID (MAY NEED NUT 10281493 AND BOLT 11515919)	4–G4,31

cardiagn.com

7.840 ABSORBER – NUT – SPACER, Bumper/Fascia Energy Absorber

97–02	Y	10403040	1	148.00	ABSORBER, FRT BPR FASCIA ENGY (POLYPROPYLENE FOAM) (AC–DELCO #10403040)	4–G15,32
97–02	Y	10230344	1	135.00	ABSORBER, RR BPR FASCIA ENGY (POLYPROPYLENE FOAM) (AC–DELCO #10230344)	4–G26,4
97–98	Y	10281487	3	*.69	NUT, FRT BPR ENGY ABS (TO IMPACT BAR) (04.665)	4–G15,30
99–02	Y	10281487	1	*.69	NUT, FRT BPR ENGY ABS (TO IMPACT BAR) (04.665)	4–G15,30
97–02	Y	10281487	3	*.69	NUT, RR BPR ENGY ABS (TO IMPACT BAR) (04.665)	4–G15,30
97–98	Y	10277215	3	3.33	SPACER, FRT BPR FASCIA ENGY ABS (ENERGY ABS TO IMP BAR)	4–G15,33
99–02	Y	10277215	1	3.33	SPACER, FRT BPR FASCIA ENGY ABS (ENERGY ABS TO IMP BAR)	4–G15,33
97–02	Y	10277215	3	3.33	SPACER, RR BPR FASCIA ENGY ABS (ENERGY ABS TO IMP BAR)	4–G15,33

7.869 BRACKET, Bumper/Fascia Mounting

97–02	Y	10256972	1	17.40	BRACKET, FRT BPR FASCIA (STL HOLDS FASCIA TO BPR BEAM)	4–G15,2

7.874 BRACKET – NUT, Bumper/Fascia Mounting

97–02	Y	10256972	1	17.40	BRACKET, FRT BPR FASCIA (STL HOLDS FASCIA TO BPR BEAM) (07.869)	4–G15,2
97	Y	11513599	6	3.48	NUT, FRT BPR FASCIA (POSN #2) (TO W/H) (M4.2X1.41TAP) (U TYPE) (PZOR) (08.921) (AC–DELCO #11513599)	
98–99	Y	15962109	6	3.33	NUT, FRT BPR FASCIA (TO W/HOUSE, POS#2) (M4.2 X 1.4 PRE TOR) (U–NUT) (08.131)	

cardiagn.com

8.000 HOOD, Panel

97–02	Y	10246445	1	703.00	HOOD, (TRADITIONAL HD & FRT HGED)	4–H4,1

8.010 SEAL, Hood Panel

97–02	Y	10270455	1	26.50	SEAL, HOOD RR (EPDM EXTRUSION, RR)	4–H4,60
97–02	Y	10270456	1	26.50	SEAL, HOOD RR (EPDM EXTRUSION, BARRIER SEAL)	2–G10,18
97–02	Y	10404247	2	22.15	SEAL, HOOD RR (HOOD SIDE TO FENDER)	4–H4,45

8.015 HINGE – PLATE – RIVET – STRUT – STUD, Hood Panel

97–02	Y	10425969	LH	51.00	HINGE, HOOD (4 BAR LINK STEEL)	4–H4,36
97–02	Y	10425970	RH	51.00	HINGE, HOOD (4 BAR LINK STEEL)	4–H4,36
97–02	Y	10401746	LH	6.40	PLATE, HOOD HGE MT	4–G4,28
97–02	Y	10401747	RH	6.40	PLATE, HOOD HGE MT	4–G4,32
97–02	Y	27000893	2	3.33	RIVET, HOOD HGE ANC PLT	4–G4,56
97–02	Y	10274108	2	25.50	STRUT, HOOD (TRAD HD–FRT HGE)	4–H4,38
97–99	YY	88947690	1	35.50	STRUT, HOOD (AC–DELCO #510–379)	4–H4,38
97–01	Y	10285821	2	7.19	STUD, HOOD STRUT BALL	4–H4,39

8.021 INSULATOR, Hood Panel

97–98	Y	10285631	1	88.00	INSULATOR, HOOD	4–H4,13
99–00	Y07–67	10285631	1	88.00	INSULATOR, HOOD	4–H4,13
99–00	Y37 LP GRP (TR9)	10285631	1	88.00	INSULATOR, HOOD	4–H4,13
99–00	Y37 (EXC LP GRP (TR9)	10401057	1	88.00	INSULATOR, HOOD	4–H9,13
01–02	Y	10285631	1	88.00	INSULATOR, HOOD	4–H4,13

8.024 BRACKET – BUMPER – SPACER – STOP – STUD, Hood Panel Closing

97–02	Y	10277923	LH	8.15	BRACKET, HOOD STOP	4–H4,32
97–02	Y	10277924	RH	8.15	BRACKET, HOOD STOP	4–H4,32
97–00	Y	14069250	2	*2.94	BUMPER, HOOD ADJ FRT	4–H4,28
97	Y	10296641	2	8.58	BUMPER, HOOD HGE ADJ	4–H4,33
98–02	Y	10416094	2	6.93	BUMPER, HOOD HGE ADJ	4–H4,33
97–02	Y	12337963	2	3.33	BUMPER, HOOD SI (12.2MM) (12.212)	4–H4,12
97–02	Y	10292119	AR	3.33	SPACER, HOOD STOP BRKT (.5MM THICK)	4–H4,31
97–02	Y	10292120	AR	3.33	SPACER, HOOD STOP BRKT (1MM THICK)	4–H4,31
97–02	Y	10292121	AR	3.33	SPACER, HOOD STOP BRKT (2MM THICK)	4–H4,31
97–02	Y	10408730	LH	15.60	STOP, HOOD	4–H4,30
97–02	Y	10408731	RH	15.85	STOP, HOOD	4–H4,30
97–00	Y	25526456	2	3.33	STUD, HOOD ADJ FRT BPR (25MM O.D.) (INCLS NUT)	4–H4,28

8.055 STRIPE, Hood Panel Ornamentation

98	Y67 INDY PACE CAR (Z4Z)	10405304	LH	132.00	STRIPE, HOOD CTR	6–C10,11
98	Y67 INDY PACE CAR (Z4Z)	10405305	RH	132.00	STRIPE, HOOD CTR	6–C10,13

© 2001 GENERAL MOTORS SERVICE PARTS OPERATIONS–CHEVROLET–15Y

cardiagn.com

8.075 BOLT – CABLE – CLIP, Hood Latch

99	Y	22536178	3	3.50	BOLT, HOOD PRIM LAT REL CBL (04.592)	
97–02	Y	10411704	1	50.25	CABLE, HOOD PRIM LAT REL	4–H4,20
97–98	Y	10223661	1	3.33	CLIP, HOOD PRIM LAT REL CBL (TO W/H) (USE W/NYL STEEL HARN) (08.077)	4–H4,22
99–02	Y	12160858	1	3.33	CLIP, HOOD PRIM LAT REL CBL (TO W/H) (X–MAS TREE PUSH IN TYPE) (02.343)	4–H9,22

8.077 BRACKET – CONNECTOR, Hood Latch Release Cable

97–02	Y	12102747	1	21.73	CONNECTOR, SW–HOOD AJAR IND (BLACK) (2–WAY F W/LEADS) (03.670) (AC–DELCO #PT374)	2–F15,13
*EXPORT***	*EXPORT***	*EXPORT***	*EXPORT***	*EXPORT***	*EXPORT***	*EXPORT*
97–02	Y EUROPEAN PROVISIONS (VD1) (EXPORT)	10285408	1	4.55	BRACKET, HOOD AJAR IND LP SW	2–F15,12

8.080 BOLT – LATCH – RIVET – STRIKER, Hood Latch

97–02	Y	10287379	6	3.33	BOLT, HOOD PRIM LAT	4–H4,26
97–02	Y	10445406	LH	20.30	LATCH, HOOD PRIM	4–H4,27
97–02	Y	10445407	RH	20.25	LATCH, HOOD PRIM	4–H4,27
99–01	Y	15684901	8	.70	RIVET, HOOD PRIM LAT MT PNL PLT	
97–02	Y	10273708	2	10.55	STRIKER, HOOD PRIM LAT (TRAD HD–FRT HGE)	4–H4,16

8.130 FENDER, Front Fender

97–02	Y	10288100	LH	264.00	FENDER, FRT (TRADITIONAL HD–FRT & RR HGE)	4–H4,50
97–02	Y	10288101	RH	264.00	FENDER, FRT (TRADITIONAL HD–FRT & RR HGE)	4–H4,50

8.131 NUT, Front Fender Panel

97	Y	10277883	2	3.33	NUT, F/FDR (POS#3) (12.942)	

8.132 MOLDING – STRIPE, Front Fender and Body Ornamentation

97–02	Y BODY SI MLDG (B84)	10427434	RH	19.65	MOLDING, F/FDR CTR RR	6–C4,4
97–02	Y BODY SI MLDG (B84)	10427435	LH		MOLDING, F/FDR CTR RR	6–C4,4
98	Y67 INDY PACE CAR (Z4Z)	10405306	LH	116.00	STRIPE, BODY SI FRT	6–C10,7
98	Y67 INDY PACE CAR (Z4Z)	10405307	RH	116.00	STRIPE, BODY SI FRT	6–C10,7

8.141 REINFORCEMENT – RETAINER, Front Fender

97–02	Y	10276555	LH	9.00	REINFORCEMENT, F/FDR FRT (FASCIA TO FDR, FDR SI)	4–H4,47
97–02	Y	10276556	RH	9.00	REINFORCEMENT, F/FDR FRT (FASCIA TO FDR, FDR SI)	4–H4,47
98–02	Y	10412533	2	3.45	RETAINER, F/FDR UPR (TO DR EDGE)	4–H4,61

8.147 DECAL – EMBLEM, Front Fender Name

98	Y67 INDY PACE CAR (Z4Z)	10412667	2	31.25	DECAL, F/FDR RR (PACE CAR) (08.141)	6–C10,8
01–02	Y37	10429629	2	15.05	EMBLEM, F/FDR (Z06)	6–C8,12
02	YY37	10314089	2	21.65	EMBLEM, F/FDR (405 HP)	6–C8,12

cardiagn.com

8.153 NUT – PANEL – PANEL KIT – RETAINER, Front Fender Inner Wheel House

97–99	Y	25602015	1	*1.00	NUT, FRT W/H FIL PNL (M6X1, 16.5X25.5) (W/WIRE PROTECTOR) (14.865)	4–G15,11
97–02	Y	12455607	LH	16.10	PANEL KIT, FRT W/H	4–H4,51
97–01	Y	12455608	RH	16.10	PANEL KIT, FRT W/H	4–H4,51
97–02	Y	10289551	LH	37.50	PANEL, F/FDR INR LWR RR	4–H4,59
97–02	Y	10289552	RH	37.50	PANEL, F/FDR INR LWR RR	4–H4,59
97–01	Y	10407333	LH	267.00	PANEL, FRT W/H	4–H4,43
97–01	Y	10407334	RH	267.00	PANEL, FRT W/H	4–H4,43
02	Y	10319785	LH		PANEL, FRT W/H	4–H9,43
02	Y	10319786	RH		PANEL, FRT W/H	4–H9,43
99–02	Y	14045480	1	*1.40	RETAINER, FRT W/H FIL PNL (07.833)	

8.155 BRACKET – PLATE, Fender Wheelhouse

97–02	Y	10409585	1	3.95	BRACKET, FRT W/H PNL	4–H4,24
97–02	Y	10404603	2	1.70	PLATE, FRT W/H PNL BRKT STUD (04.785)	5–D4,31

8.808 FLASHLIGHT – LABEL – TAG, Emission, Cautionary and Informative

00	Y	10444228	1		FLASHLIGHT, INFO KIT	
01–02	YY07–67	10444228	1		FLASHLIGHT, INFO KIT	
02	Y ARABIC LANGUAGE LABEL (VBX)	15053409	1	9.25	LABEL, A/C REFRIG & BAT & FAN BLADE & RAD FIL CAP CAUTION	
01–02	Y07–67 ARABIC LANGUAGE LABEL (VBX)	15746390	1	9.25	LABEL, BAT CAUTION	2–G10,4
97–98	Y F/SEAT INFL RST SYS (AK5), MAN RST SYS (AX4) (EXPORT)	10426427	1	9.25	LABEL, CHILD ST LOCATION	4–H14,10
97	Y	12556699	1	N.L.	LABEL, DRIVETRAIN REMOVAL NTC	3–J21,11
98–99	Y 6–SPD M/TRANS (MM6)	12556699	1	N.L.	LABEL, DRIVETRAIN REMOVAL NTC	3–J21,11
00	Y 6–SPD M/TRANS (MM6), 4–SPD A/TRANS (M30)	12556699	1	N.L.	LABEL, DRIVETRAIN REMOVAL NTC	3–J21,11
01–02	Y 6–SPD M/TRANS (MM6), MANUAL 6 SPD O/D TRANS, TREMEC (M12), 4–SPD A/TRANS (M30)	12556699	1	N.L.	LABEL, DRIVETRAIN REMOVAL NTC	3–J21,11
97–98	Y	10292511	1	9.25	LABEL, FAN BLADE & INFL RST & ENG CLG & A/C REFRIG CAUTION	4–H14,15
99	Y (1ST DES)	10292511	1	9.25	LABEL, FAN BLADE & INFL RST & ENG CLG & A/C REFRIG CAUTION (1ST DES VEH W/ EVAP TUBE ORIFICE ON RR TUBE; 2ND DES SEE 10432250)	4–H14,15
99	Y (2ND DES)	10432250	1	9.25	LABEL, FAN BLADE & INFL RST & ENG CLG & A/C REFRIG CAUTION (2ND DES VEH W/ EVAP TUBE ORIFICE ON FRT TUBE;1ST DES SEE 10292511)	4–H18,14
00	Y	10432250	1	9.25	LABEL, FAN BLADE & INFL RST & ENG CLG & A/C REFRIG CAUTION (EVAP TUBE ORIFICE ON FRT TUBE)	4–H18,14

© 2001 GENERAL MOTORS SERVICE PARTS OPERATIONS–CHEVROLET–15Y

cardiagn.com

8.808 FLASHLIGHT – LABEL – TAG, Emission, Cautionary and Informative (Con't)

01-02	Y	10308343	1	9.25	LABEL, FAN BLADE & INFL RST & ENG CLG & A/C REFRIG CAUTION (EVAP TUBE ORIFICE ON FRT TUBE)	4-H18,14
97-02	Y	10299631	1	9.25	LABEL, I/P PASS KNEE BOLS PNL IDENT	4-H14,14
97	Y	15001737	2	9.25	LABEL, INFL RST SYS CAUTION (140.0X40.0)	4-H14,1
98-00	Y07-67 CANADIAN (Z49)	10408963	2	9.25	LABEL, INFL RST SYS CAUTION (130.0X65.0)	4-H16,1
98-99	Y07-67 (EXC CANADIAN (Z49)	15001737	2	9.25	LABEL, INFL RST SYS CAUTION (140.0X40.0)	4-H14,1
99-00	Y37 CANADIAN (Z49)	10408963	2	9.25	LABEL, INFL RST SYS CAUTION (130.0X65.0)	4-H16,1
99	Y37 (EXC CANADIAN (Z49)	15001737	2	9.25	LABEL, INFL RST SYS CAUTION (140.0X40.0)	4-H14,1
00-02	Y (C88), (EXC CANADIAN (Z49)	15002610	2	9.25	LABEL, INFL RST SYS CAUTION	4-H18,1
98	Y F/SEAT INFL RST SYS (AK5)	15012285	1	9.25	LABEL, INFL RST SYS INFO (NEXT GENERATION AIR BAG)	
97-02	Y F/SEAT INFL RST SYS (AK5)	26017956	1	9.25	LABEL, INFL RST SYS SERV NTC	4-H14,17
00-02	Y	15766394	1	9.25	LABEL, MERCURY DISPOSAL NTC	
97-02	Y	10443718	AR	9.25	LABEL, ODOM SERV NTC (ENGLISH AND FRENCH)	4-H14,6
01-02	YY37	9594076	1	9.25	LABEL, TIRE MAX SPD CAUTION	3-J24,7
97	Y 5.7G (LS1), FED EMIS SYS (NF2), (EXC POWERTRAIN CONT MODULE (K29), LEADED FUEL EMIS EXPORT (NM8), CANADIAN (Z49)	12558627	1	9.25	LABEL, VEH EMIS CONT INFO (AKB)	4-H14,13
97	Y 5.7G (LS1), CALIF EMIS, TIER 1 (NB6)	12558628	1	9.25	LABEL, VEH EMIS CONT INFO (AKC)	4-H14,13
97	Y 5.7G (LS1), FED EMIS SYS (NF2), CANADIAN (Z49), (EXC LEADED FUEL EMIS EXPORT (NM8)	12558629	1	9.25	LABEL, VEH EMIS CONT INFO (AKD)	4-H14,13
98	Y 5.7G (LS1), FED EMIS SYS (NF2), (EXC LEADED FUEL EMIS EXPORT (NM8), EMIS OVERRIDE (NN5), POWERTRAIN CONT MODULE (K29)	12559752	1	9.25	LABEL, VEH EMIS CONT INFO (FJU)	4-H16,12
99	Y 5.7G (LS1), FED EMIS SYS (NF2), (EXC POWERTRAIN CONT MODULE (K29)	12560553	1	9.25	LABEL, VEH EMIS CONT INFO (LAC)	4-H18,12
99	Y 5.7G (LS1), CALIF EMIS, TIER 1 (NB6), (EXC POWERTRAIN CONT MODULE (K29), CANADIAN (Z49)	12560554	1	9.25	LABEL, VEH EMIS CONT INFO (LAD)	4-H18,12
00	Y 5.7G (LS1), FED EMIS SYS (NF2), (EXC POWERTRAIN CONT MODULE (K29)	12562425	1	9.25	LABEL, VEH EMIS CONT INFO (PAY)	4-H18,12
00	Y 5.7G (LS1), CALIF EMIS LEV (NC1), (EXC POWERTRAIN CONT MODULE (K29)	12562426	1	9.25	LABEL, VEH EMIS CONT INFO (PAZ)	4-H18,12

cardiagn.com

8.808 FLASHLIGHT – LABEL – TAG, Emission, Cautionary and Informative (Con't)

01	Y 5.7G (LS1)	12564047	1	8.75	LABEL, VEH EMIS CONT INFO (NYB)	4–H18,12
01	Y 5.7S (LS6)	12572217	1	9.25	LABEL, VEH EMIS CONT INFO (NYC)	4–H18,12
02	Y 5.7G (LS1)	12565747	1	9.25	LABEL, VEH EMIS CONT INFO (CYA)	4–H18,12
02	Y 5.7S (LS6)	12570324	1	9.25	LABEL, VEH EMIS CONT INFO (CYB)	4–H18,12
97–00	Y	15002618	1	9.55	TAG, INFL RST I/P MDL CAUTION	5–F6,40
01–02	Y	10447122	1	9.55	TAG, INFL RST I/P MDL CAUTION	5–G2,40
	*EXPORT*********EXPORT*********EXPORT*********EXPORT*********EXPORT*					
99–00	Y F/SEAT INFL RST SYS (AK5), MAN RST SYS (AX4) (EXPORT)	10426427	1	9.25	LABEL, CHILD ST LOCATION	4–H14,10
01–02	Y F/SEAT INFL RST SYS (AK5), LABEL CHILD SEAT LOCATION (VJ4) (EXPORT)	10426427	1	9.25	LABEL, CHILD ST LOCATION	4–H14,10
00–02	Y07–67 (EXC C88)	15001737	2	9.25	LABEL, INFL RST SYS CAUTION (140.0X40.0)	4–H14,1
01–02	Y07–67 ARABIC LANGUAGE LABEL (VBX)	15749556	2	9.25	LABEL, INFL RST SYS CAUTION (ARABIC)	4–H18,1
98	Y 5.7G (LS1), EMIS OVERRIDE (NN5), (EXC POWERTRAIN CONT MODULE (K29), LEADED FUEL EMIS EXPORT (NM8), CANADIAN (Z49)	12560250	1	9.25	LABEL, VEH EMIS CONT INFO (FNS)	4–H16,12

8.845 SEAL KIT, Heater

97–02	Y	52478817	1	12.00	SEAL KIT, HTR (NEEDED WHEN SERVICING HEATER CORE)	4–I4,2

8.846 CLAMP – CLIP – HOSE – PIPE, Heater

97–02	Y	52469881	1	3.50	CLAMP, HTR CORE TUBE	4–I4,33
97–02	Y	15727547	1	12.40	CLIP, HTR INL & OTLT PIPE	4–H21,7
97–02	Y	10407026	1	29.20	HOSE, HTR INL (W/O VLV)	4–H21,10
97–02	Y	10272937	1	26.40	PIPE, HTR INL & OTLT	4–H21,8

8.849 SWITCH, Heater Control

97–99	Y A/C MAN CONT (C60)	16203780	1	17.85	SWITCH, HTR & A/C CONT BLO (08.852) (AC–DELCO #15–5691)	4–J2,24

8.854 CASE – CLAMP – CORE – COVER – SEAL, Heater Core

97–02	Y	52481842	1	23.09	CASE, BLO LWR	4–I4,15
97–98	Y	52478936	1	21.55	CASE, BLO UPR	4–I4,10
99–02	Y	52481841	1	23.09	CASE, BLO UPR	4–I4,10
97–02	Y	52469880	1	3.50	CLAMP, HTR CORE	4–I4,29
97–02	Y	52481854	1	151.00	CORE, HTR (AC–DELCO #15–60078)	4–I4,30
97–02	Y	52469864	1	12.40	COVER, HTR CORE (09.211)	4–I4,24
97–02	Y	2724952	1	5.97	SEAL, HTR CORE TUBE (5/8") (CONTAINS 2 SEALS 5/8") (09.222) (AC–DELCO #15–30917)	4–H21,4

© 2001 GENERAL MOTORS SERVICE PARTS OPERATIONS–CHEVROLET–15Y

cardiagn.com

8.854 CASE – CLAMP – CORE – COVER – SEAL, Heater Core (Con't)

99	Y	2724966	1	5.97	SEAL, HTR CORE TUBE (3/4") (25MM OD X 17MM ID) (CONTAINS 2 METAL/RUBB"O" RINGS) (09.222) (AC–DELCO #15–31101)	4–H21,4
00	Y (2ND DES)	2724966	1	5.97	SEAL, HTR CORE TUBE (3/4") (25MM OD X 17MM ID) (CONTAINS 2 METAL/RUBB"O" RINGS) (09.222) (POA 10441063, FOR 1ST DES SEE 52454646) (AC–DELCO #15–31101)	4–H21,4
00	Y (1ST DES)	52454646	1	*.90	SEAL, HTR CORE TUBE (BLACK) (RUBBER) (CAPTURED O–RING) (08.927) (POA 10419475, FOR 2ND DES SEE 2724966) (AC–DELCO #15–3985)	4–H21,4

8.855 CONNECTOR – MOTOR – RELAY – RESISTOR, Heater Blower Motor

NOTE: FOR ADDITIONAL INFORMATION, SEE BLOWER MOTOR AND IMPELLER APPLICATION CHARTS IN THE REFERENCE CATALOG (CODE 88R).

98–02	Y	12110541	1	1.12	CONNECTOR, RLY- BLO MOT (BLACK) (6–WAY F) (W/O LEADS) (03.900)	4–I8,19
97–99	Y A/C MAN CONT (C60)	52489327	1	114.00	MOTOR, BLO (W/IMPLR) (09.215) (AC–DELCO #15–8955)	4–I8,19
97–99	Y A/C FRT AUTO/AUX CONT (CJ2)	52489328	1	114.00	MOTOR, BLO (W/IMPLR) (09.215) (AC–DELCO #15–8956)	4–I4,20
00–02	Y A/C MAN CONT (C60)	52487083	1	127.00	MOTOR, BLO (W/IMPLR) (AC–DELCO #15–8880)	4–I8,19
00	Y A/C FRT AUTO/AUX CONT (CJ2), (2ND DES)	52487088	1	113.00	MOTOR, BLO (W/IMPLR) (IS I.D. BY ASM 52487086 LABELED ON MTR. FOR 1ST DES SEE 52481313) (AC–DELCO #15–8940)	4–I4,20
00	Y A/C FRT AUTO/AUX CONT (CJ2), (1ST DES)	52489328	1	114.00	MOTOR, BLO (W/IMPLR) (09.215) (IS I.D. BY ASM 52481316 LABELED ON MTR, FOR 2ND DES SEE 52487088) (AC–DELCO #15–8956)	4–I4,20
01–02	Y A/C FRT AUTO/AUX CONT (CJ2)	52487088	1	113.00	MOTOR, BLO (W/IMPLR) (AC–DELCO #15–8940)	4–I4,20
98–99	Y	12177233	1	23.80	RELAY, BLO MOT (5–TERMINAL) (09.277) (AC–DELCO #15–8721)	
00	Y 6–SPD M/TRANS (MM6), 4–SPD A/TRANS (M30), A/C MAN CONT (C60)	12177233	1	23.80	RELAY, BLO MOT (5–TERMINAL) (09.277) (AC–DELCO #15–8721)	
97–02	Y A/C MAN CONT (C60)	15304891	1	24.86	RESISTOR, BLO MOT (09.215) (AC–DELCO #15–8713)	4–I8,16

8.858 VALVE, Temperature Control

97–02	Y A/C MAN CONT (C60)	52469884	1	15.62	VALVE, TEMP (AC–DELCO #15–5582)	4–I8,46
97–98	Y	52469885	1	5.97	VALVE, TEMP (09.280) (AC–DELCO #15–5580)	4–I4,3
97–01	Y A/C FRT AUTO/AUX CONT (CJ2)	52481850	1	18.45	VALVE, TEMP (INCLS LH & RH VALVE) (09.786) (AC–DELCO #15–5680)	4–I4,3
01–02	Y A/C FRT AUTO/AUX CONT (CJ2)	52494493	1		VALVE, TEMP (AC–DELCO #15–5875)	4–I4,3

© 2001 GENERAL MOTORS SERVICE PARTS OPERATIONS–CHEVROLET–15Y

cardiagn.com

8.859 TUBE, Heater Motor Cooling

97–99	Y A/C MAN CONT (C60)	3035192	1	6.80	TUBE, BLO MOT CLG (09.218) ..	4–I4,18
97–02	Y A/C FRT AUTO/AUX CONT (CJ2)	3035192	1	6.80	TUBE, BLO MOT CLG (09.218) ..	4–I4,18
00–02	Y A/C MAN CONT (C60)	52487082	1	3.50	TUBE, BLO MOT CLG (09.218) ..	4–I8,17

8.890 CONNECTOR – HARNESS – LAMP, Underhood

97–98	Y	12101899	1	18.52	CONNECTOR, LP–U/HOOD (BLACK) (2–WAY F W/LEADS) (02.383) (AC–DELCO #PT169)	4–H4,11
97–00	Y	12162000	1	.58	CONNECTOR, LP–U/HOOD (BLACK) (2–WAY M) (W/O LEADS) (02.530)	5–I4,2
97–00	Y	12167120	1	24.44	CONNECTOR, LP–U/HOOD (BLACK) (2–WAY M) (W/LEADS) (04.720) (AC–DELCO #PT786)	5–I4,2
99–02	Y	12101899	1	18.52	CONNECTOR, LP–U/HOOD (BLACK) (2–WAY F W/LEADS) (02.383) (AC–DELCO #PT169)	4–H4,11
97–98	Y	12163775	1	15.40	HARNESS, U/HOOD LP WRG ...	4–H4,10
99–00	Y07–67	12163775	1	15.40	HARNESS, U/HOOD LP WRG ...	4–H4,10
99–00	Y37 LP GRP (TR9)	12163775	1	15.40	HARNESS, U/HOOD LP WRG ...	4–H4,10
01–02	Y	12163775	1	15.40	HARNESS, U/HOOD LP WRG ...	4–H4,10
97–99	Y	25536936	1	12.50	LAMP, U/HOOD	4–H4,7
00–02	Y	10303617	1	12.50	LAMP, U/HOOD	4–H9,7

cardiagn.com

9.170 COMPRESSOR – CONNECTOR – PLUG, A/C Compressor

97–01	Y	1137026	1	605.00	COMPRESSOR, A/C (V7 W/CLUTCH) (AC–DELCO #15–20729)	4–I12,1
02	Y	1137031	1		COMPRESSOR, A/C (V7 W/CLUTCH) (AC–DELCO #15–20746)	4–I12,1
97–02	Y	12102748	1	23.93	CONNECTOR, SEN–A/C REFRIG PRESS (BLACK) (3–WAY F) (W/LEADS) (02.535) (AC–DELCO #PT375)	
97–02	Y	6560692	1	5.97	PLUG, A/C CMPR OIL DRN (AC–DELCO #15–31017)	4–I12,13

9.171 BRACKET, A/C Compressor Mounting

97–02	Y	12556444	1	28.00	BRACKET, A/C CMPR	4–I14,1

9.172 SCREEN, A/C Compressor (Internal Parts)

97–01	Y	6559238	1	2.42	SCREEN, A/C CMPR SUC (AC–DELCO #15–2817)	4–I12,15

9.173 BOLT – STUD, A/C Compressor Mounting

97–02	Y	12552922	1	7.10	BOLT, A/C CMPR	4–I14,6
97–02	Y	12556447	1	4.63	STUD, A/C CMPR (09.171)	4–I14,2

9.175 SEAL KIT, A/C Compressor

97–02	Y	2724964	1	31.50	SEAL KIT, A/C CMPR SHF (AC–DELCO #15–31018)	4–I12,8

9.176 VALVE, A/C Compressor Control

97–02	Y	2724780	1	78.00	VALVE, A/C CMPR VAR DISPL CONT (AC–DELCO #15–5452)	4–I12,12

9.177 CAP – CORE – VALVE, A/C Compressor

97–02	Y	52458768	1	3.50	CAP, A/C REFRIG CHRG VLV (16.6MM I.S. DIA) (HIGH SIDE CHARGE PORT) (09.220)	4–I15,4
97–02	Y	52471377	1	*.73	CAP, A/C REFRIG CHRG VLV (8MM X 1.0) (LOW SIDE SERVICE PORT) (09.220)	4–I15,4
97–02	Y	10245620	1	5.97	CAP, A/C REFRIG SERV VLV FTG (W/SEAL) (AC–DELCO #15–30477)	4–I15,16
97–02	Y	3041827	1	5.97	CORE, A/C REFRIG SERV VLV (W/O O–RING) (AC–DELCO #15–1119)	4–I15,4
97–02	Y	3041827	1	5.97	VALVE, A/C REFRIG SERV (W/O O–RING) (AC–DELCO #15–1119)	4–I15,4

© 2001 GENERAL MOTORS SERVICE PARTS OPERATIONS–CHEVROLET–15Y

cardiagn.com

9.178 VALVE, A/C Compressor Pressure Relief

97–98	Y	6552743	1	22.75	VALVE, A/C CMPR PRESS RLF (W/O–RING) (W/ ENGLISH THREAD) (AC–DELCO #15–5415)	4–I12,17
99–02	Y	2724982	1	45.50	VALVE, A/C CMPR PRESS RLF (CONTAINS VALVE, O–RING, AND AN ADAPTER) (AC–DELCO #15–5711)	4–I12,17
97–02	Y	10245619	1	6.18	VALVE, A/C REFRIG HIGH PRESS SERV (AC–DELCO #15–5528)	4–I15,16
97–02	Y	3041827	1	5.97	VALVE, A/C REFRIG PRESS SEN (W/O O–RING) (09.177) (AC–DELCO #15–1119)	4–I15,15

9.180 PULLEY – TENSIONER, A/C Compressor Drive/Idler

97–01	Y	6580622	1	200.00	PULLEY, A/C CMPR (AC–DELCO #15–4686)	4–I12,6
97–98	Y 5.7G (LS1)	12557334	1	34.00	PULLEY, A/C CMPR BELT IDLER (AC–DELCO #15–4669)	1–L25,10
99–02	Y	12557334	1	34.00	PULLEY, A/C CMPR BELT IDLER (AC–DELCO #15–4669)	1–L25,10
97–02	Y	12560345	1	58.37	TENSIONER, A/C CMPR BELT	1–L25,12

9.181 BEARING – NUT – RING, A/C Compressor Pulley

97–02	Y	6559469	1	32.50	BEARING, A/C CMPR PUL (09.188) (AC–DELCO #15–2802)	4–I12,5
97–01	Y	6557414	1	5.32	NUT, A/C CLU (HEX LOCK, M9X1.25X6.14, SAE 1110, STL, ZP) (AC–DELCO #15–4263)	4–I12,2
97–02	Y	6557617	1	5.97	RING, A/C CMPR PUL BRG RET (AC–DELCO #15–2786)	4–I12,4

9.186 COIL – CONNECTOR, A/C Compressor Clutch Actuating

97–02	Y	6552423	1	65.00	COIL, A/C CLU (W/HSG) (MATES W/CONN 12101937) (AC–DELCO #15–4440)	4–I12,7
97–02	Y	12101937	1	19.34	CONNECTOR, COIL–A/C CLU (OVAL) (2–WAY F) (W/LEADS) (02.535) (AC–DELCO #PT209)	

9.188 CLUTCH – KEY, A/C Compressor Clutch

97–02	Y	6581515	1	58.50	CLUTCH, A/C (CLUTCH DRIVER) (09.180) (AC–DELCO #15–4685)	4–I12,3
97–01	Y	6557411	1	5.33	KEY, A/C CLU (AC–DELCO #15–4262)	4–I12,9

9.190 CONDENSER – INSULATOR, A/C Condenser

97–02	Y	52470569	1	311.00	CONDENSER, A/C (AC–DELCO #15–6931)	4–I15,11
97–02	Y	10296001	2	3.50	INSULATOR, A/C CNDSR	

cardiagn.com

9.195 ACCUMULATOR – INSULATOR, A/C Refrigerant

97–00	Y	2724934	1	64.76	ACCUMULATOR, A/C (AC–DELCO #15–1769)	4–I15,32
01–02	Y	1132765	1		ACCUMULATOR, A/C (AC–DELCO #15–10082)	4–I15,32
97–02	Y	10236219	1	3.50	INSULATOR, A/C ACCUM (SIDE) (POSN #1)	4–I15,31

9.196 BRACKET, A/C Refrigerant

97–02	Y	10229475	1	6.20	BRACKET, A/C ACCUM	4–I15,30

9.210 CONNECTOR – EVAPORATOR KIT – FILTER – RETAINER, A/C Evaporator

01	YY67 6–SPD M/TRANS (MM6), A/C FRT AUTO/AUX CONT (CJ2), TAIL & S/LP (T89) (EXPORT)	12125678	1	35.19	CONNECTOR, HTR & A/C EVAP & BLO MDL (6–WAY F, W/LEADS) (09.172) (AC–DELCO #PT590)	
01–02	YY67	12125678	1	35.19	CONNECTOR, HTR & A/C EVAP & BLO MDL (6–WAY F, W/LEADS) (09.172) (AC–DELCO #PT590)	
97–02	Y	52469295	1	238.00	EVAPORATOR KIT, A/C (AC–DELCO #15–6887)	4–I4,38
97–02	Y	52469891	1	5.60	FILTER, A/C EVPR AIR	4–I4,36
97–02	Y	3040933	6	3.50	RETAINER, A/C EVPR WAT FLTR (ROUND HEAD)	4–I4,35

9.211 BRACKET – HOUSING – SEAL KIT – STUD – TUBE, A/C Evaporator

97–02	Y	52470729	LH	4.87	BRACKET, HTR & A/C EVPR MDL UPR (09.280)	4–I4,6
97–02	Y	52470730	RH	4.87	BRACKET, HTR & A/C EVPR MDL UPR (09.280)	4–I4,9
97	Y	52485032	1	20.37	HOUSING, AIR INL (W/VLV & ACTUATOR)	4–I4,42
98	Y	52485032	1	20.37	HOUSING, AIR INL (W/VLV & ACTUATOR)	4–I4,42
97–02	Y	52478813	1	77.97	SEAL KIT, A/C EVPR (NEEDED WHEN SERVICING EVAP CORE)	4–I4,1
97–02	Y	52477012	2	3.50	STUD, HTR & A/C EVPR & BLO MDL	4–I4,7
97–02	Y	10268285	1	4.20	TUBE, A/C EVPR & BLO MDL DRN	4–H21,14

9.213 ORIFICE, A/C Expansion Refrigerant

97–98	Y	3033879	1	8.85	ORIFICE, A/C EVPR TUBE (W/GASKET) (AC–DELCO #15–5151)	4–I15,26
99	Y (1ST DES)	3033879	1	8.85	ORIFICE, A/C EVPR TUBE (W/GASKET) (ORIFACE IS PART OF REAR AC EVAP TUBE ASSMBLY, 2ND DES SEE PART 52477004) (AC–DELCO #15–5151)	4–I15,26
99	Y (2ND DES)	52477004	1	6.18	ORIFICE, A/C EVPR TUBE (ORIFACE IS PART OF FRONT AC EVAP TUBE ASSMBLY, 1ST DES SEE PART 03033897) (AC–DELCO #15–5612)	4–I15,26
00–02	Y	52477004	1	6.18	ORIFICE, A/C EVPR TUBE (AC–DELCO #15–5612)	4–I15,26

cardiagn.com

9.215 MOTOR – RESISTOR, A/C Evaporator Blower

NOTE: BLOWER MOTORS MAY BE REPLACED BY ONE THAT REQUIRES A PRESS–ON TYPE IMPELLER

NOTE: FOR ADDITIONAL INFORMATION, SEE BLOWER MOTOR AND IMPELLER APPLICATION CHARTS IN THE REFERENCE CATALOG (CODE 88R).

97–99	Y A/C MAN CONT (C60)	52489327	1	114.00	MOTOR, BLO (W/IMPLR) (AC–DELCO #15–8955)	4–I8,19
97–99	Y A/C FRT AUTO/AUX CONT (CJ2)	52489328	1	114.00	MOTOR, BLO (W/IMPLR) (AC–DELCO #15–8956)	4–I4,20
00–02	Y A/C MAN CONT (C60)	52487083	1	127.00	MOTOR, BLO (W/IMPLR) (08.855) (AC–DELCO #15–8880)	4–I8,19
00	Y A/C FRT AUTO/AUX CONT (CJ2), (2ND DES)	52487088	1	113.00	MOTOR, BLO (W/IMPLR) (08.855) (IS I.D. BY ASM 52487086 LABELED ON MTR, FOR 1ST DES SEE 52481313) (AC–DELCO #15–8940)	4–I4,20
00	Y A/C FRT AUTO/AUX CONT (CJ2), (1ST DES)	52489328	1	114.00	MOTOR, BLO (W/IMPLR) (IS I.D. BY ASM 52481316 LABELED ON MTR, FOR 2ND DES SEE 52487088) (AC–DELCO #15–8956)	4–I4,20
01–02	Y A/C FRT AUTO/AUX CONT (CJ2)	52487088	1	113.00	MOTOR, BLO (W/IMPLR) (08.855) (AC–DELCO #15–8940)	4–I4,20
97–02	Y A/C MAN CONT (C60)	15304891	1	24.86	RESISTOR, BLO MOT (AC–DELCO #15–8713)	4–I8,16

9.218 TUBE, A/C Blower Motor Cooling

97–99	Y A/C MAN CONT (C60)	3035192	1	6.80	TUBE, BLO MOT CLG	4–I4,18
97–02	Y A/C FRT AUTO/AUX CONT (CJ2)	3035192	1	6.80	TUBE, BLO MOT CLG	4–I4,18
00–02	Y A/C MAN CONT (C60)	52487082	1	3.50	TUBE, BLO MOT CLG	4–I8,17

9.220 TUBE, A/C Refrigerant (All Metal)

97–02	Y	10436322	1	23.45	TUBE, A/C EVPR (RR) (WHEN USING 10436322, EARLY 99 & PRIOR, (W/ORIFICE IN RR TUBE), IT IS NECESSARY TO REPLACE FRT & RR EVAP TUBES AS WELL AS FAN BLADE LABLE W/10432250) (AC–DELCO #15–31138)	4–I15,25
97–02	Y	10436323	1	38.00	TUBE, A/C EVPR (FRT) (TO CONDENSER) (WHEN USING 10436323, EARLY 99 & PRIOR, (W/ORIFICE IN RR TUBE), IT IS NECESSARY TO REPLACE FRT & RR EVAP TUBES AS WELL AS FAN BLADE LABLE W/10432250) (AC–DELCO #15–31139)	4–I15,17

9.222 SEAL – SEAL KIT, A/C Refrigerant Lines

NOTE: HOSE BLK SEAL WASHER KIT #2724575 SERVICES 1991 & PRIOR VEHICLES WITH NEW DESIGN COMPRESSOR (W/HOSE BLOCK CONNECTION)

97–02	Y	2724577	1	6.85	SEAL KIT, A/C CMPR & CNDSR HOSE MANIF (CONTAINS 2 SEALS 5/8") (AC–DELCO #15–2722)	4–I12,14
99–02	Y	2724577	2	6.85	SEAL, A/C CMPR & CNDSR HOSE (CONTAINS 2 SEALS 5/8") (AC–DELCO #15–2722)	4–I12,14

© 2001 GENERAL MOTORS SERVICE PARTS OPERATIONS–CHEVROLET–15Y

cardiagn.com

9.222 SEAL – SEAL KIT, A/C Refrigerant Lines (Con't)

00	Y (2ND DES)	2724966	1	5.97	SEAL, A/C CMPR & CNDSR HOSE (25MM OD X 17MM ID) (CONTAINS 2 METAL/RUBB"O" RINGS) (POA 10441063, FOR 1ST DES SEE 52454646) (AC–DELCO #15–31101)	
01	Y	2724966	1	5.97	SEAL, A/C CMPR & CNDSR HOSE (25MM OD X 17MM ID) (CONTAINS 2 METAL/RUBB"O" RINGS) (AC–DELCO #15–31101)	
97–01	Y	2724958	1	5.97	SEAL, A/C CMPR PRESS RLF VLV (O RING) (W/5 VALVE SEALS) (AC–DELCO #15–30992)	4–I12,16

9.225 HOSE, A/C Refrigerant (Metal and Rubber Sections)

97–02	Y	10229474	1	21.36	HOSE, A/C ACCUM (AC–DELCO #15–30852)	4–I15,23

9.226 HOSE ASM, A/C Compressor

97–02	Y	10229469	1	98.00	HOSE ASM, A/C CMPR & CNDSR (AC–DELCO #15–30851)	4–I15,5

9.242 BOLT, A/C Compressor

97–98	Y	25610436	1	3.33	BOLT, A/C EVPR & ACCUM HOSE (M8X1.25X35) (08.900)	

9.262 BOLT – DUCT – OUTLET – PLUG – SEAL, Air Distributor

97–02	Y	52466167	4	3.45	BOLT, FLR AIR OTLT DUCT (4.2X2.25X16) (09.786)	4–I8,2
97–02	Y	10282421	RH	9.20	DUCT, FLR AIR OTLT	4–I19,14
97–02	Y	10293194	LH	5.30	DUCT, FLR AIR OTLT	4–I19,32
97–02	Y	10283464	RH	9.20	DUCT, FLR AIR OTLT RR (RIGHT SIDE ONLY)	4–I19,19
97–02	Y	10282843	LH	9.20	DUCT, FLR RR AIR OTLT	4–I19,17
97–02	Y	10282844	RH	8.80	DUCT, FLR RR AIR OTLT	4–I19,18
97	Y07 SPEAKER SYSTEM 6 (UZ6)	10267874	LH	9.20	DUCT, FRT S/D AIR	7–E2,24
98	Y07–67 SPEAKER SYSTEM 6 (UZ6)	10267874	LH	9.20	DUCT, FRT S/D AIR	7–E2,24
99–02	Y SPEAKER SYSTEM 6 (UZ6)	10267874	LH	9.20	DUCT, FRT S/D AIR	7–E2,24
99–00	Y37 4 SPKR SYS (UQ5)	10267874	LH	9.20	DUCT, FRT S/D AIR	7–E2,24
97–00	Y (19I)	10403256	1	3.50	OUTLET, FLR AIR INR HALF (BLACK)	4–I19,20
97	Y (92I)	10403257	1	3.50	OUTLET, FLR AIR INR HALF (PEWTER)	4–I19,20
97–98	Y (94I)	10403258	1	3.50	OUTLET, FLR AIR INR HALF (RED) .	4–I19,20
98–02	Y07–67 (92I)	10403257	1	3.50	OUTLET, FLR AIR INR HALF (PEWTER)	4–I19,20
98–02	Y07–67 (67I)	10403259	1	3.50	OUTLET, FLR AIR INR HALF (CAMEL)	4–I19,20
99	Y07–67 (94I)	10403258	1	3.50	OUTLET, FLR AIR INR HALF (RED) .	4–I19,20
00–02	Y07–67 (70I)	10409411	1		OUTLET, FLR AIR INR HALF (RED) .	4–I19,20
01–02	Y07–67 (19I)	10403256	1	3.50	OUTLET, FLR AIR INR HALF (BLACK)	4–I19,20
01–02	Y37 (19I), (70I)	10403256	1	3.50	OUTLET, FLR AIR INR HALF (BLACK)	4–I19,20
97	Y (94I)	10403253	1	3.50	OUTLET, FLR AIR OTR HALF (RED)	4–I19,21

cardiagn.com

9.262 BOLT – DUCT – OUTLET – PLUG – SEAL, Air Distributor (Con't)

97–00	Y (19I)	10414489	1	3.50	OUTLET, FLR AIR OTR HALF (BLACK)	4–I19,21
97	Y (92I)	10414490	1	3.50	OUTLET, FLR AIR OTR HALF (SHALE/PEWTER)	4–I19,21
98–99	Y07–67 (94I)	10403253	1	3.50	OUTLET, FLR AIR OTR HALF (RED)	4–I19,21
98–02	Y07–67 (92I)	10414490	1	3.50	OUTLET, FLR AIR OTR HALF (SHALE/PEWTER)	4–I19,21
98–02	Y07–67 (67I)	10414492	1	3.50	OUTLET, FLR AIR OTR HALF (CAMEL)	4–I19,21
00–02	Y07–67 (70I)	10409412	1		OUTLET, FLR AIR OTR HALF (RED)	4–I19,21
01–02	Y07–67 (19I)	10414489	1	3.50	OUTLET, FLR AIR OTR HALF (BLACK)	4–I19,21
01–02	Y37 (19I), (70I)	10414489	1	3.50	OUTLET, FLR AIR OTR HALF (BLACK)	4–I19,21
97–99	Y SPEAKER SYSTEM 6 (UZ6)	10406518	LH	23.67	OUTLET, FRT S/D FRT AIR	7–E2,55
99–00	Y37 4 SPKR SYS (UQ5)	10406518	LH	23.67	OUTLET, FRT S/D FRT AIR	7–E2,55
00–02	Y	10406518	LH	23.67	OUTLET, FRT S/D FRT AIR	7–E2,55
97–02	Y	10406514	LH	24.47	OUTLET, I/P CTR AIR	5–F6,10
97	Y	10406515	RH	17.10	OUTLET, I/P CTR AIR	5–F6,9
97–02	Y	10406516	1	17.10	OUTLET, I/P CTR AIR (FAR RIGHT POSITION)	5–F6,7
98–02	Y	10406515	RH	17.10	OUTLET, I/P CTR AIR	5–F6,9
97–02	Y A/C MAN CONT (C60)	52474371	1	3.50	PLUG, HTR CASE	4–I8,8
97	Y07 SPEAKER SYSTEM 6 (UZ6)	10267885	LH	9.17	SEAL, FRT S/D AIR DUCT	7–E2,27
98	Y07–67 SPEAKER SYSTEM 6 (UZ6)	10267885	LH	9.17	SEAL, FRT S/D AIR DUCT	7–E2,27
99–02	Y SPEAKER SYSTEM 6 (UZ6)	10267885	LH	9.17	SEAL, FRT S/D AIR DUCT	7–E2,27
99–00	Y37 4 SPKR SYS (UQ5)	10267885	LH	9.17	SEAL, FRT S/D AIR DUCT	7–E2,27

9.273 CONTROL, Heater and A/C Control

97	Y A/C FRT AUTO/AUX CONT (CJ2)	9356081	1	886.00	CONTROL, HTR & A/C (AC–DELCO #15–72497)	4–I23,5
97–98	Y A/C MAN CONT (C60)	9366311	1	339.00	CONTROL, HTR & A/C (AC–DELCO #15–72537)	4–I23,11
97	Y A/C FRT AUTO/AUX CONT (CJ2)	16256018	1	212.00	CONTROL, HTR & A/C (REMAN) (AC–DELCO #15–72444)	4–J2,36
98	Y A/C FRT AUTO/AUX CONT (CJ2)	9352181	1	340.00	CONTROL, HTR & A/C (AC–DELCO #15–72499)	4–I23,5
99	Y A/C MAN CONT (C60), (1ST DES)	9366311	1	339.00	CONTROL, HTR & A/C (LABELED 9366311. FOR 2ND DES SEE 09370871) (AC–DELCO #15–72537)	4–I23,11
99	Y A/C MAN CONT (C60), (2ND DES)	9370871	1	339.00	CONTROL, HTR & A/C (LABELED 09370871. FOR 1ST DES SEE 09366311) (AC–DELCO #15–72546)	4–I23,11
99	Y A/C FRT AUTO/AUX CONT (CJ2)	16254311	1	339.00	CONTROL, HTR & A/C (AC–DELCO #15–72513)	4–I23,5
00	Y A/C MAN CONT (C60)	9380311	1	236.17	CONTROL, HTR & A/C (AC–DELCO #15–72591)	4–I23,11
00–02	Y A/C FRT AUTO/AUX CONT (CJ2)	10436062	1	339.00	CONTROL, HTR & A/C (AC–DELCO #15–72592)	4–I23,5
01–02	Y A/C MAN CONT (C60)	10447750	1	268.00	CONTROL, HTR & A/C (AC–DELCO #15–72690)	4–I23,11

cardiagn.com

9.275 ASPIRATOR – CONNECTOR – DUCT – MODULE – MUFFLER – SENSOR – SWITCH, A/C Electric Control

97–02	Y A/C FRT AUTO/AUX CONT (CJ2)	25649706	1	4.20	ASPIRATOR, I/S AIR TEMP SEN (W/O DUCT, CONNECTOR & MUFFLER)	4–I4,8
97–02	Y	15306069	1	32.91	CONNECTOR, MDL–BLO MOT CONT (4–WAY FEMALE M/P 280 (W/LEADS) .) (4–WAY F W/LEADS) (13.100) (AC–DELCO #PT1231)	4–I4,17
97–02	Y	15306189	1	42.09	CONNECTOR, MDL–BLO MOT CONT (BLACK) (8–WAY F W/LEADS, 7–12GA & 4–18GA AS REQ) (02.535) (AC–DELCO #PT1346)	4–I4,17
02	YY67 4–SPD A/TRANS (M30), A/C FRT AUTO/AUX CONT (CJ2), T&T WHL (N37), (EXC TAIL & S/LP (T89) (EXPORT)	15306069	1	32.91	CONNECTOR, MDL–BLO MOT CONT (4–WAY FEMALE M/P 280 (W/LEADS) .) (4–WAY F W/LEADS) (13.100) (AC–DELCO #PT1231)	4–I4,17
97–02	Y	12045470	1	3.33	CONNECTOR, MDL–HTR, A/C PROGMR (32–WAY FEMALE M/P 100. SHIPPED BULK FROM PACKARD.) (32–WAY F) (09.768)	4–I23,5
97–02	Y	12125635	1	35.97	CONNECTOR, MDL–HTR, A/C PROGMR (BLACK) (7–WAY F) (W/LEADS) (10.163) (AC–DELCO #PT547)	4–I8,16
97–02	Y	12125678	1	35.19	CONNECTOR, MDL–HTR, A/C PROGMR (6–WAY FEMALE M/P 3MM (W/LEADS)) (6–WAY F, W/LEADS) (09.172) (AC–DELCO #PT590)	4–I23,5
98–00	Y	15305936	1	59.67	CONNECTOR, MDL–HTR, A/C PROGMR (12–WAY F W/LEADS) (09.715) (AC–DELCO #PT1128) .	4–I23,5
01–02	YY67	15305996	1	59.67	CONNECTOR, MDL–HTR, A/C PROGMR (12–WAY FEMALE M/P 100 (W/LEADS) .) (12–WAY F W/LEADS) (09.715) (AC–DELCO #PT1128)	4–I23,5
02	YY67 4–SPD A/TRANS (M30), A/C FRT AUTO/AUX CONT (CJ2), T&T WHL (N37), (EXC TAIL & S/LP (T89) (EXPORT)	12045470	1	3.33	CONNECTOR, MDL–HTR, A/C PROGMR (32–WAY F) (09.768)	4–I23,5
97–02	Y	12085535	1	18.01	CONNECTOR, SEN–I/S AIR TEMP (2–WAY F W/LEADS W/INDEX TAB OTR EDGE OF CAVITY B) (02.535) (AC–DELCO #PT146)	5–F2,19
02	YY67 4–SPD A/TRANS (M30), A/C FRT AUTO/AUX CONT (CJ2), T&T WHL (N37), (EXC TAIL & S/LP (T89) (EXPORT)	12085535	1	18.01	CONNECTOR, SEN–I/S AIR TEMP (2–WAY F W/LEADS W/INDEX TAB OTR EDGE OF CAVITY B) (02.535) (AC–DELCO #PT146)	5–F2,19
97–02	Y	12085481	1	18.12	CONNECTOR, SEN–SUN LOAD TEMP (BLACK) (2–WAY M W/LEADS) (02.535) (AC–DELCO #PT103)	5–F2,1

© 2001 GENERAL MOTORS SERVICE PARTS OPERATIONS–CHEVROLET–15Y

cardiagn.com

9.275 ASPIRATOR – CONNECTOR – DUCT – MODULE – MUFFLER – SENSOR – SWITCH, A/C Electric Control (Con't)

02	YY67 4–SPD A/TRANS (M30), A/C FRT AUTO/AUX CONT (CJ2), T&T WHL (N37), (EXC TAIL & S/LP (T89) (EXPORT)	12085481	1	18.12	CONNECTOR, SEN–SUN LOAD TEMP (BLACK) (2–WAY M W/LEADS) (02.535) (AC–DELCO #PT103)	5–F2,1
97–99	Y	12117269	1	19.48	CONNECTOR, SW–HTR & A/C CONT SEL (3–WAY F) (W/LEADS) (10.150) (AC–DELCO #PT442)	4–I23,11
97–02	Y A/C FRT AUTO/AUX CONT (CJ2)	10229466	1	9.43	DUCT, I/S AIR TEMP SEN ASPIRATOR (FRT)	4–I19,35
97–01	Y A/C FRT AUTO/AUX CONT (CJ2)	10277871	1	9.02	DUCT, I/S AIR TEMP SEN ASPIRATOR (RR) (POSN #1) ..	4–I19,33
97–02	Y A/C FRT AUTO/AUX CONT (CJ2)	5247997	1	138.00	MODULE, BLO MOT CONT (AC–DELCO #15–8756)	4–I4,17
97–02	Y A/C FRT AUTO/AUX CONT (CJ2)	1649040	1	5.97	MUFFLER, I/S AIR TEMP SEN ASPIRATOR (AC–DELCO #15–71626)	4–I19,34
97–02	Y	22624066	1	41.75	SENSOR, A/C REFRIG PRESS (AC–DELCO #15–5724)	4–I15,18
97–02	Y	16267411	1	18.36	SENSOR, I/S AIR TEMP (AC–DELCO #15–72496)	4–I19,26
97–02	Y A/C FRT AUTO/AUX CONT (CJ2)	16137340	1	35.75	SENSOR, SUN LOAD TEMP (AC–DELCO #15–71849)	4–I19,24
97–99	Y A/C MAN CONT (C60)	16203780	1	17.85	SWITCH, HTR & A/C CONT BLO (08.852) (AC–DELCO #15–5691)	4–I23,12
97–98	Y07–67 A/C MAN CONT (C60)	16203804	1	19.33	SWITCH, HTR & A/C CONT SEL (W/VAC VLV) (08.850)	4–I23,6
99	Y A/C MAN CONT (C60)	16203804	1	19.33	SWITCH, HTR & A/C CONT SEL (W/VAC VLV) (08.850)	4–I23,6

9.277 CONNECTOR – RELAY, A/C Electrical

97–99	Y	12110541	1	1.12	CONNECTOR, RLY–A/C CMPR (BLACK) (6–WAY F) (W/O LEADS) (03.900)	
97	Y (EXC SIG & MKR LP (T90) (EXPORT)	12088567	1	16.45	RELAY, A/C CMPR (GRAY) (4–WAY) (AC–DELCO #15–8571)	2–G10,12
98–02	Y	12088567	1	16.45	RELAY, A/C CMPR (GRAY) (4–WAY) (AC–DELCO #15–8571)	2–G10,12
99	Y	12177233	1	23.80	RELAY, A/C CMPR (5–TERMINAL) (AC–DELCO #15–8721)	2–G2,12
98–99	Y	12177233	1	23.80	RELAY, BLO MOT (5–TERMINAL) (AC–DELCO #15–8721)	2–G2,12
00	Y 6–SPD M/TRANS (MM6), 4–SPD A/TRANS (M30), A/C MAN CONT (C60)	12177233	1	23.80	RELAY, BLO MOT (5–TERMINAL) (AC–DELCO #15–8721)	2–G2,12

9.278 KNOB, A/C Control

97–02	Y A/C MAN CONT (C60)	16230525	1	27.08	KNOB, HTR & A/C CONT BLO SW .	4–I23,8
97–02	Y A/C MAN CONT (C60)	16230525	1	27.08	KNOB, HTR & A/C CONT MODE .	4–I23,8
97–02	Y A/C FRT AUTO/AUX CONT (CJ2)	16226541	1	4.65	KNOB, HTR & A/C CONT TEMP (DRVR)	4–I23,2
97–02	Y A/C FRT AUTO/AUX CONT (CJ2)	16226543	1	4.65	KNOB, HTR & A/C CONT TEMP (PASS)	4–I23,3
97–02	Y A/C MAN CONT (C60)	16230525	1	27.08	KNOB, HTR & A/C CONT TEMP .	4–I23,8

cardiagn.com

9.280 ACTUATOR – CONNECTOR – VALVE, A/C Control

97–02	Y	52472512	1	19.36	ACTUATOR, AIR INL VLV (AC–DELCO #15–72280)	4–I4,4
97–02	Y	52487593	1	12.94	ACTUATOR, DEFR VLV (AC–DELCO #15–72605)	4–I4,49
97	Y	52472511	1	16.26	ACTUATOR, MODE VLV (AC–DELCO #15–5579)	4–I4,43
98	Y (1ST DES)	52472511	1	18.26	ACTUATOR, MODE VLV (ACTUATOR HAS SILVER HARDWARE, FOR 2ND DES SEE 52482059) (AC–DELCO #15–5579)	4–I4,43
98	Y (2ND DES)	52487750	1	30.00	ACTUATOR, MODE VLV (ACTUATOR HAS GOLD HARDWARE, FOR 1ST DES SEE 52472511) (AC–DELCO #15–72647)	4–I4,43
99–00	Y	52487750	1	30.00	ACTUATOR, MODE VLV (AC–DELCO #15–72647)	4–I4,43
01–02	Y	52487750	1	30.00	ACTUATOR, MODE VLV (AC–DELCO #15–72647)	4–I4,43
97–02	Y A/C FRT AUTO/AUX CONT (CJ2)	16163982	2	125.80	ACTUATOR, TEMP VLV	4–I4,46
97–02	Y A/C MAN CONT (C60)	16177412	1	46.00	ACTUATOR, TEMP VLV (MODE & TEMP) (AC–DELCO #15–72634)	4–I8,45
97–02	Y	12102632	1	21.83	CONNECTOR, MOT–MODE VLV ACTR (BLACK) (6–WAY F) (W/LEADS) (09.656) (AC–DELCO #PT319)	4–J2,4
98	Y	12101857	1	19.28	CONNECTOR, MOT–MODE VLV ACTR (WHITE) (2–WAY F, W/LEADS) (02.535) (AC–DELCO #PT249)	4–J2,4
02	YY67 4–SPD A/TRANS (M30) A/C FRT AUTO/AUX CONT (CJ2), T&T WHL (N37) (EXC TAIL & S LP (T89) (EXPORT)	12102632	1	21.83	CONNECTOR, MOT–MODE VLV ACTR (BLACK) (6–WAY F) (W/LEADS) (09.656) (AC–DELCO #PT319)	4–J2,4
97–02	Y	12102632	1	21.83	CONNECTOR, MOT–O/S AIR VLV ACTR (BLACK) (6–WAY F) (W/LEADS) (09.656) (AC–DELCO #PT319)	4–J2,4
01–02	YY67 4–SPD A TRANS (M30) A C FRT AUTO AUX CONT (CJ2), T&T WHL (N37), (EXC TAIL & S LP (T89) (EXPORT)	15305872	1	33.15	CONNECTOR, MOT–O/S AIR VLV ACTR (RR) (BLACK) (6–WAY M W/LEADS) (13.100) (AC–DELCO #PT1013)	4–J2,28
97–02	Y A C FRT AUTO AUX CONT (CJ2)	16171742	1	71.50	VALVE, HTR & A/C CONT VAC CONT SOL (AC–DELCO #15–72182)	4–I4,16
97–99	Y	14056648	1	5.20	VALVE, HTR & A/C CONT VAC SCE HOSE CHK (STAMPED 6648) (03.885) (AC–DELCO #14056648)	4–J2,10
00–02	Y	15733271	1	*1.20	VALVE, HTR & A/C CONT VAC SCE HOSE CHK (STAMPED 3271) (09.281)	4–J2,10
97–99	Y	10281311	1	7.03	VALVE, HTR & A/C CONT VAC TK CHK	4–J2,8

cardiagn.com

9.280 ACTUATOR – CONNECTOR – VALVE, A/C Control (Con't)

00–02	Y	460734	1	4.00	VALVE, HTR & A/C CONT VAC TK CHK (03.670)	4–J2,8
00–02	Y	10413345	1	6.93	VALVE, HTR & A/C CONT VAC TK CHK (W/VALVES & CONNECTORS)	4–J2,8

9.281 CONNECTOR – HARNESS – HOSE – TANK, A/C Vacuum and Temperature

97–00	Y	14062217	2	*2.10	CONNECTOR, HTR & A/C CONT VAC HARN (VLV SI) (90 DEGREE ELBOW) (3.6X4.0 ID, PLASTIC) (08.963)	
97–02	Y A/C FRT AUTO/AUX CONT (CJ2)	52469694	1	10.37	HARNESS, HTR & A/C CONT VAC	4–I4,34
97–02	Y A/C MAN CONT (C60)	52482272	1	19.33	HARNESS, HTR & A/C CONT VAC	4–I8,33
97–02	Y 5.7G (LS1)	12124136	1	4.20	HOSE, HTR & A/C CONT VAC TK (ENG HARN SECTION)	4–J2,5
01–02	Y 5.7S (LS6)	12124136	1	4.20	HOSE, HTR & A/C CONT VAC TK (ENG HARN SECTION)	4–J2,5
97–02	Y	10188042	1	8.37	TANK, HTR & A/C CONT VAC	4–J2,6

9.645 MODULE, Power Radio Antenna

97–02	Y07 ANTENNA, RR WDO (UV7)	16215481	1	110.06	MODULE, RDO ANT (AC–DELCO #16215481)	4–J7,8

9.647 ANTENNA – BEZEL – BOLT – BRACKET – BUFFER – CABLE – CONNECTOR – NUT – PLATE – SEAL – STRAP – STUD, Radio Antenna

98–02	Y67 PWR ANT (U75)	10285495	1	104.87	ANTENNA, RDO (W/GND STRPS) (AC–DELCO #10285495)	4–J9,5
99–02	Y37 FIXED ANT (U73)	10289035	1	10.39	ANTENNA, RDO (3/4" SHORT BASE) (W/O DIMPLE) (AC–DELCO #10289035)	4–J11,5
98	Y67 PWR ANT (U75)	10275746	1	3.48	BEZEL, RDO PWR ANT (AC–DELCO #10275746)	4–J9,4
99–02	Y37–67	10275746	1	3.48	BEZEL, RDO PWR ANT (AC–DELCO #10275746)	4–J9,4
02	YY37–67 FIXED ANT (U73), PWR ANT (U75)	10275746	1	3.48	BEZEL, RDO PWR ANT (AC–DELCO #10275746)	4–J9,4
98–02	Y67 PWR ANT (U75)	11514297	2	4.00	BOLT, RDO PWR ANT BRKT (AC–DELCO #11514297)	4–J9,8
99–02	Y37 FIXED ANT (U73)	10282230	1	37.93	BRACKET, RDO ANT	4–J11,9
98–02	Y67 PWR ANT (U75)	10275748	1	6.19	BRACKET, RDO PWR ANT	4–J9,9
97–98	Y07 ANTENNA, RR WDO (UV7)	16215951	1	41.80	BUFFER, RDO ANT (ANT SIGNAL AMPLIF) (09.645) (AC–DELCO #16215951)	4–J7,3
99–02	Y07 ANTENNA, RR WDO (UV7)	9351701	1	40.00	BUFFER, RDO ANT (ARS BUFFER MODULE ON ROOF BOW)	4–J7,3
97–02	Y07	12162815	1	14.14	CABLE, RDO ANT ((CONNECTS FRT GLASS TO RDO ANT AMP)) (LGTH=3455) (AC–DELCO #12162815)	4–J7,10
97–02	Y07	12162816	1	9.05	CABLE, RDO ANT ((CONNECTS FRT GLASS TO RDO ANT AMP)) (LGTH=2500) (AC–DELCO #12162816)	4–J7,10

cardiagn.com

9.647 ANTENNA – BEZEL – BOLT – BRACKET – BUFFER – CABLE – CONNECTOR – NUT – PLATE – SEAL – STRAP – STUD, Radio Antenna (Con't)

97–02	Y07 ANTENNA, RR WDO (UV7)	12189554	1	14.23	CABLE, RDO ANT (COILED CORD JUMPER) (CONNECTS RR GLASS ANT TO RDO ANT AMP)) (AC–DELCO #12189554)	4–J7,4
98	Y67 SPEAKER SYSTEM 6 (UZ6)	12186127	1	6.97	CABLE, RDO ANT (3825MM LONG) (AC–DELCO #12186127)	4–J9,1
98–02	Y67 SPEAKER SYSTEM 6 (UZ6)	15324139	1	8.37	CABLE, RDO ANT (4140MM LONG) (AC–DELCO #15324139)	4–J9,1
99–02	Y37	15324139	1	8.37	CABLE, RDO ANT (4140MM LONG) (AC–DELCO #15324139)	4–J9,1
97–00	Y07 ANTENNA, RR WDO (UV7)	10280798	1	18.55	CABLE, RDO ANT CBL EXTN (CONNECTS RDO ANTENNA AMPLIF/BUFFER TO ARS MDL) (W/INTEGRAL CLIPS) (AC–DELCO #10280798)	4–J7,6
01–02	Y07 ANTENNA, RR WDO (UV7)	10442965	1	26.72	CABLE, RDO ANT CBL EXTN (AC–DELCO #10442965)	4–J7,6
97–02	Y07	15305983	1	25.77	CONNECTOR, MDL–RDO ANT (3–WAY F, SLV/PIN, W/LEADS) (AC–DELCO #PT1077)	4–J7,8
98–02	Y67 PWR ANT (U75)	88896816	1		NUT, RDO PWR ANT (AC–DELCO #88896816)	
99–02	Y37	10264812	1	3.45	PLATE, RDO ANT BRKT STUD (12.980)	4–J9,14
99–02	Y67	10264812	1	3.45	PLATE, RDO ANT BRKT STUD (12.980)	4–J9,14
98	Y67 PWR ANT (U75)	10264812	1	3.45	PLATE, RDO PWR ANT BRKT STUD (12.980)	4–J9,14
00–01	YY37–67	11515174	2	*1.75	SEAL, RDO ANT CBL (4 1/4"X7 1/2") (TRIM AS REQ'D) (15.492)	
98	Y67 PWR ANT (U75)	10415038	2	3.45	SEAL, RDO PWR ANT BRKT STUD PLT (15.222)	4–J11,12
99–02	Y37–67	10415038	2	3.45	SEAL, RDO PWR ANT BRKT STUD PLT (15.222)	4–J11,12
98	Y67 PWR ANT (U75)	12189867	1	10.76	STRAP, RDO ANT CBL (2–WIRE ANT CBL STRAP) (W/SHIELD & CLIPS)	4–J9,11
99–02	Y37–67 FIXED ANT (U73), PWR ANT (U75)	12189867	1	10.76	STRAP, RDO ANT CBL	4–J9,11
98–02	Y67	10278878	1	.29	STUD, RDO ANT (ANTENNA GROUND) (02.559)	4–J9,2
99–02	Y37	10278878	1	.29	STUD, RDO ANT (ANTENNA GROUND) (02.559)	4–J9,2

9.649 KNOB, Radio Control

97–02	Y	16195412	2	5.96	KNOB, RDO SPKR CONT (AC–DELCO #16195412)	4–J13,3
97–02	Y	16195412	2	5.96	KNOB, RDO TONE CONT (AC–DELCO #16195412)	4–J13,3
97–98	Y STEREO, AM/FM W/AUTO REV CASSETTE, AUTO TONE (UL0), SPEAKER SYSTEM 6 (UZ6), STEREO (UN0)	16195409	1	5.77	KNOB, RDO TUNING CONT (AC–DELCO #16195409)	4–J13,2
99–02	Y STEREO, AM/FM W/AUTO REV CASSETTE, AUTO TONE (UL0), SPEAKER SYSTEM 6 (UZ6), STEREO (UN0), 4 SPKR SYS (UQ5)	16195409	1	5.77	KNOB, RDO TUNING CONT (AC–DELCO #16195409)	4–J13,2

cardiagn.com

9.649 KNOB, Radio Control (Con't)

99–02	Y37 STEREO, AM/FM W/AUTO REV CASSETTE, AUTO TONE (UL0), SPEAKER SYSTEM 6 (UZ6), (EXC JAPANESE RDO FREQ (UK1) (EXPORT), EUROPEAN RDO FREQ (UL2) (EXPORT)	16195409	1	5.77	KNOB, RDO TUNING CONT (AC–DELCO #16195409)	4–J13,2
97–98	Y STEREO, AM/FM W/AUTO REV CASSETTE, AUTO TONE (UL0), SPEAKER SYSTEM 6 (UZ6), STEREO (UN0)	16189159	1	5.96	KNOB, RDO VOL CONT (WING) (SPD CONT VOL) (AC–DELCO #16189159)	4–J13,4
97–98	Y STEREO, AM/FM W/AUTO REV CASSETTE, AUTO TONE (UL0), SPEAKER SYSTEM 6 (UZ6), STEREO (UN0)	16195410	1	5.96	KNOB, RDO VOL CONT (AC–DELCO #16195410)	4–J13,4
99–02	Y STEREO, AM/FM W/AUTO REV CASSETTE, AUTO TONE (UL0), SPEAKER SYSTEM 6 (UZ6), STEREO (UN0), 4 SPKR SYS (UQ5) ..	16189159	1	5.96	KNOB, RDO VOL CONT (WING) (SPD CONT VOL) (AC–DELCO #16189159)	4–J13,4
99–01	Y STEREO, AM/FM W/AUTO REV CASSETTE, AUTO TONE (UL0), SPEAKER SYSTEM 6 (UZ6), STEREO (UN0), 4 SPKR SYS (UQ5) ..	16195410	1	5.96	KNOB, RDO VOL CONT (AC–DELCO #16195410)	4–J13,4
99–02	Y37 STEREO, AM/FM W/AUTO REV CASSETTE, AUTO TONE (UL0), 4 SPKR SYS (UQ5), (EXC JAPANESE RDO FREQ (UK1) (EXPORT), EUROPEAN RDO FREQ (UL2) (EXPORT)	16189159	1	5.96	KNOB, RDO VOL CONT (WING) (SPD CONT VOL) (AC–DELCO #16189159)	4–J13,4
99–01	Y37 STEREO, AM/FM W/AUTO REV CASSETTE, AUTO TONE (UL0), 4 SPKR SYS (UQ5), (EXC JAPANESE RDO FREQ (UK1) (EXPORT), EUROPEAN RDO FREQ (UL2) (EXPORT)	16195410	1	5.96	KNOB, RDO VOL CONT (AC–DELCO #16195410)	4–J13,4
02	Y STEREO, AM/FM W/AUTO REV CASSETTE, AUTO TONE (UL0), SPEAKER SYSTEM 6 (UZ6), (EXC EUROPEAN RDO FREQ (UL2) (EXPORT)	16195410	1	5.96	KNOB, RDO VOL CONT (AC–DELCO #16195410)	4–J13,4
	*EXPORT**********EXPORT**********EXPORT**********EXPORT**********EXPORT*					
00–02	Y STEREO, AM/FM W/AUTO REV CASSETTE, AUTO TONE (UL0), EUROPEAN RDO FREQ (UL2) (EXPORT), SPEAKER SYSTEM 6 (UZ6)	16234005	1	6.19	KNOB, RDO VOL CONT (SPD CONT VOL) (AC–DELCO #16234005)	4–J13,4
00–02	Y STEREO, AM/FM W/AUTO REV CASSETTE, AUTO TONE (UL0), EUROPEAN RDO FREQ (UL2) (EXPORT), SPEAKER SYSTEM 6 (UZ6)	16234117	1	6.19	KNOB, RDO VOL CONT (AC–DELCO #16234117)	4–J13,4

cardiagn.com

9.650 AMPLIFIER – CONNECTOR – RADIO – RELAY – SPEAKER, Radio Receiver

97–02	Y07 SPEAKER SYSTEM 6 (UZ6)	10290827	1	269.00	AMPLIFIER, RDO SPKR (BOSE AUDIO SYSTEM) (AC–DELCO #10290827)	4–J13,29
98	Y67 SPEAKER SYSTEM 6 (UZ6)	10283023	1	289.00	AMPLIFIER, RDO SPKR (AC–DELCO #10283023)	4–J19,32
99–02	Y37–67 SPEAKER SYSTEM 6 (UZ6)	10283023	1	289.00	AMPLIFIER, RDO SPKR (AC–DELCO #10283023)	4–J19,32
97–02	Y07	12110088	1	5.33	CONNECTOR, MDL–RDO CONT (GRAY) (24–WAY F) (04.720) (AC–DELCO #12110088)	4–J13,33
98–02	Y	12110206	1	4.42	CONNECTOR, MDL–RDO CONT (24–WAY FEMALE W/O LEADS) (BLUE) (24–WAY F W/O LEADS) (03.670)	4–J13,33
01–02	YY07	12102632	1	21.83	CONNECTOR, MDL–RDO CONT (BLACK) (6–WAY F) (W/LEADS) (09.656) (AC–DELCO #PT319)	4–J13,33
02	YY67 4–SPD A/TRANS (M30), A/C FRT AUTO/AUX CONT (CJ2), T&T WHL (N37), (EXC TAIL & S/LP (T89) (EXPORT)	12110206	1	4.42	CONNECTOR, MDL–RDO CONT (24–WAY FEMALE W/O LEADS) (BLUE) (24–WAY F W/O LEADS) (03.670)	4–J13,33
97–99	Y STEREO (UN0), SPEAKER SYSTEM 6 (UZ6)	16257601	1	1049.00	RADIO, AM/FM STEREO & CLK & CD PLYR (AC–DELCO #16257601)	4–J13,1
00–02	Y STEREO (UN0), SPEAKER SYSTEM 6 (UZ6)	9390211	1	749.00	RADIO, AM/FM STEREO & CLK & CD PLYR (AC–DELCO #9390211)	4–J13,1
97–99	Y STEREO, AM/FM W/AUTO REV CASSETTE, AUTO TONE (UL0), SPEAKER SYSTEM 6 (UZ6), (EXC JAPANESE RDO FREQ (UK1) (EXPORT), EUROPEAN RDO FREQ (UL2) (EXPORT)	16257631	1	689.00	RADIO, AM/FM STEREO & CLK & T/PLYR (AC–DELCO #16257631)	4–J13,6
99–00	Y37 STEREO, AM/FM W/AUTO REV CASSETTE, AUTO TONE (UL0), 4 SPKR SYS (UQ5), (EXC JAPANESE RDO FREQ (UK1) (EXPORT), EUROPEAN RDO FREQ (UL2) (EXPORT)	16210221	1	519.00	RADIO, AM/FM STEREO & CLK & T/PLYR (AC–DELCO #16210221)	4–K2,20
00–02	Y STEREO, AM/FM W/AUTO REV CASSETTE, AUTO TONE (UL0), SPEAKER SYSTEM 6 (UZ6), (EXC JAPANESE RDO FREQ (UK1) (EXPORT), EUROPEAN RDO FREQ (UL2) (EXPORT)	9390231	1	609.00	RADIO, AM/FM STEREO & CLK & T/PLYR (AC–DELCO #9390231) .	4–J13,6
97–02	Y	12193604	1	23.80	RELAY, RDO SPKR AMPF (GRAY) (SPST 280 MINI) (4–TERMINAL) (09.778) (AC–DELCO #15–8733)	2–G10,41
97–02	Y SPEAKER SYSTEM 6 (UZ6)	10447355	2	319.00	SPEAKER, RDO FRT (3"TWIDDLER, 7"WOOFER, 100W AMP) (AC–DELCO #10447355) .	4–J13,38
99–00	Y37 4 SPKR SYS (UQ5)	16255371	2	77.00	SPEAKER, RDO FRT (AC–DELCO #16255371)	4–K2,38

cardiagn.com

9.650 AMPLIFIER – CONNECTOR – RADIO – RELAY – SPEAKER, Radio Receiver (Con't)

*EXPORT**********EXPORT**********EXPORT**********EXPORT**********EXPORT*

97–99	Y STEREO, AM/FM W/AUTO REV CASSETTE, AUTO TONE (UL0), EUROPEAN RDO FREQ (UL2) (EXPORT), SPEAKER SYSTEM 6 (UZ6)	16257611	1	699.00	RADIO, AM/FM STEREO & CLK & T/PLYR (AC–DELCO #16257611)	4–J13,6
97–99	Y JAPANESE RDO FREQ (UK1) (EXPORT), STEREO, AM/FM W/AUTO REV CASSETTE, AUTO TONE (UL0), SPEAKER SYSTEM 6 (UZ6)	16257621	1	689.00	RADIO, AM/FM STEREO & CLK & T/PLYR (AC–DELCO #16257621)	4–J13,6
00–02	Y JAPANESE RDO FREQ (UK1) (EXPORT), STEREO, AM/FM W/AUTO REV CASSETTE, AUTO TONE (UL0), SPEAKER SYSTEM 6 (UZ6)	9390221	1	649.00	RADIO, AM/FM STEREO & CLK & T/PLYR (AC–DELCO #9390221) .	4–J13,6
00–02	Y STEREO, AM/FM W/AUTO REV CASSETTE, AUTO TONE (UL0), EUROPEAN RDO FREQ (UL2) (EXPORT), SPEAKER SYSTEM 6 (UZ6)	9390241	1	659.00	RADIO, AM/FM STEREO & CLK & T/PLYR (AC–DELCO #9390241) .	4–J13,6

9.656 CONNECTOR, Radio and Speaker

99–00	Y	12117371	1	25.70	CONNECTOR, INLINE–TO CD PLYR (3–WAY M W/LEADS) (02.530) (AC–DELCO #PT504)	4–J9,3
97–02	Y	12117371	1	25.70	CONNECTOR, INLINE–TO PWR ANT (3–WAY M W/LEADS) (02.530) (AC–DELCO #PT504)	4–J9,3
97–02	Y	12085456	1	53.04	CONNECTOR, RDO (10–WAY FEMALE M/P 100 (W/LEADS) .) (BLACK) (10–WAY F) (W/LEADS) (02.535) (AC–DELCO #PT108)	4–J13,33
97–02	Y	12102628	1	61.71	CONNECTOR, RDO (NATURAL) (9–WAY F, W/LEADS) (04.329) (AC–DELCO #PT315)	4–J13,33
97–02	Y	12102636	1	22.09	CONNECTOR, RDO (NATURAL) (4–WAY) (W/LEADS) (AC–DELCO #PT323)	4–J13,33
97–02	Y	12125670	1	22.95	CONNECTOR, RDO (WHITE) (10–WAY F) (W/LEADS) (AC–DELCO #PT582)	4–J13,33
02	YY67 4–SPD A/TRANS (M30), A/C FRT AUTO/AUX CONT (CJ2), T&T WHL (N37) (EXC TAIL & S/LP (T89) (EXPORT)	12085486	1	53.04	CONNECTOR, RDO (BLACK) (10–WAY F) (W/LEADS) (02.535) (AC–DELCO #PT108)	4–J13,33
02	YY67 4–SPD A/TRANS (M30), A/C FRT AUTO/AUX CONT (CJ2), T&T WHL (N37), (EXC TAIL & S/LP (T89) (EXPORT)	12102628	1	61.71	CONNECTOR, RDO (NATURAL) (9–WAY F, W/LEADS) (04.329) (AC–DELCO #PT315)	4–J13,33
02	YY67 4–SPD A/TRANS (M30), A/C FRT AUTO/AUX CONT (CJ2), T&T WHL (N37), (EXC TAIL & S/LP (T89) (EXPORT)	12102636	1	22.09	CONNECTOR, RDO (NATURAL) (4–WAY) (W/LEADS) (AC–DELCO #PT323)	4–J13,33

cardiagn.com

9.656 CONNECTOR, Radio and Speaker (Con't)

02	YY67 4–SPD A/TRANS (M30), 6–SPD M/TRANS (MM6), A/C FRT AUTO/AUX CONT (CJ2), A/C MAN CONT (C60), (EXC TAIL & S/LP (T89) (EXPORT)	12125670	1	22.95	CONNECTOR, RDO (WHITE) (10–WAY F) (W/LEADS) (AC–DELCO #PT582)	4–J13,33
97–02	Y	12101825	2	18.01	CONNECTOR, SPKR–RDO (GRAY) (2–WAY F W/LEADS) (INDEX TAB CTR CAVITY A&B) (02.535) (AC–DELCO #PT217)	4–J13,11

9.665 EMBLEM – GRILLE – HOUSING – NUT – RETAINER – SCREEN – SPEAKER, Radio Auxiliary Speakers

97–02	Y SPEAKER SYSTEM 6 (UZ6)	10291759	2	11.78	EMBLEM, RDO FRT S/D SPKR GRL	4–J13,35
97–00	Y SPEAKER SYSTEM 6 (UZ6), (19I)	10274045	RH	27.93	GRILLE, RDO FRT S/D SPKR (BLACK)	4–J13,37
97–00	Y SPEAKER SYSTEM 6 (UZ6), (19I)	10274046	LH	27.93	GRILLE, RDO FRT S/D SPKR (BLACK)	4–J13,37
97–98	Y SPEAKER SYSTEM 6 (UZ6), (92I)	10274047	RH	27.93	GRILLE, RDO FRT S/D SPKR (PEWTER)	4–J13,37
97–98	Y SPEAKER SYSTEM 6 (UZ6), (92I)	10274048	LH	27.93	GRILLE, RDO FRT S/D SPKR (PEWTER)	4–J13,37
97–98	Y (94I)	10274049	RH	27.93	GRILLE, RDO FRT S/D SPKR (RED)	4–J13,37
97–98	Y (94I)	10274050	LH	27.93	GRILLE, RDO FRT S/D SPKR (RED)	4–J13,37
98–00	Y07–67 SPEAKER SYSTEM 6 (UZ6), (67I)	10285250	LH	27.93	GRILLE, RDO FRT S/D SPKR (CAMEL)	4–J13,37
98–00	Y07–67 SPEAKER SYSTEM 6 (UZ6), (67I)	10285251	RH	27.93	GRILLE, RDO FRT S/D SPKR (CAMEL)	4–J13,37
99–00	Y07–67 SPEAKER SYSTEM 6 (UZ6), (92I)	10274047	RH	27.93	GRILLE, RDO FRT S/D SPKR (PEWTER)	4–J13,37
99–00	Y07–67 SPEAKER SYSTEM 6 (UZ6), (92I)	10274048	LH	27.93	GRILLE, RDO FRT S/D SPKR (PEWTER)	4–J13,37
99	Y07–67 SPEAKER SYSTEM 6 (UZ6), (94I)	10274049	RH	27.93	GRILLE, RDO FRT S/D SPKR (RED)	4–J13,37
99	Y07–67 SPEAKER SYSTEM 6 (UZ6), (94I)	10274050	LH	27.93	GRILLE, RDO FRT S/D SPKR (RED)	4–J13,37
99–00	Y37 4 SPKR SYS (UQ5), (19I)	10291439	LH	27.93	GRILLE, RDO FRT S/D SPKR (BLACK)	4–K2,35
99–00	Y37 4 SPKR SYS (UQ5), (19I)	10291440	RH	26.65	GRILLE, RDO FRT S/D SPKR (BLACK)	4–K2,35
00	Y07–67 SPEAKER SYSTEM 6 (UZ6), (70I)	10409257	LH	27.93	GRILLE, RDO FRT S/D SPKR (RED)	4–J13,37
00	Y07–67 SPEAKER SYSTEM 6 (UZ6), (70I)	10409258	RH	27.93	GRILLE, RDO FRT S/D SPKR (RED)	4–J13,37
01–02	Y (19I)	10274045	RH	27.93	GRILLE, RDO FRT S/D SPKR (BLACK)	4–J13,37
01–02	Y (19I)	10274046	LH	27.93	GRILLE, RDO FRT S/D SPKR (BLACK)	4–J13,37
01–02	Y (70I)	10409257	LH	27.93	GRILLE, RDO FRT S/D SPKR (RED)	4–J13,37
01–02	Y (70I)	10409258	RH	27.93	GRILLE, RDO FRT S/D SPKR (RED)	4–J13,37
01–02	Y07–67 (92I)	10274047	RH	27.93	GRILLE, RDO FRT S/D SPKR (PEWTER)	4–J13,37
01–02	Y07–67 (92I)	10274048	LH	27.93	GRILLE, RDO FRT S/D SPKR (PEWTER)	4–J13,37
01–02	Y07–67 (67I)	10285250	LH	27.93	GRILLE, RDO FRT S/D SPKR (CAMEL)	4–J13,37
01–02	Y07–67 (67I)	10285251	RH	27.93	GRILLE, RDO FRT S/D SPKR (CAMEL)	4–J13,37
97–02	Y07	10287668	2	9.02	GRILLE, RDO RR SPKR (BLACK)	4–J13,7

cardiagn.com

9.665 EMBLEM – GRILLE – HOUSING – NUT – RETAINER – SCREEN – SPEAKER, Radio Auxiliary Speakers (Con't)

98–02	Y67	10414162	RH	27.93	GRILLE, RDO RR SPKR	4–J19,9
98–02	Y67	10414163	LH	27.93	GRILLE, RDO RR SPKR	4–J19,9
97–02	Y07	10288371	LH	27.68	HOUSING, RDO RR SPKR (MTS SPKR)	4–J13,15
97–02	Y07	10288372	RH	27.68	HOUSING, RDO RR SPKR (MTS SPKR)	4–J13,15
98–02	Y67	10272205	LH	24.60	HOUSING, RDO RR SPKR	4–J19,2
98–02	Y67	10272206	RH	24.60	HOUSING, RDO RR SPKR	4–J19,2
99–02	Y37	10272205	LH	24.60	HOUSING, RDO RR SPKR	4–J19,2
99–02	Y37	10272206	RH	24.60	HOUSING, RDO RR SPKR	4–J19,2
97–02	Y SPEAKER SYSTEM 6 (UZ6)	25536302	1	3.33	NUT, RDO SPKR AMPF BRKT (PCSN #2) (FASTENS RDO SPKR AMPF TO STRG COL BRKT) (4.2X1.41 TAPPING) (SPL) (03.430)	4–J13,27
98	Y	20540336	2	3.45	RETAINER, RDO RR SPKR GRL (PAINT TO MATCH) (FITS .18 HOLE, .7 LG, .43 OD, NYLON) (14.630)	
98–02	Y67	15748479	4	*.62	RETAINER, RDO RR SPKR GRL (13.0MM WIDE) (YELLOW) (U–BASE) (16.575)	4–J19,8
98–02	Y67	16754704	2	*.53	RETAINER, RDO RR SPKR GRL (10.056)	4–J19,12
98–02	Y67	20514862	2	*.52	RETAINER, RDO RR SPKR GRL (12.804)	4–J19,11
97–02	Y	10291755	LH	8.20	SCREEN, RDO FRT S/D SPKR	4–J13,36
97–02	Y	10291756	RH	8.20	SCREEN, RDO FRT S/D SPKR	4–J13,36
97–02	Y07 SPEAKER SYSTEM 6 (UZ6)	10290828	2	26.00	SPEAKER, RDO RR (BEHIND B PILLAR FORWARD OF WHL WELL 6" TWIDDLER BOSE) (AC–DELCO #10290828)	4–J13,13
98–02	Y67 SPEAKER SYSTEM 6 (UZ6)	10278959	2	22.00	SPEAKER, RDO RR (5 1/4" TWIDDLER–BOSE AUDIO SYSTEM) (AC–DELCO #10278959)	4–J19,6
99–02	Y37 4 SPKR SYS (UQ5), SPEAKER SYSTEM 6 (UZ6)	10278959	2	22.00	SPEAKER, RDO RR (5 1/4" TWIDDLER–BOSE AUDIO SYSTEM) (AC–DELCO #10278959)	4–J19,6

9.667 BRACKET – RIVET – SEAL, Radio Mounting

97–02	Y MULTIPLE CD PLYR (U1S)	10291941	LH	6.41	BRACKET, AUDIO DISC PLYR (09.670) (AC–DELCO #10291941)	4–J13,19
97–02	Y MULTIPLE CD PLYR (U1S)	10291942	RH	6.58	BRACKET, AUDIO DISC PLYR (09.670) (AC–DELCO #10291942)	4–J13,19
97–98	Y MULTIPLE CD PLYR (U1S)	10274355	4	*.52	RIVET, AUDIO DISC PLYR BRKT (10.512)	
99–02	Y MULTIPLE CD PLYR (U1S)	10274355	AR	*.52	RIVET, AUDIO DISC PLYR BRKT (10.512)	
98	Y	10415038	4	3.45	SEAL, AUDIO DISC PLYR BRKT STUD PLT (15.222)	

cardiagn.com

9.670 CARTRIDGE – CONNECTOR – PLATE – PLAYER, Stereo Tape/Disc Player

97–02	Y MULTIPLE CD PLYR (U1S) .	25678545	1	56.53	CARTRIDGE, CD/PLYR (12 DISC) (AC–DELCO #25678545)	4–J13,17
97–02	Y	12085486	1	53.04	CONNECTOR, PLYR–CD (BLACK) (10–WAY F) (W/LEADS) (02.535) (AC–DELCO #PT108)	4–J13,11
01–02	YY67 6–WAY PWR P/SEAT ADJR (AG2), SPEAKER SYSTEM 6 (UZ6), (EXC MULTIPLE CD PLYR (U1S) ..	12101864	1	18.16	CONNECTOR, PLYR–CD (BLACK) (3–WAY F W/LEADS) (02.535) (AC–DELCO #PT256)	4–J19,4
97–02	Y MULTIPLE CD PLYR (U1S) .	10264812	2	3.45	PLATE, CD/PLYR BRKT STUD (12.980)	4–J13,18
97–02	Y MULTIPLE CD PLYR (U1S) .	25685332	1	823.07	PLAYER, AUDIO DISC (VERT MNT) (AC–DELCO #25685332)	4–J13,17

9.709 CONNECTOR – HOUSING – LIGHTER – PLUG – RECEPTACLE – RETAINER, Cigarette Lighter

97–01	Y	12085504	1	17.91	CONNECTOR, C/LTR (2–WAY M/F) (W/LEADS) (USE T/W 11516142 HOUSING C/LTR) (02.535) (AC–DELCO #PT125)	
02	YY67	12085504	1	17.91	CONNECTOR, C/LTR (2–WAY M/F) (W/LEADS) (USE T/W 11516142 HOUSING C/LTR) (02.535) (AC–DELCO #PT125)	
97–98	Y	12102616	1	14.89	CONNECTOR, RCPT–ACSRY PWR (2–WAY F) (W/LEADS) (02.530) (AC–DELCO #PT303)	5–H2,31
98–02	Y	12126486	1	61.98	CONNECTOR, RCPT–ACSRY PWR (3–WAY FEMALE M/P 280 FLEX–LOCK (W/LEADS) .) (3–WAY F FLEX LOCK W/LEADS) (02.694) (AC–DELCO #PT756)	5–H2,31
98–02	Y	12129490	1	2.35	CONNECTOR, RCPT–ACSRY PWR (3–WAY MALE M/P 280 (W/O LEADS) .) (3–WAY M, W/O LEADS) (CLIP SLOT) (13.100) .	5–H2,31
99	Y (1ST DES)	12102616	1	14.89	CONNECTOR, RCPT–ACSRY PWR (2–WAY F) (W/LEADS) (02.530) (2–WAY F, FOR 2ND DES SEE 15305985 (PT1079) (AC–DELCO #PT303)	5–H2,31
99	Y (2ND DES)	15305985	1	18.21	CONNECTOR, RCPT–ACSRY PWR (3–WAY F, W/LEADS) (3–WAY F, FOR 1ST DES SEE 12102616 (PT303) (AC–DELCO #PT1079) .	5–H2,31
00–02	Y	15305985	1	18.21	CONNECTOR, RCPT–ACSRY PWR (3–WAY FEMALE M/P 280 FLXLK (W/LEADS) .) (3–WAY F, W/LEADS) (AC–DELCO #PT1079)	5–H2,31
01–02	YY67	12126486	1	61.98	CONNECTOR, RCPT–ACSRY PWR (3–WAY FEMALE M/P 280 FLEX–LOCK (W/LEADS) .) (3–WAY F FLEX LOCK W/LEADS) (02.694) (AC–DELCO #PT756)	5–H2,31

cardiagn.com

9.709 CONNECTOR – HOUSING – LIGHTER – PLUG – RECEPTACLE – RETAINER, Cigarette Lighter (Con't)

02	YY67 4–SPD A/TRANS (M30), A/C FRT AUTO/AUX CONT (CJ2), T&T WHL (N37), (EXC TAIL & S/LP (T89) (EXPORT)	12129490	1	2.35	CONNECTOR, RCPT–ACSRY PWR (3–WAY MALE M/P 280 (W/O LEADS) . SHIPPED BULK FROM PACKARD.) (3–WAY M, W/O LEADS) (CLIP SLOT) (13.100) .	5–H2,31
02	YY67 4–SPD A/TRANS (M30), A/C FRT AUTO/AUX CONT (CJ2), T&T WHL (N37), (EXC TAIL & S/LP (T89) (EXPORT)	15305985	1	18.21	CONNECTOR, RCPT–ACSRY PWR (3–WAY FEMALE M/P 280 FLXLK (W/LEADS) .) (3–WAY F, W/LEADS) (AC–DELCO #PT1079)	5–H2,31
97–02	Y	11516142	1	8.13	HOUSING, C/LTR (MATES W/CONN 12085504, (CASCO) 1–PIN CONN)	5–E25,27
97–98	Y	11516141	1	5.53	LIGHTER, CIG (BLACK) (SM) (CASCO)	5–E25,26
99–02	Y	11516140	1	5.53	LIGHTER, CIG (BLACK) (CASCO) (W/LARGE, PLASTIC KNOB) ..	5–F14,26
97–99	Y	12450056	1	.89	PLUG, ACSRY PWR RCPT OPG .	5–H2,17
97–98	Y	10202970	1	6.14	RECEPTACLE, ACSRY PWR	5–H2,16
99	Y (1ST DES)	10202970	1	6.14	RECEPTACLE, ACSRY PWR (USED IN 23.0MM DIA HOLE FOR AUX PWR OUTLET, FOR 2ND DES SEE #12450044)	5–H2,16
99	Y (2ND DES)	12450044	1	6.14	RECEPTACLE, ACSRY PWR (CAVITY A IS B+, CAVITY C IS GND, CAVITY B IS FOR LIGHTED RING) (USED IN 28.0MM SLOTTED HOLE FOR AUX PWR OUTLET, FOR 1ST DES SEE #10202970)	5–H2,16
00–02	Y	12450044	1	6.14	RECEPTACLE, ACSRY PWR (CAVITY A IS B+, CAVITY C IS GND, CAVITY B IS FOR LIGHTED RING)	5–H2,16
97–98	Y	10202971	1	3.33	RETAINER, ACSRY PWR RCPT ..	5–H2,30
99	Y (1ST DES)	10202971	1	3.33	RETAINER, ACSRY PWR RCPT (USED IN 23.0MM DIA HOLE FOR AUX PWR OUTLET, FOR 2ND DES SEE #12450047)	5–H2,30
99	Y (2ND DES)	12450047	1	3.33	RETAINER, ACSRY PWR RCPT (BLACK) (WITH CAP) (USED IN 28.0MM SLOTTED HOLE FOR AUX PWR OUTLET, FOR 1ST DES SEE #10202971)	5–H2,17
00–02	Y	12450047	1	3.33	RETAINER, ACSRY PWR RCPT (BLACK) (WITH CAP)	5–H2,17
97–02	Y	11516144	1	*.57	RETAINER, C/LTR HSG (CASCO)	5–E25,31

9.715 DISPLAY – PLATE – SWITCH, Instrument Cluster Head Up

99–00	Y HEAD UP DISPLAY (UV6) ..	10279814	1	1062.89	DISPLAY, INST CSTR HEAD UP (HUD ALONE) (AC–DELCO #10279814)	5–G2,41
01–02	Y07–67 HEAD UP DISPLAY (UV6)	10279814	1	1062.89	DISPLAY, INST CSTR HEAD UP (HUD ALONE) (AC–DELCO #10279814)	5–G2,41
02	YY37	10316475	1	1062.89	DISPLAY, INST CSTR HEAD UP (AC–DELCO #10316475)	5–G2,41
99–02	YY07–67 HEAD UP DISPLAY (UV6)	14058658	2	3.45	PLATE, INST CSTR HEAD UP DISPLAY ANC (12.986)	

cardiagn.com

9.715 DISPLAY – PLATE – SWITCH, Instrument Cluster Head Up (Con't)

02	YY37 HEAD UP DISPLAY (UV6)	14058658	2	3.45	PLATE, INST CSTR HEAD UP DISPLAY ANC (12.986)	
99–00	Y HEAD UP DISPLAY (UV6) ..	12198648	1	103.37	SWITCH, INST CSTR HEAD UP DISPLAY DIMR (AC–DELCO #12198648)	5–G2,42
01–02	Y07–67 HEAD UP DISPLAY (UV6)	12198648	1	103.37	SWITCH, INST CSTR HEAD UP DISPLAY DIMR (AC–DELCO #12198648)	5–G2,42

9.735 CLUSTER – NUT, Instrument Panel Gage

97–02	Y	25536302	2	3.33	NUT, INST CSTR (4.2X1.41 TAPPING) (SPL) (03.430)	5–F6,30
02	Y	11513599	2	3.48	NUT, INST CSTR (M4.2X1.41TAP) (U TYPE) (PZCR) (08.921) (AC–DELCO #11513599)	
	*EXPORT**********EXPORT**********EXPORT**********EXPORT**********EXPORT*					
02	YY37 SPEEDO (U19) (EXPORT), ELEK GA CSTR (U52)	10315862	1	654.10	CLUSTER, INST (W/O HUD) (AC–DELCO #10315862)	

9.743 BEZEL, Instrument Cluster

97–02	Y ELEK GA CSTR (U52)	10417123	1	156.49	BEZEL, I/P CSTR TR PLT	5–F6,29

9.744 BULB, Instrument Cluster

97–02	Y	12533422	1	7.66	BULB, INST CSTR (AC–DELCO #12533422)	5–F6,3

9.748 LENS, Instrument Cluster

97–02	Y ELEK GA CSTR (U52)	12533420	1	43.26	LENS, INST CSTR (AC–DELCO #12533420)	5–F6,37

9.765 BULB – CONNECTOR, Instrument Cluster Warning

97	Y	16056613	1	4.81	BULB, ELEK TRACT CONT IND LP (.5CP) (09.279) (AC–DELCO #16056613)	4–G8,75
98	Y (EXC ACTIVE BRAKE CTL (JL4)	16056613	1	4.81	BULB, ELEK TRACT CONT IND LP (.5CP) (09.279) (AC–DELCO #16056613)	4–G8,75
99	Y (EXC CHASSIS, REALTIME DAMPING (F45), ACTIVE BRAKE CTL (JL4)	16056613	1	4.81	BULB, ELEK TRACT CONT IND LP (.5CP) (09.279) (AC–DELCO #16056613)	4–G8,75
99	YY07–67 CHASSIS, REALTIME DAMPING (F45), (EXC ACTIVE BRAKE CTL (JL4)	16056613	1	4.81	BULB, ELEK TRACT CONT IND LP (.5CP) (09.279) (AC–DELCO #16056613)	4–G8,75
97–02	Y	12102747	1	21.73	CONNECTOR, LP–BRK IND (BLACK) (2–WAY F W/LEADS) (03.670) (AC–DELCO #PT374)	2–K7,14
	*EXPORT**********EXPORT**********EXPORT**********EXPORT**********EXPORT*					
00–02	Y07–67 (EXC C88), ACTIVE BRAKE CTL (JL4)	16056613	1	4.81	BULB, ELEK TRACT CONT IND LP (.5CP) (09.279) (AC–DELCO #16056613)	4–G8,75

cardiagn.com

9.768 BEZEL – CONNECTOR – SWITCH, Driver Information Display

99–02	Y	10425223	1	16.10	BEZEL, DRVR INFO DISPLAY (INCLS BEZEL)	5–G2,5
97–01	Y	12065803	1	3.33	CONNECTOR, DISPLAY–DRVR INFO (34–WAY F) (09.735)	5–F2,26
02	YY67	12065803	1	3.33	CONNECTOR, DISPLAY–DRVR INFO (34–WAY F) (09.735)	5–F2,26
97–02	Y ELEK GA CSTR (U52)	12135152	1	69.52	SWITCH, DRVR INFO DISPLAY (AC–DELCO #12135152)	5–F6,26

9.769 BULB, Vehicle Navigation/Information

97–98	Y 5.7G (LS1), ELEK GA CSTR (U52)	16056613	3	4.81	BULB, DRVR INFO DISPLAY SW (W/O BOOT) (.5CP) (09.279) (AC–DELCO #16056613)	5–G2,49
99–02	Y ELEK GA CSTR (U52)	16056613	3	4.81	BULB, DRVR INFO DISPLAY SW (W/O BOOT) (.5CP) (09.279) (AC–DELCO #16056613)	5–G2,49

9.770 CONNECTOR – SENSOR, Ambient Outside Air Temperature

97–99	Y	12102747	1	21.73	CONNECTOR, SEN–AMB AIR TEMP (BLACK) (2–WAY F W/LEADS) (03.670) (AC–DELCO #PT374)	4–I19,5
99–02	Y37	12102747	1	21.73	CONNECTOR, SEN–O/S AIR TEMP (BLACK) (2–WAY F W/LEADS) (03 670) (AC–DELCO #PT374)	4–I19,5
00	Y07–67	12102747	1	21.73	CONNECTOR, SEN–O/S AIR TEMP (BLACK) (2–WAY F W/LEADS) (03.670) (AC–DELCO #PT374)	4–I19,5
97–02	Y A/C FRT AUTO/AUX CONT (CJ2)	10248414	1	8.05	SENSOR, AMB AIR TEMP	4–I19,7

9.778 BOLT – CONNECTOR – RELAY, Rear Window Defogger

00–02	Y	25638301	1	3.35	BOLT, R/WDO DEFG GND (W/O SENSORS) (14.865)	
97–98	Y07	12102561	1	11.89	CONNECTOR, INLINE–TO R/WDO DEFG (1–WAY F, W/LEADS) (02.535) (AC–DELCO #PT230)	
98–02	Y67	12102561	1	11.89	CONNECTOR, INLINE–TO R/WDO DEFG (1–WAY F, W/LEADS) (02.535) (AC–DELCO #PT230)	
99–02	Y07 SPEAKER SYSTEM 6 (UZ6)	12167133	2	12.95	CONNECTOR, INLINE–TO R/WDO DEFG (1–WAY F) (W/LEADS) (M/P 630 SELF LK) (AC–DELCO #PT798)	6–C18,18
99–00	Y37 (EXC MULTIPLE CD PLYR (U1S)	12167133	2	12.95	CONNECTOR, INLINE–TO R/WDO DEFG (1–WAY F) (W/LEADS) (M/P 630 SELF LK) (AC–DELCO #PT798)	6–C18,18
01–02	YY37	12167133	1	12.95	CONNECTOR, INLINE–TO R/WDO DEFG (1–WAY F) (W/LEADS) (M/P 630 SELF LK) (AC–DELCO #PT798)	6–C18,18
97–02	Y	12193604	1	23.80	RELAY, R/WDO DEFG (GRAY) (SPST 280 MINI) (4–TERMINAL) (AC–DELCO #15–8733)	2–G10,41

cardiagn.com

9.779 DUCT – GRILLE – LINK – VALVE, Windshield Defroster

97–02	Y	10229414	1	6.40	DUCT, W/S DEFR NOZ	4–I19,4
97–02	Y A/C FRT AUTO/AUX CONT (CJ2)	10400366	1	16.10	GRILLE, W/S DEFR NOZ (BLACK)	4–I19,28
97–02	Y A/C MAN CONT (C60)	10400367	1	16.10	GRILLE, W/S DEFR NOZ (BLACK)	4–I19,28
97–02	Y	52469888	1	3.50	LINK, DEFR VLV (09.786)	4–I4,45
97–02	Y	52482269	1	6.67	VALVE, DEFR	4–I4,50

9.780 DUCT – RETAINER, Side Window Defroster

97–02	Y	10229415	LH	20.67	DUCT, SI WDO DEFG OTLT (INBOARD) (POSN #1)	4–I19,1
97–02	Y	10229416	RH	12.50	DUCT, SI WDO DEFG OTLT (INBOARD) (POSN #1)	4–I19,11
97–02	Y	10229417	LH	20.67	DUCT, SI WDO DEFG OTLT (OUTBOARD) (POSN #2)	4–I19,31
97–02	Y	10229418	RH	20.67	DUCT, SI WDO DEFG OTLT (OUTBOARD) (POSN #2)	4–I19,13
97–02	Y	20538173	RH	3.45	RETAINER, SI WDO DEFG OTLT DUCT (PUSH IN) (OUTBOARD) (POSN #2) (BLACK) (4.8 HOLE) (14.685)	4–I19,2
97–02	Y	20538173	LH	3.45	RETAINER, SI WDO DEFG OTLT DUCT (INBOARD–1, OUTBOARD–2) (BLACK) (4.8 HOLE) (14.685)	4–I19,2

9.782 INLET, Air Duct

97–99	Y	52493003	1	14.50	INLET, AIR (09.786)	4–I4,1
00–02	Y	52493003	1	14.50	INLET, AIR (09.786)	4–I4,1

9.784 VALVE, Air Inlet

97–02	Y	52487553	1	7.80	VALVE, AIR INL	4–I4,5

9.786 BRACKET – CASE – DUCT – STRAP – VALVE, Air Distributor

97	Y	52478143	1	10.00	BRACKET, MODE VLV SHF	4–I8,49
97	Y	52469863	1	8.37	CASE, AIR DISTR (09.211)	4–I4,53
99–02	Y	52482268	1	8.37	CASE, AIR DISTR	4–I4,53
97–02	Y	52470736	1	23.93	CASE, AUX HTR CORE (OTLT) (08.854)	4–I4,26
97–02	Y	10229412	1	45.57	DUCT, AIR DISTR	4–I19,29
01	YY07 6–WAY PWR P/SEAT ADJR (AG2), RECL FRT BKT ST, LUXURY (AQ9), IL3	15001540	3	3.33	STRAP, RDO FRT SPKR WIRE (BLACK) (34" LENGTH) (03.003)	
01–02	YY07 CONVENIENCE PKG (AAB), RECL FRT BKT ST, LUXURY (AQ9), IL3, T&T WHL (N37)	15001540	1	3.33	STRAP, RDO FRT SPKR WIRE (BLACK) (34" LENGTH) (03.003)	
99–00	Y	52482058	1	16.83	VALVE, MODE	4–I4,42
01–02	Y A/C MAN CONT (C60), A/C FRT AUTO/AUX CONT (CJ2)	52494489	1		VALVE, MODE	4–I4,42
99–02	Y	52469885	1	5.97	VALVE, VENT (09.280) (AC–DELCO #15–5580)	4–I4,41

9.988 LAMP, Rear Compartment Lamp

97–98	Y	10258647	2	8.35	LAMP, CARGO	2–H2,7
99–00	Y07–67	10258647	2	8.35	LAMP, CARGO	2–H2,7
99–00	Y37 LP GRP (TR9)	10258647	2	8.35	LAMP, CARGO	2–H2,7
01–02	Y	10258647	2	8.35	LAMP, CARGO	2–H2,7

cardiagn.com

1.263 FILLER – PANEL, Radiator

97–02	Y (EXC FRT FOG LP (T96)	10283577	LH	3.45	FILLER, F/END FASCIA
97–02	Y (EXC FRT FOG LP (T96)	10283578	RH	3.45	FILLER, F/END FASCIA
97–02	Y	10275465	LH	8.15	PANEL, F/END LWR OTR (LWR CLOSEOUT)
97–02	Y	10275466	RH	8.15	PANEL, F/END LWR OTR (LWR CLOSEOUT)

1.266 GRILLE, Radiator Grille

01–02	Y37	10424820	RH	63.75	GRILLE, RAD LWR (W/SCREEN)
01–02	Y37	10424821	LH	63.75	GRILLE, RAD LWR (W/SCREEN)

1.269 RETAINER, Radiator Grille

01	Y37	10224748	4	3.40	RETAINER, RAD LWR GRL (08.015)
01–02	Y37	10427824	4	.44	RETAINER, RAD LWR GRL (12.269)

1.272 DEFLECTOR – SPRING, Radiator Air

97–02	Y	10401458	1	49.25	DEFLECTOR, FRT AIR (AIR DAM CTR)
97	Y (2ND DES)	10401221	2	13.34	SPRING, FRT A/DFL (HOOK ON BOTH ENDS, FOR 1ST DES SEE 21030793) (07.833)
97	Y (1ST DES)	21030793	4	*1.03	SPRING, FRT A/DFL (HOOK ON ONE END, FOR 2ND DES SEE 10401221) (07.833)
98–02	Y	10401221	2	13.34	SPRING, FRT A/DFL (07.833)

2.188 BOLT – CONNECTOR – CYLINDER KIT – HOUSING – NUT – RETAINER – SPRING – SWITCH – TUMBLER, Ignition Switch

97	Y	26036497	3	3.38	BOLT, IGN LK CYL CASE (M5X.8X15) (PAN HD TORX TAP) (06.760)
98	Y (EXC STRG COL (NP7) (EXPORT)	26036497	3	3.38	BOLT, IGN LK CYL CASE (M5X.8X15) (PAN HD TORX TAP) (06.760)
99–02	Y	26036497	3	3.38	BOLT, IGN LK CYL CASE (M5X.8X15) (PAN HD TORX TAP) (06.760)
97	Y	26036496	1	3.33	BOLT, IGN SW (M4.55 TAP X15) (EXT TORX FLG HD)
97–02	Y	10404727	1	13.93	HOUSING, IGN & START SW
97	Y	10237960	2	.46	NUT, IGN & START SW (M6X1.0) (10.512)
98–02	Y	10410398	2	*.51	NUT, IGN & START SW (M6X1.0 ITR "D" THD) (10.512)
97–02	Y	10246848	1	63.26	SWITCH, IGN & START (AC–DELCO #D1499C)

2.195 CONNECTOR – LOCK – RELAY – RETAINER – SENSOR, Ignition Switch Warning, Lock, Headlamp, Theft Deterrent or Rear/Side Object

97–02	Y	26050960	1	162.68	LOCK, STRG WHL THEFT DTRNT

2.277 BOLT – BRACKET, Generator Mounting

97–02	Y	12556220	1	55.81	BRACKET, GEN & P/S PUMP
97	Y 6.7G (LS1)	12557330	1	16.65	BRACKET, GEN RR

2.333 BRACKET – INSULATOR – RETAINER – SHIELD – SUPPORT – TRAY, Battery

97–02	Y	10400530	1	18.35	SUPPORT, BAT TRAY
97–02	Y	10268430	1	5.70	TRAY, BAT (W/SUPT)

2.430 HARNESS – WIRE, Chassis Wiring

97–02	Y 4–S D A/TRANS (M30)	15320476	1	82.75	HARNESS, A/TRNS WRG (INCLS TCC SOL VLV) (AC–DELCO #15320476)
97–98	Y	12130416	1	131.58	HARNESS, F/PMP WRG

cardiagn.com

2.480 HARNESS – WIRE, Chassis Wiring(Con't)

99	Y	12189531	1	131.58	HARNESS, F/PMP WRG
00–02	Y	12189905	1		HARNESS, F/PMP WRG (HARN TO JMPR)
00–02	Y	12189906	1		HARNESS, F/PMP WRG (HARN JMPR TO FUEL TK)
97	Y FRT FOG LP (T96), (EXC SIG & MKR LP (T90) (EXPORT)	12189881	1	301.92	HARNESS, FWD LP WRG
97	Y (EXC FRT FOG LP (T96)	12189883	1	944.44	HARNESS, FWD LP WRG
98	Y FRT FOG LP (T96), (EXC FRT ABS BRAKE LOC (JAG), SIG & MKR LP (T90) (EXPORT)	12163322	1	301.92	HARNESS, FWD LP WRG
98	Y (EXC FRT ABS BRAKE LOC (JAG), FRT FOG LP (T96)	12163324	1	301.92	HARNESS, FWD LP WRG
98	Y FRT ABS BRAKE LOC (JAG), FRT FOG LP (T96), (EXC ACTIVE BRAKE CTL (JL4), SIG & MKR LP (T90) (EXPORT)	12189515	1	301.92	HARNESS, FWD LP WRG
98	Y FRT ABS BRAKE LOC (JAG), (EXC ACTIVE BRAKE CTL (JL4), FRT FOG LP (T96)	12189517	1	301.92	HARNESS, FWD LP WRG
98	Y FRT ABS BRAKE LOC (JAG), ACTIVE BRAKE CTL (JL4), FRT FOG LP (T96), (EXC SIG & MKR LP (T90) (EXPORT)	12189518	1	364.74	HARNESS, FWD LP WRG
98	Y FRT ABS BRAKE LOC (JAG), ACTIVE BRAKE CTL (JL4), (EXC FRT FOG LP (T96)	12189520	1	666.86	HARNESS, FWD LP WRG
98	Y ACTIVE BRAKE CTL (JL4), FRT FOG LP (T96), (EXC SIG & MKR LP (T90) (EXPORT)	12189976	1	290.29	HARNESS, FWD LP WRG
99	Y07–67 FRT FOG LP (T96), (EXC ACTIVE BRAKE CTL (JL4), SIG & MKR LP (T90) (EXPORT)	12189973	1	301.92	HARNESS, FWD LP WRG
99	Y07–67 (EXC ACTIVE BRAKE CTL (JL4), SIG & MKR LP (T90) (EXPORT), FRT FOG LP (T96)	12189974	1	301.92	HARNESS, FWD LP WRG
99	Y07–67 ACTIVE BRAKE CTL (JL4), (EXC SIG & MKR LP (T90) (EXPORT), FRT FOG LP (T96)	12189978	1	300.90	HARNESS, FWD LP WRG
99	Y37 FRT FOG LP (T96), (EXC ACTIVE BRAKE CTL (JL4)	12189973	1	301.92	HARNESS, FWD LP WRG
99	Y37 P/S (VARIABLE) (NV7), (EXC ACTIVE BRAKE CTL (JL4), FRT FOG LP (T96)	12189974	1	301.92	HARNESS, FWD LP WRG
00	Y ACTIVE BRAKE CTL (JL4), (EXC SIG & MKR LP (T90) (EXPORT)	15329406	1	290.29	HARNESS, FWD LP WRG
00	Y07–67 (EXC ACTIVE BRAKE CTL (JL4), SIG & MKR LP (T90) (EXPORT)	15329403	1	301.92	HARNESS, FWD LP WRG
00	Y37 (EXC ACTIVE BRAKE CTL (JL4)	15329403	1	301.92	HARNESS, FWD LP WRG
01	YY07–67 ACTIVE BRAKE CTL (JL4), (EXC SIG & MKR LP (T90) (EXPORT), (2ND DES)	10310796	1	296.53	HARNESS, FWD LP WRG (2ND DSN USED ON/AFTER VIN #15107689, (1ST DSN 10448116))
01	YY07–67 ACTIVE BRAKE CTL (JL4), SIG & MKR LP (T90) (EXPORT), (2ND DES)	10310798	1	300.90	HARNESS, FWD LP WRG (2ND DSN USED ON/AFTER VIN #15107689, (1ST DSN 10448118))
01	YY07–67 ACTIVE BRAKE CTL (JL4), (EXC SIG & MKR LP (T90) (EXPORT), (1ST DES)	10448116	1	296.53	HARNESS, FWD LP WRG (1ST DSN USED B/4 VIN #15107689, (2ND DSN 1031079:)

cardiagn.com

2.480 HARNESS – WIRE, Chassis Wiring(Con't)

01	YY07–67 ACTIVE BRAKE CTL (JL4), SIG & MKR LP (T90) (EXPORT), (1ST DES)	10448118	1	300.50	HARNESS, FWD LP WRG (1ST DSN USED P/4 VIN #15107689, (2ND DSN 10310798))
01–02	YY37	10310796	1	296.53	HARNESS, FWD LP WRG
01	YY37	10448116	1	296.53	HARNESS, FWD LP WRG
02	YY07–67 (EXC SIG & MKR LP (T90) (EXPORT)	10310796	1	296.53	HARNESS, FWD LP WRG
97–99	Y (EXC SIG & MKR LP (T90) (EXPORT)	12163711	1	40.09	HARNESS, FWD LP WRG HARN EXTN
00–02	Y (EXC SIG & MKR LP (T90) (EXPORT)	15329462	1	40.09	HARNESS, FWD LP WRG HARN EXTN
97–02	Y	12163776	1	80.84	HARNESS, HAZARD LP & T/SIG LP FLSHR WRG
97	Y 4–SPD A/TRANS (M30), A/C FRT AUTO/AUX CONT (CJ2), (EXC TAIL & S/LP (T89) (EXPORT), CANADIAN (Z49)	12189868	1	1548.75	HARNESS, I/P WRG
97	Y 4–SPD A/TRANS (M30), A/C MAN CONT (C60), (EXC TAIL & S/LP (T89) (EXPORT), CANADIAN (Z49)	12189869	1	1257.59	HARNESS, I/P WRG
97	Y 6–SPD M/TRANS (MM6), A/C FRT AUTO/AUX CONT (CJ2), (EXC TAIL & S/LP (T89) (EXPORT) CANADIAN (Z49)	12189870	1	1257.59	HARNESS, I/P WRG
97	Y 6–SPD M/TRANS (MM6), A/C MAN CONT (C60), (EXC TAIL & S/LP (T89) (EXPORT), CANADIAN (Z49)	12189871	1	1257.59	HARNESS, I/P WRG
97	Y 4–SPD A/TRANS (M30), A/C FRT AUTO/AUX CONT (CJ2), CANADIAN (Z49), (EXC TAIL & S/LP (T89) (EXPORT), SPECIAL TAIL & S/LP (T93)	12189874	1	1257.59	HARNESS, I/P WRG
97	Y 4–SPD A/TRANS (M30), A/C MAN CONT (C60), CANADIAN (Z49), (EXC TAIL & S/LP (T89) (EXPORT), SPECIAL TAIL & S/LP (T93)	12189875	1	1257.59	HARNESS, I/P WRG
97	Y 6–SPD M/TRANS (MM6), A/C FRT AUTO/AUX CONT (CJ2), CANADIAN (Z49), (EXC TAIL & S/LP (T89) (EXPORT), SPECIAL TAIL & S/LP (T93)	12189876	1	1257.59	HARNESS, I/P WRG
97	Y 6–SPD M/TRANS (MM6), A/C MAN CONT (C60), CANADIAN (Z49), (EXC TAIL & S/LP (T89) (EXPORT), SPECIAL TAIL & S/LP (T93)	12189877	1	1257.59	HARNESS, I/P WRG
98	Y 6–SPD M/TRANS (MM6), A/C MAN CONT (C60), (EXC FRT ABS BRAKE LOC (JAG), TAIL & S/LP (T89) (EXPORT), CANADIAN (Z49)	12189816	1	1257.59	HARNESS, I/P WRG
98	Y07 4–SPD A/TRANS (M30), A/C FRT AUTO/AUX CONT (CJ2), (EXC FRT ABS BRAKE LOC (JAG), TAIL & S/LP (T89) (EXPORT), CANADIAN (Z49)	12189813	1	1257.59	HARNESS, I/P WRG
98	Y07 4–SPD A/TRANS (M30), A/C MAN CONT (C60), (EXC FRT ABS BRAKE LOC (JAG), TAIL & S/LP (T89) (EXPORT), CANADIAN (Z49)	12189814	1	1467.60	HARNESS, I/P WRG

cardiagn.com

2.480 HARNESS – WIRE, Chassis Wiring(Con't)

98	Y07 6–SPD M/TRANS (MM6), A/C FRT AUTO/AUX CONT (CJ2), (EXC FRT ABS BRAKE LOC (JAG), TAIL & S/LP (T89) (EXPORT), CANADIAN (Z49)	12189815	1	1595.21	HARNESS, I/P WRG
98	Y07 4–SPD A/TRANS (M30), A/C FRT AUTO/AUX CONT (CJ2), CANADIAN (Z49), (EXC FRT ABS BRAKE LOC (JAG), TAIL & S/LP (T89) (EXPORT), SPECIAL TAIL & S/LP (T93)	12189819	1	1257.59	HARNESS, I/P WRG
98	Y07 4–SPD A/TRANS (M30), A/C MAN CONT (C60), CANADIAN (Z49), (EXC FRT ABS BRAKE LOC (JAG), TAIL & S/LP (T89) (EXPORT), SPECIAL TAIL & S/LP (T93)	12189820	1	1257.59	HARNESS, I/P WRG
98	Y07 6–SPD M/TRANS (MM6), A/C FRT AUTO/AUX CONT (CJ2), CANADIAN (Z49), (EXC FRT ABS BRAKE LOC (JAG), TAIL & S/LP (T89) (EXPORT), SPECIAL TAIL & S/LP (T93)	12189821	1	1257.59	HARNESS, I/P WRG
98	Y07 6–SPD M/TRANS (MM6), A/C MAN CONT (C60), CANADIAN (Z49), (EXC FRT ABS BRAKE LOC (JAG), TAIL & S/LP (T89) (EXPORT), SPECIAL TAIL & S/LP (T93)	12189822	1	1257.59	HARNESS, I/P WRG
98	Y07 4–SPD A/TRANS (M30), A/C FRT AUTO/AUX CONT (CJ2), ACTIVE BRAKE CTL (JL4), FRT ABS BRAKE LOC (JAG), (EXC TAIL & S/LP (T89) (EXPORT), CANADIAN (Z49)	12190400	1	1233.23	HARNESS, I/P WRG (MUST BE USED W/BODY CONT MDL LABELED 9359821 FOR 1998)
98	Y07 4–SPD A/TRANS (M30), A/C MAN CONT (C60), ACTIVE BRAKE CTL (JL4), FRT ABS BRAKE LOC (JAG), (EXC TAIL & S/LP (T89) (EXPORT), CANADIAN (Z49)	12190401	1	1233.23	HARNESS, I/P WRG (MUST BE USED W/BODY CONT MDL LABELED 9359821 FOR 1998)
98	Y07 6–SPD M/TRANS (MM6), A/C FRT AUTO/AUX CONT (CJ2), ACTIVE BRAKE CTL (JL4), FRT ABS BRAKE LOC (JAG), (EXC TAIL & S/LP (T89) (EXPORT), CANADIAN (Z49)	12190402	1	1233.23	HARNESS, I/P WRG (MUST BE USED W/BODY CONT MDL LABELED 9359821 FOR 1998)
98	Y07 6–SPD M/TRANS (MM6), A/C MAN CONT (C60), ACTIVE BRAKE CTL (JL4), FRT ABS BRAKE LOC (JAG), (EXC TAIL & S/LP (T89) (EXPORT), CANADIAN (Z49)	12190403	1	1233.23	HARNESS, I/P WRG (MUST BE USED W/BODY CONT MDL LABELED 9359821 FOR 1998)
98	Y07 4–SPD A/TRANS (M30), A/C FRT AUTO/AUX CONT (CJ2), FRT ABS BRAKE LOC (JAG), ACTIVE BRAKE CTL (JL4), CANADIAN (Z49), (EXC TAIL & S/LP (T89) (EXPORT), SPECIAL TAIL & S/LP (T93)	12190406	1	1233.23	HARNESS, I/P WRG (MUST BE USED W/BODY CONT MDL LABELED 9359821 FOR 1998)

cardiagn.com

2.480 HARNESS – WIRE, Chassis Wiring(Con't)

98	Y07 4–SPD A/TRANS (M30), A/C MAN CONT (C60), FRT ABS BRAKE LOC (JAG), ACTIVE BRAKE CTL (JL4), CANADIAN (Z49), (EXC TAIL & S/LP (T89) (EXPORT), SPECIAL TAIL & S/LP (T93)	12190407	1	1233.23	HARNESS, I/P WRG (MUST BE USED W/BODY CONT MDL LABELED 9359821 FOR 1998) .....
98	Y07 6–SPD M/TRANS (MM6), A/C FRT AUTO/AUX CONT (CJ2), FRT ABS BRAKE LOC (JAG), ACTIVE BRAKE CTL (JL4), CANADIAN (Z49), (EXC TAIL & S/LP (T89) (EXPORT), SPECIAL TAIL & S/LP (T93)	12190408	1	1233.23	HARNESS, I/P WRG (MUST BE USED W/BODY CONT MDL LABELED 9359821 FOR 1998) .....
98	Y07 6–SPD M/TRANS (MM6), A/C MAN CONT (C60), FRT ABS BRAKE LOC (JAG), ACTIVE BRAKE CTL (JL4), CANADIAN (Z49), (EXC TAIL & S/LP (T89) (EXPORT), SPECIAL TAIL & S/LP (T93)	12190409	1	1233.23	HARNESS, I/P WRG (MUST BE USED W/BODY CONT MDL LABELED 9359821 FOR 1998) .....
98	Y07 4–SPD A/TRANS (M30), A/C FRT AUTO/AUX CONT (CJ2), FRT ABS BRAKE LOC (JAG), (EXC ACTIVE BRAKE CTL (JL4), TAIL & S/LP (T89) (EXPORT), CANADIAN (Z49)	12190412	1	1233.23	HARNESS, I/P WRG (MUST BE USED W/BODY CONT MDL LABELED 9359821 FOR 1998) .....
98	Y07 4–SPD A/TRANS (M30), A/C MAN CONT (C60), FRT ABS BRAKE LOC (JAG), (EXC ACTIVE BRAKE CTL (JL4), TAIL & S/LP (T89) (EXPORT), CANADIAN (Z49)	12190413	1	1233.23	HARNESS, I/P WRG (MUST BE USED W/BODY CONT MDL LABELED 9359821 FOR 1998) .....
98	Y07 6–SPD M/TRANS (MM6), A/C FRT AUTO/AUX CONT (CJ2), FRT ABS BRAKE LOC (JAG), (EXC ACTIVE BRAKE CTL (JL4), TAIL & S/LP (T89) (EXPORT), CANADIAN (Z49)	12190414	1	1233.23	HARNESS, I/P WRG (MUST BE USED W/BODY CONT MDL LABELED 9359821 FOR 1998) .....
98	Y07 6–SPD M/TRANS (MM6), A/C MAN CONT (C60), FRT ABS BRAKE LOC (JAG), (EXC ACTIVE BRAKE CTL (JL4), TAIL & S/LP (T89) (EXPORT), CANADIAN (Z49)	12190415	1	1233.23	HARNESS, I/P WRG (MUST BE USED W/BODY CONT MDL LABELED 9359821 FOR 1998) .....
98	Y07 4–SPD A/TRANS (M30), A/C FRT AUTO/AUX CONT (CJ2), FRT ABS BRAKE LOC (JAG), CANADIAN (Z49), (EXC ACTIVE BRAKE CTL (JL4), TAIL & S/LP (T89) (EXPORT), SPECIAL TAIL & S/LP (T93)	12190418	1	1233.23	HARNESS, I/P WRG (MUST BE USED W/BODY CONT MDL LABELED 9359821 FOR 1998) .....
98	Y07 4–SPD A/TRANS (M30), A/C MAN CONT (C60), FRT ABS BRAKE LOC (JAG), CANADIAN (Z49), (EXC ACTIVE BRAKE CTL (JL4), TAIL & S/LP (T89) (EXPORT), SPECIAL TAIL & S/LP (T93)	12190419	1	1233.23	HARNESS, I/P WRG (MUST BE USED W/BODY CONT MDL LABELED 9359821 FOR 1998) .....
98	Y07 6–SPD M/TRANS (MM6), A/C FRT AUTO/AUX CONT (CJ2), FRT ABS BRAKE LOC (JAG), CANADIAN (Z49), (EXC ACTIVE BRAKE CTL (JL4), TAIL & S/LP (T89) (EXPORT), SPECIAL TAIL & S/LP (T93)	12190420	1	1233.23	HARNESS, I/P WRG (MUST BE USED W/BODY CONT MDL LABELED 9359821 FOR 1998) .....

cardiagn.com

2.480 HARNESS – WIRE, Chassis Wiring(Con't)

98	Y67 4–SPD A/TRANS (M30), A/C MAN CONT (C60), FRT ABS BRAKE LOC (JAG), (EXC TAIL & S/LP (T89) (EXPORT), CANADIAN (Z49)	12189982	1	1233.23	HARNESS, I/P WRG (MUST BE USED W/BODY CONT MDL LABELED 9359821 FOR 1998)
98	Y67 6–SPD M/TRANS (MM6), A/C MAN CONT (C60), FRT ABS BRAKE LOC (JAG), (EXC TAIL & S/LP (T89) (EXPORT), CANADIAN (Z49)	12189983	1	1233.23	HARNESS, I/P WRG (MUST BE USED W/BODY CONT MDL LABELED 9359821 FOR 1998)
98	Y67 4–SPD A/TRANS (M30), A/C FRT AUTO/AUX CONT (CJ2), CANADIAN (Z49), FRT ABS BRAKE LOC (JAG), (EXC TAIL & S/LP (T89) (EXPORT)	12189984	1	1233.23	HARNESS, I/P WRG (MUST BE USED W/BODY CONT MDL LABELED 9359821 FOR 1998)
98	Y67 4–SPD A/TRANS (M30), A/C MAN CONT (C60), CANADIAN (Z49), FRT ABS BRAKE LOC (JAG), (EXC TAIL & S/LP (T89) (EXPORT)	12189985	1	1233.23	HARNESS, I/P WRG (MUST BE USED W/BODY CONT MDL LABELED 9359821 FOR 1998)
98	Y67 6–SPD M/TRANS (MM6), A/C FRT AUTO/AUX CONT (CJ2), FRT ABS BRAKE LOC (JAG), CANADIAN (Z49), (EXC TAIL & S/LP (T89) (EXPORT)	12189986	1	1233.23	HARNESS, I/P WRG (MUST BE USED W/BODY CONT MDL LABELED 9359821 FOR 1998)
98	Y67 6–SPD M/TRANS (MM6), A/C MAN CONT (C60), CANADIAN (Z49), FRT ABS BRAKE LOC (JAG), (EXC TAIL & S/LP (T89) (EXPORT)	12189987	1	1233.23	HARNESS, I/P WRG (MUST BE USED W/BODY CONT MDL LABELED 9359821 FOR 1998)
99	Y07 4–SPD A/TRANS (M30), A/C FRT AUTO/AUX CONT (CJ2), ACTIVE BRAKE CTL (JL4), (EXC T&T WHL (N37), TAIL & S/LP (T89) (EXPORT)	12190424	1	1233.23	HARNESS, I/P WRG (MAY REQUIRE 12450028 I/P COMPT LP & 12102616 PWR RCPT CONN)
99–00	Y07 4–SPD A/TRANS (M30), A/C FRT AUTO/AUX CONT (CJ2), ACTIVE BRAKE CTL (JL4), T&T WHL (N37), (EXC TAIL & S/LP (T89) (EXPORT)	12190424	1	1233.23	HARNESS, I/P WRG (MAY REQUIRE 12450028 I/P COMPT LP & 12102616 PWR RCPT CONN)
99–00	Y07 4–SPD A/TRANS (M30), A/C MAN CONT (C60), ACTIVE BRAKE CTL (JL4), (EXC T&T WHL (N37), TAIL & S/LP (T89) (EXPORT)	12190427	1	1233.23	HARNESS, I/P WRG (MAY REQUIRE 12450028 I/P COMPT LP & 12102616 PWR RCPT CONN)
99	Y07 6–SPD M/TRANS (MM6), A/C FRT AUTO/AUX CONT (CJ2), ACTIVE BRAKE CTL (JL4), T&T WHL (N37), (EXC TAIL & S/LP (T89) (EXPORT)	12190429	1	1233.23	HARNESS, I/P WRG (MAY REQUIRE 12450028 I/P COMPT LP & 12102616 PWR RCPT CONN)
99–00	Y07 6–SPD M/TRANS (MM6), A/C MAN CONT (C60), ACTIVE BRAKE CTL (JL4), (EXC T&T WHL (N37), TAIL & S/LP (T89) (EXPORT)	12190432	1	1233.23	HARNESS, I/P WRG (MAY REQUIRE 12450028 I/P COMPT LP & 12102616 PWR RCPT CONN)
99–00	Y07 4–SPD A/TRANS (M30), A/C FRT AUTO/AUX CONT (CJ2), T&T WHL (N37), (EXC ACTIVE BRAKE CTL (JL4), TAIL & S/LP (T89) (EXPORT)	12190434	1	1233.23	HARNESS, I/P WRG (MAY REQUIRE 12450028 I/P COMPT LP & 12102616 PWR RCPT CONN)
99–00	Y07 4–SPD A/TRANS (M30), A/C MAN CONT (C60), (EXC ACTIVE BRAKE CTL (JL4), T&T WHL (N37), TAIL & S/LP (T89) (EXPORT)	12190437	1	1233.23	HARNESS, I/P WRG (MAY REQUIRE 12450028 I/P COMPT LP & 12102616 PWR RCPT CONN)

cardiagn.com

2.480 HARNESS – WIRE, Chassis Wiring(Con't)

99–00	Y07 6–SPD M/TRANS (MM6), A/C FRT AUTO/AUX CONT (CJ2), T&T WHL (N37), (EXC ACTIVE BRAKE CTL (JL4), TAIL & S/LP (T89) (EXPORT)	12190439	1	1233.23	HARNESS, I/P WRG (MAY REQUIRE 12450028 I/P COMPT LP & 12102616 PWR RCPT CONN) .....
99–00	Y07 6–SPD M/TRANS (MM6), A/C MAN CONT (C60), (EXC ACTIVE BRAKE CTL (JL4), T&T WHL (N37), TAIL & S/LP (T89) (EXPORT)	12190442	1	1233.23	HARNESS, I/P WRG (MAY REQUIRE 12450028 I/P COMPT LP & 12102616 PWR RCPT CONN) .....
99–00	Y37 4–SPD A/TRANS (M30), 4 SPKR SYS (UQ5), (EXC ACTIVE BRAKE CTL (JL4)	15329320	1	1233.23	HARNESS, I/P WRG (MAY REQUIRE 12450028 I/P COMPT LP & 12102616 PWR RCPT CONN) .....
99–00	Y37 4–SPD A/TRANS (M30), SPEAKER SYSTEM 6 (UZ6), (EXC ACTIVE BRAKE CTL (JL4)	15329321	1	1233.23	HARNESS, I/P WRG (MAY REQUIRE 12450028 I/P COMPT LP & 12102616 PWR RCPT CONN) .....
99–00	Y37 6–SPD M/TRANS (MM6), 4 SPKR SYS (UQ5), (EXC ACTIVE BRAKE CTL (JL4)	15329322	1	1233.23	HARNESS, I/P WRG (MAY REQUIRE 12450028 I/P COMPT LP & 12102616 PWR RCPT CONN) .....
99–00	Y37 6–SPD M/TRANS (MM6), SPEAKER SYSTEM 6 (UZ6), (EXC ACTIVE BRAKE CTL (JL4)	15329323	1	1233.23	HARNESS, I/P WRG (MAY REQUIRE 12450028 I/P COMPT LP & 12102616 PWR RCPT CONN) .....
99	Y37 6–SPD M/TRANS (MM6), A/C MAN CONT (C60), ACTIVE BRAKE CTL (JL4), 4 SPKR SYS (UQ5)	15329332	1	1208.87	HARNESS, I/P WRG .....
99	Y37 6–SPD M/TRANS (MM6), A/C MAN CONT (C60), ACTIVE BRAKE CTL (JL4), SPEAKER SYSTEM 6 (UZ6)	15329333	1	1208.87	HARNESS, I/P WRG .....
99–00	Y67 4–SPD A/TRANS (M30), A/C FRT AUTO/AUX CONT (CJ2), T&T WHL (N37), (EXC TAIL & S/LP (T89) (EXPORT)	12190444	1	1233.23	HARNESS, I/P WRG (MAY REQUIRE 12450028 I/P COMPT LP & 12102616 PWR RCPT CONN) .....
99–00	Y67 4–SPD A/TRANS (M30), A/C MAN CONT (C60), (EXC T&T WHL (N37), TAIL & S/LP (T89) (EXPORT)	12190447	1	1233.23	HARNESS, I/P WRG (MAY REQUIRE 12450028 I/P COMPT LP & 12102616 PWR RCPT CONN) .....
99–00	Y67 6–SPD M/TRANS (MM6), A/C FRT AUTO/AUX CONT (CJ2), T&T WHL (N37), (EXC TAIL & S/LP (T89) (EXPORT)	12190449	1	1233.23	HARNESS, I/P WRG (MAY REQUIRE 12450028 I/P COMPT LP & 12102616 PWR RCPT CONN) .....
99–00	Y67 6–SPD M/TRANS (MM6) A/C MAN CONT (C60), (EXC T&T WHL (N37), TAIL & S/LP (T89) (EXPORT)	12190452	1	1233.23	HARNESS, I/P WRG (MAY REQUIRE 12450028 I/P COMPT LP & 12102616 PWR RCPT CONN) .....
00	YY07 6–SPD M/TRANS (MM6), A/C FRT AUTO/AUX CONT (CJ2), (EXC ACTIVE BRAKE CTL (JL4), T&T WHL (N37), TAIL & S/LP (T89) (EXPORT)	10442572	1	1233.23	HARNESS, I/P WRG .....
00	Y07 4–SPD A/TRANS (M30), A/C FRT AUTO/AUX CONT (CJ2), ACTIVE BRAKE CTL (JL4), T&T WHL (N37), (EXC TAIL & S/LP (T89) (EXPORT)	10442559	1	1233.23	HARNESS, I/P WRG (INCLUDES PROVISIONS FOR MAN. SUPPRESSION SYS. INCLUDES HARN. INLINE P/DOOR) .....
00	Y07 4–SPD A/TRANS (M30), A/C MAN CONT (C60), ACTIVE BRAKE CTL (JL4), (EXC T&T WHL (N37), TAIL & S/LP (T89) (EXPORT)	10442562	1	1233.23	HARNESS, I/P WRG (INCLUDES PROVISIONS FOR MAN. SUPPRESSION SYS. INCLUDES HARN. INLINE P/DOOR) .....
00	Y07 6–SPD M/TRANS (MM6), A/C FRT AUTO/AUX CONT (CJ2), ACTIVE BRAKE CTL (JL4), (EXC TAIL & S/LP (T89) (EXPORT)	10442563	1	1233.23	HARNESS, I/P WRG (INCLUDES PROVISIONS FOR MAN. SUPPRESSION SYS. INCLUDES HARN. INLINE P/DOOR) .....

cardiagn.com

2.480 HARNESS – WIRE, Chassis Wiring(Con't)

00	Y07 6–SPD M/TRANS (MM6), A/C MAN CONT (C60), ACTIVE BRAKE CTL (JL4), (EXC T&T WHL (N37) ..	10442566	1	1233.23	HARNESS, I/P WRG (INCLUDES PROVISIONS FOR MAN. SUPPRESSION SYS. INCLUDES HARN.INLINE P/DOOR) .....
00	Y07 4–SPD A/TRANS (M30), A/C FRT AUTO/AUX CONT (CJ2), (EXC ACTIVE BRAKE CTL (JL4), TAIL & S/LP (T89) (EXPORT)	10442567	1	1233.23	HARNESS, I/P WRG (INCLUDES PROVISIONS FOR MAN. SUPPRESSION SYS. INCLUDES HARN.INLINE P/DOOR) .....
00	Y07 4–SPD A/TRANS (M30), A/C MAN CONT (C60), (EXC ACTIVE BRAKE CTL (JL4), T&T WHL (N37)	10442570	1	1233.23	HARNESS, I/P WRG (INCLUDES PROVISIONS FOR MAN. SUPPRESSION SYS INCLUDES HARN.INLINE P/DOOR) .....
00	Y07 6- SPD M/TRANS (MM6), A/C FRT AUTO/AUX CONT (CJ2), (EXC ACTIVE BRAKE CTL (JL4), TAIL & S/LP (T89) (EXPORT)	10442571	1	1233.23	HARNESS, I/P WRG (INCLUDES PROVISIONS FOR MAN. SUPPRESSION SYS. INCLUDES HARN.INLINE P/DOOR) .....
00	Y07 6–SPD M/TRANS (MM6), A/C MAN CONT (C60), (EXC ACTIVE BRAKE CTL (JL4), T&T WHL (N37)	10442574	1	1233.23	HARNESS, I/P WRG (INCLUDES PROVISIONS FOR MAN. SUPPRESSION SYS. INCLUDES HARN.INLINE P/DOOR) .....
00	Y37 4–SPD A/TRANS (M30), A/C FRT AUTO/AUX CONT (CJ2), (EXC T&T WHL (N37), TAIL & S/LP (T89) (EXPORT)	10442575	1	1233.23	HARNESS, I/P WRG (INCLUDES PROVISIONS FOR MAN. SUPPRESSION SYS. INCLUDES HARN.INLINE P/DOOR) .....
00	Y37 6–SPD M/TRANS (MM6), A/C FRT AUTO/AUX CONT (CJ2), (EXC T&T WHL (N37), TAIL & S/LP (T89) (EXPORT)	10442579	1	1233.23	HARNESS, I/P WRG (INCLUDES PROVISIONS FOR MAN. SUPPRESSION SYS. INCLUDES HARN.INLINE P/DOOR) .....
00	Y37 6–SPD M/TRANS (MM6), A/C MAN CONT (C60), SPEAKER SYSTEM 6 (UZ6), (EXC ACTIVE BRAKE CTL (JL4)	10442582	1	1233.23	HARNESS, I/P WRG (INCLUDES PROVISIONS FOR MAN. SUPPRESSION SYS. INCLUDES HARN.INLINE P/DOOR) .....
00	Y37 6–SPD M/TRANS (MM6), A/C MAN CONT (C60), 4 SPKR SYS (UQ5), (EXC ACTIVE BRAKE CTL (JL4)	10442583	1	1233.23	HARNESS, I/P WRG (INCLUDES PROVISIONS FOR MAN. SUPPRESSION SYS. INCLUDES HARN.INLINE P/DOOR) .....
00	Y37 6–SPD M/TRANS (MM6), A/C MAN CONT (C60), ACTIVE BRAKE CTL (JL4), 4 SPKR SYS (UQ5)	10442585	1	1233.23	HARNESS, I/P WRG (INCLUDES PROVISIONS FOR MAN. SUPPRESSION SYS. INCLUDES HARN.INLINE P/DOOR) .....
00	Y37 6–SPD M/TRANS (MM6), A/C MAN CONT (C60), ACTIVE BRAKE CTL (JL4), SPEAKER SYSTEM 6 (UZ6)	10442586	1	1233.23	HARNESS, I/P WRG (INCLUDES PROVISIONS FOR MAN. SUPPRESSION SYS. INCLUDES HARN.INLINE P/DOOR) .....
00	Y67 4–SPD A/TRANS (M30), A/C FRT AUTO/AUX CONT (CJ2) (EXC TAIL & S/LP (T89) (EXPORT)	10442575	1	1233.23	HARNESS, I/P WRG (INCLUDES PROVISIONS FOR MAN. SUPPRESSION SYS. INCLUDES HARN.INLINE P/DOOR) .....
00	Y67 4–SPD A/TRANS (M30), A/C MAN CONT (C60), (EXC T&T WHL (N37)	10442578	1	1233.23	HARNESS, I/P WRG (INCLUDES PROVISIONS FOR MAN. SUPPRESSION SYS. INCLUDES HARN.INLINE P/DOOR) .....
00	Y67 6–SPD M/TRANS (MM6), A/C MAN CONT (C60), (EXC T&T WHL (N37)	10442582	1	1233.23	HARNESS, I/P WRG (INCLUDES PROVISIONS FOR MAN. SUPPRESSION SYS. INCLUDES HARN.INLINE P/DOOR) .....
01–02	Y37 A/C FRT AUTO/AUX CONT (CJ2)	10310789	1	1233.23	HARNESS, I/P WRG .....
01	YY67 6–SPD M/TRANS (MM6), A/C MAN CONT (C60), (EXC T&T WHL (N37), (2ND DES)	10310790	1	1233.23	HARNESS, I/P WRG (2ND DSN USED ON/AFTER VIN #15107689, (1ST DSN 10448106)) .....

cardiagn.com

2.480 HARNESS – WIRE, Chassis Wiring(Con't)

01	Y07 4–SPD A/TRANS (M30), A/C FRT AUTO/AUX CONT (CJ2), ACTIVE BRAKE CTL (JL4), (EXC TAIL & S/LP (T89) (EXPORT)	10310779	1	1233.23	HARNESS, I/P WRG .....
01	Y07 4–SPD A/TRANS (M30), A/C MAN CONT (C60), ACTIVE BRAKE CTL (JL4), (EXC T&T WHL (N37), (2ND DES)	10310780	1	1233.23	HARNESS, I/P WRG (2ND DSN USED ON/AFTER VIN #15107689, (1ST DSN 10448088)) .....
01	Y07 6–SPD M/TRANS (MM6), A/C FRT AUTO/AUX CONT (CJ2), ACTIVE BRAKE CTL (JL4), (EXC TAIL & S/LP (T89) (EXPORT), (2ND DES)	10310781	1	1233.23	HARNESS, I/P WRG (2ND DSN USED ON/AFTER VIN #15107689, (1ST DSN 10448089)) .....
01	Y07 6–SPD M/TRANS (MM6), A/C MAN CONT (C60), ACTIVE BRAKE CTL (JL4), (EXC T&T WHL (N37), (2ND DES)	10310782	1	1233.23	HARNESS, I/P WRG (2ND DSN USED ON/AFTER VIN #15107689, (1ST DSN 10448090)) .....
01	Y07 4–SPD A/TRANS (M30), A/C FRT AUTO/AUX CONT (CJ2), ACTIVE BRAKE CTL (JL4), (EXC T&T WHL (N37), TAIL & S/LP (T89) (EXPORT), (1ST DES)	10448087	1	1233.23	HARNESS, I/P WRG (1ST DSN USED B/4 VIN #15107689, (2ND DSN 10310779)) .....
01	Y07 4–SPD A/TRANS (M30), A/C MAN CONT (C60), ACTIVE BRAKE CTL (JL4), (EXC T&T WHL (N37), (1ST DES)	10448088	1	1233.23	HARNESS, I/P WRG (1ST DSN USED B/4 VIN #15107689, (2ND DSN 10310780)) .....
01	Y07 6–SPD M/TRANS (MM6), A/C FRT AUTO/AUX CONT (CJ2), ACTIVE BRAKE CTL (JL4), T&T WHL (N37), (EXC TAIL & S/LP (T89) (EXPORT), (1ST DES)	10448089	1	1233.23	HARNESS, I/P WRG (1ST DSN USED B/4 VIN #15107689, (2ND DSN 10310781)) .....
01	Y07 6–SPD M/TRANS (MM6), A/C MAN CONT (C60), ACTIVE BRAKE CTL (JL4), (EXC T&T WHL (N37), (1ST DES)	10448090	1	1233.23	HARNESS, I/P WRG (1ST DSN USED B/4 VIN #15107689, (2ND DSN 10310782)) .....
01	Y37 A/C FRT AUTO/AUX CONT (CJ2)	10448105	1	1233.23	HARNESS, I/P WRG .....
01	Y67 4–SPD A/TRANS (M30), A/C FRT AUTO/AUX CONT (CJ2), (EXC TAIL & S/LP (T89) (EXPORT), (2ND DES)	10310787	1	1233.23	HARNESS, I/P WRG (2ND DSN USED ON/AFTER VIN #15107689, (1ST DSN 10448103)) .....
01	Y67 4–SPD A/TRANS (M30), A/C MAN CONT (C60), (EXC T&T WHL (N37), (2ND DES)	10310788	1	1233.23	HARNESS, I/P WRG (2ND DSN USED ON/AFTER VIN #15107689, (1ST DSN 10448104)) .....
01	Y67 6–SPD M/TRANS (MM6), A/C FRT AUTO/AUX CONT (CJ2), (EXC TAIL & S/LP (T89) (EXPORT), (2ND DES)	10310789	1	1233.23	HARNESS, I/P WRG (2ND DSN USED ON/AFTER VIN #15107689, (1ST DSN 10448105)) .....
01	Y67 4–SPD A/TRANS (M30), A/C FRT AUTO/AUX CONT (CJ2), T&T WHL (N37), (EXC TAIL & S/LP (T89) (EXPORT), (1ST DES)	10448103	1	1233.23	HARNESS, I/P WRG (1ST DSN USED B/4 VIN #15107689, (2ND DSN 10310787)) .....
01	Y67 4–SPD A/TRANS (M30), A/C MAN CONT (C60), (EXC T&T WHL (N37), (1ST DES)	10448104	1	1233.23	HARNESS, I/P WRG (1ST DSN USED B/4 VIN #15107689, (2ND DSN 10310788)) .....
01	Y67 6–SPD M/TRANS (MM6), A/C FRT AUTO/AUX CONT (CJ2), T&T WHL (N37), (EXC TAIL & S/LP (T89) (EXPORT), (1ST DES)	10448105	1	1233.23	HARNESS, I/P WRG (1ST DSN USED B/4 VIN #15107689, (2ND DSN 10310789)) .....
01	Y67 6–SPD M/TRANS (MM6), A/C MAN CONT (C60), (EXC T&T WHL (N37), (1ST DES)	10448106	1	1233.23	HARNESS, I/P WRG (1ST DSN USED B/4 VIN #15107689, (2ND DSN 10310790)) .....

cardiagn.com

2.480 HARNESS – WIRE, Chassis Wiring(Con't)

02	YY07 4–SPD A/TRANS (M30), A/C FRT AUTO/AUX CONT (CJ2), (EXC TAIL & S/LP (T89) (EXPORT)	10310779	1	1233.23	HARNESS, I/P WRG .....
02	YY07 4–SPD A/TRANS (M30), A/C MAN CONT (C60), (EXC T&T WHL (N37)	10310780	1	1233.23	HARNESS, I/P WRG .....
02	YY67 4–SPD A/TRANS (M30), A/C MAN CONT (C60), (EXC T&T WHL (N37)	10310788	1	1233.23	HARNESS, I/P WRG .....
02	YY67 6–SPD M/TRANS (MM6), A/C MAN CONT (C60), (EXC T&T WHL (N37)	10310790	1	1233.23	HARNESS, I/P WRG .....
02	Y07 6–SPD M/TRANS (MM6), A/C FRT AUTO/AUX CONT (CJ2), (EXC TAIL & S/LP (T89) (EXPORT)	10310781	1	1233.23	HARNESS, I/P WRG .....
02	Y07 6–SPD M/TRANS (MM6), A/C MAN CONT (C60), (EXC T&T WHL (N37)	10310782	1	1233.23	HARNESS, I/P WRG .....
02	Y67 4–SPD A/TRANS (M30), A/C FRT AUTO/AUX CONT (CJ2), (EXC TAIL & S/LP (T89) (EXPORT)	10310787	1	1233.23	HARNESS, I/P WRG .....
02	Y67 6–SPD M/TRANS (MM6), A/C FRT AUTO/AUX CONT (CJ2), (EXC TAIL & S/LP (T89) (EXPORT)	10310789	1	1233.23	HARNESS, I/P WRG .....
97	Y 4–SPD A/TRANS (M30), (EXC CHASSIS, REALTIME DAMPING (F45)	12163135	1	375.00	HARNESS, TRANS WRG (AC–DELCO #12163195) .....
97	Y 6–SPD M/TRANS (MM6), (EXC CHASSIS, REALTIME DAMPING (F45)	12163196	1	375.00	HARNESS, TRANS WRG (AC–DELCO #12163196) .....
97	Y 4–SPD A/TRANS (M30), CHASSIS, REALTIME DAMPING (F45)	12163705	1	628.00	HARNESS, TRANS WRG (AC–DELCO #12163705) .....
97	Y 6–SPD M/TRANS (MM6), CHASSIS, REALTIME DAMPING (F45)	12163706	1	628.00	HARNESS, TRANS WRG (AC–DELCO #12163706) .....
98	Y 4–SPD A/TRANS (M30), (EXC CHASSIS, REALTIME DAMPING (F45), FRT ABS BRAKE LOC (JAG)	12163195	1	375.00	HARNESS, TRANS WRG (AC–DELCO #12163195) .....
98	Y 6–SPD M/TRANS (MM6), (EXC CHASSIS, REALTIME DAMPING (F45), FRT ABS BRAKE LOC (JAG), EUROPEAN PROVISIONS (VD1) (EXPORT)	12163196	1	375.00	HARNESS, TRANS WRG (AC–DELCO #12163196) .....
98	Y 4–SPD A/TRANS (M30), CHASSIS, REALTIME DAMPING (F45), (EXC FRT ABS BRAKE LOC (JAG)	12163705	1	628.00	HARNESS, TRANS WRG (AC–DELCO #12163705) .....
98	Y 6–SPD M/TRANS (MM6), CHASSIS, REALTIME DAMPING (F45), (EXC FRT ABS BRAKE LOC (JAG), EUROPEAN PROVISIONS (VD1) (EXPORT)	12163706	1	628.00	HARNESS, TRANS WRG (AC–DELCO #12163706) .....
98	Y 4–SPD A/TRANS (M30), FRT ABS BRAKE LOC (JAG), (EXC CHASSIS, REALTIME DAMPING (F45)	12163790	1	367.43	HARNESS, TRANS WRG .....
98	Y 6–SPD M/TRANS (MM6), FRT ABS BRAKE LOC (JAG), (EXC CHASSIS, REALTIME DAMPING (F45), EUROPEAN PROVISIONS (VD1) (EXPORT)	12163791	1	367.43	HARNESS, TRANS WRG .....

cardiagn.com

2.480 HARNESS – WIRE, Chassis Wiring(Con't)

98	Y 4–SPD A/TRANS (M30), CHASSIS, REALTIME DAMPING (F45), FRT ABS BRAKE LOC (JAG)	12163792	1	367.43	HARNESS, TRANS WRG
98	Y 6–SPD M/TRANS (MM6), CHASSIS, REALTIME DAMPING (F45), FRT ABS BRAKE LOC (JAG), (EXC EUROPEAN PROVISIONS (VD1) (EXPORT)	12163793	1	367.43	HARNESS, TRANS WRG
99–00	Y 4–SPD A/TRANS (M30), (EXC CHASSIS, REALTIME DAMPING (F45)	12189826	1	248.00	HARNESS, TRANS WRG (AC–DELCO #12189826)
99–00	Y 6–SPD M/TRANS (MM6), (EXC CHASSIS, REALTIME DAMPING (F45), EUROPEAN PROVISIONS (VD1) (EXPORT)	12189827	1	201.00	HARNESS, TRANS WRG (AC–DELCO #12189827)
99–00	Y 4–SPD A/TRANS (M30), CHASSIS, REALTIME DAMPING (F45)	12189828	1	375.00	HARNESS, TRANS WRG (AC–DELCO #12189828)
99–00	Y 6–SPD M/TRANS (MM6), CHASSIS, REALTIME DAMPING (F45), (EXC EUROPEAN PROVISIONS (VD1) (EXPORT)	12189829	1	311.00	HARNESS, TRANS WRG (AC–DELCO #12189829)
01–02	Y 4–SPD A/TRANS (M30), (EXC CHASSIS, REALTIME DAMPING (F45)	10448120	1	248.00	HARNESS, TRANS WRG
01–02	Y 6–SPD M/TRANS (MM6), (EXC CHASSIS, REALTIME DAMPING (F45), EUROPEAN PROVISIONS (VD1) (EXPORT)	10448121	1		HARNESS, TRANS WRG
01–02	Y 4–SPD A/TRANS (M30), CHASSIS, REALTIME DAMPING (F45)	10448122	1		HARNESS, TRANS WRG
01–02	Y 6–SPD M/TRANS (MM6), CHASSIS, REALTIME DAMPING (F45), (EXC EUROPEAN PROVISIONS (VD1) (EXPORT)	10448123	1	311.00	HARNESS, TRANS WRG
01–02	YY37	10448126	1		HARNESS, TRANS WRG
97	Y 5.7G (LS1)	15320549	1	29.84	WIRE, KNOCK SEN
98	Y 5.7G (LS1), (1ST DES)	15320549	1	29.84	WIRE, KNOCK SEN (USE W/KNOCK SENSOR STAMPED 10456222 & W/INDEX TAB ON CONNECTOR TO SENSOR) (FOR 2ND DES SEE 15320925)
98	Y 5.7G (LS1), (2ND DES)	15320925	1	29.84	WIRE, KNOCK SEN (USE W/KNOCK SENSOR STAMPED 10456603 & CONNECTOR W/O INDEX TAB) (FOR 1ST DES SEE 153205-9)
99–01	Y 5.7G (LS1)	15372170	1	29.84	WIRE, KNOCK SEN
01	Y 5.7S (LS6)	15372170	1	29.84	WIRE, KNOCK SEN
02	Y 5.7G (LS1)	15372170	1	29.84	WIRE, KNOCK SEN
02	Y 5.7S (LS6)	15372170	1	29.84	WIRE, KNOCK SEN
	*EXPORT**********EXPORT**********EXPORT**********EXPORT**********EXPORT*				
97	Y EUROPEAN PROVISIONS (VD1) (EXPORT)	12189883	1	944.44	HARNESS, FWD LP WRG
97	Y SIG & MKR LP (T90) (EXPORT), VE1 (EXPORT)	12189884	1	295.80	HARNESS, FWD LP WRG
99	Y07–67 SIG & MKR LP (T90) (EXPORT), (EXC ACTIVE BRAKE CTL (JL4)	12189975	1	301.92	HARNESS, FWD LP WRG
99	Y07–67 ACTIVE BRAKE CTL (JL4), SIG & MKR LP (T90) (EXPORT)	12189978	1	300.90	HARNESS, FWD LP WRG

cardiagn.com

2.480 HARNESS – WIRE, Chassis Wiring(Con't)

00	Y07–67 SIG & MKR LP (T90) (EXPORT), (EXC ACTIVE BRAKE CTL (JL4)	15329408	1	301.92	HARNESS, FWD LP WRG .....
00	Y07–67 ACTIVE BRAKE CTL (JL4), SIG & MKR LP (T90) (EXPORT) ...	15329408	1	300.90	HARNESS, FWD LP WRG .....
02	YY07–67 SIG & MKR LP (T90) (EXPORT)	10310798	1	300.90	HARNESS, FWD LP WRG .....
97	Y07 SIG & MKR LP (T90) (EXPORT)	15329463	1	40.09	HARNESS, FWD LP WRG HARN EXTN .
98–99	Y07–67 SIG & MKR LP (T90) (EXPORT)	15329463	1	40.09	HARNESS, FWD LP WRG HARN EXTN .
00–02	Y07–67 SIG & MKR LP (T90) (EXPORT)	15329463	1	40.09	HARNESS, FWD LP WRG HARN EXTN .
97	Y 4–SPD A/TRANS (M30), A/C FRT AUTO/AUX CONT (CJ2), TAIL & S/LP (T89) (EXPORT), (EXC SPECIAL TAIL & S/LP (T93), CANADIAN (Z49)	12189872	1	1257.59	HARNESS, I/P WRG .....
97	Y 6–SPD M/TRANS (MM6), A/C FRT AUTO/AUX CONT (CJ2), TAIL & S/LP (T89) (EXPORT), (EXC SPECIAL TAIL & S/LP (T93), CANADIAN (Z49)	12189873	1	1257.59	HARNESS, I/P WRG .....
97	Y 4–SPD A/TRANS (M30), A/C MAN CONT (C60), TAIL & S/LP (T89) (EXPORT), (EXC SPECIAL TAIL & S/LP (T93), CANADIAN (Z49)	12189878	1		HARNESS, I/P WRG .....
98	Y07 4–SPD A/TRANS (M30), A/C FRT AUTO/AUX CONT (CJ2), TAIL & S/LP (T89) (EXPORT), (EXC FRT ABS BRAKE LOC (JAG), SPECIAL TAIL & S/LP (T93), CANADIAN (Z49)	12189817	1	1257.59	HARNESS, I/P WRG .....
98	Y07 6–SPD M/TRANS (MM6), A/C FRT AUTO/AUX CONT (CJ2), TAIL & S/LP (T89) (EXPORT), (EXC FRT ABS BRAKE LOC (JAG), SPECIAL TAIL & S/LP (T93), CANADIAN (Z49)	12189818	1	1257.59	HARNESS, I/P WRG .....
98	Y07 4–SPD A/TRANS (M30), A/C MAN CONT (C60), TAIL & S/LP (T89) (EXPORT), (EXC FRT ABS BRAKE LOC (JAG), SPECIAL TAIL & S/LP (T93), CANADIAN (Z49) ...	12189823	1	1257.59	HARNESS, I/P WRG .....
98	Y07 6–SPD M/TRANS (MM6), A/C MAN CONT (C60), TAIL & S/LP (T89) (EXPORT), (EXC FRT ABS BRAKE LOC (JAG), SPECIAL TAIL & S/LP (T93), CANADIAN (Z49) ...	12189824	1	1257.59	HARNESS, I/P WRG ....
98	Y07 4–SPD A/TRANS (M30), A/C FRT AUTO/AUX CONT (CJ2), FRT ABS BRAKE LOC (JAG), ACTIVE BRAKE CTL (JL4), TAIL & S/LP (T89) (EXPORT)	12190404	1	1233.23	HARNESS, I/P WRG (MUST BE USED W/BODY CONT MDL LABELED 9359821 FOR 1998) .....
98	Y07 6–SPD M/TRANS (MM6), A/C FRT AUTO/AUX CONT (CJ2), FRT ABS BRAKE LOC (JAG), ACTIVE BRAKE CTL (JL4), TAIL & S/LP (T89) (EXPORT)	12190405	1	1233.23	HARNESS, I/P WRG (MUST BE USED W/BODY CONT MDL LABELED 9359821 FOR 1998) .....

cardiagn.com

2.480 HARNESS – WIRE, Chassis Wiring(Con't)

98	Y07 4–SPD A/TRANS (M30), A/C MAN CONT (C60), FRT ABS BRAKE LOC (JAG), ACTIVE BRAKE CTL (JL4), TAIL & S/LP (T89) (EXPORT)	12190410	1	1233.23	HARNESS, I/P WRG (MUST BE USED W/BODY CONT MDL LABELED 9359821 FOR 1998) .....
98	Y07 6–SPD M/TRANS (MM6), A/C MAN CONT (C60), FRT ABS BRAKE LOC (JAG), ACTIVE BRAKE CTL (JL4), TAIL & S/LP (T89) (EXPORT)	12190411	1	1233.23	HARNESS, I/P WRG (MUST BE USED W/BODY CONT MDL LABELED 9359821 FOR 1998) .....
98	Y07 4–SPD A/TRANS (M30), A/C FRT AUTO/AUX CONT (CJ2), FRT ABS BRAKE LOC (JAG), TAIL & S/LP (T89) (EXPORT), (EXC ACTIVE BRAKE CTL (JL4), SPECIAL TAIL & S/LP (T93), CANADIAN (Z49)	12190416	1	1257.59	HARNESS, I/P WRG (MUST BE USED W/BODY CONT MDL LABELED 9359821 FOR 1998) .....
98	Y07 6–SPD M/TRANS (MM6), A/C FRT AUTO/AUX CONT (CJ2), FRT ABS BRAKE LOC (JAG), TAIL & S/LP (T89) (EXPORT), (EXC ACTIVE BRAKE CTL (JL4), SPECIAL TAIL & S/LP (T93), CANADIAN (Z49)	12190417	1	1257.59	HARNESS, I/P WRG (MUST BE USED W/BODY CONT MDL LABELED 9359821 FOR 1998) .....
98	Y07 4–SPD A/TRANS (M30), A/C MAN CONT (C60), FRT ABS BRAKE LOC (JAG), TAIL & S/LP (T89) (EXPORT), (EXC ACTIVE BRAKE CTL (JL4), SPECIAL TAIL & S/LP (T93), CANADIAN (Z49)	12190422	1	1257.59	HARNESS, I/P WRG (MUST BE USED W/BODY CONT MDL LABELED 9359821 FOR 1998) .....
98	Y07 6–SPD M/TRANS (MM6), A/C MAN CONT (C60), FRT ABS BRAKE LOC (JAG), TAIL & S/LP (T89) (EXPORT), (EXC ACTIVE BRAKE CTL (JL4), SPECIAL TAIL & S/LP (T93), CANADIAN (Z49)	12190423	1	1257.59	HARNESS, I/P WRG (MUST BE USED W/BODY CONT MDL LABELED 9359821 FOR 1998) .....
98	Y67 4–SPD A/TRANS (M30), A/C FRT AUTO/AUX CONT (CJ2), TAIL & S/LP (T89) (EXPORT), (EXC FRT ABS BRAKE LOC (JAG), SPECIAL TAIL & S/LP (T93), CANADIAN (Z49)	12189809	1	1257.59	HARNESS, I/P WRG .....
98	Y67 4–SPD A/TRANS (M30), A/C MAN CONT (C60), TAIL & S/LP (T89) (EXPORT), (EXC FRT ABS BRAKE LOC (JAG), SPECIAL TAIL & S/LP (T93), CANADIAN (Z49) ...	12189810	1	1257.59	HARNESS, I/P WRG .....
98	Y67 6–SPD M/TRANS (MM6), A/C FRT AUTO/AUX CONT (CJ2), TAIL & S/LP (T89) (EXPORT), (EXC FRT ABS BRAKE LOC (JAG), SPECIAL TAIL & S/LP (T93), CANADIAN (Z49)	12189811	1	1257.59	HARNESS, I/P WRG .....
98	Y67 6–SPD M/TRANS (MM6), A/C MAN CONT (C60), TAIL & S/LP (T89) (EXPORT), (EXC FRT ABS BRAKE LOC (JAG), SPECIAL TAIL & S/LP (T93), CANADIAN (Z49) ...	12189812	1	1257.59	HARNESS, I/P WRG .....
98	Y67 4–SPD A/TRANS (M30), A/C FRT AUTO/AUX CONT (CJ2), FRT ABS BRAKE LOC (JAG), TAIL & S/LP (T89) (EXPORT)	12189988	1	1233.23	HARNESS, I/P WRG (MUST BE USED W/BODY CONT MDL LABELED 9359821 FOR 1998) .....

cardiagn.com

2.480 HARNESS – WIRE, Chassis Wiring(Con't)

98	Y67 4-SPD A/TRANS (M30), A/C MAN CONT (C60), FRT ABS BRAKE LOC (JAG), TAIL & S/LP (T89) (EXPORT)	12189989	1	1233.23	HARNESS, I/P WRG (MUST BE USED W/BODY CONT MDL LABELED 9359821 FOR 1998)
98	Y67 6-SPD M/TRANS (MM6), A/C FRT AUTO/AUX CONT (CJ2), FRT ABS BRAKE LOC (JAG), TAIL & S/LP (T89) (EXPORT)	12189990	1	1233.23	HARNESS, I/P WRG (MUST BE USED W/BODY CONT MDL LABELED 9359821 FOR 1998)
98	Y67 6-SPD M/TRANS (MM6), A/C MAN CONT (C60), FRT ABS BRAKE LOC (JAG), TAIL & S/LP (T89) (EXPORT)	12189991	1	1233.23	HARNESS, I/P WRG (MUST BE USED W/BODY CONT MDL LABELED 9359821 FOR 1998)
99-00	Y07 4-SPD A/TRANS (M30), A/C FRT AUTO/AUX CONT (CJ2), ACTIVE BRAKE CTL (JL4), TAIL & S/LP (T89) (EXPORT)	12190426	1	1233.23	HARNESS, I/P WRG (MAY REQUIRE 12450028 I/P COMPT LP & 12102616 PWR RCPT CONN)
99-00	Y07 4-SPD A/TRANS (M30), A/C MAN CONT (C60), ACTIVE BRAKE CTL (JL4), TAIL & S/LP (T89) (EXPORT)	12190428	1	1233.23	HARNESS, I/P WRG (MAY REQUIRE 12450028 I/P COMPT LP & 12102616 PWR RCPT CONN)
99-00	Y07 6-SPD M/TRANS (MM6), A/C FRT AUTO/AUX CONT (CJ2), ACTIVE BRAKE CTL (JL4), TAIL & S/LP (T89) (EXPORT)	12190431	1	1233.23	HARNESS, I/P WRG (MAY REQUIRE 12450028 I/P COMPT LP & 12102616 PWR RCPT CONN)
99-00	Y07 6-SPD M/TRANS (MM6), A/C MAN CONT (C60), ACTIVE BRAKE CTL (JL4), TAIL & S/LP (T89) (EXPORT)	12190433	1	1233.23	HARNESS, I/P WRG (MAY REQUIRE 12450028 I/P COMPT LP & 12102616 PWR RCPT CONN)
99-00	Y07 4-SPD A/TRANS (M30), A/C FRT AUTO/AUX CONT (CJ2), TAIL & S/LP (T89) (EXPORT), (EXC ACTIVE BRAKE CTL (JL4)	12190436	1	1257.59	HARNESS, I/P WRG (MAY REQUIRE 12450028 I/P COMPT LP & 12102616 PWR RCPT CONN)
99-00	Y07 4-SPD A/TRANS (M30), A/C MAN CONT (C60), TAIL & S/LP (T89) (EXPORT), (EXC ACTIVE BRAKE CTL (JL4)	12190438	1	1257.59	HARNESS, I/P WRG (MAY REQUIRE 12450028 I/P COMPT LP & 12102616 PWR RCPT CONN)
99-00	Y07 6-SPD M/TRANS (MM6), A/C FRT AUTO/AUX CONT (CJ2), TAIL & S/LP (T89) (EXPORT), (EXC ACTIVE BRAKE CTL (JL4)	12190441	1	1257.59	HARNESS, I/P WRG (MAY REQUIRE 12450028 I/P COMPT LP & 12102616 PWR RCPT CONN)
99-00	Y07 6-SPD M/TRANS (MM6), A/C MAN CONT (C60), TAIL & S/LP (T89) (EXPORT), (EXC ACTIVE BRAKE CTL (JL4)	12190443	1	1257.59	HARNESS, I/P WRG (MAY REQUIRE 12450028 I/P COMPT LP & 12102616 PWR RCPT CONN)
99-00	Y67 4-SPD A/TRANS (M30), A/C FRT AUTO/AUX CONT (CJ2), TAIL & S/LP (T89) (EXPORT)	12190446	1	1233.23	HARNESS, I/P WRG (MAY REQUIRE 12450028 I/P COMPT LP & 12102616 PWR RCPT CONN)
99-00	Y67 4-SPD A/TRANS (M30), A/C MAN CONT (C60), TAIL & S/LP (T89) (EXPORT)	12190448	1	1233.23	HARNESS, I/P WRG (MAY REQUIRE 12450028 I/P COMPT LP & 12102616 PWR RCPT CONN)
99-00	Y67 6-SPD M/TRANS (MM6), A/C FRT AUTO/AUX CONT (CJ2), TAIL & S/LP (T89) (EXPORT)	12190451	1	1233.23	HARNESS, I/P WRG (MAY REQUIRE 12450028 I/P COMPT LP & 12102616 PWR RCPT CONN)
99-00	Y67 6-SPD M/TRANS (MM6), A/C MAN CONT (C60), TAIL & S/LP (T89) (EXPORT)	12190453	1	1233.23	HARNESS, I/P WRG (MAY REQUIRE 12450028 I/P COMPT LP & 12102616 PWR RCPT CONN)
00	Y07 4-SPD A/TRANS (M30), A/C FRT AUTO/AUX CONT (CJ2), ACTIVE BRAKE CTL (JL4), TAIL & S/LP (T89) (EXPORT)	10442561	1	1233.23	HARNESS, I/P WRG (INCLUDES PROVISIONS FOR MAN. SUPPRESSION SYS. INCLUDES HARN. INLINE P/DOOR)

cardiagn.com

2.480 HARNESS – WIRE, Chassis Wiring(Con't)

00	Y07 6–SPD M/TRANS (MM6), A/C FRT AUTO/AUX CONT (CJ2), ACTIVE BRAKE CTL (JL4), TAIL & S/LP (T89) (EXPORT)	10442565	1	1233.23	HARNESS, I/P WRG (INCLUDES PROVISIONS FOR MAN. SUPPRESSION SYS. INCLUDES HARN. INLINE P/DOOR)
00	Y07 4–SPD A/TRANS (M30), A/C FRT AUTO/AUX CONT (CJ2), TAIL & S/LP (T89) (EXPORT), (EXC ACTIVE BRAKE CTL (JL4)	10442569	1	1257.59	HARNESS, I/P WRG (INCLUDES PROVISIONS FOR MAN. SUPPRESSION SYS. INCLUDES HARN.INLINE P/DOOR)
00	Y07 6–SPD M/TRANS (MM6), A/C FRT AUTO/AUX CONT (CJ2), TAIL & S/LP (T89) (EXPORT), (EXC ACTIVE BRAKE CTL (JL4)	10442573	1	1257.59	HARNESS, I/P WRG (INCLUDES PROVISIONS FOR MAN. SUPPRESSION SYS. INCLUDES HARN.INLINE P/DOOR)
00	Y07 4–SPD A/TRANS (M30), A/C MAN CONT (C60), ACTIVE BRAKE CTL (JL4), TAIL & S/LP (T89) (EXPORT)	15329429	1	1233.23	HARNESS, I/P WRG
00	Y07 6–SPD M/TRANS (MM6), A/C MAN CONT (C60), ACTIVE BRAKE CTL. (JL4), TAIL & S/LP (T89) (EXPORT)	15329434	1	1233.23	HARNESS, I/P WRG
00	Y07 4–SPD A/TRANS (M30), A/C MAN CONT (C60), TAIL & S/LP (T89) (EXPORT), (EXC ACTIVE BRAKE CTL (JL4)	15329439	1	1257.59	HARNESS, I/P WRG
00	Y07 6–SPD M/TRANS (MM6), A/C MAN CONT (C60), TAIL & S/LP (T89) (EXPORT), (EXC ACTIVE BRAKE CTL (JL4)	15329444	1	1257.59	HARNESS, I/P WRG
00	Y67 4–SPD A/TRANS (M30), A/C FRT AUTO/AUX CONT (CJ2), TAIL & S/LP (T89) (EXPORT)	10442577	1	1233.23	HARNESS, I/P WRG (INCLUDES PROVISIONS FOR MAN. SUPPRESSION SYS. INCLUDES HARN.INLINE P/DOOR)
00	Y67 6–SPD M/TRANS (MM6), A/C FRT AUTO/AUX CONT (CJ2), TAIL & S/LP (T89) (EXPORT)	10442581	1	1233.23	HARNESS, I/P WRG (INCLUDES PROVISIONS FOR MAN. SUPPRESSION SYS. INCLUDES HARN.INLINE P/DOOR)
00	Y67 4–SPD A/TRANS (M30), A/C MAN CONT (C60), TAIL & S/LP (T89) (EXPORT)	15329449	1	1233.23	HARNESS, I/P WRG
00	Y67 6–SPD M/TRANS (MM6), A/C MAN CONT (C60), TAIL & S/LP (T89) (EXPORT)	15329454	1	1233.23	HARNESS, I/P WRG
01	Y07 4–SPD A/TRANS (M30), A/C FRT AUTO/AUX CONT (CJ2), ACTIVE BRAKE CTL (JL4), TAIL & S/LP (T89) (EXPORT), (2ND DES)	10310783	1	1233.23	HARNESS, I/P WRG (2ND DSN USED ON/AFTER VIN #15107689, (1ST DSN 10448091))
01	Y07 6–SPD M/TRANS (MM6), A/C FRT AUTO/AUX CONT (CJ2), ACTIVE BRAKE CTL (JL4), TAIL & S/LP (T89) (EXPORT), (2ND DES)	10310784	1	1233.23	HARNESS, I/P WRG (2ND DSN USED ON/AFTER VIN #15107689, (1ST DSN 10448092))
01	Y07 4–SPD A/TRANS (M30), A/C FRT AUTO/AUX CONT (CJ2), ACTIVE BRAKE CTL (JL4), TAIL & S/LP (T89) (EXPORT), (1ST DES)	10448091	1	1233.23	HARNESS, I/P WRG (1ST DSN USED B/4 VIN #15107689, (2ND DSN 10310783))
01	Y07 6–SPD M/TRANS (MM6), A/C FRT AUTO/AUX CONT (CJ2), ACTIVE BRAKE CTL (JL4), TAIL & S/LP (T89) (EXPORT), (1ST DES)	10448092	1	1233.23	HARNESS, I/P WRG (1ST DSN USED VIN #15107689, (2ND DSN 10784))
01	Y67 4–SPD A/TRANS (M30), A/C FRT AUTO/AUX CONT (CJ2), TAIL & S/LP (T89) (EXPORT), (2ND DES)	10310701	1	1233.23	HARNESS, I/P WRG (2ND DSN USED ON/AFTER VIN #15107689, (1ST DSN 10448107))

cardiagn.com

2.480 HARNESS – WIRE, Chassis Wiring(Con't)

01	Y67 6–SPD M/TRANS (MM6), A/C FRT AUTO/AUX CONT (CJ2), TAIL & S/LP (T89) (EXPORT), (2ND DES)	10310792	1	1233.23	HARNESS, I/P WRG (2ND DSN USED ON/AFTER VIN #15107689, (1ST DSN 10448108))
01	Y67 4–SPD A/TRANS (M30), A/C FRT AUTO/AUX CONT (CJ2), TAIL & S/LP (T89) (EXPORT), (1ST DES)	10448107	1	1233.23	HARNESS, I/P WRG (1ST DSN USED B/4 VIN #15107689, (2ND DSN 10310791))
01	Y67 6–SPD M/TRANS (MM6), A/C FRT AUTO/AUX CONT (CJ2), TAIL & S/LP (T89) (EXPORT), (1ST DES)	10448108	1	1233.23	HARNESS, I/P WRG (1ST DSN USED B/4 VIN #15107689, (2ND DSN 10310792))
02	YY67 4–SPD A/TRANS (M30), A/C FRT AUTO/AUX CONT (CJ2), TAIL & S/LP (T89) (EXPORT)	10310791	1	1233.23	HARNESS, I/P WRG
02	YY67 6–SPD M/TRANS (MM6), A/C FRT AUTO/AUX CONT (CJ2), TAIL & S/LP (T89) (EXPORT)	10310792	1	1233.23	HARNESS, I/P WRG
02	Y07 4–SPD A/TRANS (M30), A/C FRT AUTO/AUX CONT (CJ2), TAIL & S/LP (T89) (EXPORT)	10310783	1	1233.23	HARNESS, I/P WRG
02	Y07 6–SPD M/TRANS (MM6), A/C FRT AUTO/AUX CONT (CJ2), TAIL & S/LP (T89) (EXPORT)	10310784	1	1233.23	HARNESS, I/P WRG
98	Y 6–SPD M/TRANS (MM6), CHASSIS, REALTIME DAMPING (F45), EUROPEAN PROVISIONS (VD1) (EXPORT), (EXC FRT ABS BRAKE LOC (JAG)	12189908	1	628.00	HARNESS, TRANS WRG (AC–DELCO #12189908)
98	Y 6–SPD M/TRANS (MM6), EUROPEAN PROVISIONS (VD1) (EXPORT), (EXC CHASSIS, REALTIME DAMPING (F45), FRT ABS BRAKE LOC (JAG)	12189909	1	425.00	HARNESS, TRANS WRG (AC–DELCO #12189909)
98	Y 6–SPD M/TRANS (MM6), CHASSIS, REALTIME DAMPING (F45), FRT ABS BRAKE LOC (JAG), EUROPEAN PROVISIONS (VD1) (EXPORT)	12189912	1	543.43	HARNESS, TRANS WRG
98	Y 6–SPD M/TRANS (MM6), FRT ABS BRAKE LOC (JAG), EUROPEAN PROVISIONS (VD1) (EXPORT), (EXC CHASSIS, REALTIME DAMPING (F45)	12189913	1	367.44	HARNESS, TRANS WRG
99–00	Y 6–SPD M/TRANS (MM6), CHASSIS, REALTIME DAMPING (F45), EUROPEAN PROVISIONS (VD1) (EXPORT)	12189914	1	201.00	HARNESS, TRANS WRG (ENHANCE EVAP) (AC–DELCO #12189914)
99–00	Y 6–SPD M/TRANS (MM6), EUROPEAN PROVISIONS (VD1) (EXPORT), (EXC CHASSIS, REALTIME DAMPING (F45)	12189915	1	264.00	HARNESS, TRANS WRG (ENHANCE EVAP) (AC–DELCO #12189915)
01–02	Y 6–SPD M/TRANS (MM6), CHASSIS, REALTIME DAMPING (F45), EUROPEAN PROVISIONS (VD1) (EXPORT)	10448124	1		HARNESS, TRANS WRG (ENHANCE EVAP)
01–02	Y 6–SPD M/TRANS (MM6), EUROPEAN PROVISIONS (VD1) (EXPORT), (EXC CHASSIS, REALTIME DAMPING (F45)	10448125	1		HARNESS, TRANS WRG (ENHANCE EVAP)

cardiagn.com

2.483 BLOCK – BOLT – BRACKET – CONNECTOR – COVER – LABEL – PLATE – PULLER – SHIELD – STUD, Main Wiring Junction and Fuse Block

97	Y	12102616	1	14.89	CONNECTOR, BLK–ACSRY WRG JUNC (2–WAY F) (W/LEADS) (02.530) (AC–DELCO #PT303)
97–98	Y	12126486	1	61.98	CONNECTOR, BLK–ACSRY WRG JUNC (3–WAY F FLEX LOCK W/LEADS) (02.694) (AC–DELCO #PT756)
97–98	Y	12129490	1	2.35	CONNECTOR, BLK–ACSRY WRG JUNC (3–WAY M, W/O LEADS) (CLIP SLOT) (13.100)
02	Y CHASSIS, REALTIME DAMPING (F45)	15305928	1	33.42	CONNECTOR, BLK–ACSRY WRG JUNC (BLACK) (2–WAY F, MAXI FUSE, W/LEADS) (02.530) (AC–DELCO #PT1187)
99–00	Y	15303514	1	5.53	CONNECTOR, BLK–ENG WRG JUNC (BROWN) (68–WAY F, M/P 280 FLYLK, W/O LEADS) (02.530)
99	Y37 (EXC ACTIVE BRAKE CTL (JL4), P/S (VARIABLE) (NV7), FRT FOG LP (T96)	15303512	1	5.53	CONNECTOR, BLK–ENG WRG JUNC (GRAY) (68–WAY F W/O LEADS) (02.530)
00	Y	15303512	1	5.53	CONNECTOR, BLK–ENG WRG JUNC (GRAY) (68–WAY F W/O LEADS) (02.530)
00	Y	15303513	1	5.53	CONNECTOR, BLK–ENG WRG JUNC (FRT) (BLACK) (68–WAY F M/P 280 FLXLK W/O LEADS) (02.530)
97–00	Y	12177206	1	5.71	CONNECTOR, BLK–I/P WRG JUNC (BLACK) (68–WAY F, M/P 280 FLXLK, W/O LEADS) (02.530)
97–00	Y	12177207	1	5.71	CONNECTOR, BLK–I/P WRG JUNC (GRAY) (68–WAY F, M/P 280 FLXLK, W/O LEADS) (02.530)
99–00	Y	15305886	1	20.91	CONNECTOR, BLK–I/P WRG JUNC (GRAY) (2–WAY F MAXI FUSE CONN W/LEADS) (02.530) (AC–DELCO #PT1028)
99–00	Y	15305920	1	33.42	CONNECTOR, BLK–I/P WRG JUNC (GREEN) (2–WAY F W/LEADS) (02.530) (AC–DELCO #PT1169)
99–00	Y	15305881	1	20.91	CONNECTOR, BLK–I/P WRG JUNC (2–WAY F MAXI FUSE W/LEADS) (02.530) (AC–DELCO #PT1100)
00	Y	12177208	1	5.71	CONNECTOR, BLK–I/P WRG JUNC (68–WAY F, M/P 280 FLXLK, W/O LEADS, GRAY) (02.530)
00–02	Y	15305920	1	33.42	CONNECTOR, BLK–I/P WRG JUNC (BLACK) (2–WAY F, MAXI FUSE W/LEADS) (02.530) (AC–DELCO #PT1187)
97–99	Y	12120446	2	60.30	CONNECTOR, FUSE–AUTO (2–WAY F W/LEADS & COVER) (02.535)
02	Y	12120446	2	60.30	CONNECTOR, FUSE–AUTO (2–WAY F, W/LEADS & COVER) (02.535)
97–99	Y	12086401	8	17.40	CONNECTOR, INJR–FUEL (2–WAY F) (W/LEADS) (02.535) (AC–DELCO #PT113)
00–02	Y 6.7L (L51) 6–SPD M TRANS (MM6), 4–SPD A/TRANS (MJ0)	12086401	8	17.40	CONNECTOR, INJR–FUEL (2–WAY F) (W/LEADS) (02.535) (AC–DELCO #PT113)

cardiagn.com

2.483 BLOCK – BOLT – BRACKET – CONNECTOR – COVER – LABEL – PLATE – PULLER – SHIELD – STUD, Main Wiring Junction and Fuse Block(Con't)

01–02	Y 5.7S (LS6)	12085491	8	17.40	CONNECTOR, INJR–FUEL (2–WAY F) (W/LEADS) (02.535) (AC–DELCO #PT113)
97	Y07 (EXC SIG & MKR LP (T90) (EXPORT)	15319540	1	DISCON	LABEL, ENG WRG HARN ACSRY RLY & FUSE IDENT
98–99	Y	12194082	1	.78	LABEL, ENG WRG HARN ACSRY RLY & FUSE IDENT
00–02	Y	15328703	1	8.50	LABEL, ENG WRG HARN ACSRY RLY & FUSE IDENT
97	Y	12176907	1	.78	LABEL, FUSE BLK IDENT
98	Y	12194083	1	.78	LABEL, FUSE BLK IDENT
99–02	Y	15319414	1	.78	LABEL, FUSE BLK IDENT
97	Y	10135646	2	3.33	PLATE, MULTIUSE RLY BRKT STUD (M6 X 1 X 24) (01.271)
97–02	Y	10402723	1	3.33	PLATE, MULTIUSE RLY BRKT STUD (BRACKET REPLACES CENTER–MOST OF THE THREE SIMILAR BRACKETS ON THE PASSENGER SIDE OF DASHBOARD & BOTH BRACKETS ON DRIVER SIDE OF DASHBOARD) (03.162)
97–00	Y	14088668	1	3.45	PLATE, MULTIUSE RLY BRKT STUD (BRACKET REPLACES THE TWO OUTBOARD OF THE THREE SIMILAR BRACKETS ON THE PASSENGER SIDE OF DASHBOARD) (12.986)
01–02	Y	14088668	2	3.45	PLATE, MULTIUSE RLY BRKT STUD (12.986)
97–02	Y	10135646	2	3.33	STUD, ENG WRG HARN J/BLK (M6 X 1 X 24) (01.271)
98–02	Y	10135646	2	3.33	STUD, MULTIUSE RLY BRKT (ANC PLT) (M6 X 1 X 24) (01.271)
	EXPORT	*EXPORT*	*EXPORT*	*EXPORT*	*EXPORT*
97	Y07 SIG & MKR LP (T90) (EXPORT)	12176792	1	1.03	LABEL, ENG WRG HARN ACSRY RLY & FUSE IDENT

2.486 CONNECTOR – MODULE – RELAY – SENSOR – SWITCH, Capsule/Headlamp/Fog Lamp

97	Y	12101875	1	33.66	CONNECTOR, MDL – DAYTIME RUNNING LP CONT (BLUE) (8 WAY F) (W/LEADS) (02.535) (AC DELCO #PT266)
97–98	Y07	15306180	1	42.09	CONNECTOR, MDL DAYTIME RUNNING LP CONT (BLACK) (8 WAY F W/LEADS 7 12GA & 4 18GA AS REQ) (02.535) (AC DELCO #PT1346)
98	Y07	12101875	1	33.66	CONNECTOR MDL DAYTIME RUNNING LP CONT (BLUE) (8 WAY F) (W/LEADS) (02.535) (AC DELCO #PT266)
01–02	YY07 6 SPD M/TRANS (MM6), A/C MAN CONT (C.60) (EXC TAT WIR (N17)	15306180	1	42.09	CONNECTOR MDL DAYTIME RUNNING LP CONT (8 WAY FEMALE MP 200 (W/LEADS) (INSTALL LEADS AS DESIRED) ; (BLACK) (8 WAY F W/LEADS 7 12GA & 4 18GA AS REQ) (02.535) (AC DELCO #PT1346)

cardiagn.com

2.485 CONNECTOR – MODULE – RELAY – SENSOR – SWITCH, Capsule/Headlamp/Fog Lamp(Con't)

97–02	Y	12102775	1	31.62	CONNECTOR, MDL–HDLP CONT (5–WAY F, W/LEADS) (02.760) (AC–DELCO #PT284)
97–02	Y	12102776	1	31.62	CONNECTOR, MDL–HDLP CONT (4–WAY F, W/LEADS) (02.170) (AC–DELCO #PT402)
97–00	Y	12088535	1	18.01	CONNECTOR, SEN–DAYTIME RUNNING LP AMB LGT (2–WAY F W/LEADS W/INDEX TAB OTR EDGE OF CAVITY B) (02.535) (AC–DELCO #PT146)
97–02	Y	12101874	1	43.35	CONNECTOR, SW–FOG LP (02.535) (AC–DELCO #PT265)
02	YY67 4–SPD A/TRANS (M30), A/C FRT AUTO/AUX CONT (CJ2), T&T WHL (N37), (EXC TAIL & S/LP (T89) (EXPORT)	12101874	1	43.35	CONNECTOR, SW–FOG LP (02.535) (AC–DELCO #PT265)
97–98	Y CANADIAN (Z49)	10407660	1	81.85	MODULE, HDLP AUTO CONT
97–98	Y CANADIAN (Z49)	10261143	1	12.33	SENSOR, DAYTIME RUNNING LP AMB LGT
99–02	Y AUTO HDLP CONT (T82), CANADIAN (Z49)	12450121	1	11.49	SENSOR, DAYTIME RUNNING LP AMB LGT
97–02	Y FRT FOG LP (T96), (EXC EUROPEAN PROVISIONS (VD1) (EXPORT)	12135186	1	43.07	SWITCH, FOG LP (INCLUDES HATCH RELEASE SWITCH)
97–98	Y	26075870	1	213.71	SWITCH, HDLP & T/SIG & CRCONT (W/ LVR) (AC–DELCO #D1612G)
99–02	Y	26075870	1	213.71	SWITCH, HDLP & T/SIG & CRCONT (W/ LVR) (AC–DELCO #D1612G)
	EXPORT	*EXPORT*	*EXPORT*	*EXPORT*	*EXPORT*
97–02	Y EUROPEAN PROVISIONS (VD1) (EXPORT)	12135186	1	43.07	SWITCH FOG LP

2.530 CONNECTOR – COVER – INSULATOR – PLUG – SEAL, Chassis Electrical

97–02	Y	16305201	1	1.48	CONNECTOR, GND –BUS BAR (12 WAY F GT– 280, W/O UPR CONN/CVR, W/O LEADS, MATES W/16305202 CONN/CVR) (12– WAY F)
97–02	Y	16305202	1	2.76	CONNECTOR GND BUS BAR (MATES WITH AND ACTS AS A CVR FOR 16305201)
97–02	Y	16305204	2	1.48	CONNECTOR GND BUS BAR (12 WAY FEMALE BUS BAR OPTEN USED W/16305300 UPR (COVER)) (LOWER) (12 WAY FEMALE) (W O LEADS)
97–02	Y	16305300	2	2.75	CONNECTOR GND BUS BAR (USED AS COVER FOR 12 WAY BUS BAR 16305204) (THIS IS A MALE CAP BAR WHICH MATES TO 12 WAY FEMALE)
98–02	YY67	12102561	1	11.80	CONNECTOR GND BUS BAR (1 WAY F W/LEADS) (02.536) (AC DELCO #PT236)
99–00	Y	12167306	2	22.17	CONNECTOR GND BUS BAR (80 WAY F) (USE TERM 12084012 18 GA & TERM 12084013 20 GA) (01.670)

cardiagn.com

2.530 CONNECTOR – COVER – INSULATOR – PLUG – SEAL, Chassis Electrical(Con't)

01–02	YY07	12167133	1	12.95	CONNECTOR, GND–BUS BAR (1–WAY F) (W/LEADS) (M/P 630 SELF LK) (09.778) (AC–DELCO #PT798)
01–02	YY67 6–WAY PWR P/SEAT ADJR (AG2) SPEAKER SYSTEM 6 (UZ6)	15305294	1	1.48	CONNECTOR, GND–BUS BAR (LOWER) (12–WAY FEMALE) (W/O LEADS)
02	YY 4–SPD A/TRANS (M30), A/C FRT AUTO/AUX CONT (CJ2), T&T WHL (N37), (EXC TAIL & S/LP (T60) (EXPORT)	15305294	2	1.48	CONNECTOR, GND–BUS BAR (12–WAY FEMALE BUS BAR, OFTEN USED W/15305300 UPR (COVER)) (LOWER) (12–WAY FEMALE) (W/O LEADS)
97	Y CHASSIS, REALTIME DAMPING (F45)	12117025	4	22.50	CONNECTOR, INLINE–TO ELEK SUSP POSN SEN (BLACK) (3–WAY F) (W/LEADS) (02.383) (AC–DELCO #PT420)
98	Y CHASSIS, REALTIME DAMPING (F45), FRT ABS BRAKE LOC (JAG)	12117025	4	22.50	CONNECTOR, INLINE–TO ELEK SUSP POSN SEN (BLACK) (3–WAY F) (W/LEADS) (02.383) (AC–DELCO #PT420)
99–02	Y	12117025	4	22.50	CONNECTOR, INLINE–TO ELEK SUSP POSN SEN (BLACK) (3–WAY F) (W/LEADS) (02.383) (AC–DELCO #PT420)
97–02	Y 5.7G (L81), 6–SPD M/TRANS (MM6), 4–SPD A/TRANS (M30)	12102490	1	44.37	CONNECTOR, INLINE–TO ENG HARN (7–WAY M, W/LEADS) (AC–DELCO #PT281)
97–98	Y	12126076	1	66.81	CONNECTOR, INLINE–TO ENG HARN (BLACK) (10–WAY F) (W/LEADS) (AC–DELCO #PT688)
97–02	Y 5.7G (L81), 6–SPD M/TRANS (MM6), 4–SPD A/TRANS (M30)	12160280	1	2.50	CONNECTOR, INLINE–TO ENG HARN (20–WAY F) (W/O LEADS)
98–02	Y	12160842	1	2.50	CONNECTOR, INLINE–TO ENG HARN (20–WAY M, W/O LEADS)
98–00	Y 5.7G (L81), 6–SPD M/TRANS (MM6), 4–SPD A/TRANS (M30)	12167120	1	24.44	CONNECTOR, INLINE–TO ENG HARN (BLACK) (2–WAY M) (W/LEADS) (04.720) (AC–DELCO #PT706)
01–02	Y 5.7G (L81)	12102490	1	44.37	CONNECTOR, INLINE–TO ENG HARN (7–WAY M, W/LEADS) (AC–DELCO #PT281)
01–02	Y 5.7G (L81), 4–SPD A/TRANS (M30), (MM6)	12167120	1	24.44	CONNECTOR, INLINE–TO ENG HARN (BLACK) (2–WAY M) (W/LEADS) (04.720) (AC–DELCO #PT706)
01–02	Y 5.7G (L81)	12167120	1	24.44	CONNECTOR, INLINE–TO ENG HARN (BLACK) (2–WAY M) (W/LEADS) (04.720) (AC–DELCO #PT706)
01–02	Y 5.7G (L66) MANUAL 6 SPD O/D TRANS TREMEC (M12)	12167120	1	24.44	CONNECTOR, INLINE–TO ENG HARN (BLACK) (2–WAY M) (W/LEADS) (04.720) (AC–DELCO #PT706)
02	Y 5.7G (L66) MANUAL 6 SPD O/D TRANS TREMEC (M12)	12102490	1	44.37	CONNECTOR, INLINE–TO ENG HARN (7–WAY M, W/LEADS) (AC–DELCO #PT281)
02	YY37	12160280	1	2.50	CONNECTOR, INLINE–TO ENG HARN (20–WAY F) (W/O LEADS)
97–02	Y 5.7G (L81) 6–SPD M/TRANS (MM6) 4–SPD A/TRANS (M30)	12126076	1	66.81	CONNECTOR, INLINE–TO ENG HARN (BLACK) (10–WAY F) (W/LEADS) (AC–DELCO #PT688)

cardiagn.com

2.530 CONNECTOR – COVER – INSULATOR – PLUG – SEAL, Chassis Electrical(Con't)

00–02	Y	12117025	RH	22.50	CONNECTOR, INLINE–TO F/TNK HARN (BLACK) (3–WAY F) (W/LEADS) (02.383) (AC–DELCO #PT420)
02	YY37	12101899	1	10.52	CONNECTOR, INLINE–TO F/TNK HARN (BLACK) (2–WAY F W/LEADS) (02 383) (AC–DELCO #PT169)
97–98	Y	12102747	1	21.73	CONNECTOR, INLINE–TO FWD LP HARN (BLACK) (2–WAY F W/LEADS) (03.670) (AC–DELCO #PT374)
97–02	Y (EXC SIG & MKR LP (T90) (EXPORT)	12117271	1	59.43	CONNECTOR, INLINE–TO FWD LP HARN (WHITE) (8–WAY F W/LEADS) (02.536) (AC–DELCO #PT444)
98–02	Y	12126076	1	60.81	CONNECTOR, INLINE–TO FWD LP HARN (BLACK) (10–WAY F) (W/LEADS) (AC–DELCO #PT588)
98–00	Y	12100280	1	2.50	CONNECTOR, INLINE–TO FWD LP HARN (20–WAY F) (W/O LEADS)
99–00	Y07 67	12102747	1	21.73	CONNECTOR, INLINE–TO FWD LP HARN (BLACK) (2–WAY F W/LEADS) (03.670) (AC–DELCO #PT374)
99–00	Y37 LP GRP (TR9)	12102747	1	21.73	CONNECTOR, INLINE–TO FWD LP HARN (BLACK) (2–WAY F W/LEADS) (03.670) (AC–DELCO #PT374)
00	Y	12008669	1	23.52	CONNECTOR, INLINE–TO FWD LP HARN (1–WAY M) (W/LEAD) (BLACK) (AC–DELCO #PT1223)
01–02	Y	12101899	1	10.52	CONNECTOR, INLINE–TO FWD LP HARN (BLACK) (2–WAY F W/LEADS) (02 383) (AC–DELCO #PT169)
01–02	Y	12102747	1	21.73	CONNECTOR, INLINE–TO FWD LP HARN (BLACK) (2–WAY F W/LEADS) (03 670) (AC–DELCO #PT374)
01–02	Y	15326042	1		CONNECTOR, INLINE–TO FWD LP HARN (10–WAY F) (13 100)
01–02	Y	15326847	1		CONNECTOR, INLINE–TO FWD LP HARN (10–WAY M) (02 483)
01–02	YY67	15306410	1	118.35	CONNECTOR, INLINE–TO FWD LP HARN (16–WAY FEMALE GT 160.) (16 WAY FEMALE) (AC–DELCO #PT1463)
01–02	YY67 4–6SPD A/TRANS (M30), A/C FRT AUTO/AUX CONT (CJ2), TAT WHL (N37) (EXC TAT & S-LP (T60) (EXPORT)	15326266	1	3.33	CONNECTOR, INLINE–TO FWD LP HARN
02	Y 6–6SPD M/TRANS (MM6), 4–6SPD A/TRANS (M30)	12101899	1	10.52	CONNECTOR, INLINE–TO FWD LP HARN (BLACK) (2–WAY F W/LEADS) (02 383) (AC–DELCO #PT169)
02	YY37	12101899	1	10.52	CONNECTOR, INLINE–TO FWD LP HARN (BLACK) (2–WAY F W/LEADS) (02 383) (AC–DELCO #PT169)
01–02	Y	12102741	4	26.70	CONNECTOR, INLINE–TO HTD OXY SEN (4–WAY F) (W/LEADS IN A ROW) (04 651) (AC–DELCO #PT164)
97–02	Y	12101762	1	70.36	CONNECTOR, INLINE–TO LP HARN (10–WAY F W/LEADS) (02 536) (AC–DELCO #PT160)

cardiagn.com

2.530 CONNECTOR – COVER – INSULATOR – PLUG – SEAL, Chassis Electrical(Con't)

97–02	Y	12101832	1	46.41	CONNECTOR, INLINE–TO I/P HARN (BLUE) (10–WAY F) (W/LEADS) (AC PT224) (02.535) (AC–DELCO #PT224)
97–02	Y SPEAKER SYSTEM 6 (UZ6), MULTIPLE CD PLYR (U1S)	12102900	1	36.21	CONNECTOR, INLINE–TO I/P HARN (4–WAY F W/LEADS) (02.535) (AC–DELCO #PT382)
97–98	Y	12117270	1	56.37	CONNECTOR, INLINE–TO I/P HARN (8–WAY M W/LEADS) (AC–DELCO #PT443)
97	Y	12117371	1	25.70	CONNECTOR, INLINE–TO I/P HARN (3–WAY M W/LEADS) (AC–DELCO #PT504)
97–02	Y 6–SPD M/TRANS (MM6), 4–SPD A/TRANS (M30)	12117372	1	72.69	CONNECTOR, INLINE–TO I/P HARN (BLACK) (10–WAY M) (AC–DELCO #PT505)
97–00	Y	12160542	1	2.50	CONNECTOR, INLINE–TO I/P HARN (20–WAY M, W/O LEADS)
97–02	Y	15305800	2	30.36	CONNECTOR, INLINE–TO I/P HARN (6–WAY F W/LEADS) (13.090) (AC–DELCO #PT1032)
99	Y	12101822	1	33.42	CONNECTOR, INLINE–TO I/P HARN (GRAY) (8–WAY F) (W/LEADS) (02.535) (AC–DELCO #PT214)
01–02	Y	15320047	1		CONNECTOR, INLINE - TO I/P HARN (10–WAY M) (02.483)
01–02	YY	15306364	1	132.94	CONNECTOR, INLINE–TO I/P HARN (16 WAY MALE GT150 (W/ LEADS)) (AC DELCO #PT1416)
02	Y O/6 ELEC R/CON MIR (DD0), ELEC R/CON HTD MIR (DL8)	12101832	1	46.41	CONNECTOR, INLINE–TO I/P HARN (BLUE) (10–WAY F) (W/LEADS) (AC PT224) (02 535) (AC DELCO #PT224)
02	Y O/8 ELEC R/CON MIR (DD0), ELEC R/CON HTD MIR (DL8)	15305800	2	30.36	CONNECTOR, INLINE–TO I/P HARN (6–WAY F W/LEADS) (13 090) (AC–DELCO #PT1032)
02	YY37	12117372	1	72.69	CONNECTOR, INLINE–TO I/P HARN (BLACK) (10–WAY M) (AC–DELCO #PT505)
97–00	Y 5 7/3 (LB1)	12102747	1	21.73	CONNECTOR, INLINE–TO KNOCK SEN (BLACK) (2–WAY F W/LEADS) (03 570) (AC–DELCO #PT374)
01–02	Y	12085496	1	27.30	CONNECTOR INLINE - TO KNOCK SEN (BLACK) (3 WAY F) (W/LEADS (02 535) (AC DELCO #PT117)
97–02	Y	12102747	1	21.73	CONNECTOR INLINE TO P/S ASST MOT (BLACK) (2 WAY F W/LEADS) (03 570) (AC DELCO #PT374)
97–02	Y	12085536	1	29 86	CONNECTOR, INLINE TO STRG COL HARN (BLACK) (4 WAY M) (W/LEADS) (02 535) (AC DELCO #PT144)
97–02	Y	12092246	1	1 73	CONNECTOR INLINE TO STRG COL HARN (21 WAY M) (W/O LEADS)
97–02	Y	12125070	1	36 19	CONNECTOR INLINE TO STRG COL HARN (6 WAY F W/LEADS) (00 172) (AC DELCO #PT600)
98–02	Y	12016206	1	16 36	CONNECTOR INLINE TO STRG COL HARN (BLACK) (4 WAY M) (02 535)

cardiagn.com

2.530 CONNECTOR – COVER – INSULATOR – PLUG – SEAL, Chassis Electrical(Con't)

98–02	Y	16305872	1	33.15	CONNECTOR, INLINE–TO STRG COL HARN (RR) (BLACK) (6–WAY M W/LEADS) (13.100) (AC–DELCO #PT1013)
99–02	Y	12085535	1	18.01	CONNECTOR, INLINE–TO STRG COL HARN (TO TELESCOPING MOTOR) (2–WAY F W/LEADS W/INDEX TAB OTR EDGE OF CAVITY B) (02 535) (AC–DELCO #PT146)
99–02	Y07–67	12101864	1	18.16	CONNECTOR, INLINE–TO STRG COL HARN (BLACK) (3–WAY F W/LEADS) (02.535) (AC–DELCO #PT256)
99–02	Y07–67	12117322	1	22.64	CONNECTOR, INLINE–TO STRG COL HARN (3–WAY M) (09.709) (AC–DELCO #PT455)
02	YY67 4–SPD A/TRANS (M30), A/C FRT AUTO/AUX CONT (CJ2), T&T WHL (N37), (EXC TAIL & S/LP (T89) (EXPORT)	12085535	1	18.01	CONNECTOR, INLINE–TO STRG COL HARN (TO TELESCOPING MOTOR) (2–WAY F W/LEADS W/INDEX TAB OTR EDGE OF CAVITY B) (02.535) (AC–DELCO #PT146)
02	YY67 4–SPD A/TRANS (M30), A/C FRT AUTO/AUX CONT (CJ2), T&T WHL (N37), (EXC TAIL & S/LP (T89) (EXPORT)	12085536	1	29.88	CONNECTOR INLINE–TO STRG COL HARN (BLACK) (4 - WAY M) (W/LEADS) (02 535) (AC–DELCO #PT144)
02	YY67 4–SPD A/TRANS (M30), A/C FRT AUTO/AUX CONT (CJ2), T&T WHL (N37), (EXC TAIL & S/LP (T89) (EXPORT)	12092248	1	1.73	CONNECTOR, INLINE–TO STRG COL HARN (23 - WAY M) (W/O LEADS)
02	YY67 4–SPD A/TRANS (M30), A/C FRT AUTO/AUX CONT (CJ2), T&T WHL (N37), (EXC TAIL & S/LP (T89) (EXPORT)	12101864	1	18.16	CONNECTOR, INLINE–TO STRG COL HARN (BLACK) (3 –WAY F W/LEADS) (02 535) (AC–DELCO #PT256)
02	YY67 4–SPD A/TRANS (M30), A/C FRT AUTO/AUX CONT (CJ2), T&T WHL (N37), (EXC TAIL & S/LP (T89) (EXPORT)	12117322	1	22.64	CONNECTOR, INLINE–TO STRG COL HARN (3 –WAY M) (09.709) (AC–DELCO #PT455)
02	YY67	12125678	1	35.19	CONNECTOR, INLINE –TO STRG COL HARN (6 –WAY F, W/LEADS) (09 172) (AC–DELCO #PT590)
02	YY67 4–SPD A/TRANS (M30), A/C FRT AUTO/AUX CONT (CJ2), T&T WHL (N37), (EXC TAIL & S/LP (T89) (EXPORT)	16305872	1	33 15	CONNECTOR, INLINE–TO STRG COL HARN (RR) (BLACK) (6 –WAY M W/LEADS) (13 100) (AC–DELCO #PT1013)
97–02	Y	12117270	1	56.37	CONNECTOR, INLINE–TO TRANS (8 –WAY M W/LEADS) (AC–DELCO #PT443)
97–00	Y	12160493	1	16.30	CONNECTOR, INLINE–TO TRANS (14 –WAY F) (W/O LEADS) (M.P 100W) (04 115) (CAN ALSO REPL 13 –WAY CONN)
97–02	Y 6–SPD M/TRANS (MM6), 4–SPD A/TRANS (M30)	12160542	1	2 50	CONNECTOR INLINE–TO TRANS (20 –WAY M W/O LEADS)
97	Y 4–SPD A/TRANS (M30)	12160783	1	5 61	CONNECTOR INLINE–TO TRANS (20 –WAY M)
97–01	Y	16306867	1	78 54	CONNECTOR INLINE–TO TRANS (14 –WAY F) (W/LEADS) (ACTUALLY 20 –WAY W/6 CAVITIES MOLDED) (AC–DELCO #PT1008)

cardiagn.com

2.530 CONNECTOR – COVER – INSULATOR – PLUG – SEAL, Chassis Electrical(Con't)

98–99	Y	12085485	1	16.67	CONNECTOR, INLINE–TO TRANS (BLACK) (2–WAY M) (W/LEADS) (02.530) (AC–DELCO #PT107)
98	Y67	12160280	2	2.50	CONNECTOR, INLINE–TO TRANS (20–WAY F) (W/O LEADS)
99–02	Y	12117372	1	72.69	CONNECTOR, INLINE–TO TRANS (BLACK) (10–WAY M) (AC–DELCO #PT505)
99–00	Y	12125676	1	66.81	CONNECTOR, INLINE–TO TRANS (BLACK) (10–WAY F) (W/LEADS) (AC–DELCO #PT588)
97–00	Y	12117372	1	72.69	CONNECTOR, INLINE–TO TRANS HARN (BLACK) (10–WAY M) (AC–DELCO #PT505)
97–00	Y	12125676	1	69.87	CONNECTOR, INLINE–TO TRANS HARN (GRAY) (10–WAY F) (W/LEADS) (AC–DELCO #PT587)
97–98	Y	12160280	1	2.50	CONNECTOR, INLINE–TO TRANS HARN (20–WAY F) (W/O LEADS)
97–98	Y	12162343	2	.58	CONNECTOR, INLINE–TO TRANS HARN (2–WAY M W/O LEADS) (04 720)
98	Y	12125676	1	66.81	CONNECTOR, INLINE–TO TRANS HARN (BLACK) (10–WAY F) (W/LEADS) (AC–DELCO #PT588)
98	Y	12160542	1	2.50	CONNECTOR, INLINE–TO TRANS HARN (20–WAY M, W/O LEADS)
99–02	Y	12162343	1	.58	CONNECTOR, INLINE–TO TRANS HARN (2–WAY M W/O LEADS) (04 720)
01–02	YY	16326842	1		CONNECTOR, INLINE–TO TRANS HARN (10–WAY F) (13 100)
01–02	YY07–67	16326847	1		CONNECTOR, INLINE–TO TRANS HARN (10–WAY M) (02.483)
97–99	Y	12177205	1	5.71	CONNECTOR, PWR DISTR BLK (68–WAY F, M/P 280 FLXLK, W/O LEADS, GRAY)
97–98	Y	12177206	1	5.71	CONNECTOR, PWR DISTR BLK (RR) (BLACK) (68–WAY F, M/P 280 FLXLK, W/O LEADS)
97–98	Y	12177207	1	5.71	CONNECTOR, PWR DISTR BLK (GRAY) (68–WAY F, M/P 280 FLXLK, W/O LEADS)
97–02	Y	16303812	1	5.53	CONNECTOR, PWR DISTR BLK (GRAY) (68–WAY F W/O LEADS)
97–99	Y	16303813	1	5.53	CONNECTOR, PWR DISTR BLK (FRT) (BLACK) (68–WAY F M/P 280 FLXLK W/O LEADS)
97–98	Y	16303814	1	5.53	CONNECTOR, PWR DISTR BLK (BROWN) (68–WAY F, M/P 280 FLXLK W/O LEADS)
97–98	Y	16305086	1	20.01	CONNECTOR, PWR DISTR BLK (GRAY) (2–WAY F MAXI FUSE CONN W/LEADS) (AC–DELCO #PT1028)
97–99	Y	16305020	1	33.42	CONNECTOR, PWR DISTR BLK (GREEN) (2–WAY F W/LEADS) (AC–DELCO #PT1109)
98	Y	16305028	1	33.42	CONNECTOR, PWR DISTR BLK (BLACK) (2–WAY F MAXI FUSE W/LEADS) (AC–DELCO #PT1107)

cardiagn.com

2.530 CONNECTOR – COVER – INSULATOR – PLUG – SEAL, Chassis Electrical(Con't)

98–99	Y	15305851	1	20.91	CONNECTOR, PWR DISTR BLK (2–WAY F MAXI FUSE W/LEADS) (AC–DELCO #PT1190)
01–02	Y	12177205	1	5.71	CONNECTOR, PWR DISTR BLK (68–WAY F, M/P 280 FLXLK, W/O LEADS, GRAY)
01–02	Y	15303513	1	5.53	CONNECTOR, PWR DISTR BLK (FRT) (BLACK) (68–WAY F M/P 280 FLXLK W/O LEADS)
01–02	YY	15328719	1	5.53	CONNECTOR, PWR DISTR BLK (68–WAY FEMALE M/P 280 FLXLK T3 (W/O LEADS) .) (GRAY) (68–WAY FEMALE M/P 280 FLXLK T3 W/O LEADS) (13.100)
01–02	YY67	12177206	1	5.71	CONNECTOR, PWR DISTR BLK (68–WAY FEMALE M/P 280 FLXLK (W/O LEADS) (BLACK) .) (BLACK) (68–WAY F, M/P 280 FLXLK, W/O LEADS)
01–02	YY67	12177207	1	5.71	CONNECTOR, PWR DISTR BLK (68–WAY FEMALE M/P 280 FLXLK (W/O LEADS) (GRAY) .) (GRAY) (68–WAY F, M/P 280 FLXLK, W/O LEADS)
01–02	YY67	15305886	1	20.91	CONNECTOR, PWR DISTR BLK (2–WAY FEMALE MAX 1 FUSE CONN (W/LEADS) GRAY.) (GRAY) (2–WAY F MAXI FUSE CONN W/LEADS) (AC–DELCO #PT1028)
01–02	YY67	15305920	1	33.42	CONNECTOR, PWR DISTR BLK (2–WAY FEMALE MAX 1 FUSE CONN (W/LEADS) .) (GREEN) (2–WAY F W/LEADS) (AC–DELCO #PT1169)
01–02	YY67	15305981	1	20.91	CONNECTOR, PWR DISTR BLK (2–WAY FEMALE MAX1–FUSE CONNECTOR (W/LEADS)) (2–WAY F MAXI FUSE W/LEADS) (AC–DELCO #PT1190)
07	Y 4–SPD A/TRANS (M30)	12162201	1	.58	CONNECTOR, SOL–A SHFT VLV (NATURAL) (2–WAY F) (W/O LEADS)
00–02	Y	12101857	1	10.28	CONNECTOR, SOL–A SHFT VLV (WHITE) (2–WAY F, W/LEADS) (02 836) (AC–DELCO #PT240)
07–02	Y	15305201	1	1.48	CONNECTOR WRG HARN (12 WAY F GT 280, W/O UPR CONN/CVR, W/O LEADS, MATES W/15305202 CONN/CVR) (12 WAY F)
07–02	YY67	15305014	1	60.06	CONNECTOR, WRG HARN (12 WAY FEMALE GT 150 (W/LEADS)) (12 WAY F) (W/LEADS AND CAP) (02 440) (AC–DELCO #PT1101)
01–02	Y	15305202	1	2.75	CONNECTOR, WRG HARN
02	YY67 4–SPD A/TRANS (M30) A/C LRT AUTO/AUX CONT (CJ2), T&T WHL (N37), (EXC TAIL & S LP (T80) (EXPORT)	15305202	1	2.75	CONNECTOR, WRG HARN (ACTS AS A COVER FOR MATING PART 15305201)
02	YY67 4–SPD A TRANS (M30), A/C LRT AUTO/AUX CONT (CJ2), T&T WHL (N37), (EXC TAIL & S LP (T80) (EXPORT)	15305014	1	60.06	CONNECTOR WRG HARN (12 WAY FEMALE GT 150 (W/LEADS)) (12 WAY F) (W/LEADS AND CAP) (02 440) (AC–DELCO #PT1101)

cardiagn.com

2.530 CONNECTOR – COVER – INSULATOR – PLUG – SEAL, Chassis Electrical(Con't)

	*EXPORT***************EXPORT***************EXPORT***************EXPORT***************EXPORT*				
02	YY07–67 SIG & MKR LP (T90) (EXPORT)	12117271	1	59.43	CONNECTOR, INLINE–TO FWD LP HARN (WHITE) (8–WAY F W/LEADS) (02.535) (AC–DELCO #PT444)
99	Y 6–SPD M/TRANS (MM6), EUROPEAN PROVISIONS (VD1) (EXPORT)	12160542	1	2.50	CONNECTOR, INLINE–TO TRANS HARN (20–WAY M, W/O LEADS)
99	Y 6–SPD M/TRANS (MM6), CHASSIS, REALTIME DAMPING (F45), EUROPEAN PROVISIONS (VD1) (EXPORT)	15305928	1	33.42	CONNECTOR, PWR DISTR BLK (BLACK) (2–WAY F, MAXI FUSE, W/LEADS) (AC–DELCO #PT1187)

2.559 BOLT – CAP – CLIP – COVER – GASKET – RETAINER – SHIELD – SPACER – STRAP – STUD, Chassis/Engine Wiring Harness

97–98	Y (EXC LEADED FUEL EMIS EXPORT (NM8)	12555072	6	3.33	CLIP, OXY SEN LEAD
00–02	Y	12581498	1	3.33	CLIP, SECD AIR INJN PMP WRG HARN
97–98	Y	26061964	1	8.55	SPACER, DA WRG HARN CDT
99–02	Y07–67 (EXC T&T WHL (N37)	26061964	1	8.55	SPACER, DA WRG HARN CDT
99–02	Y37	26061964	1	8.55	SPACER, DA WRG HARN CDT
97–98	Y	10278878	6	.29	STUD, WRG HARN GND
99–00	Y (1ST DES)	10278879	6	.29	STUD, WRG HARN GND (1ST DSN STUD M6X1X25, FINISH COPPER FLASH, 2ND DSN 11518182)
99–00	Y (2ND DES)	11518182	6		STUD, WRG HARN GND (2ND DSN STUD–WELD M6X1X25, FINISH 6280, 1ST DSN 10278878)
01–02	YY37–67 (1ST DES)	10278878	6	.29	STUD, WRG HARN GND (1ST DSN STUD M6X1X25, FINISH COPPER FLASH, 2ND DSN 11518182)
01–02	YY37–67 (2ND DES)	11518182	6		STUD, WRG HARN GND (2ND DSN STUD–WELD M6X1X25, FINISH 6280, 1ST DSN 10278878)
	*EXPORT***************EXPORT***************EXPORT***************EXPORT***************EXPORT*				
97–98	Y LEADED FUEL EMIS EXPORT (NM8)	12191286	2	3.33	CAP, OXY SEN WRG HARN CONN (2–WAY) (W/O LEADS)
99–02	Y LEADED FUEL EXPORT EMIS (NM2)	12191286	2	3.33	CAP, OXY SEN WRG HARN CONN (2–WAY) (W/O LEADS)
99	Y JAPANESE EMISSION (NA3), EUROPEAN EMISSION (NA7), CALIF EMIS, TIER 1 (NB6), FED EMIS SYS (NF2)	12555072	6	3.33	CLIP, OXY SEN LEAD
00	Y JAPANESE EMISSION (NA3), EUROPEAN EMISSION (NA7), CALIF EMIS LEV (NC1), FED EMIS SYS (NF2)	12555072	6	3.33	CLIP, OXY SEN LEAD
01–02	Y JAPANESE EMISSION (NA3), CALIF EMIS LEV (NC1), FEDERAL EMIS NLEV (NF7), EMISSION SYSTEM, EEC 00 (NT3)	12555072	6	3.33	CLIP, OXY SEN LEAD
97–98	Y LEADED FUEL EMIS EXPORT (NM8)	12124742	2	8.00	COVER, ENG WRG HARN
99–02	Y LEADED FUEL EXPORT EMIS (NM2)	12124742	2	8.00	COVER, ENG WRG HARN

2.895 BOLT – SWITCH, Turn Signal Lamp

97–02	Y	26030497	4	3.38	BOLT, TBIG SW (M5X 8X16) (PAN HD TORX TAP) (06 760)

cardiagn.com

2.896 CAM, Turn Signal Switch Cancelling

97-02	Y	26044739	1	5.42	CAM, T/SIG SW CANC

3.670 CONNECTOR – LABEL – MODULE – RELAY – SOLENOID – VALVE, Emission Control System

97-99	Y	12167308	2	22.17	CONNECTOR, MDL-PWRT CONT (80-WAY F) (USE TERM 12084912 18 GA & TERM 12084913 20 GA,
01-02	Y	12167308	2	22.17	CONNECTOR, MDL-PWRT CONT (80-WAY F) (USE TERM 12084912 18 GA & TERM 12084913 20 GA)
97-02	Y	12191065	1	3.33	CONNECTOR, MDL-THROT ACTR CONT (TO ENG HARNESS) (16-WAY F, W/O LEADS, M/P 100W)
98	Y FRT ABS BRAKE LOC (JAG)	12116247	1	20.05	CONNECTOR, MDL-THROT ACTR CONT (BLACK) (2-WAY M) (W/LEADS) (13.090) (AC-DELCO #PT288)
98-02	Y	12125676	2	66.61	CONNECTOR, MDL-THROT ACTR CONT (TO I/P HARNESS) (BLACK) (10-WAY F) (W/LEADS) (02.530) (AC-DELCO #PT588)
99-00	Y	12116247	1	20.05	CONNECTOR, SOL-SECD AIR INJN BL VLV (BLACK) (2-WAY M) (W/LEADS) (13.090) (AC-DELCO #PT288)
00	Y	12102747	1	21.73	CONNECTOR, SOL-SECD AIR INJN BYPASS VLV (BLACK) (2-WAY F W/LEADS) (AC-DELCO #PT374)
01-02	YY07-67	12102747	1	21.73	CONNECTOR, SOL-SECD AIR INJN BYPASS VLV (BLACK) (2-WAY F W/LEADS) (AC-DELCO #PT374)
01	Y 5 7G (LS1)	12664047	1	8.76	LABEL, VEH EMIS CONT INFO (NYB) (08.808)
97-00	Y 5 7G (LS1), (EXC SIG & MKR LP (T90) (EXPORT)	12088567	1	16.46	RELAY, SECD AIR INJN PUMP (GRAY) (4-WAY) (09.277) (AC-DELCO #15-8571)
01-02	Y	12088567	1	16.46	RELAY, SECD AIR INJN PUMP (GRAY) (4-WAY) (09.277) (AC-DELCO #15-8571)

3.883 SWITCH, Cruise Control Selector

97-02	Y	26075870	1	213.71	SWITCH, HDLP & T/SIG & CRCONT (W/LVR) (02.486) (AC-DELCO #D1512G)

4.010 BOLT, Transmission Shift Control Lever (AUTOMATIC)

99-00	Y T&T WHL (N37)	26020231	3	6.25	BOLT, TRANS CONT LVR BOWL PLT (GRAY) (M6X1.0X14.0)
01-02	Y07-07 6-SPD M/TRANS (MM6), T&T WHL (N37)	26020231	3	6.25	BOLT, TRANS CONT LVR BOWL PLT (GRAY) (M6X1.0X14.0)
01-02	Y07-07 4-SPD A/TRANS (M30), T&T WHL (N37)	26020231	3	6.25	BOLT, TRANS CONT LVR BOWL PLT (GRAY) (M6X1.0X14.0)

4.665 BOLT – BOOT – BRACKET – DUCT – HARDWARE KIT – PIN – SCOOP – SEAL – WASHER, Wheel Brake Cylinder/Caliper

97-02	Y	10208976	LH	21.36	DUCT, FRT BRK CLPR CLG (POSN #1)
97-02	Y	10208977	RH	21.36	DUCT, FRT BRK CLPR CLG (POSN #2)
01-02	Y37 ANTILOCK DISC BRK (JL9)	10428976	LH		DUCT, RR BRK CLPR CLG
01-02	Y37 ANTILOCK DISC BRK (JL9)	10428977	RH		DUCT, RR BRK CLPR CLG (04.675)
01-02	Y37	10440968	RH	73.50	SCOOP, RR BRK CLPR CLG AIR
01-02	Y37	10440969	LH	73.50	SCOOP, RR BRK CLPR CLG AIR

cardiagn.com

4.681 BOLT – BRACKET – GASKET, Hydraulic Brake Hose

97–02	Y	10281416	2	3.50	BRACKET, FRT BRK HOSE
97–02	Y	10281416	2	3.50	BRACKET, RR BRK HOSE

4.710 BOLT – BRACKET – CONNECTOR – SENSOR – SWITCH, Electronic Brake Control

Note: AT TIMES THE BRAKE SENSOR IS SERVICED ONLY AS PART OF THE REAR WHEEL HUB ASSEMBLY LOCATED IN GROUP 5.806

98–00	Y	12102748	1	23.93	CONNECTOR, SEN–BRK PRESS MOD VLV PRESS (BLACK) (3–WAY F) (W/LEADS) (02.535) (AC–DELCO #PT375)
98	Y07–67 FRT ABS BRAKE LOC (JAG)	12102748	1	23.93	CONNECTOR, SEN–BRK PRESS MOD VLV PRESS (BLACK) (3–WAY F) (W/LEADS) (02.535) (AC–DELCO #PT375)
98–02	Y	12146121	1	1.58	CONNECTOR, SEN–VEH LATL (3–WAY F) (02.170)
02	Y 4–SPD A/TRANS (M30), A/C FRT AUTO/AUX CONT (CJ2), T&T WHL (N37), (EXC TAIL & S/LP (T89) (EXPORT)	12146121	1	1.58	CONNECTOR, SEN–VEH LATL (3–WAY F) (02.170)
97–02	Y	12102632	1	21.83	CONNECTOR, SW–ELEK TRACT CONT (BLACK) (6–WAY F) (W/LEADS) (09.656) (AC–DELCO #PT319)
02	YY67 4–SPD A/TRANS (M30), A/C FRT AUTO/AUX CONT (CJ2), T&T WHL (N37), (EXC TAIL & S/LP (T89) (EXPORT)	12102632	1	21.83	CONNECTOR, SW–ELEK TRACT CONT (BLACK) (6–WAY F) (W/LEADS) (09.656) (AC–DELCO #PT319)
97–02	Y	11516210	1	21.90	SWITCH, ELEK BRK CONT BRK PED (W/ S/LP SW)
97	Y (EXC CHASSIS REALTIME DAMPING (F45)	12135154	1	42.00	SWITCH, ELEK TRAC CONT (W/ASR, W/O RTD)
98–99	Y (EXC CHASSIS, REALTIME DAMPING (F45), ACTIVE BRAKE CTL (JL4)	12135154	1	42.00	SWITCH, ELEK TRAC CONT
98–99	Y ACTIVE BRAKE CTL (JL4), (EXC CHASSIS, REALTIME DAMPING (F45)	12198726	1	42.00	SWITCH, ELEK TRAC CONT
00	Y (C88), (EXC CHASSIS, REALTIME DAMPING (F45), ACTIVE BRAKE CTL (JL4)	10440629	1	67.50	SWITCH, ELEK TRAC CONT
00	Y ACTIVE BRAKE CTL (JL4), (EXC C88), CHASSIS, REALTIME DAMPING (F45)	10440631	1		SWITCH ELEK TRAC CONT
00	Y (EXC C88), CHASSIS, REALTIME DAMPING (F45), ACTIVE BRAKE CTL (JL4)	12135154	1	42.00	SWITCH, ELEK TRAC CONT
01	Y07–67 ACTIVE BRAKE CTL (JL4) (EXC C88), CHASSIS, REALTIME DAMPING (F45)	10440631	1		SWITCH, ELEK TRAC CONT
01	Y37 (EXC C88)	10440631	1		SWITCH, ELEK TRAC CONT
02	Y (EXC C88), CHASSIS, REALTIME DAMPING (F45)	10440631	1		SWITCH, ELEK TRAC CONT
	EXPORT	*EXPORT*	*EXPORT*	*EXPORT*	*EXPORT*
00–01	Y07–67 ACTIVE BRAKE CTL (JL4), (EXC CHASSIS, REALTIME DAMPING (F45), (C88)	12198726	1	42.00	SWITCH, ELEK TRAC CONT
02	Y (EXC CHASSIS, REALTIME DAMPING (F45), (C88)	12198726	1	42.00	SWITCH ELEK TRAC CONT

cardiagn.com

4.720 BOLT -- CONNECTOR – CONNECTOR KIT – HARNESS – MODULE – PLATE – RELAY – RETAINER – WIRE, Electronic Brake Control

97–02	Y CHASSIS, REALTIME DAMPING (F45)	14090618	1	8.08	PLATE, ELEK BRK CONT WRG HARN GROM TAP (03.675)
97	Y (EXC SIG & MKR LP (T90) (EXPORT)	12088567	1	16.45	RELAY, ELEK BRK CONT (GRAY) (4–WAY) (09.277) (AC–DELCO #15–8571)
98	Y37 (EXC ACTIVE BRAKE CTL (JL4), P/S (VARIABLE) (N77), FRT FOG LP (T96)	12129232	1	3.50	RETAINER, ELEK BRK CONT WRG HARN MDL CONN (32–WAY FEMALE MIC/P 100W RETAINER, CLEAR)

4.785 BRACKET – CLIP – PLATE – RETAINER – SEAL, Parking Brake Cable

97–02	Y	10262949	LH	3.50	BRACKET, PARK BRK CBL
97–02	Y	10262950	RH	3.50	BRACKET, PARK BRK CBL
97–02	Y	10256639	1	4.40	BRACKET, PARK BRK CBL EQLZR
97–02	Y	10281421	2	3.50	CLIP, PARK BRK RR CBL
97–02	Y	10404603	2	1.70	PLATE, PARK BRK RR CBL CLIP STUD
98–02	Y	10415038	2	3.45	SEAL, PARK BRK RR CBL CLIP STUD PLT (15.222)

5.149 BRAKE KIT, Parking Brake Shoe

97–98	Y	12530691	2	151.00	BRAKE KIT, RR PARK
99–02	Y	12455801	2	138.00	BRAKE KIT, RR PARK

5.380 BRACKET -- REINFORCEMENT, Rear Axle Control Arm

97–02	Y	10281365	LH	7.19	BRACKET, RR SUSP UPR CONT ARM (#102 FRT)
97–02	Y	10281366	RH	7.19	BRACKET, RR SUSP UPR CONT ARM (#102 FRT)
97–02	Y	10281367	LH	7.19	BRACKET, RR SUSP UPR CONT ARM (RR)
97–02	Y	10281368	RH	6.55	BRACKET, RR SUSP UPR CONT ARM (RR)
97–02	Y	10280564	2	2.75	REINFORCEMENT, RR SUSP CONT ARM BRKT

5.382 ARM – CAM, Rear Axle Control Arm

97–02	Y	10233635	LH	181.00	ARM, RR SUSP LWR CONT (WITH LWR BALL STUD) (PERM MOLD ALUM)
97–02	Y	10233636	RH	181.00	ARM, RR SUSP LWR CONT (PERM MOLD ALUM)
97–02	Y	10233620	LH	93.25	ARM, RR SUSP UPR CONT (COMPOSITE)
97–02	Y	10233621	RH	93.25	ARM, RR SUSP UPR CONT (COMPOSITE)
97–02	Y	10254818	2	1.95	CAM, RR SUSP LWR CONT ARM ADJ (FWD POSN) (05 381)

5.383 BOLT – NUT, Rear Axle Control Arm

97–02	Y	10200007	2	7.19	BOLT, RR SUSP LWR CONT ARM (RR POSN #1) (00 002)
97–02	Y	10254819	2	4.95	BOLT, RR SUSP LWR CONT ARM (FWD POSN #2) (138 6MM LGXM14X2 6)
97–02	Y	11515816	4	3.33	BOLT, RR SUSP UPR CONT ARM (M12X1 75X80) (08 900)

cardiagn.com

5.416 BOOT – CLAMP – END KIT – LINK KIT – NUT, Rear Axle

97–02	Y	07844424	1	16.30	BOOT, RR SUSP ADJ LINK (RR TOE LINK SEAL)
97–02	Y	07844100	1	2.00	CLAMP, RR SUSP ADJ LINK BOOT (ROD BOOT, BLK OX COATING) (19MM)
97–02	Y	26036823	1	2.60	CLAMP, RR SUSP ADJ LINK BOOT (RETAINING SEAL) (44MM)
97–02	Y	26058600	2	47.50	END KIT, RR SUSP ADJ LINK OTR (05.415)
97	Y	26058599	1	48.50	LINK KIT, RR SUSP ADJ
98–02	Y	26072661	2	48.50	LINK KIT, RR SUSP ADJ
97–02	Y	03537772	2	*1.45	NUT, RR SUSP ADJ LINK (OTR) (POSN #1) (M12.0X1.75X10.6) (08.917)
97–02	Y	11516383	2	*1.24	NUT, RR SUSP ADJ LINK (INR) (POSN #2) (16X2X18.9 34.2OD) (08.917)
97–02	Y	26017267	2	7.78	NUT, RR SUSP ADJ LINK (M14X1.5X11, 510M (5), ZC) (06.526)

5.420 SHAFT, Rear Axle Drive

97–02	Y	88893900	1	242.25	SHAFT, R/AXL
97–02	Y	10226316	2	219.53	SHAFT, RR WHL DRV UJT

5.422 BEARING – LOCK – NUT – RING – SEAL, Rear Axle Shaft

97–02	Y	10257786	2	8.46	NUT, RR WHL DRV UJT SHF (M27X2X18) (HFH LOCK) (06.056) (AC–DELCO #36–4135)

5.428 BAND & CLIP KIT – JOINT KIT, Rear Axle U Joint

97–02	Y	12532157	2	71.25	BAND & CLIP KIT, RR SHF
97–02	Y	12532154	2	247.00	JOINT KIT, RR WHL DRV SHF INR
97–02	Y	12532153	2	247.08	JOINT KIT, RR WHL DRV SHF OTR

5.430 BOOT KIT, Rear Axle U Joint

97–02	Y	12532156	2	47.20	BOOT KIT, RR INR SHF
97–02	Y	12532155	2	47.20	BOOT KIT, RR OTR SHF

5.505 CARRIER, Differential, with Cap

97–02	Y 6–SPD M/TRANS (MM6)	12561769	1	1364.97	CARRIER, DIFF (W/GEARS) (3.42 RATIO)
97–02	Y 4–SPD A/TRANS (M30) 2.73R (GU2)	12554837	1	1398.26	CARRIER, DIFF (2.73 RATIO) (W/GEARS) (05.546)
97–02	Y 5.7G (LS1), 4–SPD A/TRANS (M30), 3.15R (G90)	12556313	1	1392.02	CARRIER, DIFF (3.15 RATIO)
01	YY37 MANUAL 6 SPD O/D TRANS, TREMEC (M12), 3.42R (GU6)	12561553	1	1351.68	CARRIER, DIFF
02	YY37 5.7S (LS6), MANUAL 6 SPD O/D TRANS, TREMEC (M12), 3.42R (GU6)	12572683	1		CARRIER, DIFF

5.806 KNUCKLE – NUT, Rear Wheel

97–02	Y	10237238	LH	141.49	KNUCKLE, RR SUSP (COMMON KNUCKLE FOR RT/FRT & LT/RR) (06.020)
97–02	Y	10237239	RH	141.49	KNUCKLE, RR SUSP (COMMON KNUCKLE FOR LT/FRT & RT/RR) (06.020)

cardiagn.com

5.806 KNUCKLE – NUT, Rear Wheel(Con't)

97–02	Y	03537772	2	*1.45	NUT, RR SUSP KNU (UPR BALL STUD, POSN #2) (M12.0X1.75X10.6) (08.917)
97–02	Y	10282253	2	3.33	NUT, RR SUSP KNU (LWR BALL STUD, POSN #1) (M14X2.0 6H THD) (06.164)

5.812 BOLT – STUD, Hub or Drum, Front and Rear Wheel

97–02	Y	10414261	6	3.33	BOLT, FRT WHL HUB

5.816 BOLT, Rear Axle Shaft Bearing

97–02	Y	10414261	6	3.33	BOLT, RR WHL HUB (05 812)

5.855 BEARING, Rear Wheel

97–02	Y	07470571	2	668.00	BEARING, RR WHL (W/INTEGRAL SENSOR) (AC–DELCO #20–71)

10.163 BOLT – BRACKET – CONNECTOR – SWITCH, Windshield Wiper Control

01–02	YY07–67 4–SPD A/TRANS (M30). (EXC STRG COL (NP7) (EXPORT)	26052963	1	5.35	BRACKET, WSW & WSWA SW (02.895)
97–02	Y	26047377	1	149.91	SWITCH, WSW & WSWA (AC–DELCO #D6363D)
	*EXPORT**********EXPORT**********EXPORT******** ******EXPORT**********EXPORT*				
97–02	Y	26047377	1	149.91	SWITCH, WSW & WSWA (AC–DELCO #D6363D)

10.230 BAR – BRACKET – INSULATOR – NUT – REINFORCEMENT – RETAINER – SPACER, Instrument Panel

97–02	Y	10425866	1	141.00	BAR, I/P TIE (#47)
97–98	Y	10409654	1	120.00	BRACKET, I/P CTR SUPT
98–02	Y	10409133	1	3.45	BRACKET, I/P CTR SUPT
99–02	Y	10433229	1	118.00	BRACKET, I/P CTR SUPT
97	Y (94I)	10406526	RH	34.50	INSULATOR, I/P (RED)
97–02	Y (19I)	10409462	RH	34.50	INSULATOR, I/P (BLACK)
97–02	Y (92I)	10409463	RH	34.50	INSULATOR, I/P (PEWTER)
97–02	Y	10421513	LH	34.00	INSULATOR, I/P
98–99	Y07–67 (94I)	10406526	RH	34.50	INSULATOR, I/P (RED)
98–02	Y07–67 (67I)	10409465	RH	34.50	INSULATOR, I/P (OAK)
00	Y07–67 (70I)	10409466	RH	34.50	INSULATOR, I/P (RED)
01–02	Y (70I)	10409466	RH	34.50	INSULATOR, I/P (RED)
97–02	Y	10281487	2	*.69	NUT, I/P CTR SUPT BRKT (AT I/P CTR BRKT) (04.665)
97–02	Y	25536302	7	3.33	NUT, I/P CTR SUPT BRKT (4 2X1.41 TAPPING) (SPL) (03.430)
97–02	Y	10281487	10	*.69	NUT, I/P LWR TIE BAR (04.665)
97–02	Y	10290611	1	10.10	REINFORCEMENT, I/P TIE BAR (POSN #1)
97–02	Y	10290612	1	10.10	REINFORCEMENT, I/P TIE BAR (POSN #2)
98–02	Y	10279623	RH	*.54	RETAINER, I/P INSL (PEWTER) (14 640)
98–02	Y	10279623	LH	*.54	RETAINER, I/P INSL (PEWTER) (14 640)
97–02	Y	20538173	2	3.45	RETAINER, I/P TIE BAR (BLACK) (4 8 HOLE) (14 685)
97–02	Y	10149281	AR	3.45	SPACER, I/P (07.832)

cardiagn.com

10.235 BRACKET – NUT – PAD – PANEL – RETAINER, Instrument Panel Pad

97–02	Y	10289379	1	91.75	BRACKET, I/P DRVR KNEE BOLS (10.230)
97–02	Y	10289378	1	27.00	BRACKET, I/P DRVR KNEE BOLS OTR
97–02	Y	10282775	1	20.30	BRACKET, I/P PASS KNEE BOLS
97–02	Y	25536302	4	3.33	NUT, I/P DRVR KNEE BOLS BRKT (4.2X1.41 TAPPING) (SPL) (03.430)
97–02	Y	25536302	1	3.33	NUT, I/P DRVR KNEE BOLS OTR BRKT (4.2X1.41 TAPPING) (SPL) (03.430)
97	Y	10237960	4	.46	NUT, I/P PASS KNEE BOLS (M6X1.0) (10.512)
98–00	Y	10410398	4	*.51	NUT, I/P PASS KNEE BOLS (M6X1.0 ITR "D" THD) (10.512)
97–02	Y	17988488	6	*1.03	NUT, I/P UPR TR PAD (TO I/P) (M4.2X1.41) (PUSH–IN FOR 12MM SQ HOLE) (10.252)
97–02	Y	25536302	2	3.33	NUT, I/P UPR TR PAD (4.2X1.41 TAPPING) (SPL) (03.430)
97–02	Y (EXC HEAD UP DISPLAY (UV6)	10303150	1	745.00	PAD, I/P UPR TR (W/ OTLTS & DUCTS) (BLACK)
97–98	Y	10406513	1	745.00	PAD, I/P UPR TR (BLACK)
97–02	Y (EXC HEAD UP DISPLAY (UV6)	10443974	1	745.00	PAD, I/P UPR TR (LESS OTLTS & DUCTS) (BLACK)
99–02	Y HEAD UP DISPLAY (UV6)	10303149	1	745.00	PAD, I/P UPR TR (INCLS BEZELS, DUCT & OUTLETS) (BLACK)
99–00	Y (EXC HEAD UP DISPLAY (UV6)	10406513	1	745.00	PAD, I/P UPR TR (BLACK)
99–02	Y HEAD UP DISPLAY (UV6)	10443975	1	745.00	PAD, I/P UPR TR (LESS BEZELS, DUCT & OUTLETS) (BLACK)

10.252 BOLT – CLIP – GRILLE – NUT – PLATE, Instrument Panel Trim

97–02	Y	10195501	2	3.33	CLIP, ACSRY SW PNL (10.230)

10.485 BATTERY – BOLT – BRACKET – BULB – CONNECTOR – MODULE – NUT – RECEIVER – SHIELD – TRANSMITTER, Door Electric and Vacuum Locks

99	Y37	10281420	4	3.33	BOLT, DR LK & SI WDO RLY (10.268)
97–02	Y	10281420	4	3.33	BOLT, FRT S/D CONT MDL (10.268)
97–02	Y	10282800	1	4.35	BRACKET, R/CON DR LK RCVR
97–02	Y	12089527	2	2.35	CONNECTOR, MDL–FRT S/D CONT (GREEN) (6–WAY F) (16.263)
97–02	Y	12160773	4	.74	CONNECTOR, MDL–FRT S/D CONT (26–WAY F) (W/O LEADS)
97–02	Y	15305888	2	30.36	CONNECTOR, MDL–FRT S/D CONT (6–WAY F W/LEADS) (13.090) (AC–DELCO #PT1032)
01–02	Y 6–SPD M/TRANS (MM6), 4–SPD A/TRANS (M30)	12116247	1	20.05	CONNECTOR, MOT–DR LK ACTR (BLACK) (2–WAY M) (W/LEADS) (13.090) (AC–DELCO #PT288)
01–02	Y 5 7S (LS6), MANUAL 6 SPD O/D TRANS, TREMEC (M12)	12116247	1	20.05	CONNECTOR, MOT–DR LK ACTR (BLACK) (2–WAY M) (W/LEADS) (13.090) (AC–DELCO #PT288)
97–02	Y	12101856	2	18.83	CONNECTOR, SW–DR LK (GREEN) (2–WAY F, W/LEADS) (02.535) (AC–DELCO #PT248)
99	Y	09381399	1	331.59	MODULE, BODY CONT (02.560) (AC–DELCO #9381399)
00	Y	10304930	1	331.59	MODULE, BODY CONT (02.560) (AC–DELCO #10304930)
01–02	Y	10304931	1	331.59	MODULE, BODY CONT (02.560) (AC–DELCO #10304931)

cardiagn.com

10.485 BATTERY – BOLT – BRACKET – BULB – CONNECTOR – MODULE – NUT – RECEIVER – SHIELD – TRANSMITTER, Door Electric and Vacuum Locks(Con't)

97–99	Y	09352881	LH	218.00	MODULE, FRT S/D CONT (DRVR) (S/D LOCAL INTERFACE)
97–99	Y	09352891	RH	218.00	MODULE, FRT S/D CONT (PASS) (S/D LOCAL INTERFACE)
00–02	Y	09389689	LH	218.00	MODULE, FRT S/D CONT (DRVR) (S/D LOCAL INTERFACE)
00–02	Y	10435192	RH	218.00	MODULE, FRT S/D CONT (PASS) (S/D LOCAL INTERFACE)
97–02	Y	10295386	4	3.45	NUT, FRT S/D CONT MDL (M5 X .80) (SPECIAL AK SERIES) (14.683)

12.181 LID – PANEL – PLUG, Rear Compartment

97–02	Y07	10400238	1	383.00	PANEL, R/CMPT L/WDO

12.187 BOLT – BRACKET – RIVET – STRUT – STUD, Rear Hatch Window

97–02	Y07	15690531	2	*.52	RIVET, R/CMPT L/WDO STRUT BODY SI BRKT (FOR 3/16" HOLE W/ 1/4" GRIP) (09.665) (AC–DELCO #15690531)
97–98	Y07	16605493	2	3.33	RIVET, R/CMPT LID POP–UP ROD SPR SEAT (4.9X21) (12.966)
98–02	Y67	16605493	1	3.33	RIVET, R/CMPT LID POP–UP ROD SPR SEAT (4.9X21) (12.966)
99–02	Y37	16605493	2	3.33	RIVET, R/CMPT LID POP–UP ROD SPR SEAT (4.9X21) (12.966)

12.800 RETAINER – SCREEN, Cowl Top Vent Louver

97–02	Y	21075686	4	*.51	RETAINER, AIR INL SCRN (10.154)
97	Y	10247327	1	68.75	SCREEN, AIR INL (#86) (W/SEAL & FRM)
97	Y	10446063	1	68.75	SCREEN, AIR INL (#86)
98–02	Y	10446063	1	68.75	SCREEN, AIR INL (#86)

12.942 BAR – EXTENSION – PANEL – REINFORCEMENT, Rear Body Lock Pillar

97–00	Y	12369436	LH	80.50	PANEL, BODY L/PLR OTR (#54)
97–00	Y	12369437	RH	80.50	PANEL, BODY L/PLR OTR (#54)
01	Y (2ND DES)	12369436	LH	80.50	PANEL, BODY L/PLR OTR (#54) (CARS BUILT PRIOR TO LAST EIGHT DIGIT OF VIN 15117747;FOR 1ST DESIGN SEE 88951187)
01	Y (2ND DES)	12369437	RH	80.50	PANEL, BODY L/PLR OTR (#54) (CARS BUILT PRIOR TO LAST EIGHT DIGIT OF VIN 15117747;FOR 1ST DESIGN SEE 88951188)
01	Y (1ST DES)	88951187	LH	79.75	PANEL, BODY L/PLR OTR (#54) (CARS BUILT WITH AND AFTER THE LAST EIGHT DIGIT OF VIN 15117747;FOR 2ND DESIGN SEE 12369436)
01	Y (1ST DES)	88951188	RH	79.75	PANEL, BODY L/PLR OTR (#54) (CARS BUILT WITH AND AFTER THE LAST EIGHT DIGIT OF VIN 15117747;FOR 2ND DESIGN SEE 12369437)
02	Y	88951187	LH	79.75	PANEL, BODY L/PLR OTR (#54)
02	Y	88951188	RH	79.75	PANEL, BODY L/PLR OTR (#54)
98–02	Y67	10414164	LH	10.45	PANEL, BODY L/PLR OTR UPR
98–02	Y67	10414165	RH	10.45	PANEL, BODY L/PLR OTR UPR

cardiagn.com

12.980 BAR – BOLT – BRACE – BRACKET – EXTENSION – INSULATOR – PANEL KIT – PLATE – RAIL – REINFORCEMENT – SPACER – SUPPORT, Floor Pan

97–01	Y	10293680	RH	60.75	BRACE, FLR PNL TUN FRT
97–01	Y	10444631	LH	60.75	BRACE, FLR PNL TUN FRT
02	Y	10438452	RH	59.05	BRACE, FLR PNL TUN FRT (#35)
02	Y	10438453	LH	59.05	BRACE, FLR PNL TUN FRT (#35)
97–01	Y	10293681	LH	50.75	BRACE, FLR PNL TUN RR
97–01	Y	10293682	RH	50.75	BRACE, FLR PNL TUN RR
02	Y	10438455	LH		BRACE, FLR PNL TUN RR (#36)
02	Y	10438456	RH		BRACE, FLR PNL TUN RR (#36)
97–02	Y	10262059	LH	13.70	BRACE, U/B FRT S/RL UPR (07.039)
97–02	Y	10262060	RH	13.70	BRACE, U/B FRT S/RL UPR (07.039)
97–02	Y	10271958	1	25.00	BRACKET, DRVR F/RST
97–02	Y	10284285	LH	5.70	BRACKET, FLR PNL TUN PNL SI FRT
97–02	Y	10284286	RH	5.70	BRACKET, FLR PNL TUN PNL SI FRT
97–02	Y	10284287	LH	5.70	BRACKET, FLR PNL TUN PNL SI RR
97–02	Y	10284288	RH	5.70	BRACKET, FLR PNL TUN PNL SI RR
97–01	Y	10250149	LH	14.55	BRACKET, FLR PNL TUN REINF
97–01	Y	10250150	RH	14.55	BRACKET, FLR PNL TUN REINF
02	Y	10449844	LH	14.15	BRACKET, FLR PNL TUN REINF (#32)
02	Y	10449845	RH	14.15	BRACKET, FLR PNL TUN REINF (#32)
97–98	Y	10285633	1	12.95	INSULATOR, FLR PNL FRT
99–02	Y	10285633	1	12.95	INSULATOR, FLR PNL FRT (RH ONLY)
97–02	Y	20464593	1	12.90	INSULATOR, FLR PNL FRT CTR (54" WIDE, SOLD BY THE FOOT, CUT AS REQ) (15.492)
97–02	Y	12533430	LH	559.00	RAIL, U/B FRT SI (INCLUDES NUT 10281493)
97–02	Y	12533431	RH	559.00	RAIL, U/B FRT SI (INCLUDES NUT 10281493)
97–02	Y	12533432	LH	559.00	RAIL, U/B RR SI
97–02	Y	12533433	RH	559.00	RAIL, U/B RR SI
97–02	Y	12533434	LH	503.00	RAIL, U/B SI (CTR)
97–02	Y	12533435	RH	503.00	RAIL, U/B SI (CTR)
97–02	Y	10278039	1	3.33	SPACER, DRVR F/RST BRKT
97	Y	10253535	2	8.53	SPACER, U/B S/RL (#107) (RED)
97	Y	10257863	2	8.53	SPACER, U/B S/RL (#104) (BLUE)

12.986 BRACE, Body Rear End (Plastic Laminated)

97–02	Y	10263983	LH	7.80	BRACE, R/CMPT PNL (127.9X126.3X66.5)
97–02	Y	10299078	RH	7.80	BRACE, R/CMPT PNL (127.9X126.3X73.1)
99–02	Y	10424152	2		BRACE, R/CMPT PNL (57.0X70.0X147.0)

13.090 BOLT – CLIP – CONNECTOR - GROMMET – HARNESS – RETAINER – WIRE, Body Wiring

97–02	Y	21020633	4	3.33	CLIP, BODY FRT WRG HARN
97	Y07	21020632	11	3.33	CLIP, BODY RR WRG HARN
98–02	Y	21020632	7	3.33	CLIP, BODY RR WRG HARN
97	Y	21020632	11	3.33	CLIP, BODY WRG HARN
98	Y67	12085481	1	18.12	CONNECTOR, INLINE–TO F/TOP HARN (BLACK) (2–WAY M W/LEADS) (02.535) (AC–DELCO #PT103)

cardiagn.com

13.090 BOLT – CLIP – CONNECTOR – GROMMET – HARNESS – RETAINER – WIRE, Body Wiring(Con't)

98–00	Y67	12125621	1	15.46	CONNECTOR, INLINE–TO F/TOP HARN (2–WAY F) (W/LEADS) (12.243) (AC–DELCO #PT533)
01–02	YY67	12125621	1	15.46	CONNECTOR, INLINE–TO F/TOP HARN (2–WAY F) (W/LEADS) (12.243) (AC–DELCO #PT533)
97–02	Y	10412644	2	6.81	GROMMET, S/D WRG (LH & RH)
97–98	Y07	12189550	1	244.62	HARNESS, BODY FRT WRG
98	Y67 SPEAKER SYSTEM 6 (UZ6)	12189958	1	244.62	HARNESS, BODY FRT WRG
99–00	Y07 (EXC MULTIPLE CD PLYR (U1S)	12189597	1	244.62	HARNESS, BODY FRT WRG
99–00	Y07 MULTIPLE CD PLYR (U1S)	12189889	1	244.62	HARNESS, BODY FRT WRG
99–00	Y37 MULTIPLE CD PLYR (U1S)	12163772	1	244.62	HARNESS, BODY FRT WRG
99–00	Y37 (EXC MULTIPLE CD PLYR (U1S)	12189595	1	510.00	HARNESS, BODY FRT WRG
99–00	Y67 (EXC MULTIPLE CD PLYR (U1S)	12189599	1	244.62	HARNESS, BODY FRT WRG
99–00	Y67 MULTIPLE CD PLYR (U1S)	12189962	1	244.62	HARNESS, BODY FRT WRG
01–02	YY07 SPEAKER SYSTEM 6 (UZ6), (EXC MULTIPLE CD PLYR (U1S)	15329382	1		HARNESS, BODY FRT WRG
01–02	YY07 SPEAKER SYSTEM 6 (UZ6), MULTIPLE CD PLYR (U1S)	15329383	1	244.62	HARNESS, BODY FRT WRG
01–02	YY37	15329378	1		HARNESS, BODY FRT WRG
01–02	YY67 SPEAKER SYSTEM 6 (UZ6), (EXC MULTIPLE CD PLYR (U1S)	15329386	1	244.62	HARNESS, BODY FRT WRG
01–02	YY67 SPEAKER SYSTEM 6 (UZ6), MULTIPLE CD PLYR (U1S)	15329387	1	244.62	HARNESS, BODY FRT WRG
97–02	Y07 (EXC TAIL & S/LP (T89) (EXPORT) SPECIAL TAIL & S/LP (T93)	12130411	1	251.96	HARNESS, BODY RR WRG
98–99	Y67 (EXC TAIL & S/LP (T89) (EXPORT), SPECIAL TAIL & S/LP (T93)	12189532	1	526.79	HARNESS, BODY RR WRG
99	Y37 (EXC TAIL & S/LP (T89) (EXPORT), SPECIAL TAIL & S/LP (T93)	12189532	1	526.79	HARNESS, BODY RR WRG
00–02	Y07 SPECIAL TAIL & S/LP (T93), (EXC TAIL & S/LP (T89) (EXPORT)	12189885	1	526.79	HARNESS, BODY RR WRG
00–02	Y37–67 (EXC TAIL & S/LP (T89) (EXPORT), SPECIAL TAIL & S/LP (T93)	12189532	1	526.79	HARNESS, BODY RR WRG
00–02	Y37–67 SPECIAL TAIL & S/LP (T93), (EXC TAIL & S/LP (T89) (EXPORT)	12189534	1	526.79	HARNESS, BODY RR WRG
97–98	Y CONVENIENCE PKG (AAB), MAN RECL FRT BKT ST, DELUXE (AR9)	10410580	1	66.23	HARNESS, D/SEAT ADJR WRG
97	Y07 MAN RECL FRT BKT ST, DELUXE (AR9), (EXC CONVENIENCE PKG (AAB)	10410691	1	66.23	HARNESS, D/SEAT ADJR WRG
98–00	Y07–67 MAN RECL FRT BKT ST, DELUXE (AR9), (EXC CONVENIENCE PKG (AAB)	10410691	1	66.23	HARNESS, D/SEAT ADJR WRG
99–00	Y07–67 CONVENIENCE PKG (AAB), MAN RECL FRT BKT ST, DELUXE (AR9), (EXC T&T WHL (N37)	10410580	1	66.23	HARNESS, D/SEAT ADJR WRG
99–00	Y07–67 CONVENIENCE PKG (AAB), MAN RECL FRT BKT ST, DELUXE (AR9), T&T WHL (N37)	12455471	1	66.23	HARNESS, D/SEAT ADJR WRG
99–00	Y37 6–WAY PWR D/SEAT ADJR (AG1), MAN RECL FRT BKT ST, DELUXE (AR9), (EXC CONVENIENCE PKG (AAB)	10410691	1	66.23	HARNESS, D/SEAT ADJR WRG

cardiagn.com

13.090 BOLT – CLIP – CONNECTOR – GROMMET – HARNESS – RETAINER – WIRE, Body Wiring(Con't)

01–02	Y07–67 MAN RECL FRT BKT ST, DELUXE (AR9)	10410691	1	66.23	HARNESS, D/SEAT ADJR WRG
01	Y37 CONVENIENCE PKG (AAB), MAN RECL FRT BKT ST, DELUXE (AR9)	10410580	1	66.23	HARNESS, D/SEAT ADJR WRG
01–02	Y37 MAN RECL FRT BKT ST, DELUXE (AR9), (EXC CONVENIENCE PKG (AAB)	10410691	1	66.23	HARNESS, D/SEAT ADJR WRG
02	YY37 CONVENIENCE PKG (AAB), MAN RECL FRT BKT ST, DELUXE (AR9)	10410580	1	66.23	HARNESS, D/SEAT ADJR WRG
01–02	Y (EXC I/S RR VIEW MIR (DD8)	12189953	1		HARNESS, DM LP & I/S RR VIEW MIR RDG LP WRG
97–00	Y	12163314	LH	263.90	HARNESS, DR LK & O/S RRVIEW MIR MEMORY INTERFACE MDL WRG
97–99	Y	12163315	RH	263.90	HARNESS, DR LK & O/S RRVIEW MIR MEMORY INTERFACE MDL WRG
00–02	Y SPECIAL TAIL & S/LP (T93)	12163315	RH	263.90	HARNESS, DR LK & O/S RRVIEW MIR MEMORY INTERFACE MDL WRG
01–02	Y ELEC R/CON HTD MIR (DL8)	12163314	LH	263.90	HARNESS, DR LK & O/S RRVIEW MIR MEMORY INTERFACE MDL WRG
01–02	Y O/S ELEC R/CON MIR (DD0)	12189556	LH	263.90	HARNESS, DR LK & O/S RRVIEW MIR MEMORY INTERFACE MDL WRG
01–02	Y EUROPEAN PROVISIONS (VD1) (EXPORT)	10441963	1		HARNESS, KEYLESS ENTRY WRG (ELEMENT)
97	Y07 6–WAY PWR P/SEAT ADJR (AG2), MAN RECL FRT BKT ST, DELUXE (AR9)	10410692	1	53.81	HARNESS, P/SEAT ADJR WRG
98–01	Y07–67 6–WAY PWR P/SEAT ADJR (AG2), MAN RECL FRT BKT ST, DELUXE (AR9)	10410692	1	53.81	HARNESS, P/SEAT ADJR WRG
99–00	Y	12020833	1	*.76	RETAINER, BODY WRG HARN CONN (GRAY) (PUSH–IN) (1" LONG) (02.559)
97–02	Y	21020632	6	3.33	RETAINER, DR WRG HARN
98	Y67	12130419	1	59.12	WIRE, CONV TOP
	*EXPORT**************EXPORT**************EXPORT**************EXPORT**************EXPORT*				
97–01	Y07 TAIL & S/LP (T89) (EXPORT), (EXC SPECIAL TAIL & S/LP (T93)	12130413	1	244.62	HARNESS, BODY RR WRG
97–99	Y07 SPECIAL TAIL & S/LP (T93), (EXC TAIL & S/LP (T89) (EXPORT)	12189885	1	526.79	HARNESS, BODY RR WRG
98	Y67 TAIL & S/LP (T89) (EXPORT), (EXC SPECIAL TAIL & S/LP (T93)	12189533	1	526.79	HARNESS, BODY RR WRG
98–99	Y67 SPECIAL TAIL & S/LP (T93), (EXC TAIL & S/LP (T89) (EXPORT)	12189534	1	526.79	HARNESS, BODY RR WRG
99	Y37 SPECIAL TAIL & S/LP (T93), (EXC TAIL & S/LP (T89) (EXPORT)	12189534	1	526.79	HARNESS, BODY RR WRG
99–02	Y37–67 TAIL & S/LP (T89) (EXPORT). (EXC SPECIAL TAIL & S/LP (T93)	12189533	1	526.79	HARNESS, BODY RR WRG
99–02	Y EUROPEAN PROVISIONS (VD1) (EXPORT)	12020833	1	*.76	RETAINER, BODY FRT WRG HARN CONN (GRAY) (PUSH–IN) (1" LONG) (02.559)

cardiagn.com

14.865 BOLT – BRACKET – COIL – COIL KIT – CONNECTOR – HARNESS – INDICATOR – MODULE – NUT – RETAINER – SENSOR – SWITCH – SWITCH KIT – WASHER, Inflatable Restraint System

97	Y07	11514139	2	*1.08	BOLT, F/END INFL RST DISCRM SEN (M6X1X25) (08.900)
98	Y	11514139	2	*1.08	BOLT, F/END INFL RST DISCRM SEN (POS#2) (M6X1X25) (08.900)
98–99	Y F/SEAT INFL RST SYS (AK5)	11514139	2	*1.08	BOLT, F/END INFL RST DISCRM SEN (M6X1X25) (08.900)
97–02	Y F/SEAT INFL RST SYS (AK5)	11514623	3	*.96	BOLT, INFL RST DIAGN ENGY RESV MDL (M6X1X20) (08.900)
97–02	Y F/SEAT INFL RST SYS (AK5)	10406983	2	12.50	BOLT, STRG WHL INFL RST MDL
97–00	Y F/SEAT INFL RST SYS (AK5)	10437332	1	104.00	BRACKET, I/P INFL RST MDL (#50)
01–02	Y F/SEAT INFL RST SYS (AK5)	10437332	1	104.00	BRACKET, I/P INFL RST MDL (#50)
97–98	Y	26087359	1	78.00	COIL KIT, INFL RST STRG WHL MDL
99–01	Y	26069710	1	78.25	COIL, STRG WHL INFL RST MDL
02	Y	26095710	1	78.25	COIL, STRG WHL INFL RST MDL
97–98	Y	12167147	1	27.81	CONNECTOR, INFL RST F/END DISCM SEN (2–WAY F, W/LEADS) (16.712) (AC–DELCO #PT811)
99–01	YY67	15306044	1	21.52	CONNECTOR, INFL–INFL RST (2–WAY F) (W/LEADS) (AC–DELCO #PT1204)
01	YY67	12102101	1	51.51	CONNECTOR, INFL–INFL RST (2–WAY M) (W/4 LEADS..2 IN BOTH CAV A & B)
02	YY67	12102101	1	51.51	CONNECTOR, INFL–INFL RST (2–WAY M) (W/4 LEADS..2 IN BOTH CAV A & B)
02	YY67	15306044	1	21.52	CONNECTOR, INFL–INFL RST (2–WAY FEMALE M/P 150 (W/LEADS) .) (2–WAY F) (W/LEADS) (AC–DELCO #PT1204)
97–98	Y	12085486	1	53.04	CONNECTOR, INLINE–TO INFL RST HARN (BLACK) (10–WAY F) (W/LEADS) (02.535) (AC–DELCO #PT108)
01–02	YY67	12102101	1	51.51	CONNECTOR, INLINE–TO INFL RST HARN (2–WAY M) (W/4 LEADS..2 IN BOTH CAV A & B)
01–02	YY67	12126498	1	44.37	CONNECTOR INLINE–TO INFL RST HARN (2–WAY FEMALE M/P 280. CONSISTS OF 12077921 W/LEADS.) (2–WAY F) (W/LEADS) (AC–DELCO #PT767)
97–00	Y	12126040	1	60.44	CONNECTOR, INLINE–TO INFL RST I/P MDL (2–WAY M) (W/LEADS)
97–00	Y	12126498	1	44.37	CONNECTOR, INLINE–TO INFL RST I/P MDL (2–WAY F) (W/LEADS) (AC–DELCO #PT767)
97–98	Y	12126039	1	50.49	CONNECTOR, INLINE–TO INFL RST STRG WHL MDL COIL (2–WAY M) (W/2 LEADS, IF 4 LEADS REQ USE 12126494) (AC–DELCO #PT1217)
99–02	Y	12102101	1	51.51	CONNECTOR, INLINE–TO INFL RST STRG WHL MDL COIL (2–WAY M) (W/4 LEADS..2 IN BOTH CAV A & B)
97–98	Y	15305963	1	61.20	CONNECTOR, MDL–INFL RST DIAGN ENGY RESV (AC–DELCO #PT1099)
97–98	Y	12126040	1	60.44	CONNECTOR, MDL–INFL RST I/P (2–WAY M) (W/LEADS)

cardiagn.com

14.865 BOLT – BRACKET – COIL – COIL KIT – CONNECTOR – HARNESS – INDICATOR – MODULE – NUT – RETAINER – SENSOR – SWITCH – SWITCH KIT – WASHER, Inflatable Restraint System(Con't)

99–01	Y	15306044	1	21.52	CONNECTOR, MDL–INFL RST I/P (2–WAY F) (W/LEADS) (AC–DELCO #PT1204)
99–02	Y	15306322	1	78.54	CONNECTOR, MDL–INFL RST SEN & DIAGN (AC–DELCO #PT1376)
00	Y07 4–SPD A/TRANS (M30), A/C FRT AUTO/AUX CONT (CJ2), ACTIVE BRAKE CTL (JL4), (EXC TAIL & S/LP (T89) (EXPORT)	15306014	1	30.36	CONNECTOR, SW–INFL RST I/P MDL (6–WAY FEMALE M/P 150) (W/LEADS) (16.712) (AC–DELCO #PT1141)
01–02	YY	12085535	1	18.01	CONNECTOR, SW–INFL RST I/P MDL (2–WAY F W/LEADS W/INDEX TAB OTR EDGE OF CAVITY B) (02.535) (AC–DELCO #PT146)
01–02	YY67	15306014	1	30.36	CONNECTOR, SW–INFL RST I/P MDL (6–WAY FEMALE M/P 150 (W/LEADS) .) (6–WAY FEMALE M/P 150) (W/LEADS) (16.712) (AC–DELCO #PT1141)
02	YY67 4–SPD A/TRANS (M30), A/C FRT AUTO/AUX CONT (CJ2), T&T WHL (N37), (EXC TAIL & S/LP (T89) (EXPORT)	12085535	1	18.01	CONNECTOR, SW–INFL RST I/P MDL (2–WAY F W/LEADS W/INDEX TAB OTR EDGE OF CAVITY B) (02.535) (AC–DELCO #PT146)
97	Y F/SEAT INFL RST SYS (AK5)	10407332	1	638.00	MODULE, I/P INFL RST (MID MOUNT, MORTON 10" MDL)
98	Y F/SEAT INFL RST SYS (AK5)	10411125	1	638.00	MODULE, I/P INFL RST
99–02	Y F/SEAT INFL RST SYS (AK5)	10415724	1	638.00	MODULE, I/P INFL RST
97	Y F/SEAT INFL RST SYS (AK5)	09378281	1	399.00	MODULE, INFL RST SEN & DIAG
98	Y F/SEAT INFL RST SYS (AK5)	09378281	1	399.00	MODULE, INFL RST SEN & DIAG
99	Y F/SEAT INFL RST SYS (AK5)	09380620	1	399.00	MODULE, INFL RST SEN & DIAG
00	Y F/SEAT INFL RST SYS (AK5), (C88)	09391990	1	399.00	MODULE, INFL RST SEN & DIAG
00	Y07–67 F/SEAT INFL RST SYS (AK5), (EXC C88)	09391830	1	399.00	MODULE, INFL RST SEN & DIAG
01–02	Y F/SEAT INFL RST SYS (AK5), (C88)	12209740	1	399.00	MODULE, INFL RST SEN & DIAG
97	Y F/SEAT INFL RST SYS (AK5)	10407331	1	638.00	MODULE, STRG WHL INFL RST
98	Y F/SEAT INFL RST SYS (AK5)	10411124	1	638.00	MODULE, STRG WHL INFL RST
99–02	Y F/SEAT INFL RST SYS (AK5)	10415723	1	638.00	MODULE, STRG WHL INFL RST
00–02	Y (C88)	10440761	1	30.50	SWITCH, I/P INFL RST MDL
97–02	Y	26011609	1	8.10	WASHER, STRG WHL INFL RST MDL COIL

*EXPORT**********EXPORT**********EXPORT**********EXPORT**********EXPORT*

00–02	Y07–67 F/SEAT INFL RST SYS (AK5), (EXC C88)	12209730	1	399.00	MODULE, INFL RST SEN & DIAG

14.875 BELT – BELT KIT – BOLT – BRACKET – COVER – EXTENSION KIT – NUT – PLATE, Seat Belt

98–02	Y67	10402798	1	18.50	BRACKET, D/SEAT SHLDR BELT GDE
98–02	Y67	10402807	1	18.50	BRACKET, P/SEAT SHLDR BELT GDE
97–98	Y	15734139	2	5.30	PLATE, D/SEAT BELT ANC (BKL SI) (OVAL) (16.714)
99–02	Y	15734139	1	5.30	PLATE, D/SEAT BELT ANC (BKL SI) (OVAL) (16.714)
97–02	Y F/SEAT INFL RST SYS (AK5)	10403689	1	3.35	PLATE, D/SEAT BELT RETR ANC
97–02	Y F/SEAT INFL RST SYS (AK5)	10403689	1	3.35	PLATE, P/SEAT BELT RETR ANC

cardiagn.com

14.875 BELT – BELT KIT – BOLT – BRACKET – COVER – EXTENSION KIT – NUT – PLATE, Seat Belt(Con't)

97–98	Y	15734139	2	5.30	PLATE, P/SEAT BELT RETR ANC (OVAL) (16.714)
99–02	Y	15734139	1	5.30	PLATE, P/SEAT BELT RETR ANC (OVAL) (16.714)

15.100 CARPET – MOLDING – PANEL – RETAINER, Rear Quarter

97–02	Y	10274637	LH	14.60	MOLDING, BODY SI FRT GARN (BLACK)
97–02	Y	10274638	RH	14.60	MOLDING, BODY SI FRT GARN (BLACK)
99–02	Y37	10258567	LH	80.25	PANEL, BODY SI TR ((BLACK))
99–02	Y37	10258568	RH	80.25	PANEL, BODY SI TR (BLACK)
97–02	Y	15748479	2	*.62	RETAINER, BODY SI FRT G/MLDG (13.0MM WIDE) (YELLOW) (U–BASE) (16.575)
99–02	Y37	00332364	2	*.52	RETAINER, BODY SI T/PNL (08.154)
99–02	Y37	10417444	2	3.33	RETAINER, BODY SI T/PNL
99–02	Y37	15748479	8	*.62	RETAINER, BODY SI T/PNL (13.0MM WIDE) (YELLOW) (U–BASE) (16.575)

15.222 BOLT – CARPET – COVER – INSULATOR – LATCH – NET – NUT – PANEL – PLATE – RETAINER – SEAL – STRIKER – TRIM, Rear Compartment Trim

97–02	Y07	10407543	RH	38.00	PANEL, R/CMPT SI TR
97–02	Y07	10407544	LH	38.00	PANEL, R/CMPT SI TR
97–02	Y07	10404603	2	1.70	PLATE, CONVENIENCE NET LWR STUD (04.785)
98–02	YY37–67	10404603	4	1.70	PLATE, CONVENIENCE NET STUD (04.785)
99–02	Y37	10404603	4	1.70	PLATE, CONVENIENCE NET STUD (04.785)
97–02	Y07	10404603	2	1.70	PLATE, CONVENIENCE NET UPR STUD (POSN #2) (04.785)
98–02	Y67	16674629	6	*3.45	RETAINER, R/CMPT FRT TR (FASTNER–PUSH–IN FITS HOLE 6.35, OD–25.4, LEN–18, SGL HEAD)
97–02	Y07	00332364	RH	*.52	RETAINER, R/CMPT SI T/PNL (PUSH IN) (POSN #6) (08.154)
97–02	Y07	10285935	2	*.53	RETAINER, R/CMPT SI T/PNL (PUSH IN) (WHITE) (4MM HOLE, 25.5MM LG) (MALE PUSH–IN) (14.630)
97–02	Y07	20540336	RH	3.45	RETAINER, R/CMPT SI T/PNL (PUSH IN) (POSN #4) (PAINT TO MATCH) (FITS .18 HOLE, .7 LG, .43 OD, NYLON) (14.630)
97–02	Y07	15748479	6	*.62	RETAINER, R/CMPT SI T/PNL RET (13.0MM WIDE) (YELLOW) (U–BASE) (16.575)
97	Y07	1041[illegible]32	6	3.45	RETAINER, R/END TR FIN PNL
98–02	Y07	10[illegible]32		3.45	RETAINER, R/END TR FIN PNL
98–00	Y67	[illegible]	[illegible]	[illegible]	RETAINER, R/END TR FIN PNL
0[illegible]–02	[illegible]	[illegible]20			RETAINER, R/END TR FIN PNL
[illegible]	YY37–67	10415038	4	3.45	SEAL, CONVENIENCE NET ANC PLT
98–02	YY07	11515[illegible]74	2	*1.75	SEAL, CONVENIENCE NET LWR STUD PLT (4 1/4"X7 1/2") (TRIM AS REQ'D) (15.492)
98–02	Y07	10415038	2	3.45	SEAL, CONVENIENCE NET UPR STUD PLT

cardiagn.com

15.222 BOLT – CARPET – COVER – INSULATOR – LATCH – NET – NUT – PANEL – PLATE – RETAINER – SEAL – STRIKER – TRIM, Rear Compartment Trim(Con't)

97–00	Y	10290688	2	3.45	STRIKER, R/CMPT PNL STOW PKT CVR LAT (POSN #2)
97–98	Y	10401266	2	3.45	STRIKER, R/CMPT PNL STOW PKT CVR LAT (POSN #1)
99–02	Y07–67	10401266	2	3.45	STRIKER, R/CMPT PNL STOW PKT CVR LAT (POSN #1)
99	Y37	10402712	1	208.00	TRIM, R/CMPT FLR PNL
00	Y37	10444221	1	208.00	TRIM, R/CMPT FLR PNL
01–02	Y37	10422924	1	208.00	TRIM, R/CMPT FLR PNL
01–02	Y67 (19I), (EXC CHASSIS, REALTIME DAMPING (F45)	10438995	1	208.00	TRIM, R/CMPT FLR PNL (BLACK)
01–02	Y67 (92I), (EXC CHASSIS, REALTIME DAMPING (F45)	10438996	1	208.00	TRIM, R/CMPT FLR PNL (PEWTER)
01–02	Y67 (67I), (EXC CHASSIS, REALTIME DAMPING (F45)	10438997	1	208.00	TRIM, R/CMPT FLR PNL (OAK)
01–02	Y67 (70I), (EXC CHASSIS, REALTIME DAMPING (F45)	10438998	1	208.00	TRIM, R/CMPT FLR PNL (RED)
01–02	Y67 CHASSIS, REALTIME DAMPING (F45), (19I)	10439000	1	208.00	TRIM, R/CMPT FLR PNL (BLACK)
01–02	Y67 CHASSIS, REALTIME DAMPING (F45), (92I)	10439001	1	208.00	TRIM, R/CMPT FLR PNL (PEWTER)
01–02	Y67 CHASSIS, REALTIME DAMPING (F45), (67I)	10439002	1	208.00	TRIM, R/CMPT FLR PNL (OAK)
01–02	Y67 CHASSIS, REALTIME DAMPING (F45), (70I)	10439003	1	208.00	TRIM, R/CMPT FLR PNL (RED)
97	Y (EXC CHASSIS, REALTIME DAMPING (F45), MULTIPLE CD PLYR (U1S)	10292411	1	208.00	TRIM, R/CMPT FLR PNL STOW PKT (GRAY)
97	Y MULTIPLE CD PLYR (U1S), (EXC CHASSIS, REALTIME DAMPING (F45)	10292412	1	208.00	TRIM, R/CMPT FLR PNL STOW PKT (GRAY)
97	Y07 CHASSIS, REALTIME DAMPING (F45), (EXC MULTIPLE CD PLYR (U1S)	10292413	1	208.00	TRIM, R/CMPT FLR PNL STOW PKT (GRAY)
97	Y07 CHASSIS, REALTIME DAMPING (F45), MULTIPLE CD PLYR (U1S)	10292414	1	208.00	TRIM, R/CMPT FLR PNL STOW PKT (GRAY)
98–00	Y07–67 (EXC CHASSIS, REALTIME DAMPING (F45), MULTIPLE CD PLYR (U1S)	10292411	1	208.00	TRIM, R/CMPT FLR PNL STOW PKT (GRAY)
98–00	Y07–67 MULTIPLE CD PLYR (U1S), (EXC CHASSIS, REALTIME DAMPING (F45)	10292412	1	208.00	TRIM, R/CMPT FLR PNL STOW PKT (GRAY)
98–00	Y07–67 CHASSIS, REALTIME DAMPING (F45), (EXC MULTIPLE CD PLYR (U1S)	10292413	1	208.00	TRIM, R/CMPT FLR PNL STOW PKT (GRAY)
98–00	Y07–67 CHASSIS, REALTIME DAMPING (F45), MULTIPLE CD PLYR (U1S)	10292414	1	208.00	TRIM, R/CMPT FLR PNL STOW PKT (GRAY)
01–02	Y07 (EXC CHASSIS, REALTIME DAMPING (F45), MULTIPLE CD PLYR (U1S)	10292411	1	208.00	TRIM, R/CMPT FLR PNL STOW PKT (GRAY)
01–02	Y07 MULTIPLE CD PLYR (U1S), (EXC CHASSIS, REALTIME DAMPING (F45)	10292412	1	208.00	TRIM, R/CMPT FLR PNL STOW PKT (GRAY)
01–02	Y07 CHASSIS, REALTIME DAMPING (F45), (EXC MULTIPLE CD PLYR (U1S)	10292413	1	208.00	TRIM, R/CMPT FLR PNL STOW PKT (GRAY)
01–02	Y07 CHASSIS, REALTIME DAMPING (F45), MULTIPLE CD PLYR (U1S)	10292414	1	208.00	TRIM, R/CMPT FLR PNL STOW PKT (GRAY)

cardiagn.com

2.480 HARNESS – WIRE, Chassis Wiring(Con't)

98	Y07 6–SPD M/TRANS (MM6), A/C MAN CONT (C60), FRT ABS BRAKE LOC (JAG), CANADIAN (Z49), (EXC ACTIVE BRAKE CTL (JL4), TAIL & S/LP (T89) (EXPORT), SPECIAL TAIL & S/LP (T93)	12190421	1	1233.23	HARNESS, I/P WRG (MUST BE USED W/BODY CONT MDL LABELED 9359821 FOR 1998) .....
98	Y67 4–SPD A/TRANS (M30), A/C FRT AUTO/AUX CONT (CJ2), (EXC FRT ABS BRAKE LOC (JAG), TAIL & S/LP (T89) (EXPORT), CANADIAN (Z49)	12189801	1	1257.59	HARNESS, I/P WRG .....
98	Y67 6–SPD M/TRANS (MM6), A/C FRT AUTO/AUX CONT (CJ2), (EXC FRT ABS BRAKE LOC (JAG), TAIL & S/LP (T89) (EXPORT), CANADIAN (Z49)	12189802	1	1257.59	HARNESS, I/P WRG .....
98	Y67 4–SPD A/TRANS (M30), A/C MAN CONT (C60), (EXC FRT ABS BRAKE LOC (JAG), TAIL & S/LP (T89) (EXPORT), CANADIAN (Z49)	12189803	1	1257.59	HARNESS, I/P WRG .....
98	Y67 6–SPD M/TRANS (MM6), A/C MAN CONT (C60), (EXC FRT ABS BRAKE LOC (JAG), TAIL & S/LP (T89) (EXPORT), CANADIAN (Z49)	12189804	1	1257.59	HARNESS, I/P WRG .....
98	Y67 4–SPD A/TRANS (M30), A/C FRT AUTO/AUX CONT (CJ2), CANADIAN (Z49), (EXC FRT ABS BRAKE LOC (JAG), TAIL & S/LP (T89) (EXPORT), SPECIAL TAIL & S/LP (T93)	12189805	1	1257.59	HARNESS, I/P WRG .....
98	Y67 4–SPD A/TRANS (M30), A/C MAN CONT (C60), CANADIAN (Z49), (EXC FRT ABS BRAKE LOC (JAG), TAIL & S/LP (T89) (EXPORT), SPECIAL TAIL & S/LP (T93)	12189806	1	1257.59	HARNESS, I/P WRG .....
98	Y67 6–SPD M/TRANS (MM6), A/C FRT AUTO/AUX CONT (CJ2), CANADIAN (Z49), (EXC FRT ABS BRAKE LOC (JAG), TAIL & S/LP (T89) (EXPORT), SPECIAL TAIL & S/LP (T93)	12189807	1	1257.59	HARNESS, I/P WRG .....
98	Y67 6–SPD M/TRANS (MM6), A/C MAN CONT (C60), CANADIAN (Z49), (EXC FRT ABS BRAKE LOC (JAG), TAIL & S/LP (T89) (EXPORT), SPECIAL TAIL & S/LP (T93)	12189808	1	1257.59	HARNESS, I/P WRG .....
98	Y67 4–SPD A/TRANS (M30), A/C FRT AUTO/AUX CONT (CJ2), FRT ABS BRAKE LOC (JAG), (EXC TAIL & S/LP (T89) (EXPORT), CANADIAN (Z49)	12189980	1	1233.23	HARNESS, I/P WRG (MUST BE USED W/BODY CONT MDL LABELED 9359821 FOR 1998) .....
98	Y67 6–SPD M/TRANS (MM6), A/C FRT AUTO/AUX CONT (CJ2), FRT ABS BRAKE LOC (JAG), (EXC TAIL & S/LP (T89) (EXPORT), CANADIAN (Z49)	12189981	1	1233.23	HARNESS, I/P WRG (MUST BE USED W/BODY CONT MDL LABELED 9359821 FOR 1998) .....

cardiagn.com

ILLUSTRATION INDEX

	TITLE	GRID
1997	Y07 WINDSHIELD TRIM & HARDWARE	5-D4
1998-2002	Y07-67 WINDSHIELD TRIM & HARDWARE	5-D4
1999-2002	Y37 WINDSHIELD TRIM & HARDWARE	5-D7
1997-1998	Y07 BODY GLASS & WEATHERSTRIPS	5-D10
1998-2002	Y67 BODY GLASS & WEATHERSTRIPS	5-D14
1999-2000	Y07 BODY GLASS & WEATHERSTRIPS	5-D18
1999-2002	Y37 BODY GLASS & WEATHERSTRIPS	5-D22
2001-2002	Y07 BODY GLASS & WEATHERSTRIPS	5-D25
1997-2002	Y WIPER SYSTEM/WINDSHIELD	5-E2
1997-2002	Y MIRRORS/REAR VIEW & CONTROLS (EXTERIOR)	5-E5
1997	Y07 SUNSHADE ASM	5-E8
1998-2002	Y07-67 SUNSHADE ASM	5-E8
1999-2002	Y37 SUNSHADE ASM	5-E20
1997	Y INSTRUMENT PANEL PART 2 (COMPARTMENT/INSULATORS/TRIM PLATES)	5-E25
1997	Y INSTRUMENT PANEL PART 3 (ELECTRICAL)	5-F2
1997-1998	Y INSTRUMENT PANEL PART 1 (TRIM PAD/PANELS/CLUSTER)	5-F6
1998	Y INSTRUMENT PANEL PART 3 (ELECTRICAL)	5-F10
1998-1999	Y INSTRUMENT PANEL PART 2 (COMPARTMENT/INSULATORS/TRIM PLATES)	5-F14
1998-2002	Y INSTRUMENT PANEL PART 2 (COMPARTMENT/INSULATORS/TRIM PLATES)	5-F18
1999-2002	Y07-67 INSTRUMENT PANEL PART 1 (TRIM PAD/PANELS/CLUSTER)	5-G2
1999-2002	Y37 INSTRUMENT PANEL PART 1 (TRIM PAD/PANELS/CLUSTER)	5-G12
1999-2002	Y INSTRUMENT PANEL PART 3 (ELECTRICAL)	5-G16
2000-2002	Y INSTRUMENT PANEL PART 2 (COMPARTMENT/INSULATORS/TRIM PLATES)	5-G23
1997-2002	Y CONSOLE/SEAT SEPARATOR	5-H2
1997	Y DOOR HARDWARE/FRONT	5-H7
1998-2002	Y DOOR HARDWARE/FRONT	5-H12
1997-1998	Y ENTRY SYSTEM/KEYLESS REMOTE	5-H20
1999-2000	Y ENTRY SYSTEM/KEYLESS REMOTE	5-H22
2001-2002	Y ENTRY SYSTEM/KEYLESS REMOTE	5-H24

cardiagn.com

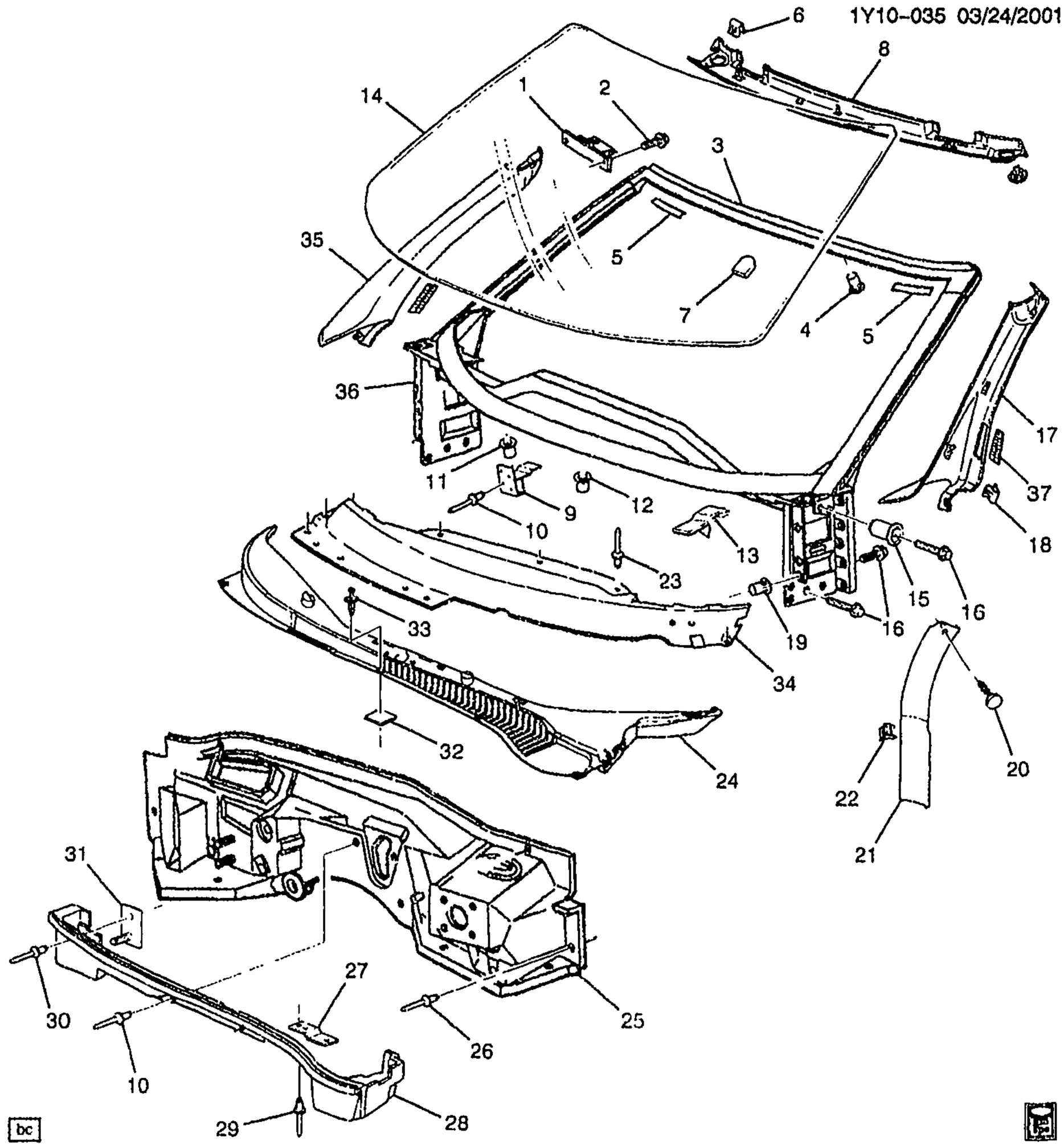

1Y10-035

1997 Y07 WINDSHIELD TRIM & HARDWARE
1998-2002 Y07-67 WINDSHIELD TRIM & HARDWARE

1.	5-N22	12.811	STRIKER, RF LIFT OFF PNL/WDO FRT	97-02	Y07	LH	10263229
	5-N22	12.811	STRIKER, RF LIFT OFF PNL/WDO FRT	97-02	Y07	RH	10263230

© 2001 GENERAL MOTORS SERVICE PARTS OPERATIONS-CHEVROLET-15Y

cardiagn.com

							1Y10-035
2.		8.900	BOLT, HEX M6X1.25X25, 9.8, 6138M DOG PT W/CON WA 170D (RF LIFT OFF PNL/WDO FRT STKR)	97-02	Y07	4	11516932
		8.900	BOLT, HEX M6X1.25X25, 9.8, 6138M DOG PT W/CON WA 170D (F/TOP FRT LAT STKR)	97-02	Y67	4	11516932
3.	5-N21	12.807	FRAME, W/S (INCLS 4, 11, 12, 19, 36)	97-02	Y	1	10420764
4.	5-N26	13.346	NUT, R/TOP BOLT GDE (PART OF 3) (M6X1.0) (10.512)	97	Y	6	10237960
	5-N26	13.346	NUT, R/TOP BOLT GDE (PART OF 3) (M6X1.0 ITR "D" THD) (10.512)	98-02	Y	6	10410398
5.	5-A8	10.027	SPACER, W/S	97-02	Y	2	10407149
6.	5-A8	10.056	CLIP, W/S UPR G/MLDG (PART OF 8) (13.0MM WIDE) (YELLOW) (U-BASE) (16.575)	97-98	Y	2	15748479
	5-A8	10.056	CLIP, W/S UPR G/MLDG (PART OF 8) (13.0MM WIDE) (YELLOW) (U-BASE) (16.575)	99-02	Y07-67	2	15748479
7.	5-A12	10.187	BRACKET, I/S RR VIEW MIR (PART OF 14)	97-98	Y	1	25653132
	5-A12	10.187	BRACKET, I/S RR VIEW MIR (PART OF 14)	99-00	Y (UV6)	1	20626174
	5-A12	10.187	BRACKET, I/S RR VIEW MIR (PART OF 14)	99-00	Y (EXC UV6)	1	25653132
	5-A12	10.187	BRACKET, I/S RR VIEW MIR (PART OF 14)	01-02	Y07-67 (UV6)	1	20626174
	5-A12	10.187	BRACKET, I/S RR VIEW MIR (PART OF 14)	01-02	Y07-67 (EXC UV6)	1	25653132
	5-A12	10.187	BRACKET, I/S RR VIEW MIR (PART OF 14)	02	YY67 (UV6)	1	25653132
8.	5-A8	10.051	MOLDING, W/S UPR GARN (INCLS 6)	97-98	Y	1	10431271
	5-A8	10.051	MOLDING, W/S UPR GARN (INCLS 6)	99-02	Y07-67	1	10431271
9.		N.S.	SUPPORT, WSW SYS MDL				
10.		N.S.	RIVET, PLNM PNL				
11.	5-A9	10.152	NUT, WSW SYS MDL (PART OF 3) (M6X1.0) (10.512)	97	Y	1	10237960
	5-A9	10.152	NUT, WSW SYS MDL (PART OF 3) (M6X1.0 ITR "D" THD) (10.512)	98-02	Y	1	10410398
12.	5-N21	12.659	NUT, BODY H/PLR TIE BAR (PART OF 3) (M6X1.0) (10.512)	97	Y	13	10237960
	5-N21	12.659	NUT, BODY H/PLR TIE BAR (PART OF 3) (M6X1.0 ITR "D" THD) (10.512)	98-02	Y	13	10410398
13.		N.S.	SUPPORT, W/S				
14.	5-A8	10.027	WINDSHIELD, (INCLS 7)	97-98	Y07	1	10295096
	5-A8	10.027	WINDSHIELD, (INCLS 7)	98	Y67	1	10295097
	5-A8	10.027	WINDSHIELD, (INCLS 7)	99-02	Y07 (EXC UV6)	1	10295096
	5-A8	10.027	WINDSHIELD, (INCLS 7)	99-02	Y07 (UV6)	1	10426713
	5-A8	10.027	WINDSHIELD, (INCLS 7)	99-00	Y37-67 (EXC UV6)	1	10295097
	5-A8	10.027	WINDSHIELD, (INCLS 7)	99-00	Y37-67 (UV6)	1	10426714
	5-A8	10.027	WINDSHIELD, (INCLS 7)	01-02	Y67 (EXC UV6)	1	10295097
	5-A8	10.027	WINDSHIELD, (INCLS 7)	01-02	Y67 (UV6)	1	10426714
15.	5-N22	12.840	NUT, BODY H/PLR INR PNL (3.015)	97-02	Y	AR	10281493

cardiagn.com

							1Y10-035
16.		8.900	BOLT, HEX HD W/CONICAL WA, M8X1, 25X30, 17 THD, 32 OD, 9.8 MAT, 7114M FIN MACH, 8MM P-POINT (BODY H/PLR INR PNL)	97-02		16	11516611
17.	5-A8	10.051	MOLDING, W/S SI GARN (INCLS 18, 37)	97-02	Y	LH	10247723
18.	5-A8	10.056	CLIP, W/S SI G/MLDG (PART OF 17, 35)	97-02	Y	6	10289034
19.	5-N22	12.840	NUT, BODY H/PLR INR UPR PNL (PART OF 3) (INSERT M8X1.25) (STEEL) (6.760)	97-02	Y	13	27000835
20.	5-A8	10.056	RETAINER, W/S SI G/MLDG (PAINT TO MATCH) (FITS .18 HOLE, .7 LG, .43 OD, NYLON) (14.630)	97-02	Y	2	20540336
21.	5-N28	15.100	MOLDING, BODY SI FRT GARN (INCLS 22) (BLACK)	97-02	Y	LH	10274637
	5-N28	15.100	MOLDING, BODY SI FRT GARN (INCLS 22) (BLACK)	97-02	Y	RH	10274638
22.	5-N28	15.100	RETAINER, BODY SI FRT G/MLDG (PART OF 21) (13.0MM WIDE) (YELLOW) (U-BASE) (16.575)	97-02	Y	2	15748479
23.		N.S.	RIVET, PLNM PNL				
24.	5-N21	12.800	SCREEN, AIR INL (#86) (W/SEAL & FRM)	97	Y	1	10247327
	5-N21	12.800	SCREEN, AIR INL (#86)	97-02	Y	1	10446063
25.	5-N21	12.804	PANEL, DA	97-02	Y	1	10424966
26.		N.S.	RIVET, DA PNL			4	
27.	5-A9	10.152	BRACKET, WSW MOT (W/NUT)	97-02	Y	1	10264094
28.	5-N21	12.804	PANEL, PLNM LWR	97-02	Y	1	10247310
29.		N.S.	RIVET, WSW MOT BRKT				
30.		N.S.	RIVET, FRT W/H PNL STUD PLT				
31.	5-N9	8.155	PLATE, FRT W/H PNL BRKT STUD (W/STUD) (4.785)	97-02	Y	2	10404603
32.	5-N21	12.804	SEAL, PLNM PNL (4 1/4"X7 1/2") (TRIM AS REQ'D) (15.492)	97-02	Y	1	11515174
33.	5-N21	12.800	RETAINER, AIR INL SCRN (10.154)	97-02	Y	4	21075686
34.	5-N21	12.804	PANEL, PLNM UPR	97-98	Y	1	10247311
	5-N21	12.804	PANEL, PLNM UPR	99-01	Y (EXC UV6)	1	10247311
	5-N21	12.804	PANEL, PLNM UPR	02	Y07-67 (EXC UV6)	1	10247311
	5-N21	12.804	PANEL, PLNM UPR	99-01	Y (UV6)	1	10410117
35.	5-A8	10.051	MOLDING, W/S SI GARN (INCLS 18)	97-02	Y	RH	10247724
36.		N.S.	PANEL, BODY H/PLR INR UPR (PART OF 3)				
37.		N.S.	OUTLET, SI WDO DEFG (PART OF 17)				

RPO DEFINITIONS
UV6 -- DISPLAY,HEADUP

cardiagn.com

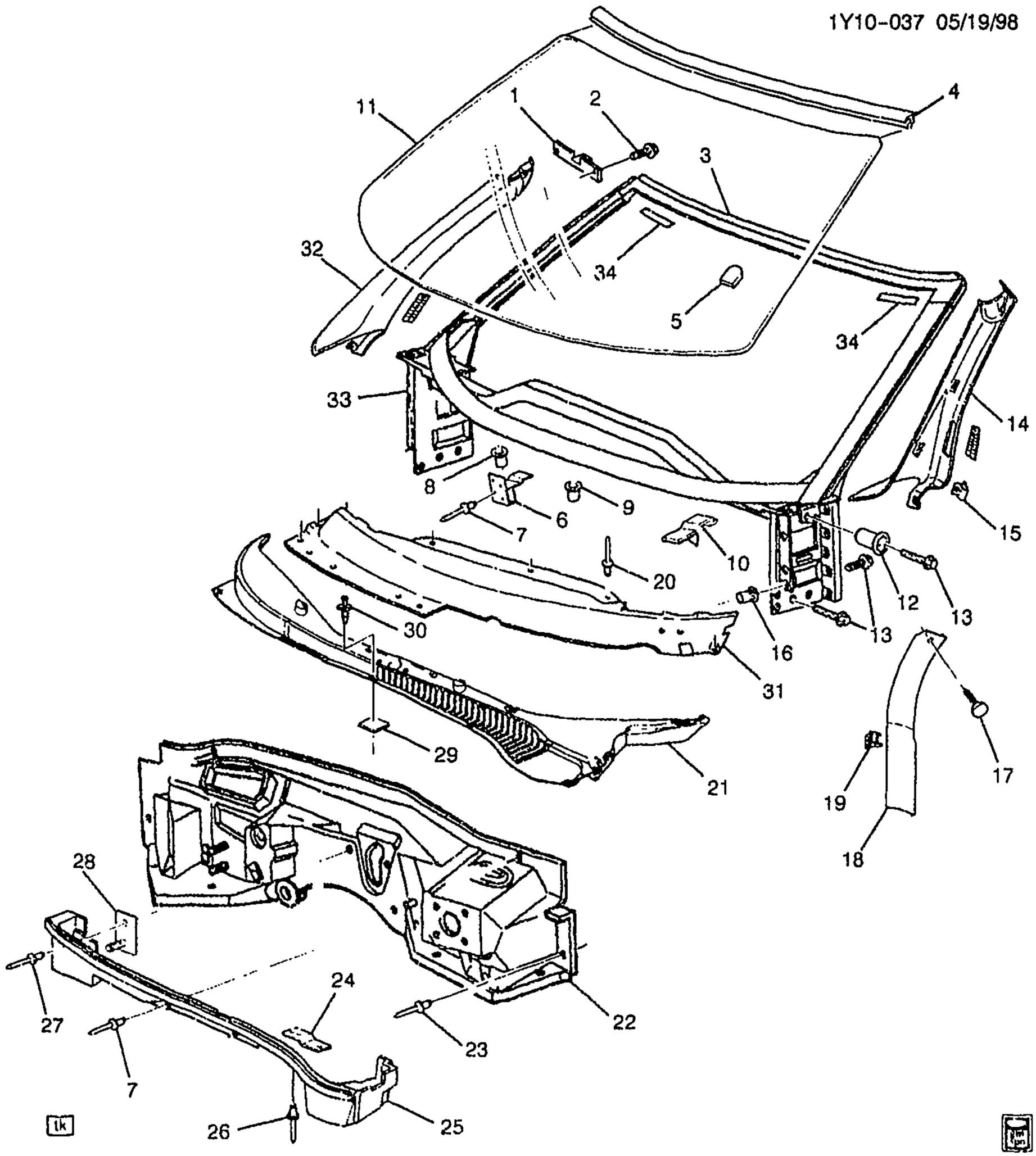

1Y10-037

1999-2002 Y37 WINDSHIELD TRIM & HARDWARE

1.	5-N21	12.810	BRACKET, RF PNL FRT (UPR FRT)	99-02	Y37	LH	10290699
	5-N21	12.810	BRACKET, RF PNL FRT (UPR FRT)	99-02	Y37	RH	10290700

cardiagn.com

							1Y10-037
2.		8.900	BOLT, HEX W/WA (M6X1X20) (RF PNL FRT BRKT)	99-02	Y37	2	10077321
3.	5-N21	12.807	FRAME, W/S (INCLS 8, 9, 16, 33)	99-02	Y	1	10420764
4.	5-A8	10.093	MOLDING, W/S UPR RVL	99-02	Y37	1	10427732
5.	5-A12	10.187	BRACKET, I/S RR VIEW MIR (PART OF 11)	99-00	Y (UV6)	1	20626174
	5-A12	10.187	BRACKET, I/S RR VIEW MIR (PART OF 11)	99-00	Y (EXC UV6)	1	25653132
	5-A12	10.187	BRACKET, I/S RR VIEW MIR (PART OF 11)	01-02	Y37	1	25653132
6.		N.S.	SUPPORT, WSW SYS MDL				
7.		N.S.	RIVET, PLNM PNL				
8.	5-A9	10.152	NUT, WSW SYS MDL (PART OF 3) (M6X1.0 ITR "D" THD) (10.512)	99-02	Y	1	10410398
9.	5-N21	12.659	NUT, BODY H/PLR TIE BAR (PART OF 3) (M6X1.0 ITR "D" THD) (10.512)	99-02	Y	13	10410398
10.		N.S.	SUPPORT, W/S				
11.	5-A8	10.027	WINDSHIELD, (INCLS 5)	99-00	Y37-67 (EXC UV6)	1	10295097
	5-A8	10.027	WINDSHIELD, (INCLS 5)	99-00	Y37-67 (UV6)	1	10426714
	5-A8	10.027	WINDSHIELD, (INCLS 5)	01-02	Y37	1	10426201
12.	5-N22	12.840	NUT, BODY H/PLR INR PNL (3.015)	99-02	Y	AR	10281493
13.		8.900	BOLT, HEX HD W/CONICAL WA, M8X1, 25X30, 17 THD, 32 OD, 9.8 MAT, 7114M FIN MACH, 8MM P-POINT (BODY H/PLR INR PNL)	99-02		16	11516611
14.	5-A8	10.051	MOLDING, W/S SI GARN (INCLS 15)	99-02	Y	LH	10247723
15.	5-A8	10.056	CLIP, W/S SI G/MLDG (PART OF 14, 32)	99-02	Y	6	10289034
16.	5-N22	12.840	NUT, BODY H/PLR INR UPR PNL (PART OF 3) (INSERT M8X1.25) (STEEL) (6.760)	99-02	Y	13	27000835
17.	5-A8	10.056	RETAINER, W/S SI G/MLDG (PAINT TO MATCH) (FITS .18 HOLE, .7 LG, .43 OD, NYLON) (14.630)	99-02	Y	2	20540336
18.	5-N28	15.100	MOLDING, BODY SI FRT GARN (INCLS 19) (BLACK)	99-02	Y	LH	10274637
	5-N28	15.100	MOLDING, BODY SI FRT GARN (INCLS 19) (BLACK)	99-02	Y	RH	10274638
19.	5-N28	15.100	RETAINER, BODY SI FRT G/MLDG (PART OF 18) (13.0MM WIDE) (YELLOW) (U-BASE) (16.575)	99-02	Y	2	15748479
20.		N.S.	RIVET, PLNM PNL				
21.	5-N21	12.800	SCREEN, AIR INL (#86)	99-02	Y	1	10446063
22.	5-N21	12.804	PANEL, DA	99-02	Y	1	10424966
23.		N.S.	RIVET, DA PNL			4	
24.	5-A9	10.152	BRACKET, WSW MOT (W/NUT)	99-02	Y	1	10264094
25.	5-N21	12.804	PANEL, PLNM LWR	99-02	Y	1	10247310
26.		N.S.	RIVET, WSW MOT BRKT				
27.		N.S.	RIVET, FRT W/H PNL STUD PLT				
28.	5-N9	8.155	PLATE, FRT W/H PNL BRKT STUD (W/STUD) (4.785)	99-02	Y	2	10404603

cardiagn.com

							1Y10–037
29.	5–N21	12.804	SEAL, PLNM PNL (4 1/4"X7 1/2") (TRIM AS REQ'D) (15.492)	99–02	Y	1	11515174
30.	5–N21	12.800	RETAINER, AIR INL SCRN (10.154)	99–02	Y	4	21075686
31.	5–N21	12.804	PANEL, PLNM UPR	99–01	Y (EXC UV6)	1	10247311
	5–N21	12.804	PANEL, PLNM UPR	02	YY37	1	10410117
32.	5–A8	10.051	MOLDING, W/S SI GARN (INCLS 15)	99–02	Y	RH	10247724
33.		N.S.	PANEL, BODY H/PLR INR UPR (PART OF 3)		.....		
34.	5–A8	10.027	SPACER, W/S	99–02	Y	2	10407149

RPO DEFINITIONS
UV6 – DISPLAY,HEADUP

cardiagn.com

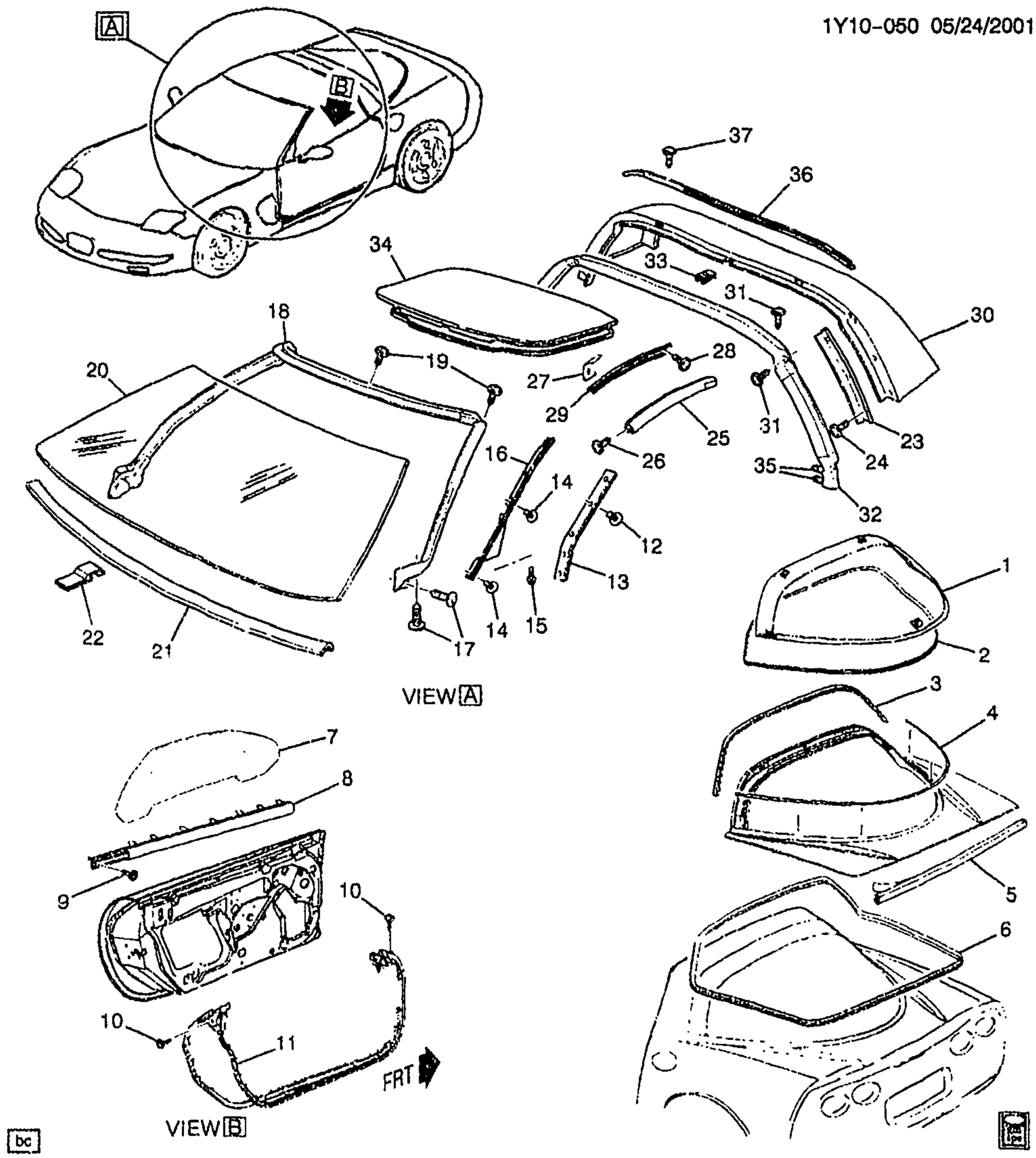

1Y10-050

1997-1998 Y07 BODY GLASS & WEATHERSTRIPS

1.	5-N19	12.180	WINDOW, R/CMPT LIFT (HTCH GLS)	97-98	Y07	1	10247317
		8.800	ADHESIVE KIT, GLASS (URETHANE) (R/CMPT L/WDO) ..	97-98	.....	1	12346392

2001 GENERAL MOTORS SERVICE PARTS OPERATIONS - CHEVROLET - 15Y

cardiagn.com

							1Y10-050
2.	5-N20	12.269	SEAL, R/CMPT L/WDO RR AUX (POSN #1)	97-98	Y07	1	10401665
3.	5-N20	12.269	SEAL, R/CMPT L/WDO RR AUX (FRT SECONDARY SEAL) (POSN #2) (NO TAIL AT END OF SEAL)	97-98	Y07	1	10407727
4.	5-N20	12.269	SEAL, R/CMPT L/WDO FRT AUX	97-98	Y07	1	10401667
5.	5-N20	12.269	WEATHERSTRIP, R/CMPT L/WDO	97-98	Y07	1	10280750
6.	5-N20	12.269	WEATHERSTRIP, R/CMPT L/WDO	97-98	Y07	1	10236980
7.	5-A27	10.681	WINDOW, FRT S/D	97-98	Y	LH	10403189
	5-A27	10.681	WINDOW, FRT S/D	97-98	Y	RH	10403190
8.	5-B2	10.710	SEALING STRIP, FRT S/D WDO OTR	97	Y07	RH	10252880
	5-B2	10.710	SEALING STRIP, FRT S/D WDO OTR	98	Y07	LH	10447039
	5-B2	10.710	SEALING STRIP, FRT S/D WDO OTR	98	Y07	RH	10447040
9.		8.908	SCR LGE WASHER HEAD HI-LO BHL (FRT S/D WDO OTR S/STR) (8.977)	97-98		2	11509231
10.	5-A28	10.694	RETAINER, FRT S/D W/STR (PAINT TO MATCH) (FITS .18 HOLE, .7 LG, .43 OD, NYLON) (14.630)	97-98	Y	8	20540336
11.	5-A28	10.694	WEATHERSTRIP, FRT S/D (EPDM COMBINATION)	97-98	Y	LH	10302723
	5-A28	10.694	WEATHERSTRIP, FRT S/D (EPDM COMBINATION)	97-98	Y	RH	10302724
12.		8.977	BOLT, RD CROWNED WA HD C/R M4.2X1.41X16POR (FRT S/D WDO FRT W/STR RET)	97-98		10	11508231
13.	5-B2	10.710	RETAINER, FRT S/D WDO FRT W/STR	97-98	Y07	LH	10252847
	5-B2	10.710	RETAINER, FRT S/D WDO FRT W/STR	97-98	Y07	RH	10252848
14.		8.977	SCREW, LG RND WA HD W/BLK NYL WA, 4.2X 1.41X13, 11-OD, DRILL PT, 6172, PEOR (W/S SI R/MLDG)	97-98		6	10180421
15.		8.977	SCREW, LG RND WA HD W/BLK NYL WA, 4.2X 1.41X13, 11-OD, DRILL PT, 6172, PEOR (O/S RR VIEW MIR APLQ)	97-98		2	10180421
16.	5-A8	10.093	MOLDING, W/S SI RVL (BLACK)	97	Y07	LH	10299306
	5-A8	10.093	MOLDING, W/S SI RVL (BLACK)	97	Y07	RH	10299307
	5-A8	10.093	MOLDING, W/S SI RVL (BLACK)	98	Y07-67	LH	10299306
	5-A8	10.093	MOLDING, W/S SI RVL (BLACK)	98	Y07-67	RH	10299307
17.	5-N21	12.807	RETAINER, W/S FRM W/STR (PAINT TO MATCH) (FITS .18 HOLE, .7 LG, .43 OD, NYLON) (14.630)	97-98	Y	4	20540336
18.	5-N21	12.807	WEATHERSTRIP, W/S FRM	97-98	Y07	1	10432623
19.		8.977	SCREW, LG RND WA HD W/BLK NYL WA, 4.2X 1.41X13, 11-OD, DRILL PT, 6172, PEOR (W/S FRM W/STR)	97-98		7	10180421
20.	5-A8	10.027	WINDSHIELD,	97-98	Y07	1	10295096

cardiagn.com

							1Y10-050
21.	5-A8	10.092	SEAL, W/S (POSN #2) (1420 MM LG)	97-98	Y	1	10299765
22.		N.S.	SUPPORT, W/S				
23.	5-B2	10.710	RETAINER, FRT S/D WDO RR W/STR	97-98	Y07	LH	10299393
	5-B2	10.710	RETAINER, FRT S/D WDO RR W/STR	97-98	Y07	RH	10299394
24.		8.977	BOLT, RD CROWNED WA HD C/R M4.2X1.41X16POR (FRT S/D WDO RR W/STR RET)	97-98		6	11508231
25.	5-B2	10.710	WEATHERSTRIP, FRT S/D WDO UPR	97-98	Y07 (CC3, CF7)	LH	10236315
	5-B2	10.710	WEATHERSTRIP, FRT S/D WDO UPR	97-98	Y07 (C2L)	LH	10236315
	5-B2	10.710	WEATHERSTRIP, FRT S/D WDO UPR	97-98	Y07 (CC3, CF7)	RH	10236316
	5-B2	10.710	WEATHERSTRIP, FRT S/D WDO UPR	97-98	Y07 (C2L)	RH	10236316
26.		8.977	BOLT, RD CROWNED WA HD C/R M4.2X1.41X16POR (FRT S/D WDO UPR W/STR) (W/C2L)	97-98		8	11508231
		8.977	BOLT, RD CROWNED WA HD C/R M4.2X1.41X16POR (FRT S/D WDO UPR W/STR) (W/CC3, CF7)	97-98		4	11508231
27.	5-A28	10.703	CLIP, FRT S/D WDO W/STR RET	97-98	Y07 (CC3, CF7)	2	10408012
	5-A28	10.703	CLIP, FRT S/D WDO W/STR RET (RF PNL RET ALUM)	97-98	Y07 (C2L)	4	10408012
28.		8.977	BOLT, RD CROWNED WA HD C/R M4.2X1.41X16POR (FRT S/D WDO UPR W/STR RET) (W/C2L)	97-98		16	11508231
		8.977	BOLT, RD CROWNED WA HD C/R M4.2X1.41X16POR (FRT S/D WDO UPR W/STR RET) (W/CC3, CF7)	97-98		8	11508231
29.	5-B2	10.710	RETAINER, FRT S/D WDO UPR W/STR (RF PNL RET ALUM)	97-98	Y07 (CC3, CF7)	LH	10252849
	5-B2	10.710	RETAINER, FRT S/D WDO UPR W/STR (RF PNL RET ALUM)	97-98	Y07 (C2L)	LH	10252849
	5-B2	10.710	RETAINER, FRT S/D WDO UPR W/STR (RF PNL RET ALUM) (NON ENCAPSULATED)	97-98	Y07 (CC3, CF7)	RH	10252850
	5-B2	10.710	RETAINER, FRT S/D WDO UPR W/STR (RF PNL RET ALUM) (NON ENCAPSULATED)	97-98	Y07 (C2L)	RH	10252850
30.	5-N21	12.810	PANEL, RF	97-98	Y07	1	10289224
31.		8.977	BOLT, RD CROWNED WA HD C/R M4.2X1.41X16POR (RF L/OFF/WDO RR W/STR)	97-98		4	11508231
32.	5-N21	12.810	WEATHERSTRIP, RF LIFT OFF PNL/WDO RR	97-98	Y07	1	10415918
33.		8.921	NUT, U TYPE, MULTI THD, PREV TORQ, M4.2X1.41TAP, 8.1REACH, 0.65-3.80 PNLS 1065 PZOR (RF LIFT OFF PNL/WDO RR W/STR RET) (AC-DELCO #11513599)	97-98		6	11513599
34.	5-M9	21.552 A	WINDOW PKG, RF LIFT OFF (BLUE) (INSTALL .25) (TRANSPARENT) (12.810)	97-98	Y07 (CC3, C2L)	1	12370935

cardiagn.com

							1Y10-050
35.	5-N21	12.810	RETAINER, RF LIFT OFF PNL/WDO RR W/STR (PUSH IN) (#83) (BLACK) (4.8 HOLE) (14.685)	97-98	Y07	4	20538173
36.	5-N21	12.810	RETAINER, RF LIFT OFF PNL/WDO RR W/STR	97-98	Y07	1	10252874
37.		8.977	BOLT, RD CROWNED WA HD C/R M4.2X1.41X16POR (RF LIFT OFF PNL/WDO RR W/STR RET) ..	97-98	.....	4	11508231

RPO DEFINITIONS
CC3 – ROOF,SUN,REMOVEABLE PANELS(TRANSPARENT PLASTIC)
CF7 – ROOF,SUN,REMOVABLE,NON-TRANSPARENT
C2L – ROOF PACKAGE,DUAL REMOVEABLE

cardiagn.com

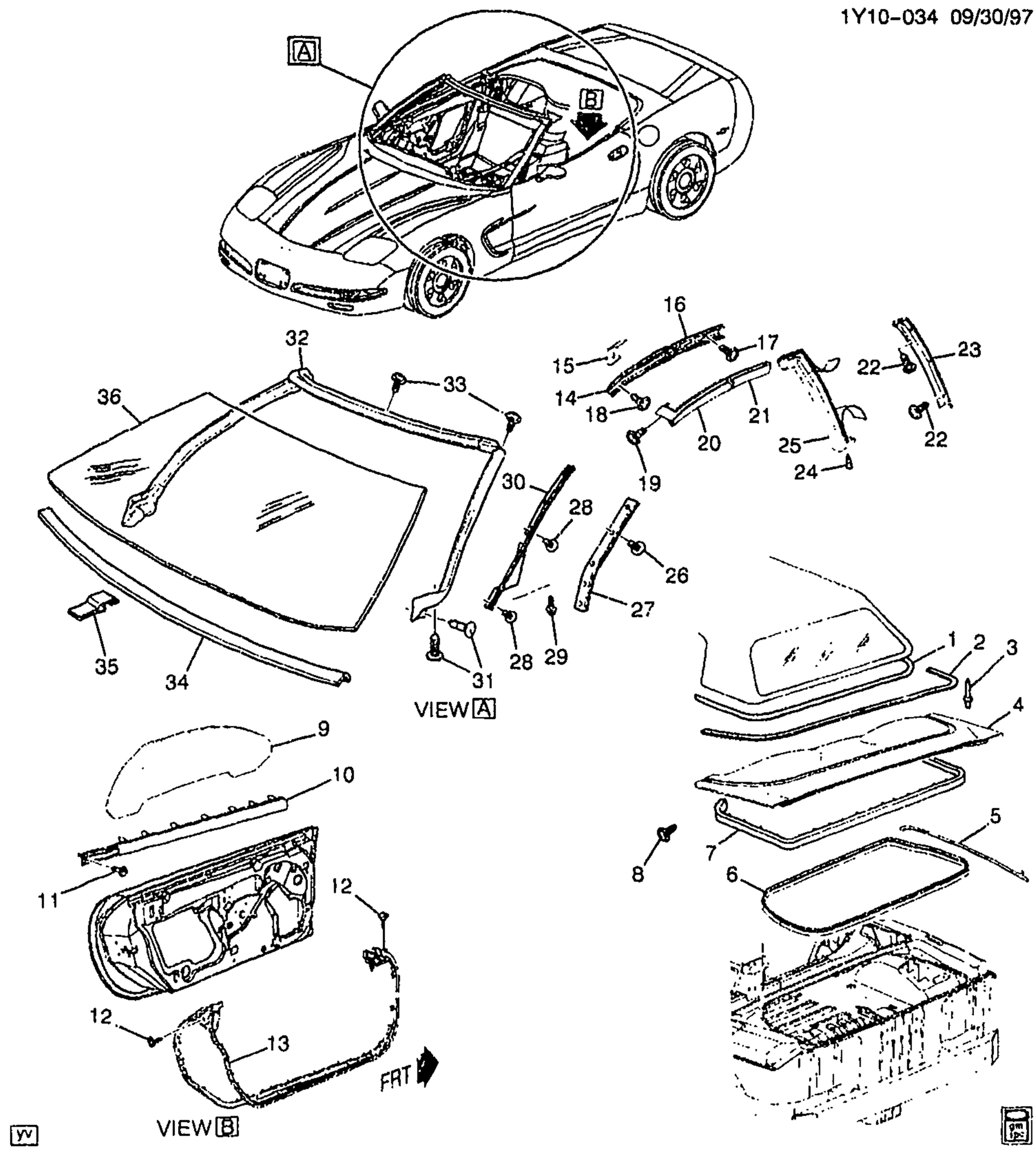

1Y10-034

1998-2002 Y67 BODY GLASS & WEATHERSTRIPS

1.	5-N26	13.346	WEATHERSTRIP, F/TOP RR	98-02	Y67 (C05)	1	10446551
2.	5-N18	12.170	PROTECTOR, F/TOP STOW COMPT LID	98-02	Y67	1	10279019
3.		8.967	RIVET-3/16X.430, STYLE 1C (F/TOP STOW COMPT LID HGE REINF)	98-02	.....	4	9440392

© 2001 GENERAL MOTORS SERVICE PARTS OPERATIONS-CHEVROLET-15Y

cardiagn.com

							1Y10-034
		8.967	RIVET-3/16X.430, STYLE 1C (F/TOP STOW COMPT LID LAT STKR REINF)	98-02		1	9440392
4.	5-N18	12.170	LID, F/TOP STOW COMPT	98-02	Y67	1	10414341
5.	5-N20	12.269	SEALING STRIP, R/CMPT LID AUX	98-02	Y67	2	10408626
6.	5-N20	12.269	WEATHERSTRIP, R/CMPT LID	98-02	Y67	1	10255033
7.	5-N18	12.170	WEATHERSTRIP, F/TOP STOW COMPT LID	98-02	Y67	1	10444523
8.	5-N21	12.684	RETAINER, BODY L/PLR UPR SEAL (BLACK) (4.8 HOLE) (14.685)	98-02	Y67	2	20538173
9.	5-A27	10.681	WINDOW, FRT S/D	98-02	Y	LH	10403189
	5-A27	10.681	WINDOW, FRT S/D	98-02	Y	RH	10403190
10.	5-B2	10.710	SEALING STRIP, FRT S/D WDO OTR	98-00	Y67	LH	10409129
	5-B2	10.710	SEALING STRIP, FRT S/D WDO OTR	98-01	Y67	RH	10409130
	5-B2	10.710	SEALING STRIP, FRT S/D WDO OTR	98-00	Y67	RH	10447043
	5-B2	10.710	SEALING STRIP, FRT S/D WDO OTR	01-02	Y67	LH	10313423
	5-B2	10.710	SEALING STRIP, FRT S/D WDO OTR	01-02	Y67	RH	10313424
11.		8.908	SCR LGE WASHER HEAD HI-LO BHL (FRT S/D WDO OTR S/STR) (8.977)	98-02		2	11509231
12.	5-A28	10.694	RETAINER, FRT S/D W/STR (BLACK) (4.8 HOLE) (14.685)	99-02	Y	6	20538173
	5-A28	10.694	RETAINER, FRT S/D W/STR (PAINT TO MATCH) (FITS .18 HOLE, .7 LG, .43 OD, NYLON) (14.630)	98-02	Y	2	20540336
13.	5-A28	10.694	WEATHERSTRIP, FRT S/D (EPDM COMBINATION)	98-02	Y	LH	10302723
	5-A28	10.694	WEATHERSTRIP, FRT S/D (EPDM COMBINATION)	98-02	Y	RH	10302724
14.	5-B2	10.710	RETAINER, FRT S/D WDO UPR FRT W/STR	98-00	Y67	RH	10252854
	5-B2	10.710	RETAINER, FRT S/D WDO UPR FRT W/STR	98-02	Y67	LH	10308189
	5-B2	10.710	RETAINER, FRT S/D WDO UPR FRT W/STR	01-02	Y67	RH	10308190
15.	5-A28	10.703	CLIP, FRT S/D WDO W/STR RET (RF PNL RET ALUM)	98-02	Y67	2	10408012
16.	5-A28	10.695	RETAINER, FRT S/D WDO UPR RR W/STR (14.120)	98-02	Y67	LH	10252855
	5-A28	10.695	RETAINER, FRT S/D WDO UPR RR W/STR (14.120)	98-02	Y67	RH	10252856
17.		8.977	SCREW, LG RND WA HD W/BLK NYL WA, 4.2X 1.41X13, 11-OD, DRILL PT, 6172, PEOR (FRT S/D WDO UPR RR W/STR RET)	98-02		4	10180421
18.		8.977	SCREW, LG RND WA HD W/BLK NYL WA, 4.2X 1.41X13, 11-OD, DRILL PT, 6172, PEOR (FRT S/D WDO UPR FRT W/STR RET)	98-02		6	10180421

cardiagn.com

							1Y10-034
19.		8.977	SCREW, LG RND WA HD W/BLK NYL WA, 4.2X 1.41X13, 11-OD, DRILL PT, 6172, PEOR (FRT S/D WDO UPR FRT W/STR)	98-02	.....	2	10180421
20.	5-B2	10.710	WEATHERSTRIP, FRT S/D WDO UPR FRT	98-02	Y67	LH	10236327
	5-B2	10.710	WEATHERSTRIP, FRT S/D WDO UPR FRT	98-02	Y67	RH	10236328
21.	5-B2	10.710	WEATHERSTRIP, FRT S/D WDO UPR RR	98-02	Y67	LH	10236329
	5-B2	10.710	WEATHERSTRIP, FRT S/D WDO UPR RR	98-02	Y67	RH	10236330
22.		8.977	SCREW, LG RND WA HD W/BLK NYL WA, 4.2X 1.41X13, 11-OD, DRILL PT, 6172, PEOR (FRT S/D WDO RR W/STR RET)	98-02	.....	8	10180421
23.	5-B2	10.710	RETAINER, FRT S/D WDO RR W/STR	98-99	Y67	RH	10252858
	5-B2	10.710	RETAINER, FRT S/D WDO RR W/STR	98-99	Y67	LH	10445410
	5-B2	10.710	RETAINER, FRT S/D WDO RR W/STR (USED ON VEHICLES WHERE FRONT END OF RETAINER IS SEALED TO REST OF RETAINER)	00	Y67 (1ST DES)	RH	10252858
	5-B2	10.710	RETAINER, FRT S/D WDO RR W/STR	00	Y67 (1ST DES)	LH	10445410
	5-B2	10.710	RETAINER, FRT S/D WDO RR W/STR	01-02	Y67	LH	10445410
	5-B2	10.710	RETAINER, FRT S/D WDO RR W/STR	01-02	Y67	RH	10445412
	5-B2	10.710	RETAINER, FRT S/D WDO RR W/STR (FLAT END ONE PIECE) (USED ON VEHICLES W/FRONT END OF RETAINER AS A SEPARATE PART THAT ATTACHES TO THE REST OF THE RETAINER W/BOLT/SCREWS)	00	Y67 (2ND DES)	LH	10445411
	5-B2	10.710	RETAINER, FRT S/D WDO RR W/STR (FLAT END ONE PIECE) (USED ON VEHICLES W/FRONT END OF RETAINER AS A SEPARATE PART THAT ATTACHES TO THE REST OF THE RETAINER W/BOLT/SCREWS)	00	Y67 (2ND DES)	RH	10445413
	5-B2	10.710	RETAINER, FRT S/D WDO RR W/STR (FLAT END ONE PIECE) ..	01-02	Y67	LH	10445411
	5-B2	10.710	RETAINER, FRT S/D WDO RR W/STR (FLAT END ONE PIECE) ..	01-02	Y67	RH	10445413
	5-B2	10.710	RETAINER, FRT S/D WDO RR W/STR (ONE PIECE CURVED) ...	00	Y67 (2ND DES)	LH	10445410
	5-B2	10.710	RETAINER, FRT S/D WDO RR W/STR (ONE PIECE CURVED) ...	00	Y67 (2ND DES)	RH	10445412
	5-B2	10.710	RETAINER, FRT S/D WDO RR W/STR (USE TOGETHER W/ P/N 10445410)	98-99	Y67	LH	10445411

cardiagn.com

							1Y10-034
	5-B2	10.710	RETAINER, FRT S/D WDO RR W/STR (USE TOGETHER W/ P/N 10445410)	00	Y67 (1ST DES)	LH	10445411
24.	5-B2	10.710	RETAINER, FRT S/D WDO RR W/STR (PUSH IN) (12.804)	99-02	Y67	2	20514862
	5-B2	10.710	RETAINER, FRT S/D WDO RR W/STR (PUSH IN) (UPR) (PAINT TO MATCH) (FITS .18 HOLE, .7 LG, .43 OD, NYLON) (14.630)	98	Y67	2	20540336
25.	5-B2	10.710	WEATHERSTRIP, FRT S/D WDO RR	98-02	Y67	LH	10415919
26.		8.977	BOLT, RD CROWNED WA HD C/R M4.2X1.41X16POR (FRT S/D WDO FRT W/STR RET)	98-02	.....	10	11508231
27.	5-B2	10.710	RETAINER, FRT S/D WDO FRT W/STR	98-02	Y67	LH	10252847
	5-B2	10.710	RETAINER, FRT S/D WDO FRT W/STR	98-02	Y67	RH	10252848
28.		8.977	SCREW, LG RND WA HD W/BLK NYL WA, 4.2X 1.41X13, 11-OD, DRILL PT, 6172, PEOR (W/S SI R/MLDG)	98-02	.....	6	10180421
29.		8.977	SCREW, LG RND WA HD W/BLK NYL WA, 4.2X 1.41X13, 11-OD, DRILL PT, 6172, PEOR (O/S RR VIEW MIR APLQ)	98-02	.....	2	10180421
30.	5-A8	10.093	MOLDING, W/S SI RVL (BLACK) .	98-02	Y07-67	LH	10299306
	5-A8	10.093	MOLDING, W/S SI RVL (BLACK) .	98-02	Y07-67	RH	10299307
31.	5-N21	12.807	RETAINER, W/S FRM W/STR (PAINT TO MATCH) (FITS .18 HOLE, .7 LG, .43 OD, NYLON) (14.630)	98-02	Y	4	20540336
32.	5-N21	12.807	WEATHERSTRIP, W/S FRM	98-02	Y67	1	10305948
33.		8.977	SCREW, LG RND WA HD W/BLK NYL WA, 4.2X 1.41X13, 11-OD, DRILL PT, 6172, PEOR (W/S FRM W/STR) (POSN #1)	98-02	.....	7	10180421
34.	5-A8	10.092	SEAL, W/S (POSN #2) (1420 MM LG)	98-02	Y	1	10299765
35.		N.S.	SUPPORT, W/S		.....		
36.	5-A8	10.027	WINDSHIELD, ...	98	Y67	1	10295097
	5-A8	10.027	WINDSHIELD, ...	99-00	Y37-67 (EXC UV6)	1	10295097
	5-A8	10.027	WINDSHIELD, ...	99-00	Y37-67 (UV6)	1	10426714
	5-A8	10.027	WINDSHIELD, ...	01-02	Y67 (EXC UV6)	1	10295097
	5-A8	10.027	WINDSHIELD, ...	01-02	Y67 (UV6)	1	10426714

RPO DEFINITIONS
C05 - ROOF,CONVERTIBLE,FOLDING
UV6 - DISPLAY,HEADUP

cardiagn.com

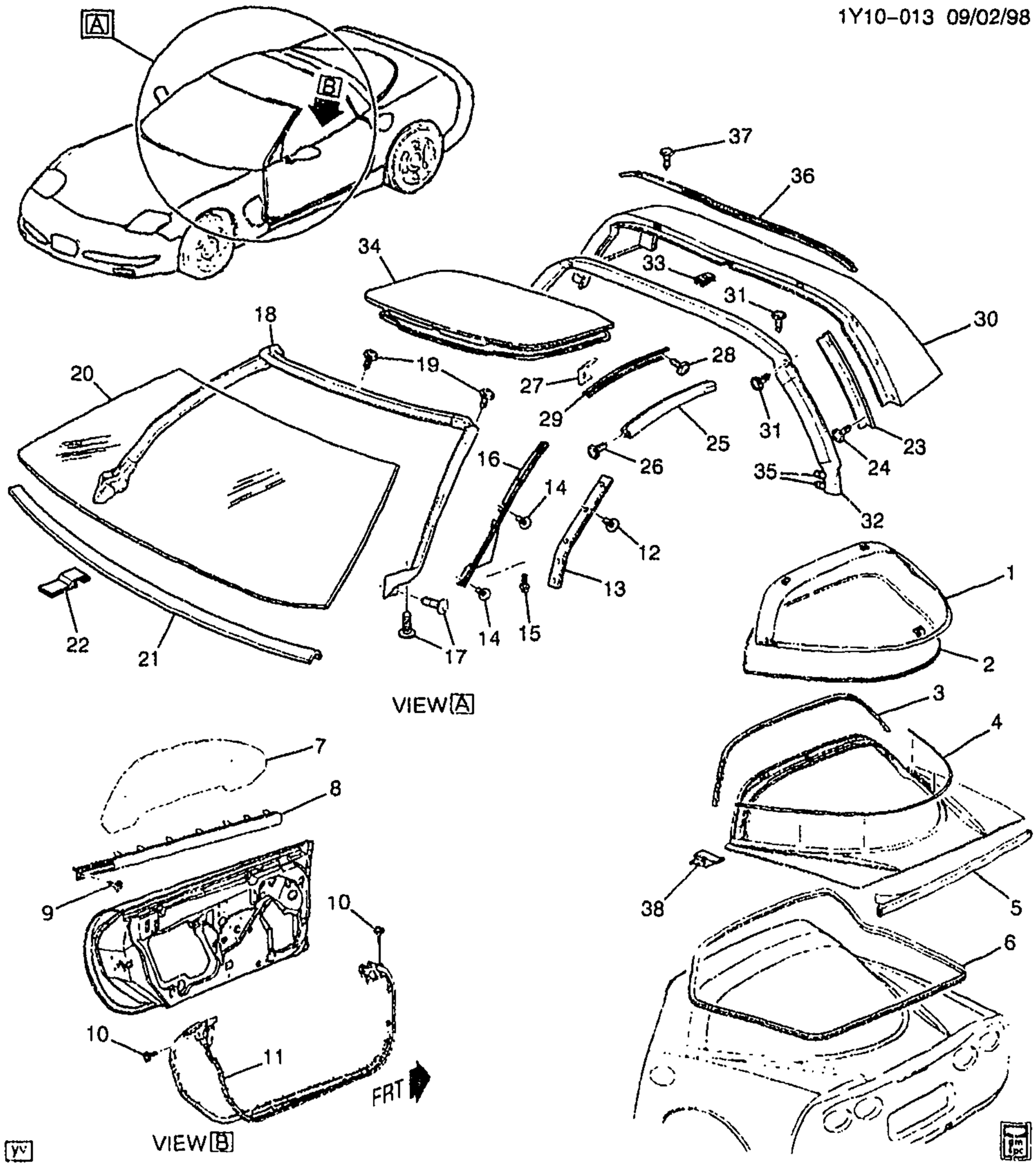

1999-2000 Y07 BODY GLASS & WEATHERSTRIPS

1.	5-N19	12.180	WINDOW, R/CMPT LIFT (HTCH GLS)	99-00	Y07	1	10247317
		8.800	ADHESIVE KIT, GLASS (URETHANE) (R/CMPT L/WDO)	99-00		1	12346302
2.	5-N20	12.269	SEAL, R/CMPT L/WDO RR AUX (POSN #1)	99-00	Y07	1	10401665

cardiagn.com

							1Y10-013
3.	5-N20	12.269	SEAL, R/CMPT L/WDO RR AUX (FRT SECONDARY SEAL)	99-00	Y07	1	10438026
4.	5-N20	12.269	SEAL, R/CMPT L/WDO FRT AUX	99-00	Y07	1	10401667
5.	5-N20	12.269	WEATHERSTRIP, R/CMPT L/WDO	97-00	Y07	1	10280750
6.	5-N20	12.269	WEATHERSTRIP, R/CMPT L/WDO	99-00	Y07	1	10236980
7.	5-A27	10.681	WINDOW, FRT S/D	99-00	Y	LH	10403189
	5-A27	10.681	WINDOW, FRT S/D	99-00	Y	RH	10403190
8.	5-B2	10.710	SEALING STRIP, FRT S/D WDO OTR	99-00	Y07	LH	10447039
	5-B2	10.710	SEALING STRIP, FRT S/D WDO OTR	99-00	Y07	RH	10447040
9.		8.908	SCR LGE WASHER HEAD HI-LO BHL (FRT S/D WDO OTR S/STR) (8.977)	99-00		2	11509231
10.	5-A28	10.694	RETAINER, FRT S/D W/STR (BLACK) (4.8 HOLE) (14.685)	99-00	Y	6	20538173
	5-A28	10.694	RETAINER, FRT S/D W/STR (PAINT TO MATCH) (FITS .18 HOLE, .7 LG, .43 OD, NYLON) (14.630)	99-00	Y	2	20540336
11.	5-A28	10.694	WEATHERSTRIP, FRT S/D (EPDM COMBINATION)	99-00	Y	LH	10302723
	5-A28	10.694	WEATHERSTRIP, FRT S/D (EPDM COMBINATION)	99-00	Y	RH	10302724
12.		8.977	BOLT, RD CROWNED WA HD C/R M4.2X1.41X16POR (FRT S/D WDO FRT W/STR RET)	99-00		10	11508231
13.	5-B2	10.710	RETAINER, FRT S/D WDO FRT W/STR	99-00	Y07	LH	10252847
	5-B2	10.710	RETAINER, FRT S/D WDO FRT W/STR	99-00	Y07	RH	10252848
14.		8.977	SCREW, LG RND WA HD W/BLK NYL WA, 4.2X 1.41X13, 11-OD, DRILL PT, 6172, PEOR (W/S SI R/MLDG)	99-00		6	10180421
15.		8.977	SCREW, LG RND WA HD W/BLK NYL WA, 4.2X 1.41X13, 11-OD, DRILL PT, 6172, PEOR (O/S RR VIEW MIR APLQ)	99-00		2	10180421
16.	5-A8	10.093	MOLDING, W/S SI RVL (BLACK)	99-00	Y07-67	LH	10299306
	5-A8	10.093	MOLDING, W/S SI RVL (BLACK)	99-00	Y07-67	RH	10299307
17.	5-N21	12.807	RETAINER, W/S FRM W/STR (PAINT TO MATCH) (FITS .18 HOLE, .7 LG, .43 OD, NYLON) (14.630)	99-00	Y	4	20540336
18.	5-N21	12.807	WEATHERSTRIP, W/S FRM	99-00	Y07	1	10432623
19.		8.977	SCREW, LG RND WA HD W/BLK NYL WA, 4.2X 1.41X13, 11-OD, DRILL PT, 6172, PEOR (W/S FRM W/STR)	99-00		7	10180421
20.	5-A8	10.027	WINDSHIELD,	99-00	Y07 (EXC UV6)	1	10295096
	5-A8	10.027	WINDSHIELD,	99-00	Y07 (UV6)	1	10426713
21.	5-A8	10.092	SEAL, W/S (POSN #2) (1420 MM LG)	99-00	Y	1	10299765
22.		N.S.	SUPPORT, W/S				

cardiagn.com

							1Y10-013
23.	5-B2	10.710	RETAINER, FRT S/D WDO RR W/STR	99-00	Y07	LH	10299393
	5-B2	10.710	RETAINER, FRT S/D WDO RR W/STR	99-00	Y07	RH	10299394
24.		8.977	BOLT, RD CROWNED WA HD C/R M4.2X1.41X16POR (FRT S/D WDO RR W/STR RET)	99-00		6	11508231
25.	5-B2	10.710	WEATHERSTRIP, FRT S/D WDO UPR	99-00	Y07 (CC3, CF7)	LH	10236315
	5-B2	10.710	WEATHERSTRIP, FRT S/D WDO UPR	99-00	Y07 (C2L)	LH	10236315
	5-B2	10.710	WEATHERSTRIP, FRT S/D WDO UPR	99-00	Y07 (CC3, CF7)	RH	10236316
	5-B2	10.710	WEATHERSTRIP, FRT S/D WDO UPR	99-00	Y07 (C2L)	RH	10236316
26.		8.977	BOLT, RD CROWNED WA HD C/R M4.2X1.41X16POR (FRT S/D WDO UPR W/STR) (W/C2L)	99-00		8	11508231
		8.977	BOLT, RD CROWNED WA HD C/R M4.2X1.41X16POR (FRT S/D WDO UPR W/STR) (W/CC3, CF7)	99-00		4	11508231
27.	5-A28	10.703	CLIP, FRT S/D WDO W/STR RET	99-00	Y07 (CC3, CF7)	2	10408012
	5-A28	10.703	CLIP, FRT S/D WDO W/STR RET (RF PNL RET ALUM)	99-00	Y07 (C2L)	4	10408012
28.		8.977	BOLT, RD CROWNED WA HD C/R M4.2X1.41X16POR (FRT S/D WDO UPR W/STR RET) (W/C2L)	99-00		16	11508231
		8.977	BOLT, RD CROWNED WA HD C/R M4.2X1.41X16POR (FRT S/D WDO UPR W/STR RET) (W/CC3, CF7)	99-00		8	11508231
29.	5-B2	10.710	RETAINER, FRT S/D WDO UPR W/STR (RF PNL RET ALUM)	99-00	Y07 (CC3, CF7)	LH	10252849
	5-B2	10.710	RETAINER, FRT S/D WDO UPR W/STR (RF PNL RET ALUM)	99-00	Y07 (C2L)	LH	10252849
	5-B2	10.710	RETAINER, FRT S/D WDO UPR W/STR (RF PNL RET ALUM) (NON ENCAPSULATED)	99-00	Y07 (CC3, CF7)	RH	10252850
	5-B2	10.710	RETAINER, FRT S/D WDO UPR W/STR (RF PNL RET ALUM) (NON ENCAPSULATED)	99-00	Y07 (C2L)	RH	10252850
30.	5-N21	12.810	PANEL, RF	99-00	Y07	1	10289224
31.		8.977	BOLT, RD CROWNED WA HD C/R M4.2X1.41X16POR (RF L/OFF/WDO RR W/STR)	99-00		4	11508231
32.	5-N21	12.810	WEATHERSTRIP, RF LIFT OFF PNL/WDO RR	99-00	Y07	1	10415916
33.		8.921	NUT, U TYPE, MULTI THD, PREV TORQ, M4.2X1.41TAP, 8.1REACH, 0.65-3.80 PNLS 1065 PZOR (RF LIFT OFF PNL/WDO RR W/STR RET) (AC-DELCO #11513599)	99-00		6	11513599
34.	5-M9	21.552 A	WINDOW PKG, RF LIFT OFF (BLUE) (INSTALL .25) (TRANSPARENT) (12.810)	99-00	Y07 (CC3, C2L)	1	12370935

cardiagn.com

							1Y10–013
35.	5–N21	12.810	RETAINER, RF LIFT OFF PNL/WDO RR W/STR (PUSH IN) (#83) (BLACK) (4.8 HOLE) (14.685)	99–00	Y07	4	20538173
36.	5–N21	12.810	RETAINER, RF LIFT OFF PNL/WDO RR W/STR	99–00	Y07	1	10252874
37.		8.977	BOLT, RD CROWNED WA HD C/R M4.2X1.41X16POR (RF LIFT OFF PNL/WDO RR W/STR RET) ..	99–00	.....	4	11508231
38.	5–N20	12.269	RETAINER, R/CMPT L/WDO SEAL	99–00	Y07	2	10427824

RPO DEFINITIONS
CC3 – ROOF,SUN,REMOVEABLE PANELS(TRANSPARENT PLASTIC)
CF7 – ROOF,SUN,REMOVABLE,NON–TRANSPARENT
C2L – ROOF PACKAGE,DUAL REMOVEABLE
UV6 – DISPLAY,HEADUP

cardiagn.com

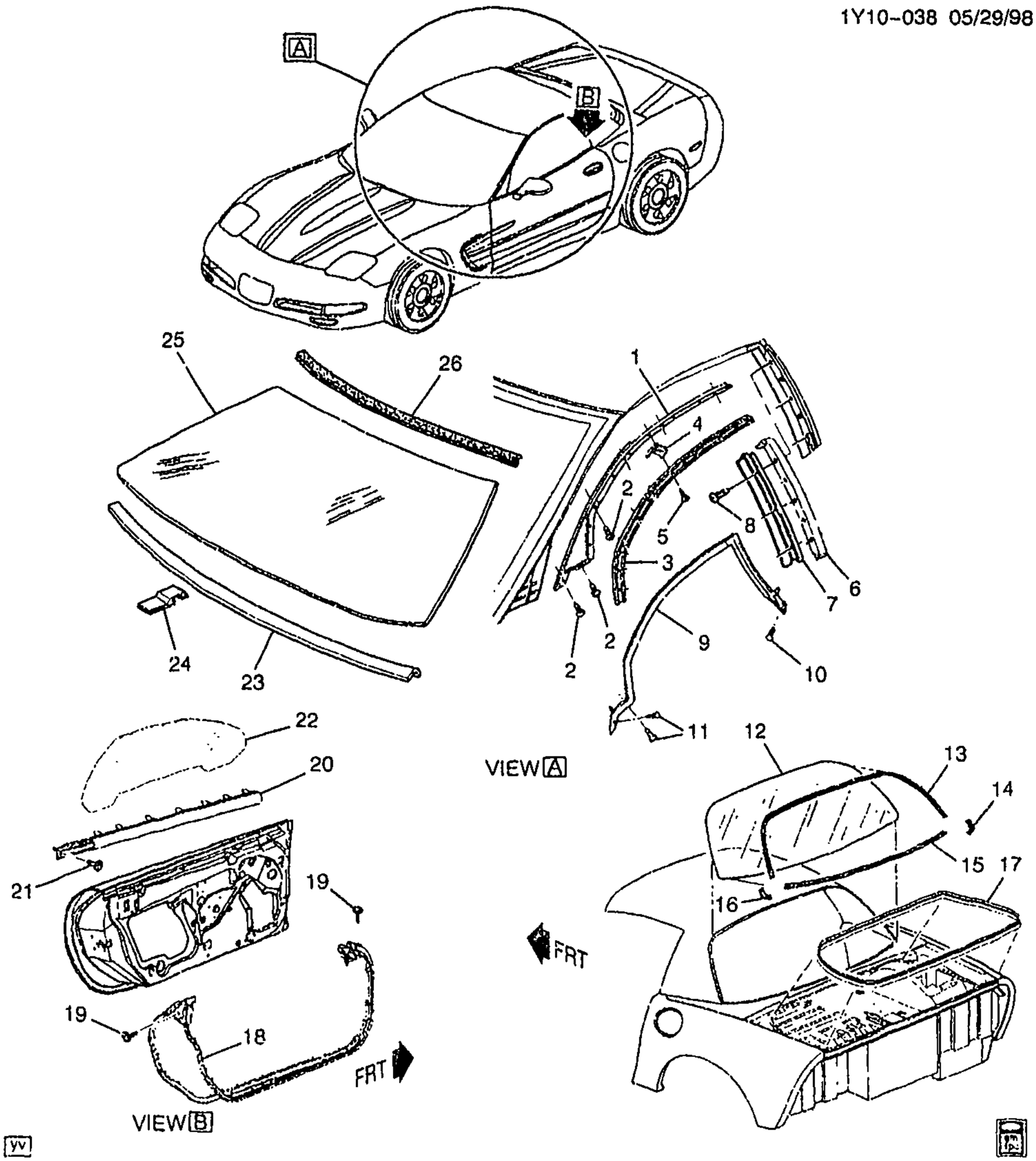

1Y10-038

1999-2002 Y37 BODY GLASS & WEATHERSTRIPS

1.	5-A8	10.093	MOLDING, W/S SI RVL (BLACK) .	99-02	Y37	RH	10422996
	5-A8	10.093	MOLDING, W/S SI RVL (BLACK) .	99-02	Y37	LH	10422997
2.		8.977	SCREW, LG RND WA HD W/BLK NYL WA, 4.2X 1.41X13, 11-OD, DRILL PT, 6172, PEOR (W/S SI R/MLDG)	99-02	Y	12	10180421

cardiagn.com

							1Y10-038
3.	5-A28	10.694	RETAINER, FRT S/D W/STR FRT UPR (METAL STRIP RETAINS FRT UPR W/STR) (10.695)	99-02	Y37	LH	10297742
	5-A28	10.694	RETAINER, FRT S/D W/STR FRT UPR (METAL STRIP RETAINS FRT UPR W/STR) (10.695)	99-02	Y37	RH	10297743
4.	5-A28	10.703	CLIP, FRT S/D WDO W/STR RET (RF PNL RET ALUM)	99-02	Y37	2	10408012
5.		8.977	BOLT, RD CROWNED WA HD C/R M4.2X1.41X16POR (RF LIFT OFF PNL/WDO RR W/STR RET) ..	99-02	Y	18	11508231
6.	5-N18	12.113	MOLDING, BODY L/PLR UPR RVL (12.942)	99-02	Y37	RH	10422994
	5-N18	12.113	MOLDING, BODY L/PLR UPR RVL (12.942)	99-02	Y37	LH	10422995
7.	5-A28	10.694	RETAINER, FRT S/D W/STR UPR RR (METAL STRIP RETAINS RR UPR W/STR) (10.695)	99-02	Y37	RH	10419267
	5-A28	10.694	RETAINER, FRT S/D W/STR UPR RR (METAL STRIP RETAINS RR UPR W/STR) (10.695)	99-02	Y37	LH	10419268
8.		8.977	BOLT, RD CROWNED WA HD C/R M4.2X1.41X16POR (RF LIFT OFF PNL/WDO RR W/STR RET) ..	99-02	Y	6	11508231
9.	5-B2	10.710	WEATHERSTRIP, FRT S/D WDO UPR FRT	99-02	Y37	RH	10310680
	5-B2	10.710	WEATHERSTRIP, FRT S/D WDO UPR FRT	99-02	Y37	LH	10415921
10.	5-B2	10.710	RETAINER, FRT S/D WDO UPR FRT W/STR (PUSH IN) (BLACK) (4.8 HOLE) (14.685)	99-02	Y37	2	20538173
	5-B2	10.710	RETAINER, FRT S/D WDO UPR FRT W/STR (PUSH IN) (PAINT TO MATCH) (FITS .18 HOLE, .7 LG, .43 OD, NYLON) (14.630)	99-02	Y37	6	20540336
11.	5-B2	10.710	RETAINER, FRT S/D WDO UPR FRT W/STR (PUSH IN) (BLACK) (4.8 HOLE) (14.685)	99-02	Y37	2	20538173
	5-B2	10.710	RETAINER, FRT S/D WDO UPR FRT W/STR (PUSH IN) (PAINT TO MATCH) (FITS .18 HOLE, .7 LG, .43 OD, NYLON) (14.630)	99-02	Y37	6	20540336
12.	5-C7	11.204	WINDOW, RR	99-02	Y37	1	10424406
13.		N.S.	MOLDING, R/WDO UPR RVL (PART OF R/WDO RVL MLDG IN GRP 11.208)		.....		
14.		N.S.	MOLDING, R/WDO RVL (PART OF R/WDO RVL MLDG IN GRP 11.208)		....	RH	
15.		N.S.	MOLDING, R/WDO LWR RVL (PART OF R/WDO RVL MLDG IN GRP 11.208)		.....		
16.		N.S.	MOLDING, R/WDO RVL (PART OF R/WDO RVL MLDG IN GRP 11.208)		.....	LH	
17.	5-N20	12.269	WEATHERSTRIP, R/CMPT LID ...	99-02	Y37	1	10255033
18.	5-A28	10.694	WEATHERSTRIP, FRT S/D (EPDM COMBINATION)	99-02	Y	LH	10302723

cardiagn.com

							1Y10–038
	5–A28	10.694	WEATHERSTRIP, FRT S/D (EPDM COMBINATION)	99–02	Y	RH	10302724
19.	5–A28	10.694	RETAINER, FRT S/D W/STR (BLACK) (4.8 HOLE) (14.685)	99–02	Y	6	20538173
	5–A28	10.694	RETAINER, FRT S/D W/STR (PAINT TO MATCH) (FITS .18 HOLE, .7 LG, .43 OD, NYLON) (14.630)	99–02	Y	2	20540336
20.	5–B2	10.710	SEALING STRIP, FRT S/D WDO OTR	99–00	Y37	LH	10431426
	5–B2	10.710	SEALING STRIP, FRT S/D WDO OTR	99–00	Y37	RH	10447046
	5–B2	10.710	SEALING STRIP, FRT S/D WDO OTR	01–02	Y37	RH	10313426
	5–B2	10.710	SEALING STRIP, FRT S/D WDO OTR	01–02	Y37	LH	10313427
21.		8.908	SCR LGE WASHER HEAD HI–LO BHL (FRT S/D WDO OTR S/STR) (8.977)	99–02	.....	2	11509231
22.	5–A27	10.681	WINDOW, FRT S/D	99–02	Y	LH	10403189
	5–A27	10.681	WINDOW, FRT S/D	99–02	Y	RH	10403190
23.	5–A8	10.092	SEAL, W/S (POSN #2) (1420 MM LG)	99–02	Y	1	10299765
24.		N.S.	SUPPORT, W/S		.....		
25.	5–A8	10.027	WINDSHIELD, ...	99–00	Y37–67 (EXC UV6)	1	10295097
	5–A8	10.027	WINDSHIELD, ...	99–00	Y37–67 (UV6)	1	10426714
	5–A8	10.027	WINDSHIELD, ...	01–02	Y37	1	10426201
26.	5–A8	10.093	MOLDING, W/S UPR RVL	99–02	Y37	1	10427732

RPO DEFINITIONS
UV6 – DISPLAY,HEADUP

cardiagn.com

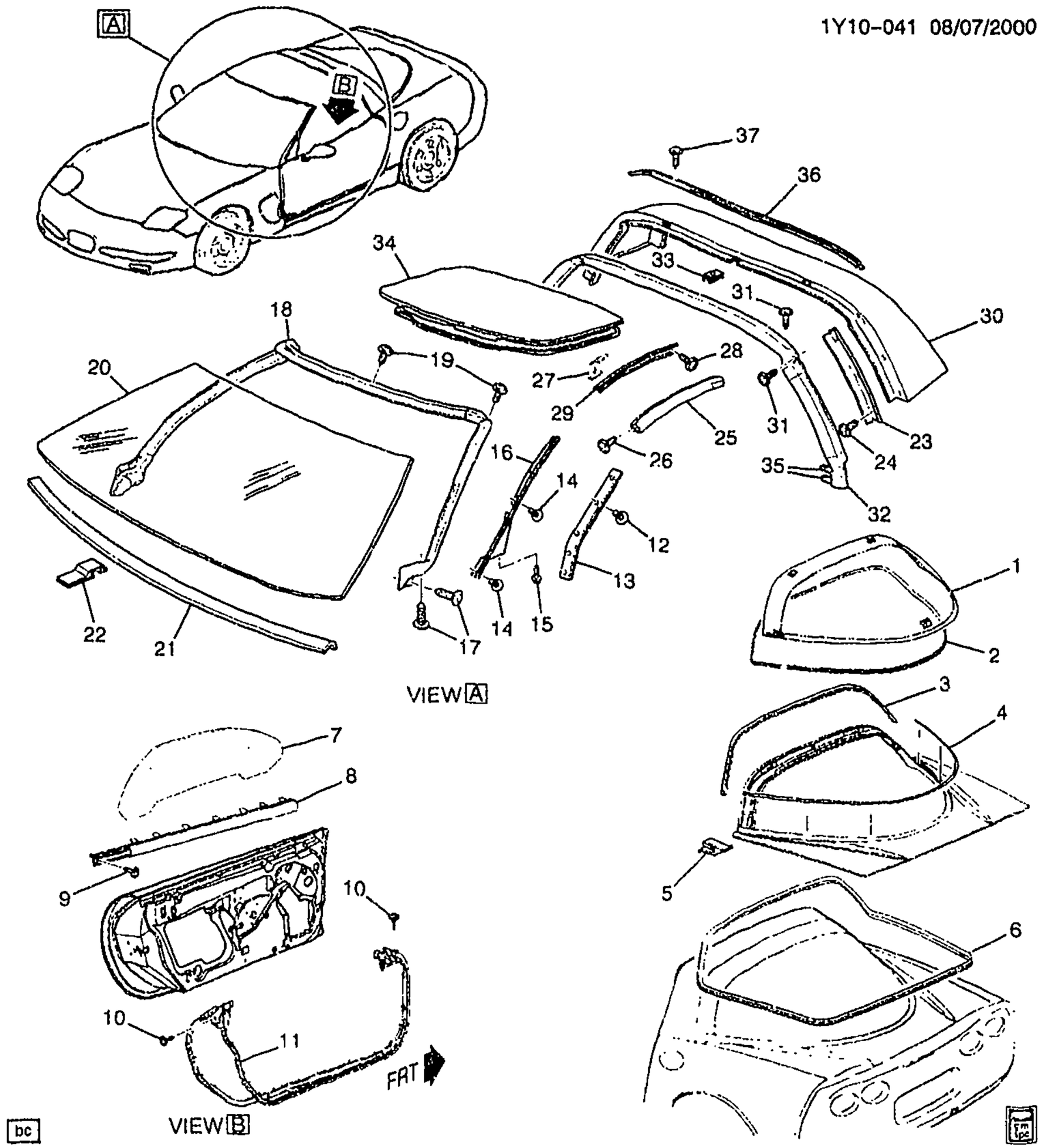

2001-2002 Y07 BODY GLASS & WEATHERSTRIPS

1.	5-N19	12.180	WINDOW, R/CMPT LIFT (HTCH GLS)	01-02	Y07	1	10247317
		8.800	ADHESIVE KIT, GLASS (URETHANE) (R/CMPT L/WDO)	01-02		1	12346392
2.	5-N20	12.269	SEAL, R/CMPT L/WDO RR AUX (POSN #1)	01-02	Y07	1	10401665

© 2001 GENERAL MOTORS SERVICE PARTS OPERATIONS--CHEVROLET--15Y

cardiagn.com

							1Y10-041
3.	5-N20	12.269	SEAL, R/CMPT L/WDO RR AUX (FRT SECONDARY SEAL)	01-02	Y07	1	10438026
4.	5-N20	12.269	SEAL, R/CMPT L/WDO FRT AUX .	01-02	Y07	1	10401667
5.	5-N20	12.269	RETAINER, R/CMPT L/WDO SEAL	01-02	Y07	2	10427824
6.	5-N20	12.269	WEATHERSTRIP, R/CMPT L/WDO (EPDM EXTRUDED)	01-02	Y07	1	10236980
7.	5-A27	10.681	WINDOW, FRT S/D	01-02	Y	LH	10403189
	5-A27	10.681	WINDOW, FRT S/D	01-02	Y	RH	10403190
8.	5-B2	10.710	SEALING STRIP, FRT S/D WDO OTR	01-02	Y07	RH	10313420
	5-B2	10.710	SEALING STRIP, FRT S/D WDO OTR	01-02	Y07	LH	10313421
9.		8.908	SCR LGE WASHER HEAD HI-LO BHL (FRT S/D WDO CTR S/STR) (8.977)	01-02	.....	2	11509231
10.	5-A28	10.694	RETAINER, FRT S/D W/STR (BLACK) (4.8 HOLE) (14.685)	01-02	Y	6	20538173
	5-A28	10.694	RETAINER, FRT S/D W/STR (PAINT TO MATCH) (FITS .18 HOLE, .7 LG, .43 OD, NYLON) (14.630)	01-02	Y	2	20540336
11.	5-A28	10.694	WEATHERSTRIP, FRT S/D (EPDM COMBINATION)	01-02	Y	LH	10302723
	5-A28	10.694	WEATHERSTRIP, FRT S/D (EPDM COMBINATION)	01-02	Y	RH	10302724
12.		8.977	BOLT, RD CROWNED WA HD C/R M4.2X1.41X16POR (FRT S/D WDO FRT W/STR RET)	01-02	.....	10	11508231
13.	5-B2	10.710	RETAINER, FRT S/D WDO FRT W/STR	01-02	Y07	LH	10252847
	5-B2	10.710	RETAINER, FRT S/D WDO FRT W/STR	01-02	Y07	RH	10252848
14.		8.977	SCREW, LG RND WA HD W/BLK NYL WA, 4.2X 1.41X13, 11-OD, DRILL PT, 6172, PEOR (W/S SI R/MLDG)	01-02	.....	6	10180421
15.		8.977	SCREW, LG RND WA HD W/BLK NYL WA, 4.2X 1.41X13, 11-OD, DRILL PT, 6172, PEOR (O/S RR VIEW MIR APLQ)	01-02	.....	2	10180421
16.	5-A8	10.093	MOLDING, W/S SI RVL (BLACK)	01-02	Y07-67	LH	10299306
	5-A8	10.093	MOLDING, W/S SI RVL (BLACK) .	01-02	Y07-67	RH	10299307
17.	5-N21	12.807	RETAINER, W/S FRM W/STR (PAINT TO MATCH) (FITS .18 HOLE, .7 LG, .43 OD, NYLON) (14.630)	01-02	Y	4	20540336
18.	5-N21	12.807	WEATHERSTRIP, W/S FRM	01-02	Y07	1	10432623
19.		8.977	SCREW, LG RND WA HD W/BLK NYL WA, 4.2X 1.41X13, 11-OD, DRILL PT, 6172, PEOR (W/S FRM W/STR)	01-02	.....	7	10180421
20.	5-A8	10.027	WINDSHIELD, ...	01-02	Y07 (EXC UV6)	1	10295096
	5-A8	10.027	WINDSHIELD, ...	01-02	Y07 (UV6)	1	10426713
21.	5-A8	10.092	SEAL, W/S (POSN #2) (1420 MM LG)	01-02	Y	1	10299765
22.		N.S.	SUPPORT, W/S		.....		

cardiagn.com

							1Y10-041
23.	5-B2	10.710	RETAINER, FRT S/D WDO RR W/STR	01-02	Y07	RH	10299394
	5-B2	10.710	RETAINER, FRT S/D WDO RR W/STR	01-02	Y07	LH	10299393
24.		8.977	BOLT, RD CROWNED WA HD C/R M4.2X1.41X16POR (FRT S/D WDO RR W/STR RET)	01-02		6	11508231
25.	5-B2	10.710	WEATHERSTRIP, FRT S/D WDO UPR	01-02	Y07 (CC3, CF7)	LH	10313370
	5-B2	10.710	WEATHERSTRIP, FRT S/D WDO UPR	01-02	Y07 (CC3, CF7)	RH	10313371
	5-B2	10.710	WEATHERSTRIP, FRT S/D WDO UPR	01-02	Y07 (C2L)	RH	10313371
	5-B2	10.710	WEATHERSTRIP, FRT S/D WDO UPR	01-02	Y07 (C2L)	LH	10313370
26.		8.977	BOLT, RD CROWNED WA HD C/R M4.2X1.41X16POR (FRT S/D WDO UPR W/STR) (W/C2L)	01-02		8	11508231
		8.977	BOLT, RD CROWNED WA HD C/R M4.2X1.41X16POR (FRT S/D WDO UPR W/STR) (W/CC3, CF7)	01-02		4	11508231
27.	5-A28	10.703	CLIP, FRT S/D WDO W/STR RET	01-02	Y07 (CC3, CF7)	2	10408012
	5-A28	10.703	CLIP, FRT S/D WDO W/STR RET (RF PNL RET ALUM)	01-02	Y07 (C2L)	4	10408012
28.		8.977	BOLT, RD CROWNED WA HD C/R M4.2X1.41X16POR (FRT S/D WDO UPR W/STR RET) (W/C2L)	01-02		16	11508231
		8.977	BOLT, RD CROWNED WA HD C/R M4.2X1.41X16POR (FRT S/D WDO UPR W/STR RET) (W/CC3, CF7)	01-02		8	11508231
29.	5-B2	10.710	RETAINER, FRT S/D WDO UPR W/STR (RF PNL RET ALUM)	01-02	Y07 (CC3, CF7)	LH	10252849
	5-B2	10.710	RETAINER, FRT S/D WDO UPR W/STR (RF PNL RET ALUM)	01-02	Y07 (C2L)	LH	10252849
	5-B2	10.710	RETAINER, FRT S/D WDO UPR W/STR (RF PNL RET ALUM) (NON ENCAPSULATED)	01-02	Y07 (CC3, CF7)	RH	10252850
	5-B2	10.710	RETAINER, FRT S/D WDO UPR W/STR (RF PNL RET ALUM) (NON ENCAPSULATED)	01-02	Y07 (C2L)	RH	10252850
30.	5-N21	12.810	PANEL, RF	01-02	Y07	1	10289224
31.		8.977	BOLT, RD CROWNED WA HD C/R M4.2X1.41X16POR (RF L/OFF/WDO RR W/STR)	01-02		4	11508231
32.	5-N21	12.810	WEATHERSTRIP, RF LIFT OFF PNL/WDO RR	01-02	Y07	1	10415918
33.		9.921	NUT, U TYPE, MULTI THD, PREV TORQ, M4.2X1.41TAP, 8.1REACH, 0.65-3.80 PNLS 1065 PZOR (RF LIFT OFF PNL/WDO RR W/STR RET) (AC-DELCO #11513599)	01-02		6	11513599
34.	5-M9	21.552 A	WINDOW PKG, RF LIFT OFF (BLUE) (INSTALL .25) (TRANSPARENT) (12.810)	01	Y07 (CC3, C2L)	1	12370935
	5-M9	21.552 A	WINDOW PKG, RF LIFT OFF (BLUE) (INSTALL .25) (TRANSPARENT) (12.810)	02	Y07 (CC3, C2L)	1	12370935

cardiagn.com

							1Y10–041
35.	5–N21	12.810	RETAINER, RF LIFT OFF PNL/WDO RR W/STR (PUSH IN) (#83) (BLACK) (4.8 HOLE) (14.685)	01–02	Y07	4	20538173
36.	5–N21	12.810	RETAINER, RF LIFT OFF PNL/WDO RR W/STR	01–02	Y07	1	10252874
37.		8.977	BOLT, RD CROWNED WA HD C/R M4.2X1.41X16POR (RF LIFT OFF PNL/WDO RR W/STR RET) ..	01–02	.....	4	11508231

RPO DEFINITIONS
CC3 – ROOF,SUN,REMOVEABLE PANELS(TRANSPARENT PLASTIC)
CF7 – ROOF,SUN,REMOVABLE,NON–TRANSPARENT
C2L – ROOF PACKAGE,DUAL REMOVEABLE
UV6 – DISPLAY,HEADUP

cardiagn.com

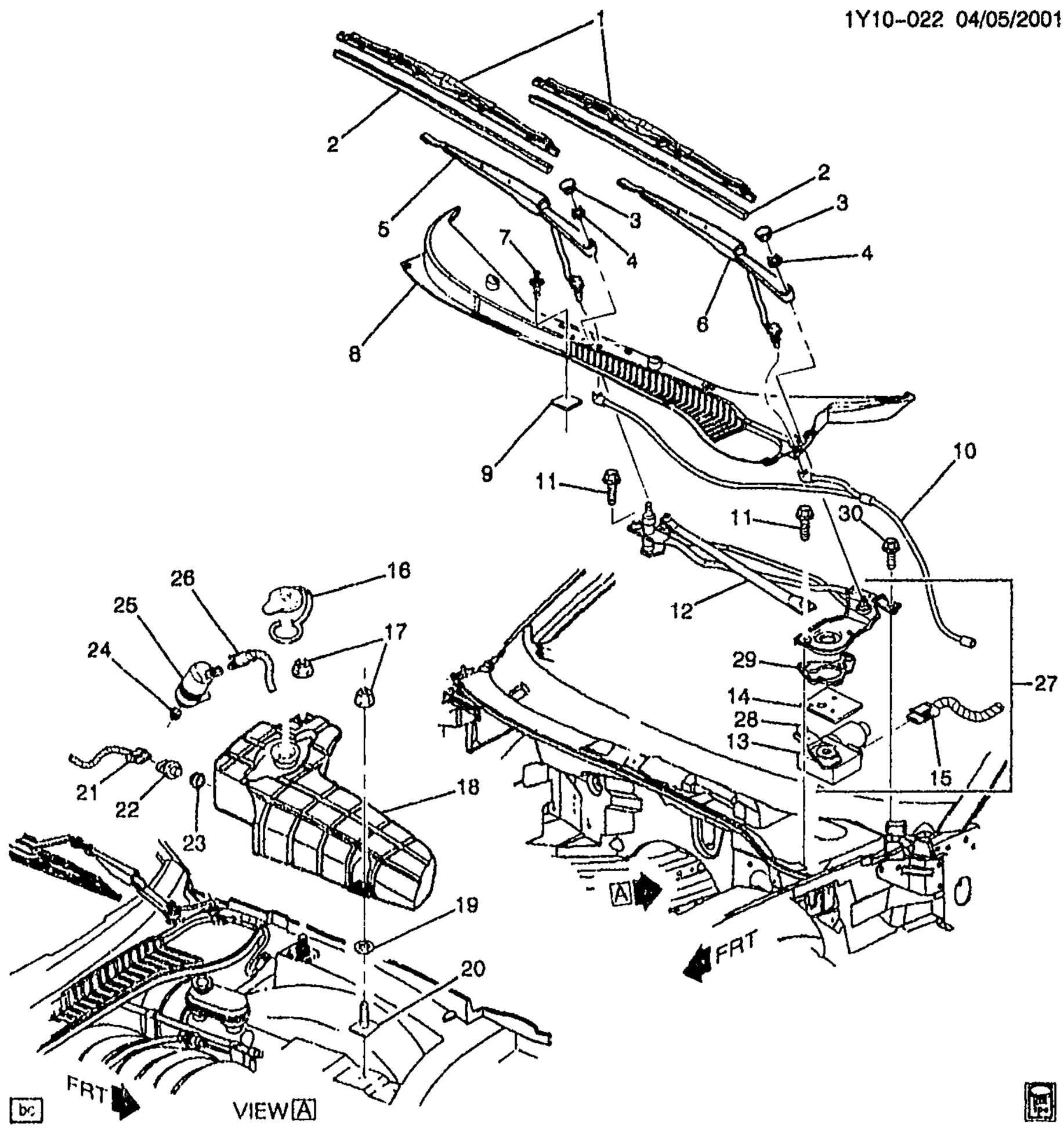

1Y10-022

1997-2002 Y WIPER SYSTEM/WINDSHIELD

1.	5-A9	10.146	BLADE, WSW (INCLS 2) (22") (TRICO)	97-02	Y	2	10418003
	5-A9	10.146	BLADE, WSW (INCLS 2) (22") (AC-DELCO #18-22ASP)	98-99	Y	2	12481121
	5-A9	10.146	BLADE, WSW (INCLS 2) (22") (16.480) (AC-DELCO #18-22AS)	99	Y	2	12481110

cardiagn.com

							1Y10-022
	5-A9	10.146	BLADE, WSW (INCLS 2) (22") (16.480) (AC-DELCO #18-22WW)	99	Y	2	12481139
2.	5-A9	10.146	WIPER, W/S (PART OF 1) (22") (TRICO)	97-02	Y	2	22143943
	5-A9	10.146	WIPER, W/S (9MM) (PART OF 1) (22") (TRICO) (AC-DELCO #18-22RFW)	99	Y	2	12481164
3.	5-A9	10.147	CAP, WSW TRANS NUT	97-02	Y	2	22155703
4.	5-A9	10.147	NUT, WSW ARM (8X1.25X6.8 GM510M)	97-02	Y	2	3535261
5.	5-A9	10.147	ARM, WSW (W/NOZZLES)	97-02	Y	RH	10424237
6.	5-A9	10.147	ARM, WSW (W/NOZZLE)	97-02	Y	LH	10424238
7.	5-N21	12.800	RETAINER, AIR INL SCRN (10.154)	97-02	Y	4	21075686
8.	5-N21	12.800	SCREEN, AIR INL (#86) (W/SEAL & FRM)	97	Y	1	10247327
	5-N21	12.800	SCREEN, AIR INL (#86)	97-02	Y	1	10446063
9.	5-N21	12.804	SEAL, PLNM PNL (4 1/4"X7 1/2") (TRIM AS REQ'D) (15.492)	97-02	Y	1	11515174
10.	5-A10	10.155	HOSE, WSWA NOZ (#91)	97-02	Y	1	22154854
11.		8.900	SCREW ASM, MACH HEX HD DOG PNT	97-02		AR	11516570
12.	5-A10	10.159	TRANSMISSION, WSW (PART OF 27) (AC-DELCO #22155675)	97-02	Y	1	22155675
13.	5-A9	10.150	MOTOR, WSW (PART OF 27) (W/O CRANK ARM) (AC-DELCO #12363318)	97-02	Y	1	12363318
14.	5-A9	10.152	SHIELD, WSW & WSWA MOT SPH (RUBBER SHIELD MUST BE TUCKED IN ORDER NOT TO HAVE VALLEYS WHICH WILL HOLD WATER) (PART OF 27) (AC-DELCO #12365358)	97-02	Y	1	12365358
15.	5-A9	10.150	CONNECTOR, MOT-WSW (BLACK) (5-WAY F)	97-02	Y	1	12129126
	5-A9	10.150	CONNECTOR, MOT-WSW (BLACK) (5-WAY F)	02	YY67 (M30, CJ2, N37) (EXC T89)	1	12129126
16.	5-A10	10.154	CAP, WSWA SOLV CNTNR (16.065) (AC-DELCO #12363335)	97-02	Y	1	12363335
17.		8.917	NUT, HEX W/CON WA 6X1X5.5 16-OD ZP 9 (WSWA SOLV CNTNR)	97-02		2	11517293
18.	5-A10	10.154	CONTAINER, WSWA SOLV	97-02	Y	1	22155677
19.		8.921	NUT, PUSH-ON, M6X1, SPR STL, STYLE 1, POR (WSWA SOLV CNTNR)	97-02		2	14093869
20.	5-A10	10.154	STUD, WSWA SOLV CNTNR (M6 X 1 X 24) (1.271)	97-02	Y	2	10135646
21.	5-A10	10.154	CONNECTOR, SW-WSWA SOLV LVL (BLACK) (2-WAY F W/LEADS) (2.383) (AC-DELCO #PT169)	97-02	Y (JL4)	1	12101899
22.	5-A10	10.154	INDICATOR, WSWA SOLV LVL	97-02	Y	1	22110978
23.	5-A10	10.154	GROMMET, WSWA SOLV CNTNR (LVL IND) (SMALL)	97-02	Y	1	12363291

cardiagn.com

							1Y10-022
24.	5-A10	10.154	GROMMET, WSWA SOLV CNTNR (PUMP) (18.00 MM OD) (10.153) .	97-98	Y	1	22039457
	5-A10	10.154	GROMMET, WSWA SOLV CNTNR (PUMP) (AC-DELCO #22062337)	99-02	Y	1	22062337
25.	5-A10	10.153	PUMP, WSWA (FRONT) (AC-DELCO #22127653)	97-02	Y	1	22127653
26.	5-A10	10.153	CONNECTOR, MOT-WSWA PUMP (BLACK) (2-WAY F W/LEADS) (3.670) (AC-DELCO #PT374)	97-02	Y	1	12102747
	5-A10	10.153	CONNECTOR, MOT-WSWA PUMP (4-WAY F) (W/LEADS) (280 SERIES) (12.243) (AC-DELCO #PT548)	97	Y	1	12125636
27.		N.S.	MODULE, WSW SYS (CPS) (INCLS 12-14, 28, & MTG KIT)				
	5-A9	10.152	MOUNTING KIT, WSW MOT (PART OF MODULE)	97-02	Y	1	22155673
28.	5-A9	10.151	ARM, WSW MOT CRK (PART OF 27)	97-02	Y	1	12494833
29.	5-A10	10.159	SUPPORT, WSW TRANS (10.152)	97-02	Y	1	12463020
30.		8.900	SCREW ASM, MACH HEX HD DOG PNT (HOOD STOP)	97-02		AR	11516570

RPO DEFINITIONS
CJ2 – HVAC SYSTEM AIR CONDITIONER FRT, AUTO TEMP CONT, AUX TEMP CONT
JL4 – CONTROL ACTIVE BRAKE
M30 – TRANSMISSION,AUTOMATIC 4 SPEED,4L60E,ELECTRONIC
N37 – STEERING COLUMN,TILT AND TELESCOPING
T89 – LAMP,TAIL AND STOP(EXPORT)

cardiagn.com

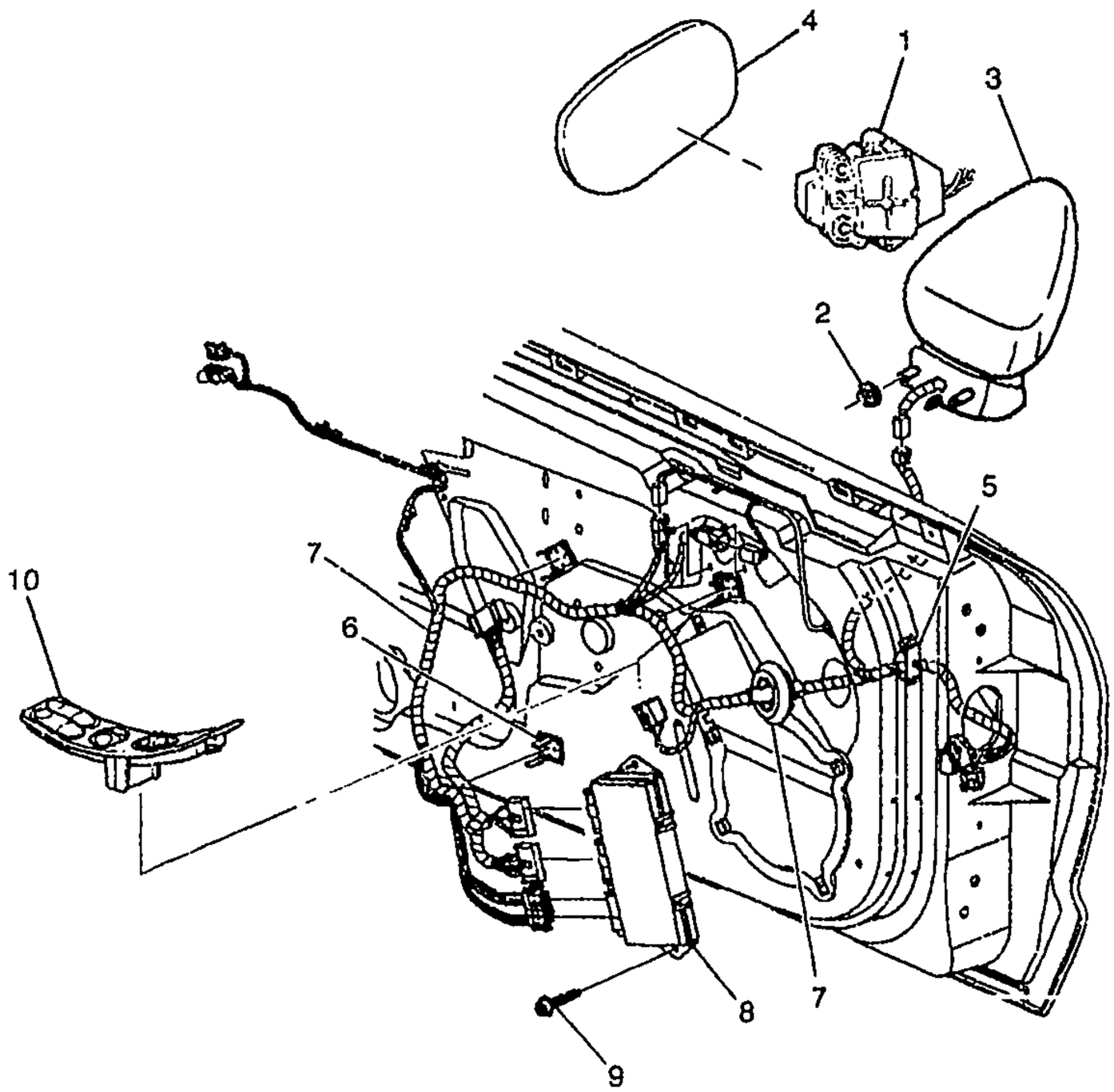

bc

1Y10-023

1997-2002 Y MIRRORS/REAR VIEW & CONTROLS (EXTERIOR)

1.	5-A11	10.185	MOTOR KIT, O/S RR VIEW MIR (ELEC/DEFOG) (10.186)	97-00	Y (DL8) (EXC AAB)	RH	12530710
	5-A11	10.185	MOTOR KIT, O/S RR VIEW MIR (ELEC/DEFOG) (10.186)	97-02	Y (DL8) (EXC AAB)	LH	12530711
	5-A11	10.185	MOTOR KIT, O/S RR VIEW MIR (ELEC/DEFOG/MEMORY) (10.186)	97-00	Y (AAB, DL8) (EXC Z5X)	RH	12530712
	5-A11	10.185	MOTOR KIT, O/S RR VIEW MIR (ELEC/DEFOG/MEMORY) (10.186)	97-02	Y (AAB, DL8)	LH	12530713
	5-A11	10.185	MOTOR KIT, O/S RR VIEW MIR (ELEC/DEFOG) (10.186)	01-02	Y (DD0, DL8) (EXC AAB)	RH	12530710
	5-A11	10.185	MOTOR KIT, O/S RR VIEW MIR (ELEC/DEFOG/MEMORY) (10.186)	01-02	Y (AAB, DD0, DL8)	RH	12530712
2.		8.917	NUT, HEX W/CON WA, 24 OD, M6X1X5.6, 9M, PZOR (O/S RR VIEW MIR)	97-02	.....	6	11514275

: 2001 GENERAL MOTORS SERVICE PARTS OPERATIONS-CHEVROLET-15Y

cardiagn.com

							1Y10–023
3.	5–A11	10.185	MIRROR, O/S RR VIEW (PAINT TO MATCH)	97–02	Y (DL8) (EXC AAB)	LH	10416055
	5–A11	10.185	MIRROR, O/S RR VIEW (PAINT TO MATCH)	97–00	Y (DL8) (EXC AAB)	RH	10416056
	5–A11	10.185	MIRROR, O/S RR VIEW (PAINT TO MATCH)	97–02	Y (DL8, AAB)	LH	10416057
	5–A11	10.185	MIRROR, O/S RR VIEW (PAINT TO MATCH) (ENGLISH LETTERING)	97–00	Y (AAB, DL8) (EXC Z5X)	RH	10416058
	5–A11	10.185	MIRROR, O/S RR VIEW (PAINT TO MATCH)	01–02	Y (DD0, DL8) (EXC AAB)	RH	10416056
	5–A11	10.185	MIRROR, O/S RR VIEW (PAINT TO MATCH) (ENGLISH LETTERING)	01–02	Y (AAB, DD0, DL8) (EXC Z5X)	RH	10416058
	5–A11	10.185	MIRROR, O/S RR VIEW (PAINT TO MATCH)	01–02	Y (AAB, DD0)	LH	10416321
	5–A11	10.185	MIRROR, O/S RR VIEW (PAINT TO MATCH)	01–02	Y (DD0) (EXC AAB)	LH	10416322
4.	5–A11	10.185	MIRROR KIT, O/S RR VIEW (W/CASE)	97–00	Y (DL8) (EXC Z5X)	RH	12530714
	5–A11	10.185	MIRROR KIT, O/S RR VIEW (W/CASE)	97–02	Y (DL8)	LH	12530715
	5–A11	10.185	MIRROR KIT, O/S RR VIEW (W/CASE)	01–02	Y (DD0)	LH	12455610
	5–A11	10.185	MIRROR KIT, O/S RR VIEW (W/CASE)	01–02	Y (DL8, DD0) (EXC Z5X)	RH	12530714
	5–A11	10.185	MIRROR KIT, O/S RR VIEW (W/CASE)	97–00	Y (AAB, DL8, Z5X) (EXPORT)	RH	12534830
	5–A11	10.185	MIRROR KIT, O/S RR VIEW (W/CASE)	01–02	Y (AAB, DD0, DL8, Z5X) (EXPORT)	RH	12534830
5.	5–N23	13.090	RETAINER, DR WRG HARN	97–02	Y	6	21020632
		8.967	RIVET, LG DOME HD TYPE P, BRK MANDREL BLIND, 1/8X.318, .375 OD, AL, ZP (DR WRG HARN RET)	97–02		3	9442269
6.		N.S.	CLIP (NS–PART OF DOOR HR PNL) (CEMENT–ON TYPE)			3	
7.	5–N23	13.090	HARNESS, DR LK & O/S RRVIEW MIR MEMORY INTERFACE MDL WRG	97–00	Y	LH	12163314
	5–N23	13.090	HARNESS, DR LK & O/S RRVIEW MIR MEMORY INTERFACE MDL WRG	97–99	Y	RH	12163315
	5–N23	13.090	HARNESS, DR LK & O/S RRVIEW MIR MEMORY INTERFACE MDL WRG	00–02	Y (T93)	RH	12163315
	5–N23	13.090	HARNESS, DR LK & O/S RRVIEW MIR MEMORY INTERFACE MDL WRG	01–02	Y (DL8)	LH	12163314
	5–N23	13.090	HARNESS, DR LK & O/S RRVIEW MIR MEMORY INTERFACE MDL WRG	01–02	Y (DD0)	LH	12189556
8.	5–A22	10.485	MODULE, FRT S/D CONT (DRVR) (S/D LOCAL INTERFACE)	97–99	Y	LH	9352881
	5–A22	10.485	MODULE, FRT S/D CONT (DRVR) (S/D LOCAL INTERFACE)	00–02	Y	LH	9389689
	5–A22	10.485	MODULE, FRT S/D CONT (PASS) (S/D LOCAL INTERFACE)	97–99	Y	RH	9352891

© 2001 GENERAL MOTORS SERVICE PARTS OPERATIONS–CHEVROLET–15Y

cardiagn.com

							1Y10–023
	5–A22	10.485	MODULE, FRT S/D CONT (PASS) (S/D LOCAL INTERFACE)	00–02	Y	RH	10435192
9.	5–A22	10.485	BOLT, FRT S/D CONT MDL (10.268)	97–02	Y	4	10281420
10.	5–B4	10.777	SWITCH, SI WDO	97–02	Y	RH	12135165
	5–B4	10.777	SWITCH, SI WDO (DRIVER (W/POWER MIRRORS W/MEMORY W/DOOR LOCKS)) ..	01–02	Y (AAB)	LH	12135166
	5–B4	10.777	SWITCH, SI WDO (DRIVER) (W/POWER MIRRORS W/MEMORY W/DOOR LOCKS)) (& MIRRORS & DR LK)	99–02	Y (EXC AAB)	LH	12135167
	5–B4	10.777	SWITCH, SI WDO (SNAP FIT ASM) (DRIVER) (W/POWER MIRRORS W/MEMORY W/DOOR LOCKS))	97	Y07 (AAB)	LH	12135166
	5–B4	10.777	SWITCH, SI WDO (SNAP FIT ASM) (DRIVER) (W/POWER MIRRORS W/MEMORY W/DOOR LOCKS)) (& MIRRORS & DR LK) .	97	Y07 (EXC AAB)	LH	12135167
	5–B4	10.777	SWITCH, SI WDO (SNAP FIT ASM) (DRIVER) (W/POWER MIRRORS W/MEMORY W/DOOR LOCKS))	98–00	Y07–67 (AAB)	LH	12135166
	5–B4	10.777	SWITCH, SI WDO (SNAP FIT ASM) (DRIVER) (W/POWER MIRRORS W/MEMORY W/DOOR LOCKS)) (& MIRRORS & DR LK) .	98	Y07–67 (EXC AAB)	LH	12135167
	5–A22	10.485	BULB, DR LK SW (W/O BOOT) (9.276) (AC–DELCO #16057072)	97–02	Y	1	16057072
	5–A12	10.186	BULB, O/S RR VIEW MIR R/CONT SW (9.276) (AC–DELCO #16057072)	01–02	Y	LH	16057072
	5–A12	10.186	BULB, O/S RR VIEW MIR R/CONT SW (W/MEMORY, W/O BOOT) (9.276) (AC–DELCO #16057072)	97	Y07	LH	16057072
	5–A12	10.186	BULB, O/S RR VIEW MIR R/CONT SW (W/MEMORY, W/O BOOT) (9.276) (AC–DELCO #16057072)	98–00	Y07–67	LH	16057072
	5–B4	10.777	CONNECTOR, SW–SI WDO & M/FUNC (BLACK) (7–WAY F, W/LEADS) (2.535) (AC–DELCO #PT406)	97–02	Y	1	12102778
	5–B4	10.777	BULB, SI WDO SW (W/O BOOT) (9.276) (AC–DELCO #16057072)	97–02	Y (EXPORT)	2	16057072

RPO DEFINITIONS
AAB – MEMORY DRIVER CONVENIENCE PACKAGE
DD0 – MIRROR,O/S,R AND L REM CTL,ELEC,DEFOG,LT SENSITIVE
DL8 – MIRROR,OUTSIDE,RH AND LH REMOTE CONTROL,ELECTRIC,DEFOG
T93 – LAMP,TAIL AND STOP(SPECIAL)
Z5X – MIRROR PROVISIONS ARABIC LANGUAGE(EXPORT)

cardiagn.com

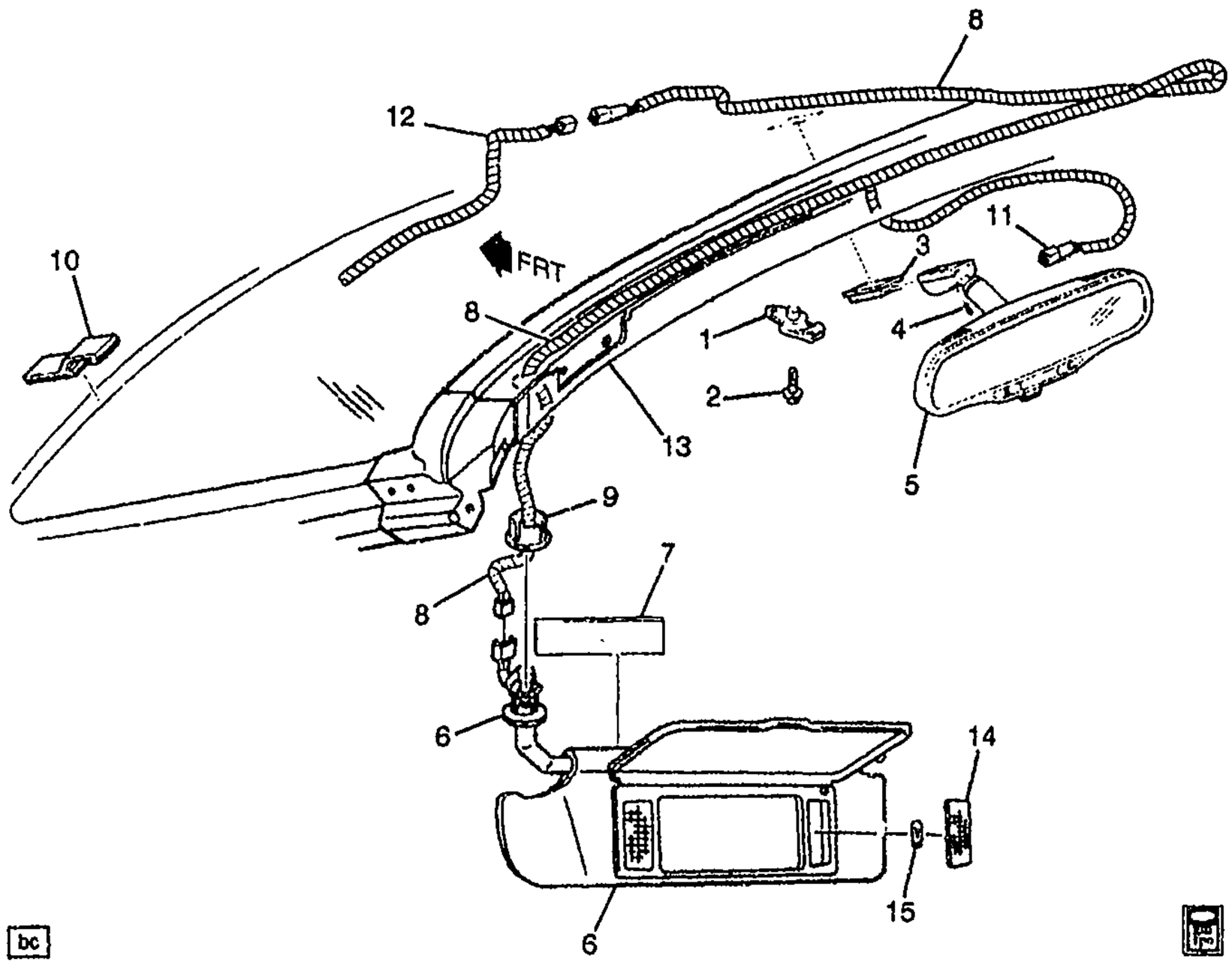

bc

1Y10-024

1997 Y07 SUNSHADE ASM
1998-2002 Y07-67 SUNSHADE ASM

1.	5-A15	10.219	RETAINER, S/S	97-02	Y	2	10411051
2.		8.977	SCREW, HIGH-HEX WA HD TAP/B 4.200X 1.41X 30.00 PO (S/S RET) (8.900)	97-02		2	11509541
3.	5-A12	10.187	BRACKET, I/S RR VIEW MIR	97-98	Y	1	25653132
	5-A12	10.187	BRACKET, I/S RR VIEW MIR	99-00	Y (UV6)	1	20626174
	5-A12	10.187	BRACKET, I/S RR VIEW MIR	99-00	Y (EXC UV6)	1	25653132
	5-A12	10.187	BRACKET, I/S RR VIEW MIR	01-02	Y07-67 (UV6)	1	20626174
	5-A12	10.187	BRACKET, I/S RR VIEW MIR	01-02	Y07-67 (EXC UV6)	1	25653132
	5-A12	10.187	BRACKET, I/S RR VIEW MIR	02	YY67 (UV6)	1	25653132
4.		N.S.	SCREW, SPRING TOGGLE (PART OF MIRROR ASM)				
5.	5-A11	10.185	MIRROR, I/S RR VIEW (BLACK) (F-CAR DESIGN) (#84)	97-00	Y	1	10295109
	5-A11	10.185	MIRROR, I/S RR VIEW (BLACK) (F-CAR DESIGN) (#84)	01-02	Y (EXC DD8)	1	10295109
	5-A11	10.185	MIRROR, I/S RR VIEW	01-02	Y (DD8)	1	10433960
		8.800	ADHESIVE KIT, GLASS (URETHANE) (W/S)	97-02		1	12346392
6.	5-A13	10.203	SUNSHADE, (BLACK)	97	Y07	LH	10426849
	5-A13	10.203	SUNSHADE, (BLACK)	97	Y07	RH	10426850

© 2001 GENERAL MOTORS SERVICE PARTS OPERATIONS-CHEVROLET-15Y

cardiagn.com

								1Y10–024
	5–A13	10.203	SUNSHADE, (BLACK) (W/2.5" EXPOSED RETAINER PIN) (FOR 2ND DES SEE 10426849)		98	Y (EXC Z49) (1ST DES)	LH	10426849
	5–A13	10.203	SUNSHADE, (BLACK) (W/1" EXPOSED RETAINER PIN) (FOR 1ST DES SEE 10407144)		98	Y (EXC Z49) (2ND DES)	LH	10426849
	5–A13	10.203	SUNSHADE, (BLACK) (W/2.5" EXPOSED RETAINER PIN) (FOR 2ND DES SEE 10426850)		98	Y (EXC Z49) (1ST DES)	RH	10426850
	5–A13	10.203	SUNSHADE, (BLACK) (W/1" EXPOSED RETAINER PIN) (FOR 1ST DES SEE 10407145)		98	Y (EXC Z49) (2ND DES)	RH	10426850
	5–A13	10.203	SUNSHADE, (BLACK) (W/2.5" EXPOSED RETAINER PIN) (FOR 2ND DES SEE 10426849)		99	Y07–67 (EXC Z49) (1ST DES)	LH	10426849
	5–A13	10.203	SUNSHADE, (BLACK) (W/1" EXPOSED RETAINER PIN) (FOR 1ST DES SEE 10407144)		99	Y07–67 (EXC Z49) (2ND DES)	LH	10426849
	5–A13	10.203	SUNSHADE, (BLACK)		99	Y07–67 (EXC Z49)	RH	10426850
	5–A13	10.203	SUNSHADE, ...	00–02		Y07–67 (EXC C88, Z49)	RH	10442033
	5–A13	10.203	SUNSHADE, ...	00–02		Y07–67 (EXC C88, Z49)	LH	10442034
	5–A13	10.203	SUNSHADE, (1" EXPOSED RETAINER PIN) (BLACK) (EARLY 2000 VEHICLES BUILT W/O MANUAL PSIR SUPPRESSION SWITCH IN GLOVE BOX, FOR 2ND DESIGN SEE 10442035)		00	Y07–67 (Z49) (1ST DES)	LH	10426489
	5–A13	10.203	SUNSHADE, (1" EXPOSED RETAINER PIN) (BLACK) (EARLY 2000 VEHICLES BUILT W/O MANUAL PSIR SUPPRESSION SWITCH IN GLOVE BOX, FOR 2ND DESIGN SEE 10442035)		00	Y07–67 (Z49) (1ST DES)	RH	10426490
	5–A13	10.203	SUNSHADE, (1" EXPOSED RETAINER PIN) (LATER 2000 VEHICLES W/MANUAL PSIR SUPPRESSION SWITCH IN GLOVEBOX, FOR 1ST DESIGN SEE 10426490)		00	Y07–67 (Z49) (2ND DES)	RH	10442035
	5–A13	10.203	SUNSHADE, (1" EXPOSED RETAINER PIN) (LATER 2000 VEHICLES W/MANUAL PSIR SUPPRESSION SWITCH IN GLOVEBOX, FOR 1ST DESIGN SEE 10426490)		00	Y07–67 (Z49) (2ND DES)	LH	10442036
	5–A13	10.203	SUNSHADE, (1" EXPOSED RETAINER PIN)	01–02		Y (Z49)	RH	10442035
	5–A13	10.203	SUNSHADE, (1" EXPOSED RETAINER PIN)	01–02		Y (Z49)	LH	10442036
	5–A13	10.203	SUNSHADE, (BLACK)	00–02		Y07–67 (C88) (EXPORT)	LH	10426849
	5–A13	10.203	SUNSHADE, (BLACK)	00–02		Y07–67 (C88) (EXPORT)	RH	10426850
7.	5–N9	8.808	LABEL, INFL RST SYS CAUTION (140.0X40.0)		97	Y	2	15001737

cardiagn.com

							1Y10-024
	5-N9	8.808	LABEL, INFL RST SYS CAUTION (130.0X65.0)	98-00	Y07-67 (Z49)	2	10408963
	5-N9	8.808	LABEL, INFL RST SYS CAUTION (140.0X40.0)	98-99	Y07-67 (EXC Z49)	2	15001737
	5-N9	8.808	LABEL, INFL RST SYS CAUTION	00-02	Y (EXC C88, Z49)	2	15002610
	5-N9	8.808	LABEL, INFL RST SYS CAUTION (140.0X40.0)	00-02	Y07-67 (C88) (EXPORT)	2	15001737
	5-N9	8.808	LABEL, INFL RST SYS CAUTION (ARABIC)	01-02	Y07-67 (VBX) (EXPORT)	2	15749556
8.		N.S.	HARNESS, S/S ILLUM MIR WRG		.....		
	5-N25	13.100	CONNECTOR, INLINE-TO S/S MIR LP (BLACK) (2-WAY M W/LEADS) (2.535) (AC-DELCO #PT103)	97-02	Y	2	12085481
	5-N25	13.100	CONNECTOR, INLINE-TO S/S MIR LP (GRAY) (8-WAY F) (W/LEADS) (2.535) (AC-DELCO #PT214)	99	Y	1	12101822
	5-N25	13.100	CONNECTOR, INLINE-TO S/S MIR LP (8-WAY M) (W/LEADS) (2.535) (AC-DELCO #PT219) ...	99	Y07-67	1	12101827
	5-N25	13.100	CONNECTOR, INLINE-TO S/S MIR LP (GRAY) (8-WAY F) (W/LEADS) (2.535) (AC-DELCO #PT214)	01-02	Y	1	12101822
9.	5-A15	10.219	BEZEL, S/S ROD (BLACK)	97-02	Y	LH	10431402
	5-A15	10.219	BEZEL, S/S ROD (BLACK)	97-02	Y	RH	10431403
10.		N.S.	SUPPORT, W/S		.....	2	
11.	5-A11	10.185	CONNECTOR, INLINE-TO I/S RR VIEW MIR (4-WAY F W/LEADS) (2.535) (AC-DELCO #PT382)	97-02	Y (EXC DD8)	1	12102900
	5-A11	10.185	CONNECTOR, INLINE-TO I/S RR VIEW MIR (7-WAY F) (W/LEADS) (AC-DELCO #PT1242)	99	Y07-67	1	15306078
	5-A11	10.185	CONNECTOR, INLINE-TO I/S RR VIEW MIR (7-WAY F) (W/LEADS) (AC-DELCO #PT1242)	01-02	Y (DD8)	1	15306078
	5-A11	10.185	CONNECTOR, INLINE-TO I/S RR VIEW MIR (8-WAY M) (W/LEADS) (2.535) (AC-DELCO #PT219)	01-02	YY67	1	12101827
12.	5-M10	2.480	HARNESS, I/P WRG	97	Y (M30, CJ2) (EXC T89, Z49)	1	12189868
	5-M10	2.480	HARNESS, I/P WRG	97	Y (M30, C60) (EXC T89, Z49)	1	12189869
	5-M10	2.480	HARNESS, I/P WRG	97	Y (MM6, CJ2) (EXC T89, Z49)	1	12189870
	5-M10	2.480	HARNESS, I/P WRG	97	Y (MM6, C60) (EXC T89, Z49)	1	12189871
	5-M10	2.480	HARNESS, I/P WRG	97	Y (M30, CJ2, Z49) (EXC T69, T93)	1	12189874
	5-M10	2.480	HARNESS, I/P WRG	97	Y (M30, C60, Z49) (EXC T89, T93)	1	12189875
	5-M10	2.480	HARNESS, I/P WRG	97	Y (MM6, CJ2, Z49) (EXC T89, T93)	1	12189876

cardiagn.com

						1Y10–024
5–M10	2.480	HARNESS, I/P WRG	97	Y (MM6, C60, Z49) (EXC T89, T93)	1	12189877
5–M10	2.480	HARNESS, I/P WRG	98	Y07 (M30, CJ2) (EXC JAG, T89, Z49)	1	12189813
5–M10	2.480	HARNESS, I/P WRG	98	Y07 (M30, C60) (EXC JAG, T89, Z49)	1	12189814
5–M10	2.480	HARNESS, I/P WRG	98	Y07 (MM6, CJ2) (EXC JAG, T89, Z49)	1	12189815
5–M10	2.480	HARNESS, I/P WRG	98	Y (MM6, C60) (EXC JAG, T89, Z49)	1	12189816
5–M10	2.480	HARNESS, I/P WRG	98	Y07 (M30, CJ2, Z49) (EXC JAG, T89, T93) ...	1	12189819
5–M10	2.480	HARNESS, I/P WRG	98	Y07 (M30, C60, Z49) (EXC JAG, T89, T93) ...	1	12189820
5–M10	2.480	HARNESS, I/P WRG	98	Y07 (MM6, CJ2, Z49) (EXC JAG, T89, T93) ...	1	12189821
5–M10	2.480	HARNESS, I/P WRG	98	Y07 (MM6, C60, Z49) (EXC JAG, T89, T93) ...	1	12189822
5–M10	2.480	HARNESS, I/P WRG	98	Y67 (M30, CJ2) (EXC JAG, T89, Z49)	1	12189801
5–M10	2.480	HARNESS, I/P WRG	98	Y67 (MM6, CJ2) (EXC JAG, T89, Z49)	1	12189802
5–M10	2.480	HARNESS, I/P WRG	98	Y67 (M30, C60) (EXC JAG, T89, Z49)	1	12189803
5–M10	2.480	HARNESS, I/P WRG	98	Y67 (MM6, C60) (EXC JAG, T89, Z49)	1	12189804
5–M10	2.480	HARNESS, I/P WRG	98	Y67 (M30, CJ2, Z49) (EXC JAG, T89, T93) ...	1	12189805
5–M10	2.480	HARNESS, I/P WRG	98	Y67 (M30, C60, Z49) (EXC JAG, T89, T93) ...	1	12189806
5–M10	2.480	HARNESS, I/P WRG	98	Y67 (MM6, CJ2, Z49) (EXC JAG, T89, T93) ...	1	12189807
5–M10	2.480	HARNESS, I/P WRG	98	Y67 (MM6, C60, Z49) (EXC JAG, T89, T93) ...	1	12189808
5–M10	2.480	HARNESS, I/P WRG (MAY REQUIRE 12450028 I/P COMPT LP & 12102616 PWR RCPT CONN)	99	Y07 (M30, CJ2, JL4) (EXC N37, T89)	1	12190424
5–M10	2.480	HARNESS, I/P WRG (MAY REQUIRE 12450028 I/P COMPT LP & 12102616 PWR RCPT CONN)	99–00	Y07 (M30, CJ2, JL4, N37) (EXC T89)	1	12190424
5–M10	2.480	HARNESS, I/P WRG (MAY REQUIRE 12450028 I/P COMPT LP & 12102616 PWR RCPT CONN)	99–00	Y07 (M30, C60, JL4) (EXC N37, T89)	1	12190427
5–M10	2.480	HARNESS, I/P WRG (MAY REQUIRE 12450028 I/P COMPT LP & 12102616 PWR RCPT CONN)	99	Y07 (MM6, CJ2, JL4, N37) (EXC T89)	1	12190429
5–M10	2.480	HARNESS, I/P WRG (MAY REQUIRE 12450028 I/P COMPT LP & 12102616 PWR RCPT CONN)	99–00	Y07 (MM6, C60, JL4) (EXC N37, T89)	1	12190432
5–M10	2.480	HARNESS, I/P WRG (MAY REQUIRE 12450028 I/P COMPT LP & 12102616 PWR RCPT CONN)	99–00	Y07 (M30, CJ2, N37) (EXC JL4, T89)	1	12190434

cardiagn.com

						1Y10-024
5-M10	2.480	HARNESS, I/P WRG (MAY REQUIRE 12450028 I/P COMPT LP & 12102616 PWR RCPT CONN)	99-00	Y07 (M30, C60) (EXC JL4, N37, T89)	1	12190437
5-M10	2.480	HARNESS, I/P WRG (MAY REQUIRE 12450028 I/P COMPT LP & 12102616 PWR RCPT CONN)	99-00	Y07 (MM6, CJ2, N37) (EXC JL4, T89)	1	12190439
5-M10	2.480	HARNESS, I/P WRG (MAY REQUIRE 12450028 I/P COMPT LP & 12102616 PWR RCPT CONN)	99-00	Y07 (MM6, C60) (EXC JL4, N37, T89)	1	12190442
5-M10	2.480	HARNESS, I/P WRG (MAY REQUIRE 12450028 I/P COMPT LP & 12102616 PWR RCPT CONN)	99-00	Y67 (M30, CJ2, N37) (EXC T89)	1	12190444
5-M10	2.480	HARNESS, I/P WRG (MAY REQUIRE 12450028 I/P COMPT LP & 12102616 PWR RCPT CONN)	99-00	Y67 (M30, C60) (EXC N37, T89)	1	12190447
5-M10	2.480	HARNESS, I/P WRG (MAY REQUIRE 12450028 I/P COMPT LP & 12102616 PWR RCPT CONN)	99-00	Y67 (MM6, CJ2, N37) (EXC T89)	1	12190449
5-M10	2.480	HARNESS, I/P WRG (MAY REQUIRE 12450028 I/P COMPT LP & 12102616 PWR RCPT CONN)	99-00	Y67 (MM6, C60) (EXC N37, T89)	1	12190452
5-M10	2.480	HARNESS, I/P WRG (INCLUDES PROVISIONS FOR MAN. SUPPRESSION SYS. INCLUDES HARN. INLINE P/DOOR) ..	00	Y07 (M30, CJ2, JL4, N37) (EXC T89)	1	10442559
5-M10	2.480	HARNESS, I/P WRG (INCLUDES PROVISIONS FOR MAN. SUPPRESSION SYS. INCLUDES HARN. INLINE P/DOOR) ..	00	Y07 (M30, C60, JL4) (EXC N37, T89)	1	10442562
5-M10	2.480	HARNESS, I/P WRG (INCLUDES PROVISIONS FOR MAN. SUPPRESSION SYS. INCLUDES HARN. INLINE P/DOOR) ..	00	Y07 (MM6, CJ2, JL4) (EXC T89)	1	10442563
5-M10	2.480	HARNESS, I/P WRG (INCLUDES PROVISIONS FOR MAN. SUPPRESSION SYS. INCLUDES HARN.INLINE P/DOOR) ..	00	Y07 (MM6, C60, JL4) (EXC N37)	1	10442566
5-M10	2.480	HARNESS, I/P WRG (INCLUDES PROVISIONS FOR MAN. SUPPRESSION SYS. INCLUDES HARN.INLINE P/DOOR)	00	Y07 (M30, CJ2) (EXC JL4, T89)	1	10442567
5-M10	2.480	HARNESS, I/P WRG (INCLUDES PROVISIONS FOR MAN. SUPPRESSION SYS. INCLUDES HARN.INLINE P/DOOR)	00	Y07 (M30, C60) (EXC JL4, N37)	1	10442570
5-M10	2.480	HARNESS, I/P WRG (INCLUDES PROVISIONS FOR MAN. SUPPRESSION SYS. INCLUDES HARN.INLINE P/DOOR)	00	Y07 (MM6, CJ2) (EXC JL4, T89)	1	10442571

cardiagn.com

						1Y10-024
5-M10	2.480	HARNESS, I/P WRG (INCLUDES PROVISIONS FOR MAN. SUPPRESSION SYS. INCLUDES HARN.INLINE P/DOOR)	00	Y07 (MM6, C60) (EXC JL4, N37)	1	10442574
5-M10	2.480	HARNESS, I/P WRG (INCLUDES PROVISIONS FOR MAN. SUPPRESSION SYS. INCLUDES HARN.INLINE P/DOOR)	00	Y67 (M30, CJ2) (EXC T89)	1	10442575
5-M10	2.480	HARNESS, I/P WRG (INCLUDES PROVISIONS FOR MAN. SUPPRESSION SYS. INCLUDES HARN.INLINE P/DOOR)	00	Y67 (M30, C60) (EXC N37)	1	10442578
5-M10	2.480	HARNESS, I/P WRG (INCLUDES PROVISIONS FOR MAN. SUPPRESSION SYS. INCLUDES HARN.INLINE P/DOOR)	00	Y67 (MM6, C60) (EXC N37)	1	10442582
5-M10	2.480	HARNESS, I/P WRG	00	YY07 (MM6, CJ2) (EXC JL4, N37, T89)	1	10442572
5-M10	2.480	HARNESS, I/P WRG	01	Y07 (M30, CJ2, JL4) (EXC T89)	1	10310779
5-M10	2.480	HARNESS, I/P WRG (2ND DSN USED ON/AFTER VIN #15107689, (1ST DSN 10448088))	01	Y07 (M30, C60, JL4) (EXC N37) (2ND DES) .	1	10310780
5-M10	2.480	HARNESS, I/P WRG (2ND DSN USED ON/AFTER VIN #15107689, (1ST DSN 10448089))	01	Y07 (MM6, CJ2, JL4) (EXC T89) (2ND DES) ..	1	10310781
5-M10	2.480	HARNESS, I/P WRG (2ND DSN USED ON/AFTER VIN #15107689, (1ST DSN 10448090))	01	Y07 (MM6, C60, JL4) (EXC N37) (2ND DES) .	1	10310782
5-M10	2.480	HARNESS, I/P WRG (1ST DSN USED B/4 VIN #15107689, (2ND DSN 10310779))	01	Y07 (M30, CJ2, JL4) (EXC N37, T89) (1ST DES)	1	10448087
5-M10	2.480	HARNESS, I/P WRG (1ST DSN USED B/4 VIN #15107689, (2ND DSN 10310780))	01	Y07 (M30, C60, JL4) (EXC N37) (1ST DES) ..	1	10448088
5-M10	2.480	HARNESS, I/P WRG (1ST DSN USED B/4 VIN #15107689, (2ND DSN 10310781))	01	Y07 (MM6, CJ2, JL4, N37) (EXC T89) (1ST DES)	1	10448089
5-M10	2.480	HARNESS, I/P WRG (1ST DSN USED B/4 VIN #15107689, (2ND DSN 10310782))	01	Y07 (MM6, C60, JL4) (EXC N37) (1ST DES) ..	1	10448090
5-M10	2.480	HARNESS, I/P WRG (2ND DSN USED ON/AFTER VIN #15107689, (1ST DSN 10448103))	01	Y67 (M30, CJ2) (EXC T89) (2ND DES)	1	10310787
5-M10	2.480	HARNESS, I/P WRG (2ND DSN USED ON/AFTER VIN #15107689, (1ST DSN 10448104))	01	Y67 (M30, C60) (EXC N37) (2ND DES)	1	10310788
5-M10	2.480	HARNESS, I/P WRG (2ND DSN USED ON/AFTER VIN #15107689, (1ST DSN 10448105))	01	Y67 (MM6, CJ2) (EXC T89) (2ND DES)	1	10310789

cardiagn.com

						1Y10-024
5-M10	2.480	HARNESS, I/P WRG (1ST DSN USED B/4 VIN #15107689, (2ND DSN 10310787))	01	Y67 (M30, CJ2, N37) (EXC T89) (1ST DES) ..	1	10448103
5-M10	2.480	HARNESS, I/P WRG (1ST DSN USED B/4 VIN #15107689, (2ND DSN 10310788))	01	Y67 (M30, C60) (EXC N37) (1ST DES)	1	10448104
5-M10	2.480	HARNESS, I/P WRG (1ST DSN USED B/4 VIN #15107689, (2ND DSN 10310789))	01	Y67 (MM6, CJ2, N37) (EXC T89) (1ST DES) ..	1	10448105
5-M10	2.480	HARNESS, I/P WRG (1ST DSN USED B/4 VIN #15107689, (2ND DSN 10310790))	01	Y67 (MM6, C60) (EXC N37) (1ST DES)	1	10448106
5-M10	2.480	HARNESS, I/P WRG (2ND DSN USED ON/AFTER VIN #15107689, (1ST DSN 10448106))	01	YY67 (MM6, C60) (EXC N37) (2ND DES)	1	10310790
5-M10	2.480	HARNESS, I/P WRG	02	Y07 (MM6, CJ2) (EXC T89)	1	10310781
5-M10	2.480	HARNESS, I/P WRG	02	Y07 (MM6, C60) (EXC N37)	1	10310782
5-M10	2.480	HARNESS, I/P WRG	02	Y67 (M30, CJ2) (EXC T89)	1	10310787
5-M10	2.480	HARNESS, I/P WRG	02	Y67 (MM6, CJ2) (EXC T89)	1	10310789
5-M10	2.480	HARNESS, I/P WRG	02	YY07 (M30, CJ2) (EXC T89)	1	10310779
5-M10	2.480	HARNESS, I/P WRG	02	YY07 (M30, C60) (EXC N37)	1	10310780
5-M10	2.480	HARNESS, I/P WRG	02	YY67 (M30, C60) (EXC N37)	1	10310788
5-M10	2.480	HARNESS, I/P WRG	02	YY67 (MM6, C60) (EXC N37)	1	10310790
5-M10	2.480	HARNESS, I/P WRG (MUST BE USED W/BODY CONT MDL LABELED 9359821 FOR 1998) ...	98	Y07 (M30, CJ2, JL4, JAG) (EXC T89, Z49) ..	1	12190400
5-M10	2.480	HARNESS, I/P WRG (MUST BE USED W/BODY CONT MDL LABELED 9359821 FOR 1998) ...	98	Y07 (M30, C60, JL4, JAG) (EXC T89, Z49) ..	1	12190401
5-M10	2.480	HARNESS, I/P WRG (MUST BE USED W/BODY CONT MDL LABELED 9359821 FOR 1998) ...	98	Y07 (MM6, CJ2, JL4, JAG) (EXC T89, Z49) ..	1	12190402
5-M10	2.480	HARNESS, I/P WRG (MUST BE USED W/BODY CONT MDL LABELED 9359821 FOR 1998) ...	98	Y07 (MM6, C60, JL4, JAG) (EXC T89, Z49) ..	1	12190403
5-M10	2.480	HARNESS, I/P WRG (MUST BE USED W/BODY CONT MDL LABELED 9359821 FOR 1998) ...	98	Y07 (M30, CJ2, JAG, JL4, Z49) (EXC T89, T93)	1	12190406
5-M10	2.480	HARNESS, I/P WRG (MUST BE USED W/BODY CONT MDL LABELED 9359821 FOR 1998) ...	98	Y07 (M30, C60, JAG, JL4, Z49) (EXC T89, T93)	1	12190407
5-M10	2.480	HARNESS I/P WRG (MUST BE USED W/BODY CONT MDL LABELED 9359821 FOR 1998) ...	98	Y07 (MM6, CJ2, JAG, JL4, Z49) (EXC T89, T93)	1	12190408
5-M10	2.480	HARNESS, I/P WRG (MUST BE USED W/BODY CONT MDL LABELED 9359821 FOR 1998) ...	98	Y07 (MM6, C60, JAG, JL4, Z49) (EXC T89, T93)	1	12190409

cardiagn.com

						1Y10–024
5–M10	2.480	HARNESS, I/P WRG (MUST BE USED W/BODY CONT MDL LABELED 9359821 FOR 1998) ...	98	Y07 (M30, CJ2, JAG) (EXC JL4, T89, Z49) ...	1	12190412
5–M10	2.480	HARNESS, I/P WRG (MUST BE USED W/BODY CONT MDL LABELED 9359821 FOR 1998) ...	98	Y07 (M30, C60, JAG) (EXC JL4, T89, Z49) ...	1	12190413
5–M10	2.480	HARNESS, I/P WRG (MUST BE USED W/BODY CONT MDL LABELED 9359821 FOR 1998) ...	98	Y07 (MM6, CJ2, JAG) (EXC JL4, T89, Z49) ...	1	12190414
5–M10	2.480	HARNESS, I/P WRG (MUST BE USED W/BODY CONT MDL LABELED 9359821 FOR 1998) ...	98	Y07 (MM6, C60, JAG) (EXC JL4, T89, Z49) ...	1	12190415
5–M10	2.480	HARNESS, I/P WRG (MUST BE USED W/BODY CONT MDL LABELED 9359821 FOR 1998) ...	98	Y07 (M30, CJ2, JAG, Z49) (EXC JL4, T89, T93)	1	12190418
5–M10	2.480	HARNESS, I/P WRG (MUST BE USED W/BODY CONT MDL LABELED 9359821 FOR 1998) ...	98	Y07 (M30, C60, JAG, Z49) (EXC JL4, T89, T93)	1	12190419
5–M10	2.480	HARNESS, I/P WRG (MUST BE USED W/BODY CONT MDL LABELED 9359821 FOR 1998) ...	98	Y07 (MM6, CJ2, JAG, Z49) (EXC JL4, T89, T93)	1	12190420
5–M10	2.480	HARNESS, I/P WRG (MUST BE USED W/BODY CONT MDL LABELED 9359821 FOR 1998) ...	98	Y07 (MM6, C60, JAG, Z49) (EXC JL4, T89, T93)	1	12190421
5–M10	2.480	HARNESS, I/P WRG (MUST BE USED W/BODY CONT MDL LABELED 9359821 FOR 1998) ...	98	Y67 (M30, CJ2, JAG) (EXC T89, Z49)	1	12189980
5–M10	2.480	HARNESS, I/P WRG (MUST BE USED W/BODY CONT MDL LABELED 9359821 FOR 1998) ...	98	Y67 (MM6, CJ2, JAG) (EXC T89, Z49)	1	12189981
5–M10	2.480	HARNESS, I/P WRG (MUST BE USED W/BODY CONT MDL LABELED 9359821 FOR 1998) ...	98	Y67 (M30, C60, JAG) (EXC T89, Z49)	1	12189982
5–M10	2.480	HARNESS, I/P WRG (MUST BE USED W/BODY CONT MDL LABELED 9359821 FOR 1998) ...	98	Y67 (MM6, C60, JAG) (EXC T89, Z49)	1	12189983
5–M10	2.480	HARNESS, I/P WRG (MUST BE USED W/BODY CONT MDL LABELED 9359821 FOR 1998) ...	98	Y67 (M30, CJ2, Z49, JAG) (EXC T89)	1	12189984
5–M10	2.480	HARNESS, I/P WRG (MUST BE USED W/BODY CONT MDL LABELED 9359821 FOR 1998) ...	98	Y67 (M30, C60, Z49, JAG) (EXC T89)	1	12189985
5–M10	2.480	HARNESS, I/P WRG (MUST BE USED W/BODY CONT MDL LABELED 9359821 FOR 1998) ...	98	Y67 (MM6, CJ2, JAG, Z49) (EXC T89)	1	12189986
5–M10	2.480	HARNESS, I/P WRG (MUST BE USED W/BODY CONT MDL LABELED 9359821 FOR 1998) ...	98	Y67 (MM6, C60, Z49, JAG) (EXC T89)	1	12189987
5–M10	2.480	HARNESS, I/P WRG	97	Y (M30, CJ2, T89) (EXC T93, Z49) (EXPORT) ...	1	12189872
5–M10	2.480	HARNESS, I/P WRG	97	Y (MM6, CJ2, T89) (EXC T93, Z49) (EXPORT)	1	12189873
5–M10	2.480	HARNESS, I/P WRG	97	Y (M30, C60, T89) (EXC T93, Z49) (EXPORT) ...	1	12189878
5–M10	2.480	HARNESS, I/P WRG	98	Y07 (M30, CJ2, T89) (EXC JAG, T93, Z49) (EXPORT)	1	12189817

cardiagn.com

						1Y10–024
5–M10	2.480	HARNESS, I/P WRG	98	Y07 (MM6, CJ2, T89) (EXC JAG, T93, Z49) (EXPORT)	1	12189818
5–M10	2.480	HARNESS, I/P WRG	98	Y07 (M30, C60, T89) (EXC JAG, T93, Z49) (EXPORT)	1	12189823
5–M10	2.480	HARNESS, I/P WRG	98	Y07 (MM6, C60, T89) (EXC JAG, T93, Z49) (EXPORT)	1	12189824
5–M10	2.480	HARNESS, I/P WRG	98	Y67 (M30, CJ2, T89) (EXC JAG, T93, Z49) (EXPORT)	1	12189809
5–M10	2.480	HARNESS, I/P WRG	98	Y67 (M30, C60, T89) (EXC JAG, T93, Z49) (EXPORT)	1	12189810
5–M10	2.480	HARNESS, I/P WRG	98	Y67 (MM6, CJ2, T89) (EXC JAG, T93, Z49) (EXPORT)	1	12189811
5–M10	2.480	HARNESS, I/P WRG	98	Y67 (MM6, C60, T89) (EXC JAG, T93, Z49) (EXPORT)	1	12189812
5–M10	2.480	HARNESS, I/P WRG (MAY REQUIRE 12450028 I/P COMPT LP & 12102616 PWR RCPT CONN)	99–00	Y07 (M30, CJ2, JL4, T89) (EXPORT)	1	12190426
5–M10	2.480	HARNESS, I/P WRG (MAY REQUIRE 12450028 I/P COMPT LP & 12102616 PWR RCPT CONN)	99–00	Y07 (M30, C60, JL4, T89) (EXPORT)	1	12190428
5–M10	2.480	HARNESS, I/P WRG (MAY REQUIRE 12450028 I/P COMPT LP & 12102616 PWR RCPT CONN)	99–00	Y07 (MM6, CJ2, JL4, T89) (EXPORT)	1	12190431
5–M10	2.480	HARNESS, I/P WRG (MAY REQUIRE 12450028 I/P COMPT LP & 12102616 PWR RCPT CONN)	99–00	Y07 (MM6, C60, JL4, T89) (EXPORT)	1	12190433
5–M10	2.480	HARNESS, I/P WRG (MAY REQUIRE 12450028 I/P COMPT LP & 12102616 PWR RCPT CONN)	99–00	Y07 (M30, CJ2, T89) (EXC JL4) (EXPORT) ..	1	12190436
5–M10	2.480	HARNESS, I/P WRG (MAY REQUIRE 12450028 I/P COMPT LP & 12102616 PWR RCPT CONN)	99–00	Y07 (M30, C60, T89) (EXC JL4) (EXPORT) ..	1	12190438
5–M10	2.480	HARNESS, I/P WRG (MAY REQUIRE 12450028 I/P COMPT LP & 12102616 PWR RCPT CONN)	99–00	Y07 (MM6, CJ2, T89) (EXC JL4) (EXPORT) ..	1	12190441
5–M10	2.480	HARNESS, I/P WRG (MAY REQUIRE 12450028 I/P COMPT LP & 12102616 PWR RCPT CONN)	99–00	Y07 (MM6, C60, T89) (EXC JL4) (EXPORT) ..	1	12190443
5–M10	2.480	HARNESS, I/P WRG (MAY REQUIRE 12450028 I/P COMPT LP & 12102616 PWR RCPT CONN)	99–00	Y67 (M30, CJ2, T89) (EXPORT)	1	12190446

cardiagn.com

						1Y10-024
5-M10	2.480	HARNESS, I/P WRG (MAY REQUIRE 12450028 I/P COMPT LP & 12102616 PWR RCPT CONN)	99-00	Y67 (M30, C60, T89) (EXPORT)	1	12190448
5-M10	2.480	HARNESS, I/P WRG (MAY REQUIRE 12450028 I/P COMPT LP & 12102616 PWR RCPT CONN)	99-00	Y67 (MM6, CJ2, T89) (EXPORT)	1	12190451
5-M10	2.480	HARNESS, I/P WRG (MAY REQUIRE 12450028 I/P COMPT LP & 12102616 PWR RCPT CONN)	99-00	Y67 (MM6, C60, T89) (EXPORT)	1	12190453
5-M10	2.480	HARNESS, I/P WRG (INCLUDES PROVISIONS FOR MAN. SUPPRESSION SYS. INCLUDES HARN. INLINE P/DOOR) .	00	Y07 (M30, CJ2, JL4, T89) (EXPORT)	1	10442561
5-M10	2.480	HARNESS, I/P WRG (INCLUDES PROVISIONS FOR MAN. SUPPRESSION SYS. INCLUDES HARN. INLINE P/DOOR)	00	Y07 (MM6, CJ2, JL4, T89) (EXPORT)	1	10442565
5-M10	2.480	HARNESS, I/P WRG (INCLUDES PROVISIONS FOR MAN. SUPPRESSION SYS. INCLUDES HARN.INLINE P/DOOR)	00	Y07 (M30, CJ2, T89) (EXC JL4) (EXPORT) ..	1	10442569
5-M10	2.480	HARNESS, I/P WRG (INCLUDES PROVISIONS FOR MAN. SUPPRESSION SYS. INCLUDES HARN.INLINE P/DOOR)	00	Y07 (MM6, CJ2, T89) (EXC JL4) (EXPORT) ..	1	10442573
5-M10	2.480	HARNESS, I/P WRG	00	Y07 (M30, C60, JL4, T89) (EXPORT)	1	15329429
5-M10	2.480	HARNESS, I/P WRG	00	Y07 (MM6, C60, JL4, T89) (EXPORT)	1	15329434
5-M10	2.480	HARNESS, I/P WRG	00	Y07 (M30, C60, T89) (EXC JL4) (EXPORT) ..	1	15329439
5-M10	2.480	HARNESS, I/P WRG	00	Y07 (MM6, C60, T89) (EXC JL4) (EXPORT) ..	1	15329444
5-M10	2.480	HARNESS, I/P WRG (INCLUDES PROVISIONS FOR MAN. SUPPRESSION SYS. INCLUDES HARN.INLINE P/DOOR)	00	Y67 (M30, CJ2, T89) (EXPORT)	1	10442577
5-M10	2.480	HARNESS, I/P WRG (INCLUDES PROVISIONS FOR MAN. SUPPRESSION SYS. INCLUDES HARN.INLINE P/DOOR)	00	Y67 (MM6, CJ2, T89) (EXPORT)	1	10442581
5-M10	2.480	HARNESS, I/P WRG	00	Y67 (M30, C60, T89) (EXPORT)	1	15329449
5-M10	2.480	HARNESS, I/P WRG	00	Y67 (MM6, C60, T89) (EXPORT)	1	15329454
5-M10	2.480	HARNESS, I/P WRG (2ND DSN USED ON/AFTER VIN #15107689, (1ST DSN 10448091))	01	Y07 (M30, CJ2, JL4, T89) (2ND DES) (EXPORT)	1	10310783
5-M10	2.480	HARNESS, I/P WRG (2ND DSN USED ON/AFTER VIN #15107689, (1ST DSN 10448092))	01	Y07 (MM6, CJ2, JL4, T89) (2ND DES) (EXPORT)	1	10310784

cardiagn.com

						1Y10-024
5-M10	2.480	HARNESS, I/P WRG (1ST DSN USED B/4 VIN #15107689, (2ND DSN 10310783))	01	Y07 (M30, CJ2, JL4, T89) (1ST DES) (EXPORT)	1	10448091
5-M10	2.480	HARNESS, I/P WRG (1ST DSN USED B/4 VIN #15107689, (2ND DSN 10310784))	01	Y07 (MM6. CJ2, JL4, T89) (1ST DES) (EXPORT)	1	10448092
5-M10	2.480	HARNESS, I/P WRG (2ND DSN USED ON/AFTER VIN #15107689, (1ST DSN 10448107))	01	Y67 (M30, CJ2, T89) (2ND DES) (EXPORT) ..	1	10310791
5-M10	2.480	HARNESS, I/P WRG (2ND DSN USED ON/AFTER VIN #15107689, (1ST DSN 10448108))	01	Y67 (MM6, CJ2, T89) (2ND DES) (EXPORT) ..	1	10310792
5-M10	2.480	HARNESS, I/P WRG (1ST DSN USED B/4 VIN #15107689, (2ND DSN 10310791))	01	Y67 (M30, CJ2, T89) (1ST DES) (EXPORT) ..	1	10448107
5-M10	2.480	HARNESS, I/P WRG (1ST DSN USED B/4 VIN #15107689, (2ND DSN 10310792))	01	Y67 (MM6, CJ2, T89) (1ST DES) (EXPORT) ..	1	10448108
5-M10	2.480	HARNESS, I/P WRG	02	Y07 (M30, CJ2, T89) (EXPORT)	1	10310783
5-M10	2.480	HARNESS, I/P WRG	02	Y07 (MM6, CJ2, T89) (EXPORT)	1	10310784
5-M10	2.480	HARNESS, I/P WRG	02	YY67 (M30, CJ2, T89) (EXPORT)	1	10310791
5-M10	2.480	HARNESS, I/P WRG	02	YY67 (MM6, CJ2, T89) (EXPORT)	1	10310792
5-M10	2.480	HARNESS, I/P WRG (MUST BE USED W/BODY CONT MDL LABELED 9359821 FOR 1998) ...	98	Y07 (M30, CJ2, JAG, JL4, T89) (EXPORT) ...	1	12190404
5-M10	2.480	HARNESS, I/P WRG (MUST BE USED W/BODY CONT MDL. LABELED 9359821 FOR 1998) ...	98	Y07 (MM6, CJ2, JAG, JL4, T89) (EXPORT) ...	1	12190405
5-M10	2.480	HARNESS, I/P WRG (MUST BE USED W/BODY CONT MDL LABELED 9359821 FOR 1998) ...	98	Y07 (M30, C60, JAG, JL4, T89) (EXPORT) ...	1	12190410
5-M10	2.480	HARNESS, I/P WRG (MUST BE USED W/BODY CONT MDL LABELED 9359821 FOR 1998) ...	98	Y07 (MM6, C60, JAG, JL4, T89) (EXPORT) ...	1	12190411
5-M10	2.480	HARNESS, I/P WRG (MUST BE USED W/BODY CONT MDL LABELED 9359821 FOR 1998) ...	98	Y07 (M30, CJ2, JAG, T89) (EXC JL4, T93, Z49) (EXPORT)	1	12190416
5-M10	2.480	HARNESS, I/P WRG (MUST BE USED W/BODY CONT MDL LABELED 9359821 FOR 1998) ...	98	Y07 (MM6, CJ2, JAG, T89) (EXC JL4, T93, Z49) (EXPORT)	1	12190417
5-M10	2.480	HARNESS, I/P WRG (MUST BE USED W/BODY CONT MDL LABELED 9359821 FOR 1998) ...	98	Y07 (M30, C60, JAG, T89) (EXC JL4, T93, Z49) (EXPORT)	1	12190422
5-M10	2.480	HARNESS, I/P WRG (MUST BE USED W/BODY CONT MDL LABELED 9359821 FOR 1998) ...	98	Y07 (MM6, C60, JAG, T89) (EXC JL4, T93, Z49) (EXPORT)	1	12190423
5-M10	2.480	HARNESS, I/P WRG (MUST BE USED W/BODY CONT MDL LABELED 9359821 FOR 1998) ...	98	Y67 (M30, CJ2, JAG, T89) (EXPORT)	1	12189988
5-M10	2.480	HARNESS, I/P WRG (MUST BE USED W/BODY CONT MDL LABELED 9359821 FOR 1998) ..	98	Y67 (M30, C60, JAG, T89) (EXPORT)	1	12189989

cardiagn.com

						1Y10-024	
	5-M10	2.480	HARNESS, I/P WRG (MUST BE USED W/BODY CONT MDL LABELED 9359821 FOR 1998) ...	98	Y67 (MM6, CJ2, JAG, T89) (EXPORT)	1	12189990
	5-M10	2.480	HARNESS, I/P WRG (MUST BE USED W/BODY CONT MDL LABELED 9359821 FOR 1998) ...	98	Y67 (MM6, C60, JAG, T89) (EXPORT)	1	12189991
13.	5-A8	10.051	MOLDING, W/S UPR GARN	97-98	Y	1	10431271
	5-A8	10.051	MOLDING, W/S UPR GARN	99-02	Y07-67	1	10431271
14.	5-A13	10.195	LENS, S/S ILLUM MIR LP	97-98	Y07	4	12529510
	5-A13	10.195	LENS, S/S ILLUM MIR LP	99	Y07-67	4	12529510
	5-A13	10.195	LENS, S/S ILLUM MIR LP	00-02	Y07-67 (EXPORT)	4	12529510
	5-A13	10.195	LENS, S/S ILLUM MIR LP	02	YY07-67 (EXC C88) (EXPORT)	2	12529510
15.		8.991	BULB, CP-.5 AMP-.9 L-.8 TRADE #37-12VOLT (AC-DELCO #L37)	97-02	.....	AR	9436789

RPO DEFINITIONS
CJ2 – HVAC SYSTEM AIR CONDITIONER FRT, AUTO TEMP CONT, AUX TEMP CONT
C60 – AIR CONDITIONER,FRONT,MANUAL CONTROLS
C88 – SWITCH INFL RST I/P MDL MAN SUPPRESSION – -- DELETE
DD8 – MIRROR,INSIDE,REARVIEW,TILT,AUTOMATIC(LIGHT SENSITIVE)
JAG – BRAKE PROVISIONS ABS LOCATION
JL4 – CONTROL ACTIVE BRAKE
MM6 – TRANSMISSION MAN 6 SPD, BORG WARNER, 85MM, 1ST 2.66, 6TH 0.50, O/D
M30 – TRANSMISSION,AUTOMATIC 4 SPEED,4L60E,ELECTRONIC
N37 – STEERING COLUMN,TILT AND TELESCOPING
T89 – LAMP,TAIL AND STOP(EXPORT)
T93 – LAMP,TAIL AND STOP(SPECIAL)
UV6 – DISPLAY,HEADUP
VBX – LANGUAGE LABEL ARABIC
Z49 – MANDATORY CANADIAN BASE EQUIPMENT MODIFICATIONS(CANADIAN)

cardiagn.com

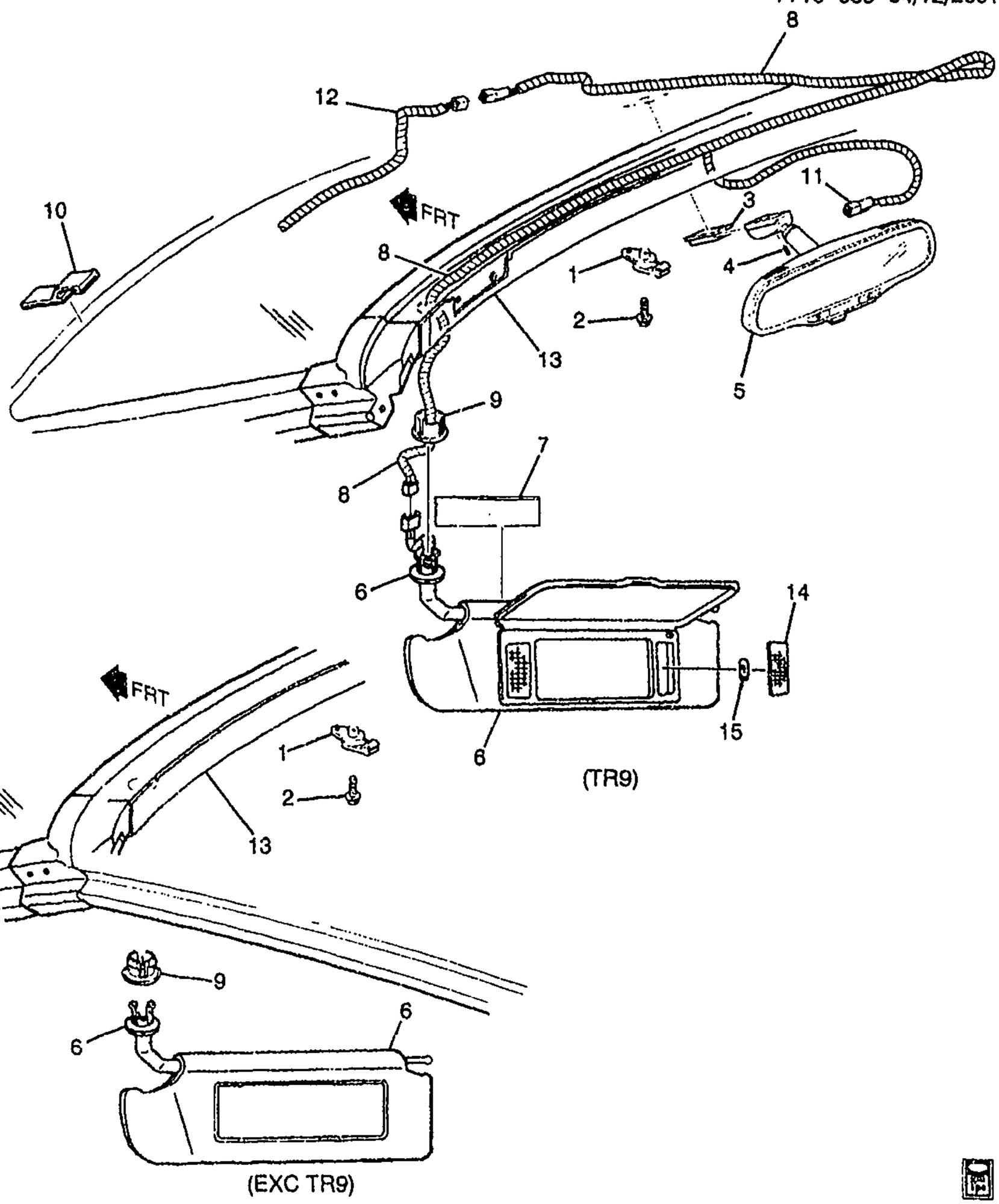

bc

1Y10-039

1999-2002 Y37 SUNSHADE ASM

1.	5-A15	10.219	RETAINER, S/S	99-02	Y	2	10411051
2.		8.977	SCREW, HIGH-HEX WA HD TAP/B 4.200X 1.41X 30.00 PO (S/S RET) (8.900)	99-02		2	11509541
3.	5-A12	10.187	BRACKET, I/S RR VIEW MIR	99-00	Y (UV6)	1	20626174
	5-A12	10.187	BRACKET, I/S RR VIEW MIR	99-00	Y (EXC UV6)	1	25653132

cardiagn.com

							1Y10-039
	5-A12	10.187	BRACKET, I/S RR VIEW MIR	01-02	Y37	1	25653132
4.		N.S.	SCREW, SPRING TOGGLE (PART OF MIRROR ASM)		.....		
5.	5-A11	10.185	MIRROR, I/S RR VIEW (BLACK) (F-CAR DESIGN) (#84)	99-00	Y	1	10295109
	5-A11	10.185	MIRROR, I/S RR VIEW (BLACK) (F-CAR DESIGN) (#84)	01-02	Y (EXC DD8)	1	10295109
	5-A11	10.185	MIRROR, I/S RR VIEW	01-02	Y (DD8)	1	10433960
		8.800	ADHESIVE KIT, GLASS (URETHANE) (W/S)	99-02	.....	1	12346392
6.	5-A13	10.203	SUNSHADE, (BLACK) (W/1" EXPOSED RETAINER PIN) (FOR 1ST DES SEE 10409387)	99	Y37 (EXC TR9, Z49) (2ND DES)	LH	10426491
	5-A13	10.203	SUNSHADE, (BLACK) (W/1" EXPOSED RETAINER PIN) (FOR 1ST DES SEE 10409388)	99	Y37 (EXC TR9, Z49) (2ND DES)	RH	10426492
	5-A13	10.203	SUNSHADE, (BLACK) (W/2.5" EXPOSED RETAINER PIN) (FOR 2ND DES SEE 10426849)	99	Y37 (TR9) (EXC Z49) (1ST DES)	LH	10426849
	5-A13	10.203	SUNSHADE, (BLACK) (W/1" EXPOSED RETAINER PIN) (FOR 1ST DES SEE 10407144)	99	Y37 (TR9) (EXC Z49) (2ND DES)	LH	10426849
	5-A13	10.203	SUNSHADE, (BLACK)	99	Y37 (TR9) (EXC Z49) ..	RH	10426850
	5-A13	10.203	SUNSHADE, ...	00	Y37 (TR9) (EXC C88, Z49)	RH	10442033
	5-A13	10.203	SUNSHADE, ...	00	Y37 (TR9) (EXC C88, Z49)	LH	10442034
	5-A13	10.203	SUNSHADE, ...	01-02	Y37 (EXC C88, Z49) ...	RH	10442033
	5-A13	10.203	SUNSHADE, ...	01-02	Y37 (EXC C88, Z49) ...	LH	10442034
	5-A13	10.203	SUNSHADE, (1" EXPOSED RETAINER PIN) (BLACK) (EARLY 2000 VEHICLES BUILT W/O MANUAL PSIR SUPPRESSION SWITCH IN GLOVE BOX, FOR 2ND DESIGN SEE 10442035)	99-00	Y37 (Z49) (EXC TR9) (1ST DES)	LH	10426493
	5-A13	10.203	SUNSHADE, (1" EXPOSED RETAINER PIN) (BLACK) (EARLY 2000 VEHICLES BUILT W/O MANUAL PSIR SUPPRESSION SWITCH IN GLOVE BOX, FOR 2ND DESIGN SEE 10442035)	99-00	Y37 (Z49) (EXC TR9) (1ST DES)	RH	10426494
	5-A13	10.203	SUNSHADE, (1" EXPOSED RETAINER PIN) (BLACK) (EARLY 2000 VEHICLES BUILT W/O MANUAL PSIR SUPPRESSION SWITCH IN GLOVE BOX, FOR 2ND DESIGN SEE 10442035)	00	Y37 (TR9, Z49) (1ST DES)	LH	10426489
	5-A13	10.203	SUNSHADE, (1" EXPOSED RETAINER PIN) (BLACK) (EARLY 2000 VEHICLES BUILT W/O MANUAL PSIR SUPPRESSION SWITCH IN GLOVE BOX, FOR 2ND DESIGN SEE 10442035)	00	Y37 (TR9, Z49) (1ST DES)	RH	10426490

cardiagn.com

							1Y10–039
	5–A13	10.203	SUNSHADE, (1" EXPOSED RETAINER PIN) (BLACK) (EARLY 2000 VEHICLES BUILT W/O MANUAL PSIR SUPPRESSION SWITCH IN GLOVE BOX, FOR 2ND DESIGN SEE 10442035)	00	Y37 (EXC TR9, Z49) (1ST DES)	LH	10426491
	5–A13	10.203	SUNSHADE, (1" EXPOSED RETAINER PIN) (BLACK) (EARLY 2000 VEHICLES BUILT W/O MANUAL PSIR SUPPRESSION SWITCH IN GLOVE BOX, FOR 2ND DESIGN SEE 10442035)	00	Y37 (EXC TR9, Z49) (1ST DES)	RH	10426492
	5–A13	10.203	SUNSHADE, (1" EXPOSED RETAINER PIN) (LATER 2000 VEHICLES W/MANUAL PSIR SUPPRESSION SWITCH IN GLOVEBOX, FOR 1ST DESIGN SEE 10426490)	00	Y37 (TR9, Z49) (2ND DES)	RH	10442035
	5–A13	10.203	SUNSHADE, (1" EXPOSED RETAINER PIN) (LATER 2000 VEHICLES W/MANUAL PSIR SUPPRESSION SWITCH IN GLOVEBOX, FOR 1ST DESIGN SEE 10426490)	00	Y37 (TR9, Z49) (2ND DES)	LH	10442036
	5–A13	10.203	SUNSHADE, (1" EXPOSED RETAINER PIN) (LATER 2000 VEHICLES W/MANUAL PSIR SUPPRESSION SWITCH IN GLOVEBOX, FOR 1ST DESIGN SEE 10426490)	00	Y37 (EXC TR9, Z49) (2ND DES)	RH	10442037
	5–A13	10.203	SUNSHADE, (1" EXPOSED RETAINER PIN) (LATER 2000 VEHICLES W/MANUAL PSIR SUPPRESSION SWITCH IN GLOVEBOX, FOR 1ST DESIGN SEE 10426490)	00	Y37 (EXC TR9, Z49) (2ND DES)	LH	10442038
	5–A13	10.203	SUNSHADE, (1" EXPOSED RETAINER PIN) (LATER 2000 VEHICLES W/MANUAL PSIR SUPPRESSION SWITCH IN GLOVEBOX, FOR 1ST DESIGN SEE 10426490)	00	Y37 (Z49) (EXC TR9) (2ND DES)	RH	10442039
	5–A13	10.203	SUNSHADE, (1" EXPOSED RETAINER PIN) (LATER 2000 VEHICLES W/MANUAL PSIR SUPPRESSION SWITCH IN GLOVEBOX, FOR 1ST DESIGN SEE 10426490)	00	Y37 (Z49) (EXC TR9) (2ND DES)	LH	10442040
	5–A13	10.203	SUNSHADE, (1" EXPOSED RETAINER PIN)	01–02	Y (Z49)	RH	10442035
	5–A13	10.203	SUNSHADE, (1 ' EXPOSED RETAINER PIN)	01–02	Y (Z49)	LH	10442036
7.	5–N9	8.808	LABEL, INFL RST SYS CAUTION (130.0X65.0)	99–00	Y37 (Z49)	2	10408963
	5–N9	8.808	LABEL, INFL RST SYS CAUTION (140.0X40 0)	99	Y37 (EXC Z49)	2	15001737
	5–N9	8.808	LABEL, INFL RST SYS CAUTION	00–02	Y (EXC C88, Z49)	2	15002610

cardiagn.com

							1Y10-039
8.		N.S.	HARNESS, DM LP & I/S RR VIEW MIR RDG LP WRG				
	* N25	13.100	CONNECTOR, INLINE-TO S/S MIR LP (BLACK) (2-WAY M W/LEADS) (2.535) (AC-DELCO #PT103)	99-02	Y	2	12085481
	5-N25	13.100	CONNECTOR, INLINE--TO S/S MIR LP (GRAY) (8-WAY F) (W/LEADS) (2.535) (AC-DELCO #PT214)	99	Y	1	12101822
	5-N25	13.100	CONNECTOR, INLINE-TO S/S MIR LP (GRAY) (8-WAY F) (W/LEADS) (2.535) (AC-DELCO #PT214)	01-02	Y	1	12101822
9.	5-A15	10.219	BEZEL, S/S ROD (BLACK)	99-02	Y	LH	10431402
	5-A15	10.219	BEZEL, S/S ROD (BLACK)	99-02	Y	RH	10431403
10.		N.S.	SUPPORT, W/S			2	
11.	5-A11	10.185	CONNECTOR, INLINE-TO I/S RR VIEW MIR (4-WAY F W/LEADS) (2.535) (AC-DELCO #PT382)	99-02	Y (EXC DD8)	1	12102900
	5-A11	10.185	CONNECTOR, INLINE-TO I/S RR VIEW MIR (7-WAY F) (W/LEADS) (AC-DELCO #PT1242)	01-02	Y (DD8)	1	15306078
12.	5-M10	2.480	HARNESS, I/P WRG (MAY REQUIRE 12450028 I/P COMPT LP & 12102616 PWR RCPT CONN)	99-00	Y37 (M30, UQ5) (EXC JL4)	1	15329320
	5-M10	2.480	HARNESS, I/P WRG (MAY REQUIRE 12450028 I/P COMPT LP & 12102616 PWR RCPT CONN)	99-00	Y37 (M30, UZ6) (EXC JL4)	1	15329321
	5-M10	2.480	HARNESS, I/P WRG (MAY REQUIRE 12450028 I/P COMPT LP & 12102616 PWR RCPT CONN)	99-00	Y37 (MM6, UQ5) (EXC JL4)	1	15329322
	5-M10	2.480	HARNESS, I/P WRG (MAY REQUIRE 12450028 I/P COMPT LP & 12102616 PWR RCPT CONN)	99-00	Y37 (MM6, UZ6) (EXC JL4)	1	15329323
	5-M10	2.480	HARNESS, I/P WRG	99	Y37 (MM6, C60, JL4, UQ5)	1	15329332
	5-M10	2.480	HARNESS, I/P WRG	99	Y37 (MM6, C60, JL4, UZ6)	1	15329333
	5-M10	2.480	HARNESS, I/P WRG (INCLUDES PROVISIONS FOR MAN. SUPPRESSION SYS. INCLUDES HARN.INLINE P/DOOR)	00	Y37 (M30, CJ2) (EXC N37, T89)	1	10442575
	5-M10	2.480	HARNESS, I/P WRG (INCLUDES PROVISIONS FOR MAN. SUPPRESSION SYS. INCLUDES HARN.INLINE P/DOOR)	00	Y37 (MM6, CJ2) (EXC N37, T89)	1	10442579
	5-M10	2.480	HARNESS, I/P WRG (INCLUDES PROVISIONS FOR MAN. SUPPRESSION SYS. INCLUDES HARN.INLINE P/DOOR)	00	Y37 (MM6, C60, UZ6) (EXC JL4)	1	10442582

cardiagn.com

							1Y10-039
	5-M10	2.480	HARNESS, I/P WRG (INCLUDES PROVISIONS FOR MAN. SUPPRESSION SYS. INCLUDES HARN.INLINE P/DOOR)	00	Y37 (MM6, C60, UQ5) (EXC JL4)	1	10442583
	5-M10	2.480	HARNESS, I/P WRG (INCLUDES PROVISIONS FOR MAN. SUPPRESSION SYS. INCLUDES HARN.INLINE P/DOOR)	00	Y37 (MM6, C60, JL4, UQ5)	1	10442585
	5-M10	2.480	HARNESS, I/P WRG (INCLUDES PROVISIONS FOR MAN. SUPPRESSION SYS. INCLUDES HARN.INLINE P/DOOR)	00	Y37 (MM6, C60, JL4, UZ6)	1	10442586
	5-M10	2.480	HARNESS, I/P WRG	01	Y37 (CJ2)	1	10446105
	5-M10	2.480	HARNESS, I/P WRG	01-02	YY37 (CJ2)	1	10310789
13.	5-A8	10.051	MOLDING, W/S SI GARN	99-02	Y	LH	10247723
	5-A8	10.051	MOLDING, W/S SI GARN	99-02	Y	RH	10247724
14.	5-A13	10.195	LENS, S/S ILLUM MIR LP	99	Y37 (TR9)	4	12529510
	5-A13	10.195	LENS, S/S ILLUM MIR LP	99	YY37 (TR9) (EXPORT) .	2	12529510
	5-A13	10.195	LENS, S/S ILLUM MIR LP	00	Y37 (TR9, Z49) (EXC C88) (EXPORT)	4	12529510
	5-A13	10.195	LENS, S/S ILLUM MIR LP	01-02	YY37 (EXC C88) (EXPORT)	2	12529510
15.		8.991	BULB, CP--.5 AMP-.9 L-.8 TRADE #37-12VOLT (AC-DELCO #L37)	99-02	.....	AR	9436789

RPO DEFINITIONS
CJ2 – HVAC SYSTEM AIR CONDITIONER FRT, AUTO TEMP CONT, AUX TEMP CONT
C60 – AIR CONDITIONER,FRONT,MANUAL CONTROLS
C88 – SWITCH INFL RST I/P MDL MAN SUPPRESSION -- DELETE
DD8 – MIRROR,INSIDE,REARVIEW,TILT,AUTOMATIC(LIGHT SENSITIVE)
JL4 – CONTROL ACTIVE BRAKE
MM6 – TRANSMISSION MAN 6 SPD. BORG WARNER. 85MM, 1ST 2.66, 6TH 0.50, O/D
M30 – TRANSMISSION,AUTOMATIC 4 SPEED,4L60E,ELECTRONIC
N37 – STEERING COLUMN,TILT AND TELESCOPING
TR9 – LAMP GROUP,COURTESY
T89 – LAMP,TAIL AND STOP(EXPORT)
UQ5 – SPEAKER SYSTEM,4,DUAL FRONT DOOR MOUNTED,DUAL EXTENDED RANGE QUARTER MOUNTED
UV6 – DISPLAY,HEADUP
UZ6 – SPEAKER SYSTEM 6, QUAD FRT DR MTD, DUAL QTR MTD
Z49 – MANDATORY CANADIAN BASE EQUIPMENT MODIFICATIONS(CANADIAN)

cardiagn.com

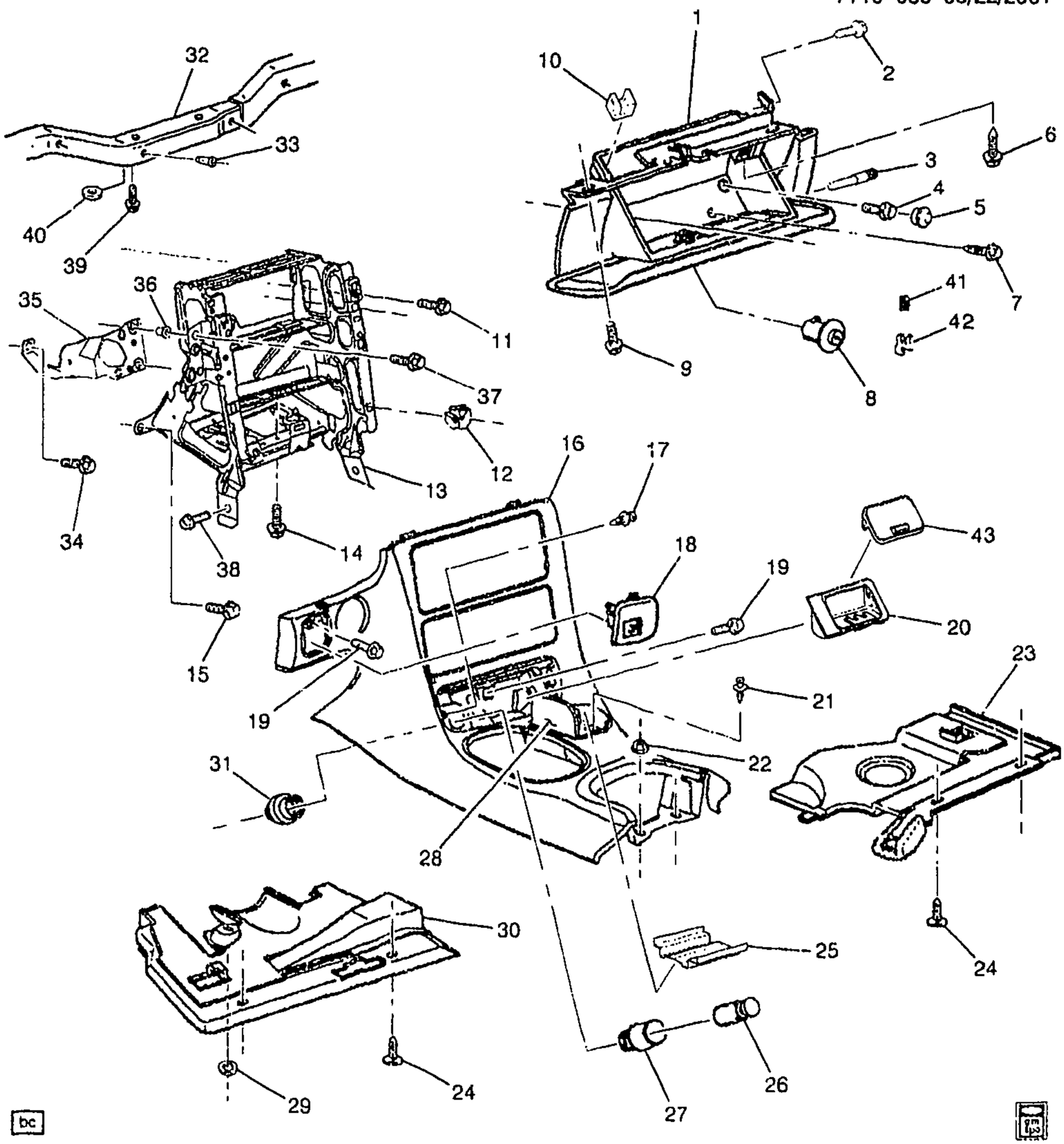

1Y10-033

1997 Y INSTRUMENT PANEL PART 2 (COMPARTMENT/INSULATORS/TRIM PLATES)

1.	5-A18	10.260	COMPARTMENT, I/P (W/DR) (INCLS 8)	97 Y (94I)	1	10416644
	5-A18	10.260	COMPARTMENT, I/P (W/DR) (INCLS 8) (BLACK)	97 Y (19I)	1	10437318
	5-A18	10.260	COMPARTMENT, I/P (W/DR) (INCLS 8) (PEWTER)	97 Y (92I)	1	10437319

cardiagn.com

							1Y10-033
	5-A19	10.266	LOCK, I/P COMPT DR (BLACK) ..	97	Y (19I)	1	22658999
	5-A19	10.266	LOCK, I/P COMPT DR (PEWTER)	97	Y (92I)	1	22659000
	5-A19	10.266	LOCK, I/P COMPT DR (RED)	97	Y (94I)	1	22659001
2.		8.977	BOLT, HWH, M4.2X1.41X20, 7.8 OD, ST, 6172M, ZN BR, TAP, DRILL PT (AT PASS INFL RST I/P MDL BRKT)	97	.....	1	11513568
3.	5-A19	10.262	PIN, I/P COMPT DR HGE	97	Y	2	10280060
4.		8.900	SCREW, M6X1X30, 11 THD, 12.5 OD, 4.8, 6047M, P-PT (TO LWR TIE BAR--POSN #1)	97	.....	2	11508128
5.	5-A18	10.256	PLUG, I/P COMPT ACC HOLE (34.8 OD 2.5 THK) (POLYETHYLENE) (8.010)	97	Y	2	22539445
6.		8.977	SCREW, HEX W/FL WA M4.2X2.25X20 TAP POR (UPR) ..	97	.....	4	11508443
7.		8.900	BOLT, HEX W/CON WA M6X1X40 9.8 PC AC PT17 OD (LWR)	97	.....	2	11503827
8.	5-A19	10.266	CYLINDER, I/P COMPT DR LK (UNCODED) (PART OF 1)	97	Y	1	12534394
9.		8.977	SCREW, HEX W/FL WA M4.2X2.25X20 TAP POR (TO PAD ASM-POSN #4)	97	.....	3	11508443
10.	5-A19	10.263	BUMPER, I/P COMPT DR STOP .	97	Y	2	10285822
11.		8.900	BOLT/SCREW, HEX W/FL WA 17 OD, M6X1X20, 9.8, 4345M, DOG PT (POSN #2 UPR/POSN #3 LWR) (I/P CTR SUPT AT I/P PASS KNEE BOLSTER BRKT)	97	.....	2	11515704
12.	5-A16	10.230	NUT, I/P CTR SUPT BRKT (PART OF 13) (4.2X1.41 TAPPING) (SPL) (3.430)	97	Y	7	25536302
13.	5-A16	10.230	BRACKET, I/P CTR SUPT (INCLS 12)	97	Y	1	10409654
14.		N.S.	STUD, I/P ACSRY TR-TO TUNNEL		.....		
15.		8.900	SCREW, M6X1X30, 11 THD, 12.5 OD, 4.8, 6047M, P-PT (I/P CTR SUPT (AT I/P TIE BAR))	97	.....	2	11508128
16.	5-A17	10.252	PLATE, I/P ACSRY TR (INCLS 17, 21, 25, 28)	97	Y	1	10407815
17.	5-N17	12.009	RETAINER, I/P ASHTRAY (PART OF 16) (10.242)	97	Y	2	10401217
18.	5-A17	10.252	GRILLE, I/P ACSRY TR PLT	97	Y	1	10268306
19.	5-A17	10.252	BOLT, I/P ACSRY TR PLT	97	Y	3	10400761
20.	5-N17	12.009	ASHTRAY, I/P (INCLS 43)	97	Y	1	10247681
21.	5-A18	10.260	RETAINER, I/P CUP HLDR (PART OF 16) (10.242)	97	Y	2	10401217
22.		8.917	NUT, HEX W/CON WA 6X1X5.5 16-OD ZP 9 (I/P ACSRY TR PLT)	97	.....	2	11517293
23.	5-A16	10.230	INSULATOR, I/P (RED)	97	Y (94I)	RH	10406526
	5-A16	10.230	INSULATOR, I/P (BLACK)	97	Y (19I)	RH	10409462
	5-A16	10.230	INSULATOR, I/P (PEWTER)	97	Y (92I)	RH	10409463
24.		8.950	RETAINER, FITS .250 HOLE, 1.01LG.700-OD NYLON BLACK (I/P INSL)	97	.....	LH	10121502

cardiagn.com

						1Y10-033	
		8.950	RETAINER, FITS .250 HOLE, 1 01LG.700-OD NYLON BLACK (I/P INSL)	97		RH	10121502
25.	5-A18	10.260	MAT, I/P CUP HLDR (PART OF 16)	97	Y	1	10274116
26.	5-N15	9.709	LIGHTER, CIG (BLACK) (SM) (CASCO)	97	Y	1	11516141
27.	5-N15	9.709	HOUSING, C/LTR (MATES W/CONN 12085504, (CASCO) 1-PIN CONN)	97	Y	1	11516142
28.	5-A18	10.260	DOOR, I/P CUP HLDR (PART OF 16)	97	Y	1	10268305
29.		8.921	NUT, METRIC PUSH-ON BOLT RETAINING SPRING (I/P INSL)	97		1	10009923
30.	5-A16	10.230	INSULATOR, I/P	97	Y	LH	10421513
31.	5-N15	9.709	RETAINER, C/LTR HSG (CASCO)	97	Y	1	11516144
32.	5-A16	10.230	BAR, I/P TIE (#47)	97	Y	1	10425866
33.	5-A16	10.230	NUT, I/P LWR TIE BAR (4.665)	97	Y	10	10281487
34.		8.977	BOLT, HWH, M4.2X1.41X20, 7.8 OD, ST, 61/2M, ZN BR, TAP DRILL PT (IGN & START SW)	97		1	11513568
35.	5-M9	2.188	HOUSING, IGN & START SW (INCLS 36)	97	Y	1	10404727
36.	5-M9	2.188	NUT, IGN & START SW (PART OF 35) (M6X1.0) (10.512)	97	Y	2	10237960
37.		8.900	BOLT/SCREW, HEX W/FL WA 17 OD, M6X1X20, 9.8, 4345M, DOG PT (I/P CTR SUPT BRKT) (POSN #1)	97		2	11515704
38.		8.900	SCREW, M6X1X30, 11 THD, 12.5 OD, 4.8, 6047M, P-PT (I/P CTR SUPT AT FLR PNL)	97		2	11508128
39.		8.977	BOLT, HEX W/WA, M6X1X35, 9.8, POR, 24 OD, ABPT (I/P TIE BAR)	97		2	11513947
40.	5-A16	10.230	SPACER, I/P (7.832)	97	Y	AR	10149281
41.	5-A19	10.266	SPRING, I/P COMPT DR LK CYL TUMB (SNAP IN) (10.268)	97	Y	4	6259315
	5-A19	10.266	SPRING, I/P COMPT DR LK CYL ANTI-ROTATION TUMB (ANTI-RATTLE)	97	Y	1	20496065
42.	5-A19	10.266	TUMBLER, I/P COMPT DR LK CYL (#1)	97	Y	AR	12522877
	5-A19	10.266	TUMBLER, I/P COMPT DR LK CYL (#2)	97	Y	AR	12522878
	5-A19	10.266	TUMBLER, I/P COMPT DR LK CYL (#3)	97	Y	AR	12522879
	5-A19	10.266	TUMBLER, I/P COMPT DR LK CYL (#4)	97	Y	AR	12522880
	5-A19	10.266	TUMBLER, I/P COMPT DR LK CYL ANTI-ROTATION	97	Y	1	12522881
43.		N.S.	COVER, I/P ASHTRAY (PART OF 20)				

RPO DEFINITIONS
19I – INTERIOR TRIM,BLACK
92I – INTERIOR TRIM SHALE/PEWTER
94I – INTERIOR TRIM FIRETHORN RED (97)

cardiagn.com

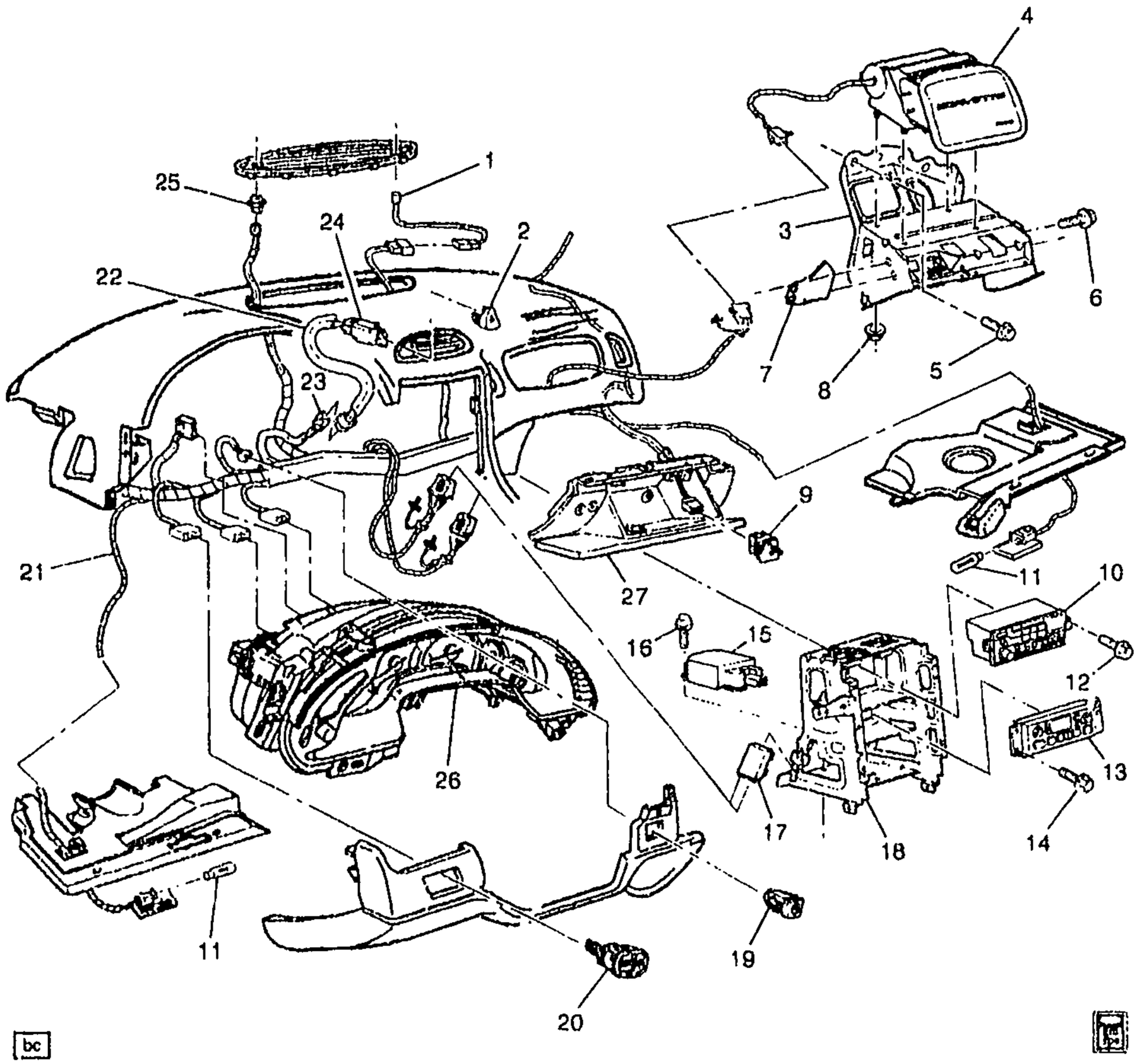

bc

1Y10-049

1997 Y INSTRUMENT PANEL PART 3 (ELECTRICAL)

1.	5-N12	9.275	SENSOR, SUN LOAD TEMP (AC-DELCO #15-71849)	97 Y (CJ2)	1	16137340
	5-N12	9.275	CONNECTOR, SEN-SUN LOAD TEMP (PART OF 21) (BLACK) (2-WAY M W/LEADS) (2.535) (AC-DELCO #PT103)	97 Y	1	12085481
2.	5-N7	2.575	PUSHBUTTON, HAZARD WRNG SW	97 Y	1	10295550
3.	5-N26	14.865	BRACKET, I/P INFL RST MDL (#50)	97 Y (AK5)	1	10437332

cardiagn.com

							1Y10-049
4.	5-N26	14.865	MODULE, I/P INFL RST (MID MOUNT, MORTON 10" MDL)	97	Y (AK5)	1	10407332
	5-N26	14.865	CONNECTOR, MDL-INFL RST I/P (2-WAY M) (W/LEADS)	97	Y	1	12126040
5.		8.900	SCREW, M6X1X30, 11 THD, 12.5 OD, 4.8, 6047M, P-PT (I/P INFL RST MDL BRKT)	97	.....	7	11508128
6.		8.900	SCREW, M6X1X30, 11 THD, 12.5 OD, 4.8, 6047M, P-PT (I/P PASS KNEE BOLS BRKT)	97	.....	2	11508128
7.	5-A16	10.235	BRACKET, I/P PASS KNEE BOLS	97	Y	1	10282775
8.		8.917	NUT, HEX W/CON WA 6X1X5.5 16-OD ZP 9 (INFL RST I/P MDL) .	97	.....	4	11517293
9.	5-A20	10.275	SWITCH, I/P COMPT LP (INCLS LAMP)	97	Y	1	3523034
	5-A20	10.275	CONNECTOR, LP-I/P COMPT (PART OF 21) (2-WAY F W/LEADS) (3.887) (AC-DELCO #PT313)	97	Y	1	12102626
10.	5-N13	9.650	RADIO, AM/FM STEREO & CLK & T/PLYR (AC-DELCO #16257631)	97	Y (UL0, UZ6) (EXC UK1, UL2)	1	16257631
	5-N13	9.650	RADIO, AM/FM STEREO & CLK & CD PLYR (AC-DELCO #16257601)	97	Y (UN0, UZ6)	1	16257601
	5-N14	9.656	CONNECTOR, RDO (NATURAL) (9-WAY F, W/LEADS) (4.329) (AC-DELCO #PT315)	97	Y	1	12102628
	5-N14	9.656	CONNECTOR, RDO (NATURAL) (4-WAY) (W/LEADS) (AC-DELCO #PT323)	97	Y	1	12102636
	5-N14	9.656	CONNECTOR, RDO (WHITE) (10-WAY F) (W/LEADS) (AC-DELCO #PT582)	97	Y	1	12125670
	5-N14	9.656	CONNECTOR, RDO (10-WAY FEMALE M/P 100 (W/LEADS) .) (BLACK) (10-WAY F) (W/LEADS) (2.535) (AC-DELCO #PT108) ...	97	Y	1	12085486
	5-N13	9.650	RADIO, AM/FM STEREO & CLK & T/PLYR (AC-DELCO #16257611)	97	Y (UL0, UL2, UZ6) (EXPORT)	1	16257611
	5-N13	9.650	RADIO, AM/FM STEREO & CLK & T/PLYR (AC-DELCO #16257621)	97	Y (UK1, UL0, UZ6) (EXPORT)	1	16257621
11.		8.991	TRADE#194, 12V, 2CP (I/P C/LP) (AC-DELCO #L194)	97	.....	2	9421330
12.		8.977	SCREW, HEX W/FL WA M4.2X2.25X20 TAP POR (RDO) ..	97	.....	2	11508443
13.	5-N12	9.273	CONTROL, HTR & A/C (AC-DELCO #15-72497)	97	Y (CJ2)	1	9356081
	5-N12	9.273	CONTROL, HTR & A/C (AC-DELCO #15-72537)	97	Y (C60)	1	9366311
14.		8.977	SCREW, HEX W/FL WA M4.2X2.25X20 TAP POR (HTR & A/C CONT)	97	.....	2	11508443
15.	5-N26	14.865	MODULE, INFL RST SEN & DIAG	97	Y (AK5)	1	9378281

cardiagn.com

							1Y10-049
	5-N26	14.865	CONNECTOR, MDL-INFL RST DIAGN ENGY RESV (AC-DELCO #PT1099)	97	Y	1	15305963
16.		8.900	BOLT/SCREW, HEX W/FL WA 17 OD, M6X1X20, 9.8, 4345M, DOG PT (INFL RST DIAGN ENGY RESV MDL)	97		3	11515704
17.	5-M26	2.485	MODULE, HDLP AUTO CONT	97	Y (Z49)	1	10407669
18.	5-A16	10.230	BRACKET, I/P CTR SUPT	97	Y	1	10409654
19.	5-N12	9.275	SENSOR, I/S AIR TEMP (AC-DELCO #15-72496)	97	Y	1	16267411
	5-N12	9.275	CONNECTOR, SEN-I/S AIR TEMP (PART OF 21) (2-WAY F W/LEADS W/INDEX TAB OTR EDGE OF CAVITY B) (2.535) (AC-DELCO #PT146)	97	Y	1	12085535
20.	5-N19	12.243	SWITCH, R/CMPT LID REL (AC-DELCO #D7012C)	97	Y (EXC T96, VD1)	1	12135157
	5-M26	2.485	SWITCH, FOG LP (INCLUDES HATCH RELEASE SWITCH)	97	Y (T96) (EXC VD1)	1	12135155
	5-M26	2.485	CONNECTOR, SW-FOG LP (PART OF 21) (2.535) (AC-DELCO #PT265)	97	Y	1	12101874
		8.991	BULB, FRT FOG LP IND LP (.5CP) (9.279) (AC-DELCO #16056613)	97	Y	1	16056613
	5-M26	2.485	SWITCH, FOG LP	97	Y (VD1) (EXPORT)	1	12135156
21.	5-M10	2.480	HARNESS, I/P WRG (INCLS 23, 25) (SEE GROUP 10.000 "INSTRUMENT PANEL PART 3" FOR DETAILED ILLUSTRATED VIEW.)				
	5-M9	2.440	CONNECTOR, DATA LINK (16-WAY F W/O LEADS W/MTG TABS) (AC-DELCO #PT1477)	97	Y	1	12110250
	5-M9	2.440	CONNECTOR, DATA LINK (12-WAY F) (W/LEADS AND CAP) (AC-DELCO #PT1101)	97	Y	1	15305914
	5-M26	2.485	CONNECTOR, MDL-DAYTIME RUNNING LP CONT (BLUE) (8-WAY F) (W/LEADS) (2.535) (AC-DELCO #PT266)	97	Y	1	12101875
	5-M26	2.485	CONNECTOR, MDL-DAYTIME RUNNING LP CONT (BLACK) (8-WAY F W/LEADS, 7-12GA & 4-18GA AS REQ) (2.535) (AC-DELCO #PT1346)	97	Y07	1	15306189
22.	5-M10	2.480	HARNESS, HAZARD LP & T/SIG LP FLSHR WRG	97	Y	1	12163776
23.	5-N7	2.575	CONNECTOR, SW-HAZARD WRNG (PART OF 21) (10-WAY F W/LEADS) (2.535) (AC-DELCO #PT150)	97	Y	1	12101762
	5-N7	2.575	CONNECTOR, SW-HAZARD WRNG (PART OF 21) (10-WAY M W/LEADS) (2.535) (AC-DELCO #PT215)	97	Y	1	12101823
24.	5-N7	2.575	SWITCH, HAZARD WRNG	97	Y (EXC VD1)	1	10406626

cardiagn.com

							1Y10-049
	5-N7	2.575	SWITCH, HAZARD WRNG	97	Y (VD1) (EXPORT)	1	10406627
25.	5-M26	2.485	SENSOR, DAYTIME RUNNING LP AMB LGT	97	Y (Z49)	1	10261143
	5-M26	2.485	CONNECTOR, SEN-DAYTIME RUNNING LP AMB LGT (PART OF 21) (2-WAY F W/LEADS W/INDEX TAB OTR EDGE OF CAVITY B) (2.535) (AC-DELCO #PT146)	97	Y	1	12085535
26.		N.S.	CLUSTER, INST (CLUSTERS SOLD THRU ACD REPAIR CENTERS)		.....		
	5-N17	9.768	CONNECTOR, DISPLAY-DRVR INFO (PART OF 21) (34-WAY F) (9.735)	97	Y	1	12065803
27.	5-A18	10.260	COMPARTMENT, I/P (W/DR)	97	Y (94I)	1	10416644
	5-A18	10.260	COMPARTMENT, I/P (W/DR) (BLACK)	97	Y (19I)	1	10437318
	5-A18	10.260	COMPARTMENT, I/P (W/DR) (PEWTER)	97	Y (92I)	1	10437319

RPO DEFINITIONS

AK5 -- RESTRAINT SYSTEM,FRONT SEAT,INFLATABLE,DRIVER AND PASSENGER
CJ2 -- HVAC SYSTEM AIR CONDITIONER FRT, AUTO TEMP CONT, AUX TEMP CONT
C60 -- AIR CONDITIONER,FRONT,MANUAL CONTROLS
T96 -- LAMP,FRONT FOG
UK1 -- RADIO FREQUENCY(JAPANESE)
UL0 -- RADIO AM/FM STEREO, SEEK/SCAN, AUTO REV MUSIC SEARCH CASS, AUTO TONE, CLOCK, ETR.
UL2 -- RADIO FREQUENCY(EUROPEAN)
UN0 -- RADIO,AM/FM,STEREO,SEEK/SCAN,COMPACT DISC,AUTO TONE,CLOCK,ETR
UZ6 -- SPEAKER SYSTEM 6, QUAD FRT DR MTD, DUAL QTR MTD
VD1 -- PROVISION OPTIONS,EUROPE(EXPORT)
Z49 -- MANDATORY CANADIAN BASE EQUIPMENT MODIFICATIONS(CANADIAN)
19I -- INTERIOR TRIM,BLACK
92I -- INTERIOR TRIM SHALE/PEWTER
94I -- INTERIOR TRIM FIRETHORN RED (97)

cardiagn.com

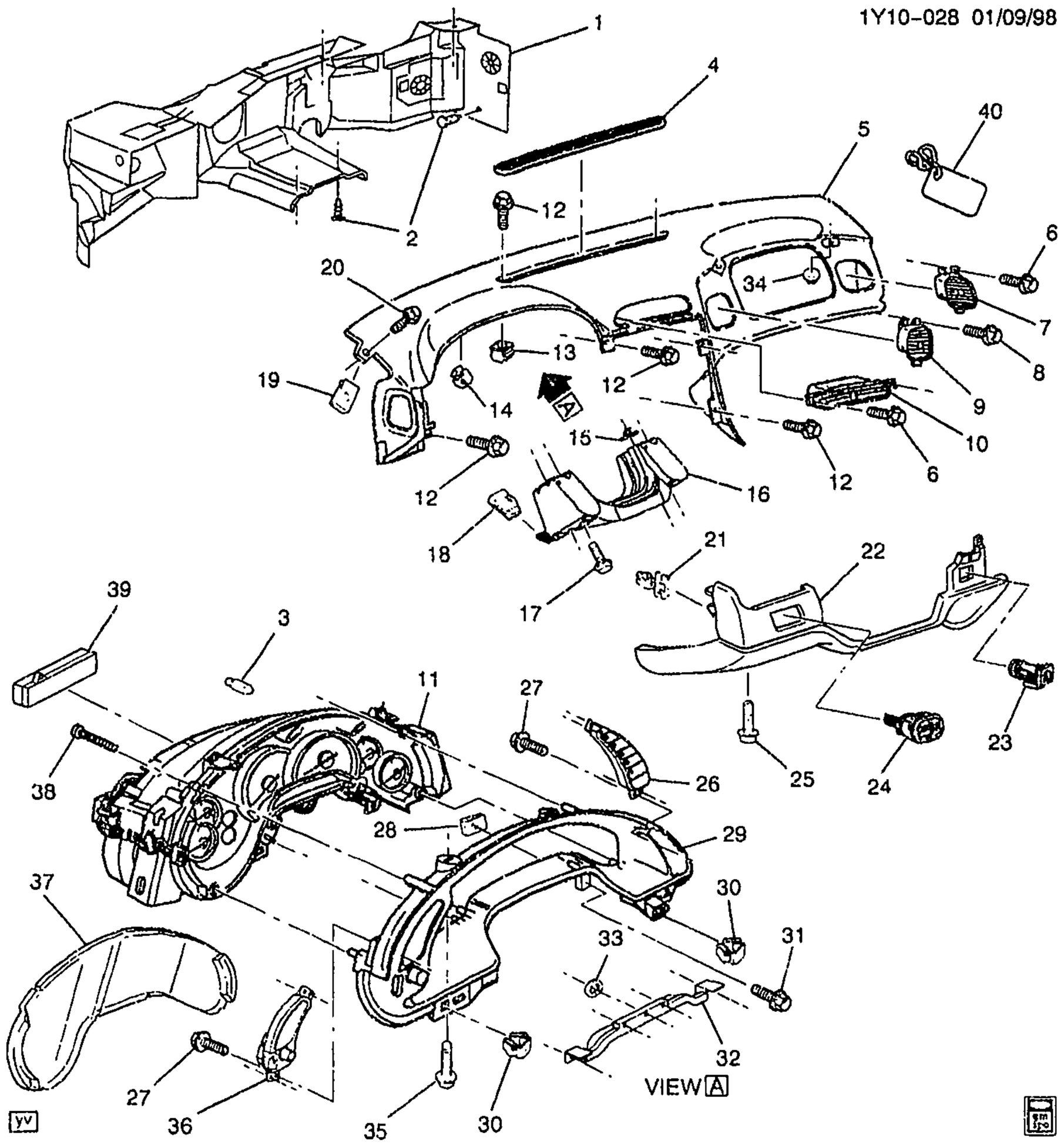

1997-1998 Y INSTRUMENT PANEL PART 1 (TRIM PAD/PANELS/CLUSTER)

1.	5-N21	12.804	INSULATOR, DA PNL	97-98	Y	1 10433334
2.		8.950	RETAINER, FITS .250 HOLE, 1.01LG.700-OD NYLON BLACK (DA PNL INSL)	97-98	.....	5 10121502
3.	5-N17	9.744	BULB, INST CSTR (PART OF 11) (AC-DELCO #12533422)	97-98	Y	1 12533422
4.	5-N17	9.779	GRILLE, W/S DEFR NOZ (BLACK)	97-98	Y (CJ2)	1 10400366

© 2001 GENERAL MOTORS SERVICE PARTS OPERATIONS-CHEVROLET-15Y

cardiagn.com

							1Y10-028
	5-N17	9.779	GRILLE, W/S DEFR NOZ (BLACK)	97-98	Y (C60)	1	10400367
5.	5-A16	10.235	PAD, I/P UPR TR (INCLS 40) (W/ OTLTS & DUCTS) (BLACK)	97-98	Y (EXC UV6)	1	10303150
	5-A16	10.235	PAD, I/P UPR TR (INCLS 40) (BLACK)	97-98	Y	1	10406513
	5-A16	10.235	PAD, I/P UPR TR (INCLS 40) (LESS OTLTS & DUCTS) (BLACK)	97-98	Y (EXC UV6)	1	10443974
6.		8.977	SCREW, HEX W/FL WA HI-LO TAP M4.2X1.41X16, 8-OD, BTHL PT, FLTD HRD, FL (I/P OTR AIR OTLT)	97-98		6	11508917
		8.929	WASHER, FL 7/32X1/2X5/8 1050 CAD HARD (I/P OTR AIR OTLT)	97-98		6	2077521
7.	5-N11	9.262	OUTLET, I/P CTR AIR (FAR RIGHT POSITION)	97-98	Y	1	10406516
8.		8.977	SCREW, HEX W/FL WA HI-LO TAP M4.2X1.41X16, 8-OD, BTHL PT, FLTD HRD, FL (I/P CTR AIR OTLT)	97-98		3	11508917
		8.929	WASHER, FL 7/32X1/2X5/8 1050 CAD HARD (I/P OTR AIR OTLT)	97-98		6	2077521
9.	5-N11	9.262	OUTLET, I/P CTR AIR	97-98	Y	RH	10406515
10.	5-N11	9.262	OUTLET, I/P CTR AIR	97-98	Y	LH	10406514
11.		N.S.	CLUSTER, INST (INCLS 3, 29, 32, 37, 39) (CLUSTERS SOLD THRU ACD REPAIR CENTERS)				
12.		8.977	SCREW, HEX W/FL WA M4.2X2.25X20 TAP POR (I/P UPR TR PAD (AT PLNM PNL))	97-98		7	11508443
13.	5-A16	10.235	NUT, I/P UPR TR PAD (4.2X1.41 TAPPING) (SPL) (3.430)	97-98	Y	2	25536302
14.	5-A16	10.235	NUT, I/P UPR TR PAD (M4.2X1.41) (PUSH-IN FOR 12MM SQ HOLE) (10.252)	97-98	Y	4	17988488
15.	5-A16	10.235	NUT, I/P DRVR KNEE BOLS BRKT (4.2X1.41 TAPPING) (SPL) (3.430)	97-98	Y	4	25536302
16.	5-A16	10.235	BRACKET, I/P DRVR KNEE BOLS (10.230)	97-98	Y	1	10289379
17.		8.977	SCREW, HEX W/FL WA M4.2X2.25X20 TAP POR (I/P DRVR KNEE BOLS)	97-98		4	11508443
18.		8.921	NUT, U TYPE, MULTI THD, PREV TORQ, M4.2X1.41TAP, 8.1REACH, 0.65-3.80 PNLS 1065 PZOR (I/P DRVR KNEE BOLS) (AC-DELCO #11513599)	97-98		2	11513599
19.		8.921	NUT, U TYPE, MULTI THD, PREV TORQ, M4.2X1.41TAP, 8.1REACH, 0.65-3.80 PNLS 1065 PZOR (I/P UPR T/PNL) (AC-DELCO #11513599)	97-98		2	11513599
20.		8.977	BOLT-SCREW, M4.2X1.41X13, 5.4 THD, 12.5 OD, GM6172M, GM6138M (I/P UPR TR PAD (AT FRT S/D H/PLR))	97-98		2	15714277

cardiagn.com

							1Y10-028
21.	5-A16	10.235	RETAINER, I/P DRVR KNEE BOLS PNL (PUSH IN)	97-98	Y	2	21040288
22.	5-A16	10.235	PANEL, I/P DRVR KNEE BOLS (BLACK)	97-98	Y (19I)	1	10426429
	5-A16	10.235	PANEL, I/P DRVR KNEE BOLS (PEWTER)	97	Y07 (92I)	1	10426430
	5-A16	10.235	PANEL, I/P DRVR KNEE BOLS (RED)	97-98	Y (94I)	1	10426431
	5-A16	10.235	PANEL, I/P DRVR KNEE BOLS (PEWTER)	98	Y07-67 (92I)	1	10426430
	5-A16	10.235	PANEL, I/P DRVR KNEE BOLS (CAMEL)	98	Y07-67 (67I)	1	10426432
23.	5-N12	9.275	SENSOR, I/S AIR TEMP (AC-DELCO #15-72496)	97-98	Y	1	16267411
24.	5-M26	2.485	SWITCH, FOG LP (INCLUDES HATCH RELEASE SWITCH)	97-98	Y (T96) (EXC VD1)	1	12135155
		8.991	BULB, FRT FOG LP IND LP (.5CP) (9.279) (AC-DELCO #16056613)	97-98	Y	1	16056613
	5-M26	2.485	SWITCH, FOG LP	97-98	Y (VD1) (EXPORT)	1	12135156
25.		8.977	SCREW, PAN HD TORX W/FL WA M4.2X1.41X20303 BLK (I/P DRVR KNEE BOLS PNL)	97-98		3	11508561
26.	5-N17	9.768	SWITCH, DRVR INFO DISPLAY (AC-DELCO #12135152)	97-98	Y (U52)	1	12135152
27.	5-A17	10.252	BOLT, I/P ACSRY BZL (M4.2X1.41X16 TORX RND HD) (16.069)	97-98	Y	4	15659231
28.		8.921	NUT, U TYPE, MULTI THD, PREV TORQ, M4.2X1.41TAP, 8.1REACH, 0.65-3.80 PNLS 1065 PZOR (INST CSTR) (POSN #1) (AC-DELCO #11513599)	97-98		2	11513599
29.	5-N17	9.743	BEZEL, I/P CSTR TR PLT (PART OF 11)	97-98	Y (U52)	1	10417123
30.	5-N17	9.735	NUT, INST CSTR (POSN #2) (4.2X1.41 TAPPING) (SPL) (3.430)	97-98	Y	2	25536302
31.		8.977	BOLT, HWH, M4.2X1.41X20, 7.8 OD, ST, 6172M, ZN BR, TAP, DRILL PT (INST CSTR)	97-98		2	11513568
32.		N.S.	SEAL, I/P STRG COL OPG (PART OF 11)				
33.		8.921	NUT-PUSH ON SPRING FOR .153 TO .159 INCH DIA STUD, .70 OD, .35 THK, SAE1050 CRB .SPR .STL, PC (INST CSTR) (AC-DELCO #11501937)	97-98		5	11501937
34.		8.917	NUT, HFH 6X1X7 SELF LK 14.2-OD (9) 7111M ALL MET PREV TORQ (I/P ASST HDL)	97-98		2	11516075
35.		8.977	SCREW, PAN HD W/WA, TORX, M4.2X1.41X20, NO (INST CSTR LENS)	97-98		2	11515439
36.	5-M27	2.490	SWITCH, I/P LP DIMR (AC-DELCO #D1577E)	97-98	Y	1	12135149
		8.991	BULB, I/P LP DIMR SW (W/O BOOT) (2.490)	97-98	Y (U52)	1	12198644

cardiagn.com

							1Y10–028
37.	5–N17	9.748	LENS, INST CSTR (PART OF 11) (AC–DELCO #12533420)	97–98	Y (U52)	1	12533420
38.		8.977	SCREW, PAN HD C/R TAP M4.2X1.41X30 AB POR (I/P CSTR TR PLT BZL) (8.913)	97–98	.....	6	11517072
39.	5–C17	11.927	INVERTER, LUMINESCENT LP (PART OF 11)	97–98	Y	1	12533421
40.	5–N9	8.808	TAG, INFL RST I/P MDL CAUTION (PART OF 5)	97–98	Y	1	15002618

RPO DEFINITIONS
CJ2 – HVAC SYSTEM AIR CONDITIONER FRT, AUTO TEMP CONT, AUX TEMP CONT
C60 – AIR CONDITIONER,FRONT,MANUAL CONTROLS
T96 – LAMP,FRONT FOG
UV6 – DISPLAY,HEADUP
U52 – CLUSTER,INSTRUMENT(ELECTRONIC)
VD1 – PROVISION OPTIONS,EUROPE(EXPORT)
19I – INTERIOR TRIM,BLACK
67I – INTERIOR TRIM,CAMEL
92I – INTERIOR TRIM SHALE/PEWTER
94I – INTERIOR TRIM FIRETHORN RED (97)

cardiagn.com

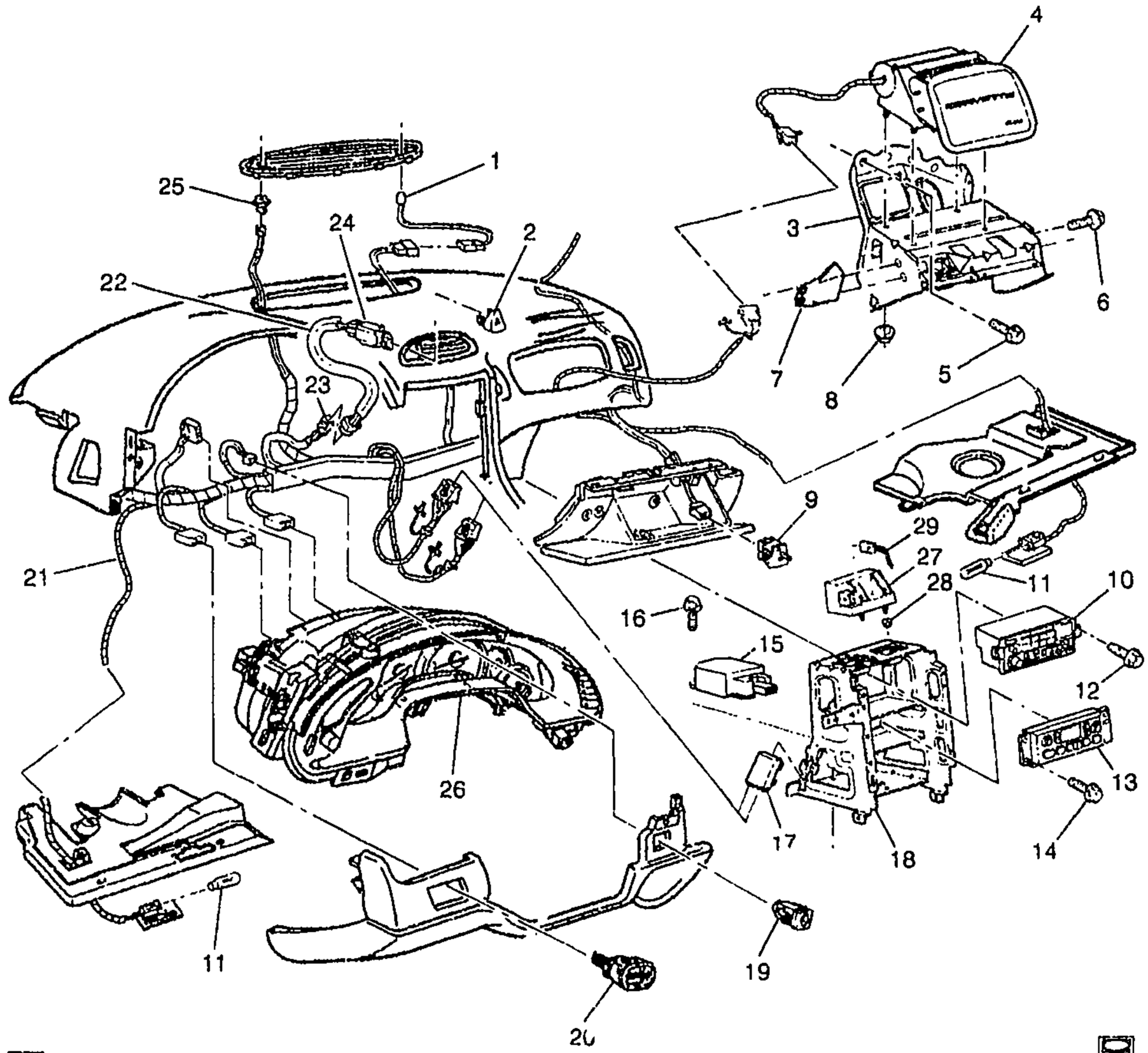

yv

1Y10-029

1998 Y INSTRUMENT PANEL PART 3 (ELECTRICAL)

1.	5-N12	9.275	SENSOR, SUN LOAD TEMP (AC-DELCO #15-71849)	98	Y (CJ2)	1	16137340
	5-N12	9.275	CONNECTOR, SEN-SUN LOAD TEMP (PART OF 21) (BLACK) (2-WAY M W/LEADS) (2.535) (AC-DELCO #PT103)	98	Y	1	12085481
2.	5-N7	2.575	PUSHBUTTON, HAZARD WRNG SW	98	Y	1	10295550
3.	5-N26	14.865	BRACKET, I/P INFL RST MDL (#50)	98	Y (AK5)	1	10437332
4.	5-N26	14.865	MODULE, I/P INFL RST	98	Y (AK5)	1	10411125
	5-N26	14.865	CONNECTOR, MDL-INFL RST I/P (2-WAY M) (W/LEADS)	98	Y	1	12126040

cardiagn.com

							1Y10-029
5.		8.900	SCREW, M6X1X30, 11 THD, 12.5 OD, 4.8, 6047M, P-PT (I/P INFL RST MDL BRKT)	98		7	11508128
6.		8.900	SCREW, M6X1X30, 11 THD, 12.5 OD, 4.8, 6047M, P-PT (I/P PASS KNEE BOLS BRKT)	98		2	11508128
7.	5-A16	10.235	BRACKET, I/P PASS KNEE BOLS	98	Y	1	10282775
8.		8.917	NUT, HEX W/CON WA 6X1X5.5 16-OD ZP 9 (INFL RST I/P MDL)	98		4	11517293
9.	5-A20	10.275	SWITCH, I/P COMPT LP (INCLS LAMP)	98	Y	1	3523034
	5-A20	10.275	CONNECTOR, LP-I/P COMPT (PART OF 21) (2-WAY F W/LEADS) (3.687) (AC-DELCO #PT313)	98	Y	1	12102626
10.	5-N13	9.650	RADIO, AM/FM STEREO & CLK & T/PLYR (AC-DELCO #16257631)	98	Y (UL0, UZ6) (EXC UK1, UL2)	1	16257631
	5-N13	9.650	RADIO, AM/FM STEREO & CLK & CD PLYR (AC-DELCO #16257601)	98	Y (UN0, UZ6)	1	16257601
	5-N14	9.656	CONNECTOR, RDO (NATURAL) (9-WAY F, W/LEADS) (4.329) (AC-DELCO #PT315)	98	Y	1	12102628
	5-N14	9.656	CONNECTOR, RDO (NATURAL) (4-WAY) (W/LEADS) (AC-DELCO #PT323)	98	Y	1	12102636
	5-N14	9.656	CONNECTOR, RDO (WHITE) (10-WAY F) (W/LEADS) (AC-DELCO #PT582)	98	Y	1	12125670
	5-N14	9.656	CONNECTOR, RDO (10--WAY FEMALE M/P 100 (W/LEADS) .) (BLACK) (10-WAY F) (W/LEADS) (2.535) (AC-DELCO #PT108)	98	Y	1	12085486
	5-N13	9.650	RADIO, AM/FM STEREO & CLK & T/PLYR (AC-DELCO #16257611)	98	Y (UL0, UL2, UZ6) (EXPORT)	1	16257611
	5-N13	9.650	RADIO, AM/FM STEREO & CLK & T/PLYR (AC-DELCO #16257621)	98	Y (UK1, UL0, UZ6) (EXPORT)	1	16257621
11.		8.991	TRADE#194, 12V, 2CP (I/P C/LP) (AC-DELCO #L194)	98		2	9421330
12.		8.977	SCREW, HEX W/FL WA M4.2X2.25X20 TAP POR (RDO)	98		2	11508443
13.	5-N12	9.273	CONTROL, HTR & A/C (AC-DELCO #15-72537)	98	Y (C60)	1	9366311
	5-N12	9.273	CONTROL, HTR & A/C (AC-DELCO #15-72499)	98	Y (CJ2)	1	9352181
14.		8.977	SCREW, HEX W/FL WA M4.2X2.25X20 TAP POR (HTR & A/C CONT)	98		2	11508443
15.	5-N26	14.865	MODULE, INFL RST SEN & DIAG	98	Y (AK5)	1	9378281
	5-N26	14.865	CONNECTOR, MDL-INFL RST DIAGN ENGY RESV (AC-DELCO #PT1099)	98	Y	1	15305983

cardiagn.com

							1Y10-029
16.		8.900	BOLT/SCREW, HEX W/FL WA 17 OD, M6X1X20, 9.8, 4345M, DOG PT (INFL RST DIAGN ENGY RESV MDL)	98	.....	3	11515704
17.	5-M26	2.485	MODULE, HDLP AUTO CONT ...	98	Y (Z49)	1	10407669
18.	5-A16	10.230	BRACKET, I/P CTR SUPT	98	Y	1	10409654
19.	5-N12	9.275	SENSOR, I/S AIR TEMP (AC-DELCO #15-72496)	98	Y	1	16267411
	5-N12	9.275	CONNECTOR, SEN-I/S AIR TEMP (PART OF 21) (2-WAY F W/LEADS W/INDEX TAB OTR EDGE OF CAVITY B) (2.535) (AC-DELCO #PT146)	98	Y	1	12085535
20.	5-N19	12.243	SWITCH, R/CMPT LID REL (AC-DELCO #D7012C)	98	Y (EXC T96, VD1)	1	12135157
	5-M26	2.485	SWITCH, FOG LP (INCLUDES HATCH RELEASE SWITCH)	98	Y (T96) (EXC VD1)	1	12135155
	5-M26	2.485	CONNECTOR, SW-FOG LP (PART OF 21) (2.535) (AC-DELCO #PT265)	98	Y	1	12101874
		8.991	BULB, FRT FOG LP IND LP (.5CP) (9.279) (AC-DELCO #16056613)	98	Y	1	16056613
	5-M26	2.485	SWITCH, FOG LP	98	Y (VD1) (EXPORT)	1	12135156
21.	5-M10	2.480	HARNESS, I/P WRG (INCLS 23, 25) (SEE GROUP 10.000 "INSTRUMENT PANEL PART 3" FOR DETAILED ILLUSTRATED VIEW.)		.....		
	5-M9	2.440	CONNECTOR, DATA LINK (16-WAY F W/O LEADS W/MTG TABS) (AC-DELCO #PT1477) ..	98	Y	1	12110250
	5-M9	2.440	CONNECTOR, DATA LINK (12-WAY F) (W/LEADS AND CAP) (AC-DELCO #PT1101)	98	Y	1	15305914
	5-M26	2.485	CONNECTOR, MDL-DAYTIME RUNNING LP CONT (BLACK) (8-WAY F W/LEADS, 7-12GA & 4-18GA AS REQ) (2.535) (AC-DELCO #PT1346)	98	Y07	1	15306189
	5-M26	2.485	CONNECTOR, MDL-DAYTIME RUNNING LP CONT (BLUE) (8-WAY F) (W/LEADS) (2.535) (AC-DELCO #PT266)	98	Y07	1	12101875
22.	5-M10	2.480	HARNESS, HAZARD LP & T/SIG LP FLSHR WRG	98	Y	1	12163776
23.	5-N7	2.575	CONNECTOR, SW-HAZARD WRNG (PART OF 21) (10-WAY F W/LEADS) (2.535) (AC-DELCO #PT150)	98	Y	1	12101762
	5-N7	2.575	CONNECTOR, SW-HAZARD WRNG (PART OF 21) (10-WAY M W/LEADS) (2.535) (AC-DELCO #PT215)	98	Y	1	12101823
24.	5-N7	2.575	SWITCH, HAZARD WRNG	98	Y (EXC VD1)	1	10406626
	5-N7	2.575	SWITCH, HAZARD WRNG	98	Y (VD1) (EXPORT)	1	10406627
25.	5-M26	2.485	SENSOR, DAYTIME RUNNING LP AMB LGT	98	Y (Z49)	1	10261143

cardiagn.com

							1Y10-029
	5-M26	2.485	CONNECTOR, SEN-DAYTIME RUNNING LP AMB LGT (PART OF 21) (2-WAY F W/LEADS W/INDEX TAB OTR EDGE OF CAVITY B) (2.535) (AC-DELCO #PT146)	98	Y	1	12085535
26.		N.S.	CLUSTER, INST (CLUSTERS SOLD THRU ACD REPAIR CENTERS)		.....		
	5-N17	9.768	CONNECTOR, DISPLAY-DRVR INFO (PART OF 21) (34-WAY F) (9.735)	98	Y	1	12065803
27.	5-N8	7.440	SENSOR, VEH YAW	98	Y (JL4)	1	10277333
28.		8.917	NUT, HEX W/CON WA M6X1X5.5 (9) 7111M 16-OD (VEH YAW SEN)	98	.....	2	11514517
29.	5-N8	7.475	CONNECTOR, SEN-VEH YAW & LAT ACCLRM (3-WAY F) (W/LEADS) (2.530) (AC-DELCO #PT1490)	98	Y	1	12117320

RPO DEFINITIONS
AK5 – RESTRAINT SYSTEM,FRONT SEAT,INFLATABLE,DRIVER AND PASSENGER
CJ2 – HVAC SYSTEM AIR CONDITIONER FRT, AUTO TEMP CONT, AUX TEMP CONT
C60 – AIR CONDITIONER,FRONT,MANUAL CONTROLS
JL4 – CONTROL ACTIVE BRAKE
T96 – LAMP,FRONT FOG
UK1 – RADIO FREQUENCY(JAPANESE)
UL0 – RADIO AM/FM STEREO, SEEK/SCAN, AUTO REV MUSIC SEARCH CASS, AUTO TONE, CLOCK, ETR.
UL2 – RADIO FREQUENCY(EUROPEAN)
UN0 – RADIO,AM/FM,STEREO,SEEK/SCAN,COMPACT DISC,AUTO TONE,CLOCK,ETR
UZ6 – SPEAKER SYSTEM 6, QUAD FRT DR MTD, DUAL QTR MTD
VD1 – PROVISION OPTIONS,EUROPE(EXPORT)
Z49 – MANDATORY CANADIAN BASE EQUIPMENT MODIFICATIONS(CANADIAN)

cardiagn.com

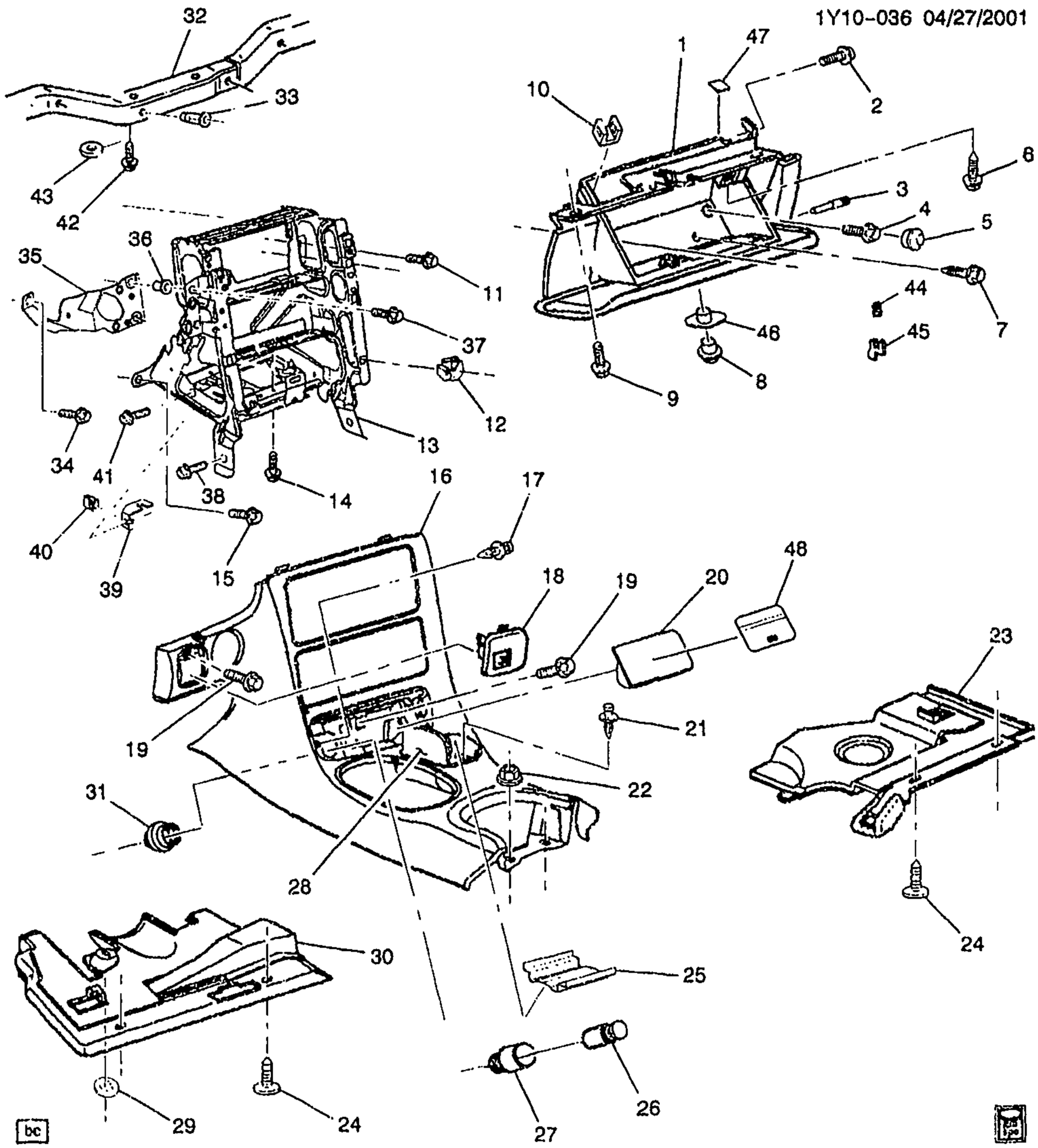

1998-1999 Y INSTRUMENT PANEL PART 2 (COMPARTMENT/INSULATORS/TRIM PLATES)

1.	5-A18	10.260	COMPARTMENT, I/P (W/DR) (INCLS 3, 10, 46, 47)	98	Y (94I)	1	10416644
	5-A18	10.260	COMPARTMENT, I/P (W/DR) (INCLS 3, 10, 46, 47) (BLACK) ...	98-99	Y (19I)	1	10437318
	5-A18	10.260	COMPARTMENT, I/P (W/DR) (INCLS 3, 10, 46, 47) (PEWTER) .	98-99	Y07-67 (92I)	1	10437319

cardiagn.com

							1Y10-036
	5-A18	10.260	COMPARTMENT, I/P (W/DR) (INCLS 3, 10, 46, 47)	99	Y07-67 (94I)	1	10416644
2.		8.977	BOLT, HWH, M4.2X1.41X20, 7.8 OD, ST, 6172M, ZN BR, TAP, DRILL PT (AT PASS INFL RST I/P MDL BRKT)	98-99		1	11513568
3.	5-A19	10.262	PIN, I/P COMPT DR HGE (PART OF 1)	98-99	Y	2	10280060
4.		8.900	SCREW, M6X1X30, 11 THD, 12.5 OD, 4.8, 6047M, P-PT (TO LWR TIE BAR-POSN #1)	98-99		2	11508128
5.	5-A18	10.256	PLUG, I/P COMPT ACC HOLE (34.8 OD 2.5 THK) (POLYETHYLENE) (8.010)	98-99	Y	2	22539445
6.		8.977	SCREW, HEX W/FL WA M4.2X2.25X20 TAP POR (UPR)	98-99		4	11508443
7.		8.900	BOLT, HEX W/CON WA M6X1X40 9.8 PC AC PT17 OD (LWR)	98-99		2	11503827
8.	5-A19	10.266	CYLINDER, I/P COMPT DR LK (UNCODED) (INCLS 44, 45)	98-99	Y	1	12534394
9.		8.977	SCREW, HEX W/FL WA M4.2X2.25X20 TAP POR (TO PAD ASM-POSN #4)	98-99		3	11508443
10.	5-A19	10.263	BUMPER, I/P COMPT DR STOP (PART OF 1)	98-99	Y	2	10285822
11.		8.900	BOLT/SCREW, HEX W/FL WA 17 OD, M6X1X20, 9.8, 4345M, DOG PT (POSN #2 UPR/POSN #3 LWR) (I/P CTR SUPT AT I/P PASS KNEE BOLSTER BRKT)	98-99		2	11515704
12.	5-A16	10.230	NUT, I/P CTR SUPT BRKT (PART OF 13) (4.2X1.41 TAPPING) (SPL) (3.430)	98-99	Y	7	25536302
13.	5-A16	10.230	BRACKET, I/P CTR SUPT (INCLS 12)	98	Y	1	10409654
	5-A16	10.230	BRACKET, I/P CTR SUPT (INCLS 12)	99	Y	1	10433229
14.		N.S.	STUD, I/P ACSRY TR-TO TUNNEL				
15.		8.900	SCREW, M6X1X30, 11 THD, 12.5 OD, 4.8, 6047M, P-PT (I/P CTR SUPT (AT I/P TIE BAR))	98-99		2	11508128
16.	5-A17	10.252	PLATE, I/P ACSRY TR (INCLS 17, 21, 25, 28)	98-99	Y	1	10407815
17.	5-N17	12.009	RETAINER, I/P ASHTRAY (PART OF 16) (10.242)	98-99	Y	2	10401217
18.	5-A17	10.252	GRILLE, I/P ACSRY TR PLT	98-99	Y	1	10268306
19.	5-A17	10.252	BOLT, I/P ACSRY TR PLT	98-99	Y	3	10400761
20.	5-N17	12.009	ASHTRAY, I/P (INCLS 48)	98-99	Y	1	10247681
21.	5-A18	10.260	RETAINER, I/P CUP HLDR (PART OF 16) (10.242)	98-99	Y	2	10401217
22.		8.917	NUT, HEX W/CON WA 6X1X5.5 16-OD ZP 9 (I/P ACSRY TR PLT)	98-99		2	11517293
23.	5-A16	10.230	INSULATOR, I/P (BLACK)	98-99	Y (19I)	RH	10409462
	5-A16	10.230	INSULATOR, I/P (PEWTER)	98-99	Y (92I)	RH	10409463
	5-A16	10.230	INSULATOR, I/P (RED)	98-99	Y07-67 (94I)	RH	10406526
	5-A16	10.230	INSULATOR, I/P (OAK)	98-99	Y07-67 (67I)	RH	10409465

cardiagn.com

							1Y10-036
24.	5-A16	10.230	RETAINER, I/P INSL (PEWTER) (14.640)	98-99	Y	LH	10279623
	5-A16	10.230	RETAINER, I/P INSL (PEWTER) (14.640)	98-99	Y	RH	10279623
25.	5-A18	10.260	MAT, I/P CUP HLDR (PART OF 16)	98-99	Y	1	10274116
26.	5-N15	9.709	LIGHTER, CIG (BLACK) (SM) (CASCO)	98	Y	1	11516141
	5-N15	9.709	LIGHTER, CIG (BLACK) (CASCO) (W/LARGE, PLASTIC KNOB)	99	Y	1	11516140
27.	5-N15	9.709	HOUSING, C/LTR (MATES W/CONN 12085504, (CASCO) 1-PIN CONN)	98-99	Y	1	11516142
28.	5-A18	10.260	DOOR, I/P CUP HLDR (PART OF 16)	98-99	Y	1	10268305
29.		8.921	NUT, METRIC PUSH-ON BOLT RETAINING SPRING (I/P INSL)	98-99		1	10009923
30.	5-A16	10.230	INSULATOR, I/P	98-99	Y	LH	10421513
31.	5-N15	9.709	RETAINER, C/LTR HSG (CASCO)	98-99	Y	1	11516144
32.	5-A16	10.230	BAR, I/P TIE (#47)	98-99	Y	1	10425866
33.	5-A16	10.230	NUT, I/P LWR TIE BAR (4.665)	98-99	Y	10	10281487
34.		8.977	BOLT, HWH, M4.2X1.41X20, 7.8 OD, ST, 6172M, ZN BR, TAP, DRILL PT (IGN & START SW)	98-99		1	11513568
35.	5-M9	2.188	HOUSING, IGN & START SW (INCLS 36)	98-99	Y	1	10404727
36.		8.915	NUT, M6X1, 10MM HOLE, 12.9 OD, 4345M (PART OF 35)	98-99		AR	11516763
		8.915	NUT, M6X1, 10MM HOLE, 12.9 OD, 4345M (PART OF 35)	98-99		2	11516763
37.		8.900	BOLT/SCREW, HEX W/FL WA 17 OD, M6X1X20, 9.8, 4345M, DOG PT (I/P CTR SUPT BRKT) (POSN #1)	98-99		2	11515704
38.		8.900	SCREW, M6X1X30, 11 THD, 12.5 OD, 4.8, 6047M, P-PT (I/P CTR SUPT AT FLR PNL)	98-99		2	11508128
39.	5-A16	10.230	BRACKET, I/P CTR SUPT	98-99	Y	1	10409133
40.		8.921	NUT, U TYPE, MULTI THD, PREV TORQ, M4.2X1.41TAP, 8.1REACH, 0.65-3.80 PNLS 1065 PZOR (I/P LWR BRKT) (AC-DELCO #11513599)	98-99		1	11513599
41.		8.977	SCREW, HEX W/FL WA M4.2X2.25X20 TAP POR (I/P CTR SUPT BRKT) (POSN #2)	98-99		1	11508443
42.		8.977	BOLT, HEX W/WA, M6X1X35, 9.8, POR, 24 OD, ABPT (I/P TIE BAR)	98-99		2	11513947
43.	5-A16	10.230	SPACER, I/P (7.832)	98-99	Y	AR	10149281
44.	5-A19	10.266	SPRING, I/P COMPT DR LK CYL TUMB (PART OF 8) (SNAP IN) (10.268)	98-99	Y	4	6259315
	5-A19	10.266	SPRING, I/P COMPT DR LK CYL ANTI-ROTATION TUMB (PART OF 8) (ANTI-RATTLE)	98	Y	1	20496065
	5-A19	10.266	SPRING, I/P COMPT DR LK CYL ANTI-ROTATION TUMB (PART OF 8) (ANTI-RATTLE)	99	Y	1	20496065

cardiagn.com

							1Y10-036
45.	5-A19	10.266	TUMBLER, I/P COMPT DR LK CYL (PART OF 8) (#1)	98-99	Y	AR	12522877
	5-A19	10.266	TUMBLER, I/P COMPT DR LK CYL (PART OF 8) (#2)	98-99	Y	AR	12522878
	5-A19	10.266	TUMBLER, I/P COMPT DR LK CYL (PART OF 8) (#3)	98-99	Y	AR	12522879
	5-A19	10.266	TUMBLER, I/P COMPT DR LK CYL (PART OF 8) (#4)	98-99	Y	AR	12522880
	5-A19	10.266	TUMBLER, I/P COMPT DR LK CYL ANTI-ROTATION (PART OF 8)	98-99	Y	1	12522881
46.	5-A19	10.266	LOCK, I/P COMPT DR (PART OF 1) (BLACK)	98-99	Y (19I)	1	22658999
	5-A19	10.266	LOCK, I/P COMPT DR (PART OF 1) (PEWTER)	98-99	Y07-67 (92I)	1	22659000
	5-A19	10.266	LOCK, I/P COMPT DR (PART OF 1) (RED)	98-99	Y07-67 (94I)	1	22659001
	5-A19	10.266	LOCK, I/P COMPT DR (PART OF 1) (CAMEL)	98-99	Y07-67 (67I)	1	22659002
47.	5-A19	10.263	BUMPER, I/P COMPT (PART OF 1)	98-99	Y	1	10280061
48.		N.S.	COVER, I/P ASHTRAY (PART OF 20)		.....		

RPO DEFINITIONS
19I – INTERIOR TRIM,BLACK
67I – INTERIOR TRIM,CAMEL
92I – INTERIOR TRIM SHALE/PEWTER
94I – INTERIOR TRIM FIRETHORN RED (97)

cardiagn.com

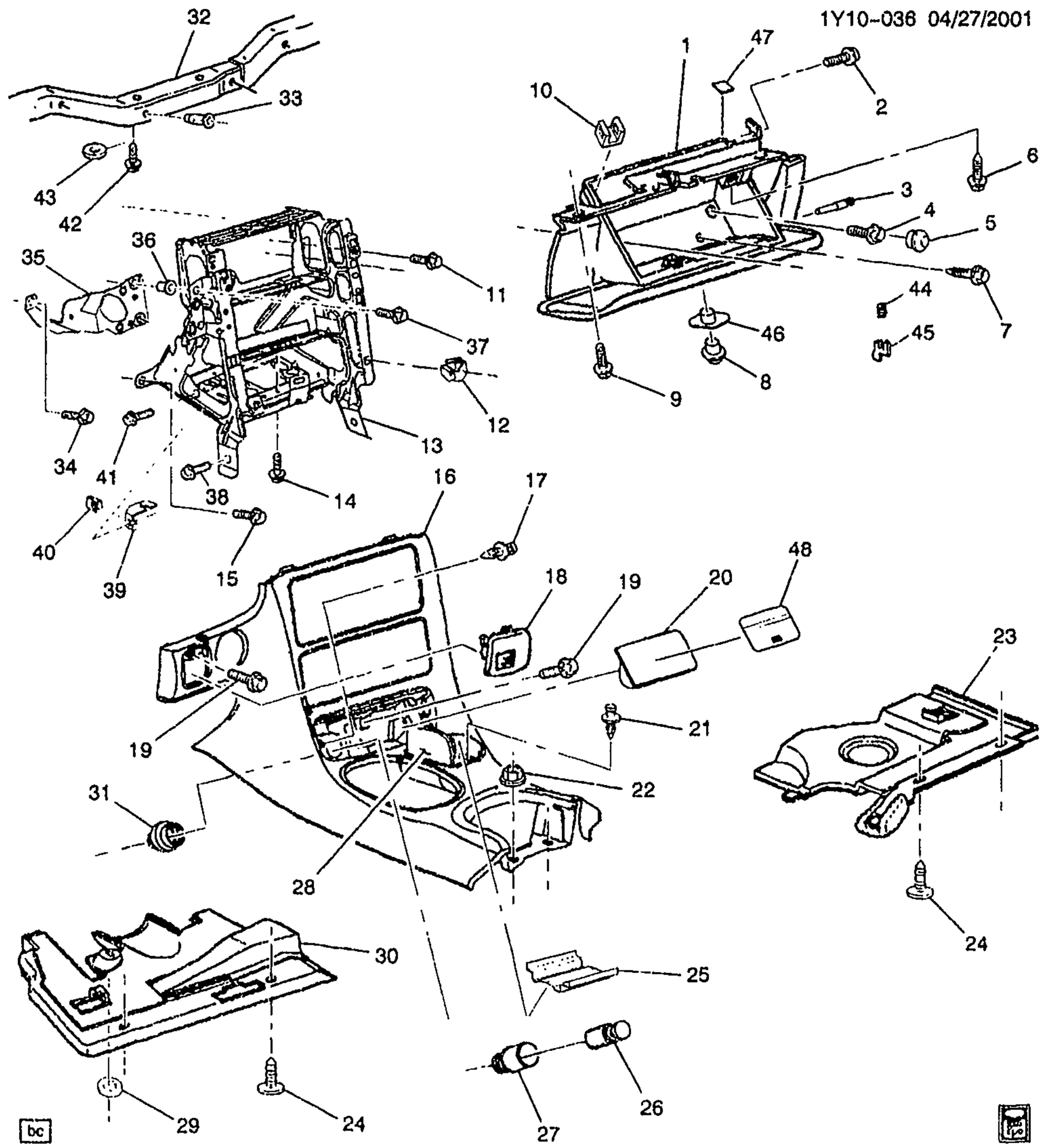

1998-2002 Y INSTRUMENT PANEL PART 2 (COMPARTMENT/INSULATORS/TRIM PLATES)

1.	5-A18	10.260	COMPARTMENT, I/P (W/DR) (INCLS 3, 10)	98	Y (94I)	1	10416644
	5-A18	10.260	COMPARTMENT, I/P (W/DR) (INCLS 3, 10) (BLACK)	98-99	Y (19I)	1	10437318
	5-A18	10.260	COMPARTMENT, I/P (W/DR) (INCLS 3, 10) (PEWTER)	98-99	Y07-67 (92I)	1	10437319

cardiagn.com

						1Y10-0361
5-A18	10.260	COMPARTMENT, I/P (W/DR) (INCLS 3, 10)	99	Y07-67 (94I)	1	10416644
5-A18	10.260	COMPARTMENT, I/P (W/DR) (INCLS 3, 10) (RED) (W/O MANUAL PSIR SUPPRESSION SWITCH 2ND DES SEE 10437316)	00	Y07-67 (C88, 70I) (1ST DES)	1	10408529
5-A18	10.260	COMPARTMENT, I/P (W/DR) (INCLS 3, 10) (BLACK) (W/MANUAL PSIR SUPPRESSION SWITCH, FOR 1 DES SEE 10437318)	00	Y (19I) (EXC C88) (2ND DES)	1	10437313
5-A18	10.260	COMPARTMENT, I/P (W/DR) (INCLS 3, 10) (OAK) (W/MANUAL PSIR SUPPRESSION SWITCH, FOR 1ST DES SEE 10437320) ...	00	Y07-67 (67I) (EXC C88) (2ND DES)	1	10437315
5-A18	10.260	COMPARTMENT, I/P (W/DR) (INCLS 3, 10) (RED) (W/MANUAL PSIR SUPPRESSION SWITCH 1ST DES SEE 10437321)	00	Y07--67 (70I) (EXC C88) (2ND DES)	1	10437316
5-A18	10.260	COMPARTMENT, I/P (W/DR) (INCLS 3, 10) (BLACK) (W/O MANUAL PSIR SUPPRESSION SWITCH, FOR 2ND DES SEE 10437313)	00	Y (C88, 19I) (1ST DES) .	1	10437318
5-A18	10.260	COMPARTMENT, I/P (W/DR) (INCLS 3, 10) (PEWTER) (W/O MANUAL PSIR SUPPRESSION SWITCH, FOR 2ND DES SEE 10437314)	00	Y07-67 (C88, 19I) (1ST DES)	1	10437319
5-A18	10.260	COMPARTMENT, I/P (W/DR) (INCLS 3, 10) (OAK) (W/O MANUAL PSIR SUPPRESSION SWITCH, FOR 2ND DES SEE 10437315)	00	Y07-67 (C88, 67I) (1ST DES)	1	10437320
5-A18	10.260	COMPARTMENT, I/P (W/DR) (INCLS 3, 10) (RED)	01-02	Y07-67 (C88, 70I)	1	10408529
5-A18	10.260	COMPARTMENT, I/P (W/DR) (INCLS 3, 10) (BLACK)	01-02	Y (19I) (EXC C88)	1	10437313
5-A18	10.260	COMPARTMENT, I/P (W/DR) (INCLS 3, 10) (OAK)	01-02	Y07-67 (67I) (EXC C88)	1	10437315
5-A18	10.260	COMPARTMENT, I/P (W/DR) (INCLS 3, 10) (RED)	01-02	Y (70I) (EXC C88)	1	10437316
5-A18	10.260	COMPARTMENT, I/P (W/DR) (INCLS 3, 10) (PEWTER)	01-02	Y (C88, 92I)	1	10437319
5-A18	10.260	COMPARTMENT, I/P (W/DR) (INCLS 3, 10) (OAK)	01-02	Y (C88, 67I)	1	10437320
5-A18	10.260	COMPARTMENT, I/P (W/DR) (INCLS 3, 10) (BLACK)	01-02	Y (C88, 19I)	1	10437318
5-A18	10.260	COMPARTMENT, I/P (W/DR) (REMOVE SNAP COVER IF PSIR SUPRESSION SWITCH IS PRESENT.) (INCLS 3, 10) (PEWTER) (W/MANUAL PSIR SUPPRESSION SWITCH, FOR 1ST DES SEE 10437319)	00	Y07-67 (92I) (EXC C88) (2ND DES)	1	10437319

cardiagn.com

							1Y10-0361
	5-A18	10.260	COMPARTMENT, I/P (W/DR) (REMOVE SNAP COVER IF PSIR SUPRESSION SWITCH IS PRESENT.) (INCLS 3, 10) (PEWTER)	01-02	Y07-67 (92I) (EXC C88)	1	10437319
2.		8.977	BOLT, HWH, M4.2X1.41X20, 7.8 OD, ST, 6172M, ZN BR, TAP, DRILL PT (AT PASS INFL RST I/P MDL BRKT)	98-02		1	11513568
3.	5-A19	10.262	PIN, I/P COMPT DR HGE (PART OF 1)	98-02	Y	2	10280060
4.		8.900	SCREW, M6X1X30, 11 THD, 12.5 OD, 4.8, 6047M, P-PT (TO LWR TIE BAR-POSN #1)	98-02		2	11508128
5.	5-A18	10.256	PLUG, I/P COMPT ACC HOLE (34.8 OD 2.5 THK) (POLYETHYLENE) (8.010)	98-02	Y	2	22539445
6.		8.977	SCREW, HEX W/FL WA M4.2X2.25X20 TAP POR (UPR)	98-02		4	11508443
7.		8.900	BOLT, HEX W/CON WA M6X1X40 9.8 PC AC PT17 OD (LWR)	98-02		2	11503827
8.	5-A19	10.266	CYLINDER, I/P COMPT DR LK (UNCODED) (INCLS 44, 45)	98-02	Y	1	12534394
9.		8.977	SCREW, HEX W/FL WA M4.2X2.25X20 TAP POR (TO PAD ASM-POSN #4)	98-02		3	11508443
10.	5-A19	10.263	BUMPER, I/P COMPT DR STOP (PART OF 1)	98-02	Y	2	10285822
11.		8.900	BOLT/SCREW, HEX W/FL WA 17 OD, M6X1X20, 9.8, 4345M, DOG PT (POSN #2 UPR/POSN #3 LWR) (I/P CTR SUPT AT I/P PASS KNEE BOLSTER BRKT)	98-02		2	11515704
12.	5-A16	10.230	NUT, I/P CTR SUPT BRKT (PART OF 13) (4.2X1.41 TAPPING) (SPL) (3.430)	98-02	Y	7	25536302
13.	5-A16	10.230	BRACKET, I/P CTR SUPT (INCLS 12)	98	Y	1	10409654
	5-A16	10.230	BRACKET, I/P CTR SUPT (INCLS 12)	99-02	Y	1	10433229
14.		N.S.	STUD, I/P ACSRY TR-TO TUNNEL				
15.		8.900	SCREW, M6X1X30, 11 THD, 12.5 OD, 4.8, 6047M, P-PT (I/P CTR SUPT (AT I/P TIE BAR))	98--02		2	11508128
16.	5-A17	10.252	PLATE, I/P ACSRY TR (INCLS 17, 21, 25, 28)	98-02	Y	1	10407815
17.	5-N17	12.009	RETAINER, I/P ASHTRAY (PART OF 16) (10.242)	98-02	Y	2	10401217
18.	5-A17	10.252	GRILLE, I/P ACSRY TR PLT	98-02	Y	1	10268306
19.	5-A17	10.252	BOLT, I/P ACSRY TR PLT	98-02	Y	3	10400761
20.	5-N17	12.009	ASHTRAY, I/P	98-02	Y	1	10247681
21.	5-A18	10.260	RETAINER, I/P CUP HLDR (PART OF 16) (10.242)	98-02	Y	2	10401217
22.		8.917	NUT, HEX W/CON WA 6X1X5.5 16-OD ZP 9 (I/P ACSRY TR PLT)	98-02		2	11517293
23.	5-A16	10.230	INSULATOR, I/P (BLACK)	98-02	Y (19I)	RH	10409462
	5-A16	10.230	INSULATOR, I/P (PEWTER)	98-02	Y (92I)	RH	10409463

cardiagn.com

							1Y10-0361
	5-A16	10.230	INSULATOR, I/P (RED)	98-99	Y07-67 (94I)	RH	10406526
	5-A16	10.230	INSULATOR, I/P (OAK)	98-02	Y07-67 (67I)	RH	10409465
	5-A16	10.230	INSULATOR, I/P (RED)	00	Y07-67 (70I)	RH	10409466
	5-A16	10.230	INSULATOR, I/P (RED)	01-02	Y (70I)	RH	10409466
24.	5-A16	10.230	RETAINER, I/P INSL (PEWTER) (14.640)	98-02	Y	LH	10279623
	5-A16	10.230	RETAINER, I/P INSL (PEWTER) (14.640)	98-02	Y	RH	10279623
25.	5-A18	10.260	MAT, I/P CUP HLDR (PART OF 16)	98-02	Y	1	10274116
26.	5-N15	9.709	LIGHTER, CIG (BLACK) (SM) (CASCO)	98	Y	1	11516141
	5-N15	9.709	LIGHTER, CIG (BLACK) (CASCO) (W/LARGE, PLASTIC KNOB)	99-02	Y	1	11516140
27.	5-N15	9.709	HOUSING, C/LTR (MATES W/CONN 12085504, (CASCO) 1-PIN CONN)	98-02	Y	1	11516142
28.	5-A18	10.260	DOOR, I/P CUP HLDR (PART OF 16)	98-02	Y	1	10268305
29.		8.921	NUT, METRIC PUSH-ON BOLT RETAINING SPRING (I/P INSL) ...	98-02	.....	1	10009923
30.	5-A16	10.230	INSULATOR, I/P	98-02	Y	LH	10421513
31.	5-N15	9.709	RETAINER, C/LTR HSG (CASCO)	98-02	Y	1	11516144
32.	5-A16	10.230	BAR, I/P TIE (#47)	98-02	Y	1	10425866
33.	5-A16	10.230	NUT, I/P LWR TIE BAR (4.665) ...	98-02	Y	10	10281487
34.		8.977	BOLT, HWH, M4.2X1.41X20, 7.8 OD, ST, 6172M, ZN BR, TAP, DRILL PT (IGN & START SW)	98-02	.....	1	11513568
35.	5-M9	2.188	HOUSING, IGN & START SW (INCLS 36)	98-02	Y	1	10404727
36.	5-M9	2.188	NUT, IGN & START SW (PART OF 35) (M6X1.0 ITR "D" THD) (10.512)	98-02	Y	2	10410398
37.		8.900	BOLT/SCREW, HEX W/FL WA 17 OD, M6X1X20, 9.8, 4345M, DOG PT (I/P CTR SUPT BRKT) (POSN #1)	98-02	.....	2	11515704
38.		8.900	SCREW, M6X1X30, 11 THD, 12.5 OD, 4.8, 6047M, P-PT (I/P CTR SUPT AT FLR PNL)	98-02	.....	2	11508128
39.	5-A16	10.230	BRACKET, I/P CTR SUPT	98-02	Y	1	10409133
40.		8.921	NUT, U TYPE, MULTI THD, PREV TORQ, M4.2X1.41TAP, 8.1REACH, 0.65-3.80 PNLS 1065 PZOR (I/P LWR BRKT) (AC-DELCO #11513599)	98-02	.....	1	11513599
41.		8.977	SCREW, HEX W/FL WA M4.2X2.25X20 TAP POR (I/P CTR SUPT BRKT) (POSN #2)	98-02	.....	1	11508443
42.		8.977	BOLT, HEX W/WA, M6X1X35, 9.8, POR, 24 OD, ABPT (I/P TIE BAR) .	98-02	.....	2	11513947
43.	5-A16	10.230	SPACER, I/P (7.832)	98-02	Y	AR	10149281
44.	5-N8	7.440	ACCELEROMETER, VEH LATL ..	98-99	Y (JL4)	1	25678191
	5-N8	7.440	ACCELEROMETER, VEH LATL ..	00-01	Y (JL4)	1	25697709
	5-N8	7.440	ACCELEROMETER, VEH LATL ..	02	Y	1	25697709
45.		8.915	NUT, M4X0.7	98-02	.....	AR	11505569

cardiagn.com

							1Y10-0361
46.	5-N7	4.710	CONNECTOR, SEN-VEH LATL (3-WAY F) (2.170)	98-02	Y	1	12146121
	5-N7	4.710	CONNECTOR, SEN-VEH LATL (3-WAY F) (2.170)	02	Y (M30, CJ2, N37) (EXC T89)	1	12146121
47.	5-N8	7.440	BRACKET, VEH LATL ACCLRM ..	98-02	Y (JL4)	1	10290470
48.	5-A19	10.266	SPRING, I/P COMPT DR LK CYL TUMB (PART OF 8) (SNAP IN) (10.268)	98-02	Y	4	6259315
	5-A19	10.266	SPRING, I/P COMPT DR LK CYL ANTI-ROTATION TUMB (PART OF 8) (ANTI-RATTLE)	98	Y	1	20496065
	5-A19	10.266	SPRING, I/P COMPT DR LK CYL ANTI-ROTATION TUMB (PART OF 8) (ANTI-RATTLE)	99-02	Y	1	20496065
49.	5-A19	10.266	TUMBLER, I/P COMPT DR LK CYL (PART OF 8) (#1)	98-02	Y	AR	12522877
	5-A19	10.266	TUMBLER, I/P COMPT DR LK CYL (PART OF 8) (#2)	98-02	Y	AR	12522878
	5-A19	10.266	TUMBLER, I/P COMPT DR LK CYL (PART OF 8) (#3)	98-02	Y	AR	12522879
	5-A19	10.266	TUMBLER, I/P COMPT DR LK CYL (PART OF 8) (#4)	98-02	Y	AR	12522880
	5-A19	10.266	TUMBLER, I/P COMPT DR LK CYL ANTI-ROTATION (PART OF 8)	98-02	Y	1	12522881

RPO DEFINITIONS
CJ2 – HVAC SYSTEM AIR CONDITIONER FRT, AUTO TEMP CONT, AUX TEMP CONT
C88 – SWITCH INFL RST I/P MDL MAN SUPPRESSION -- DELETE
JL4 – CONTROL ACTIVE BRAKE
M30 – TRANSMISSION,AUTOMATIC 4 SPEED,4L60E,ELECTRONIC
N37 – STEERING COLUMN,TILT AND TELESCOPING
T89 – LAMP,TAIL AND STOP(EXPORT)
19I – INTERIOR TRIM,BLACK
67I – INTERIOR TRIM,CAMEL
70I – INTERIOR TRIM,TORCH RED
92I – INTERIOR TRIM SHALE/PEWTER
94I – INTERIOR TRIM FIRETHORN RED (97)

cardiagn.com

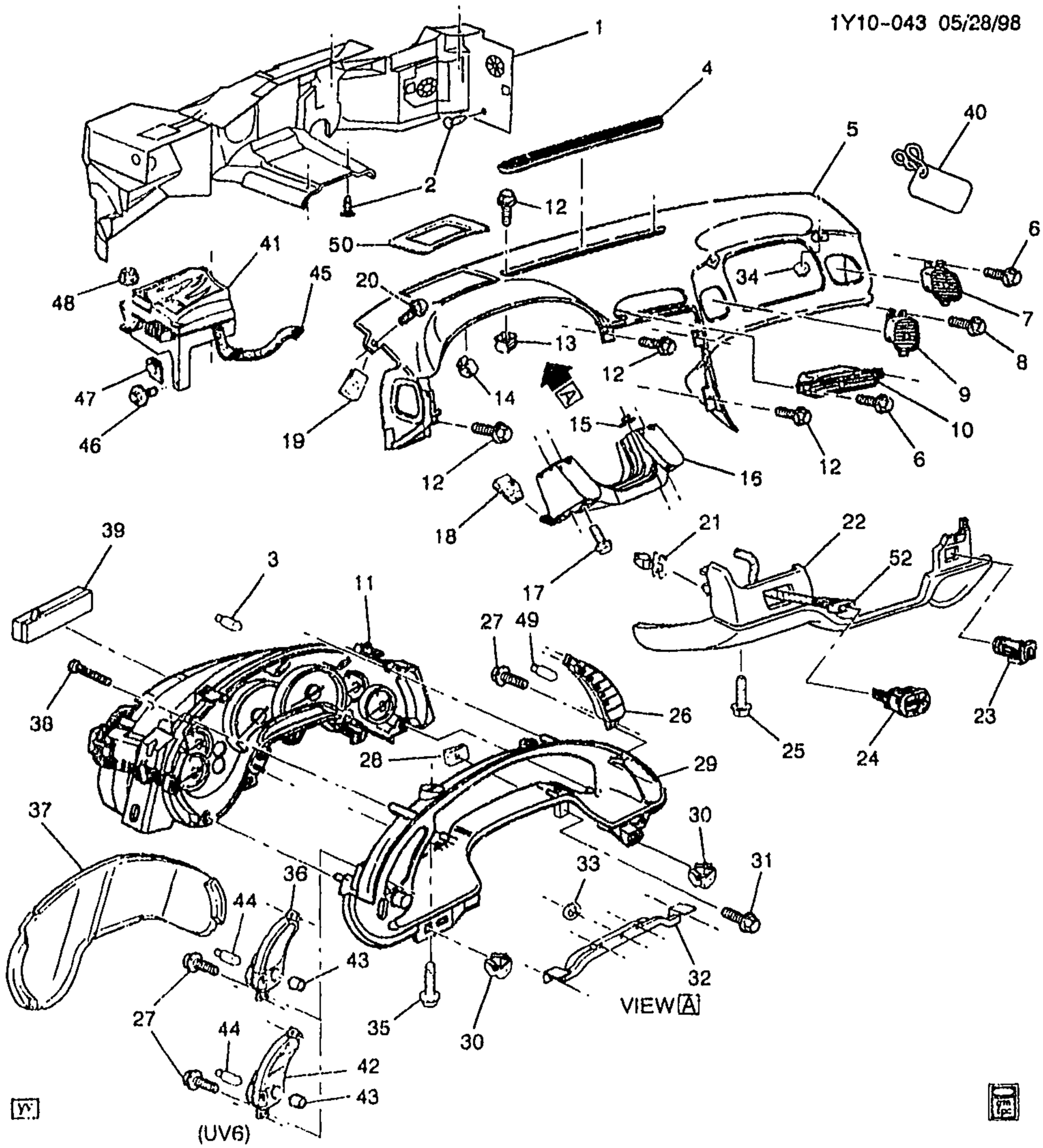

1999-2002 Y07-67 INSTRUMENT PANEL PART 1 (TRIM PAD/PANELS/CLUSTER)

1.	5-N21	12.804	INSULATOR, DA PNL	99-02	Y	1	10433334
2.		8.950	RETAINER, FITS .250 HOLE, 1.01LG.700-OD NYLON BLACK (DA PNL INSL)	99-02	.....	5	10121502
3.	5-N17	0.744	BULB, INST CSTR (PART OF 11) (AC-DELCO #12533422)	99-02	Y	1	12533422

cardiagn.com

							1Y10-043
4.	5-N17	9.779	GRILLE, W/S DEFR NOZ (BLACK)	99-02	Y (CJ2)	1	10400366
	5-N17	9.779	GRILLE, W/S DEFR NOZ (BLACK)	99-02	Y (C60)	1	10400367
5.	5-A16	10.235	PAD, I/P UPR TR (PAD ASM) (CPS) (ALSO INCLS 7, 10, 14, 19, 40) (INCLS BEZELS, DUCT & OUTLETS) (BLACK)	99-02	Y	1	10303149
	5-A16	10.235	PAD, I/P UPR TR (PART OF PAD ASM) (LESS BEZELS, DUCT & OUTLETS) (BLACK)	99-02	Y	1	10443975
	5-N17	9.768	BEZEL, DRVR INFO DISPLAY (INCLS BEZEL)	99-02	Y	1	10425223
	5-N17	9.786	DUCT, AIR DISTR	99-02	Y	1	10229412
		8.900	BOLT, HWH, M4.2X1.41X18, 12.5 OD, 6010M, PS (AIR DISTR DUCT) (8.977)	99-02		1	15714276
		8.917	NUT, HEX W/CON WA M6X1X7, 9 ZC (I/P ASST HDL) (8.915)	99-02		2	11515741
6.		8.977	SCREW, HEX W/FL WA HI-LO TAP M4.2X1.41X16, 8-OD, BTHL PT, FLTD HRD, FL (I/P OTR AIR OTLT)	99-02		6	11508917
		8.929	WASHER, FL 7/32X1/2X5/8 1050 CAD HARD (I/P OTR AIR OTLT)	99-02		6	2077521
7.	5-N11	9.262	OUTLET, I/P CTR AIR (W/UV6) (PART OF 5) (FAR RIGHT POSITION)	99-02	Y07-67	RH	10406516
8.		8.977	SCREW, HEX W/FL WA HI-LO TAP M4.2X1.41X16, 8-OD, BTHL PT, FLTD HRD, FL (I/P CTR AIR OTLT)	99-02		3	11508917
		8.929	WASHER, FL 7/32X1/2X5/8 1050 CAD HARD (I/P OTR AIR OTLT)	99-02		6	2077521
9.	5-N11	9.262	OUTLET, I/P CTR AIR	99-02	Y	RH	10406515
10.	5-N11	9.262	OUTLET, I/P CTR AIR (PART OF 5)	99-02	Y	LH	10406514
11.		N.S.	CLUSTER, INST (INCLS 3, 29, 32, 37, 39) (CLUSTERS SOLD THRU ACD REPAIR CENTERS)				
12.		8.977	SCREW, HEX W/FL WA M4.2X2.25X20 TAP POR (I/P UPR TR PAD (AT PLNM PNL))	99-02		7	11508443
13.	5-A16	10.235	NUT, I/P UPR TR PAD (4.2X1.41 TAPPING) (SPL) (3.430)	99-02	Y	2	25536302
14.	5-A16	10.235	NUT, I/P UPR TR PAD (TO I/P) (PART OF 5) (M4.2X1.41) (PUSH-IN FOR 12MM SQ HOLE) (10.252)	99-02	Y	4	17988488
15.	5-A16	10.235	NUT, I/P DRVR KNEE BOLS BRKT (4.2X1.41 TAPPING) (SPL) (3.430)	99-02	Y	4	25536302
16.	5-A16	10.235	BRACKET, I/P DRVR KNEE BOLS (10.230)	99-02	Y	1	10289379
17.		8.977	SCREW, HEX W/FL WA M4.2X2.25X20 TAP POR (I/P DRVR KNEE BOLS)	99-02		4	11508443

cardiagn.com

							1Y10-043
18.		8.921	NUT, U TYPE, MULTI THD, PREV TORQ, M4.2X1.41TAP, 8.1REACH, 0.65-3.80 PNLS 1065 PZOR (I/P DRVR KNEE BOLS) (AC-DELCO #11513599)	99-02		2	11513599
19.		8.921	NUT, U TYPE, MULTI THD, PREV TORQ, M4.2X1.41TAP, 8.1REACH, 0.65-3.80 PNLS 1065 PZOR (PART OF 5) (AC-DELCO #11513599)	99-02		2	11513599
20.		8.977	BOLT-SCREW, M4.2X1.41X13, 5.4 THD, 12.5 OD, GM6172M, GM6138M (I/P UPR TR PAD (AT FRT S/D H/PLR))	99-02		2	15714277
21.	5-A16	10.235	RETAINER, I/P DRVR KNEE BOLS PNL (PUSH IN)	99-02	Y	2	21040288
22.	5-A16	10.235	PANEL, I/P DRVR KNEE BOLS (BLACK)	99-02	Y (19I)	1	10426429
	5-A16	10.235	PANEL, I/P DRVR KNEE BOLS (PEWTER)	99-02	Y07-67 (92I)	1	10426430
	5-A16	10.235	PANEL, I/P DRVR KNEE BOLS (CAMEL)	99-02	Y07-67 (67I)	1	10426432
	5-A16	10.235	PANEL, I/P DRVR KNEE BOLS (RED)	99	Y07-67 (94I)	1	10426431
	5-A16	10.235	PANEL, I/P DRVR KNEE BOLS (RED)	00	Y07-67 (70I)	1	10426433
	5-A16	10.235	PANEL, I/P DRVR KNEE BOLS (RED)	01-02	Y (70I)	1	10426433
23.	5-N12	9.275	SENSOR, I/S AIR TEMP (AC-DELCO #15-72496)	99-02	Y	1	16267411
24.	5-M26	2.485	SWITCH, FOG LP (INCLUDES HATCH RELEASE SWITCH)	99-02	Y (T96) (EXC VD1)	1	12135155
		8.991	BULB, FRT FOG LP IND LP (.5CP) (9.279) (AC-DELCO #16056613)	99-02	Y	1	16056613
	5-M26	2.485	SWITCH, FOG LP	99-02	Y (VD1) (EXPORT)	1	12135156
25.		8.977	SCREW, PAN HD TORX W/FL WA M4.2X1.41X20303 BLK (I/P DRVR KNEE BOLS PNL)	99-02		3	11508561
26.	5-N17	9.768	SWITCH, DRVR INFO DISPLAY (AC-DELCO #12135152)	99-02	Y (U52)	1	12135152
27.	5-A17	10.252	BOLT, I/P ACSRY BZL (M4.2X1.41X16 TORX RND HD) (16.069)	99-02	Y	4	15659231
28.		8.921	NUT, U TYPE, MULTI THD, PREV TORQ, M4.2X1.41TAP, 8.1REACH, 0.65-3.80 PNLS 1065 PZOR (INST CSTR) (POSN #1) (AC-DELCO #11513599)	99-02		2	11513599
29.	5-N17	9.743	BEZEL, I/P CSTR TR PLT (PART OF 11)	99-02	Y (U52)	1	10417123
30.	5-N17	9.735	NUT, INST CSTR (POSN #2) (4.2X1.41 TAPPING) (SPL) (3.430)	99-02	Y	2	25536302
31.		8.977	BOLT, HWH, M4.2X1.41X20, 7.8 OD, ST, 6172M, ZN BR, TAP, DRILL PT (INST CSTR)	99-02		2	11513568
32.		N.S.	SEAL, I/P STRG COL OPG (PART OF 11)				

cardiagn.com

							1Y10-043
33.		8.921	NUT-PUSH ON SPRING FOR .153 TO .159 INCH DIA STUD, .70 OD, .35 THK, SAE1050 CRB .SPR .STL, PC (INST CSTR) (AC-DELCO #11501937)	99-02	.....	5	11501937
34.		8.917	NUT, HFH 6X1X7 SELF LK 14.2-OD (9) 7111M ALL MET PREV TORQ (I/P ASST HDL)	99-02	.....	2	11516075
35.		8.977	SCREW, PAN HD W/WA, TORX, M4.2X1.41X20, NO (INST CSTR LENS)	99-02	.....	2	11515439
36.	5-M27	2.490	SWITCH, I/P LP DIMR (AC-DELCO #D1577E)	99-01	Y	1	12135149
	5-M27	2.490	SWITCH, I/P LP DIMR (AC-DELCO #D1577E)	02	Y (EXC UV6)	1	12135149
37.	5-N17	9.748	LENS, INST CSTR (PART OF 11) (AC-DELCO #12533420)	99-02	Y (U52)	1	12533420
38.		8.977	SCREW, PAN HD C/R TAP M4.2X1.41X30 AB POR (I/P CSTR TR PLT BZL) (8.913)	99-02	.....	6	11517072
39.	5-C17	11.927	INVERTER, LUMINESCENT LP (PART OF 11)	99	Y	1	12533421
	5-C17	11.927	INVERTER, LUMINESCENT LP (PART OF 11)	00-02	Y (EXC UV6)	1	12533421
	5-C17	11.927	INVERTER, LUMINESCENT LP (PART OF 11)	02	YY37 (U52)	1	12533421
40.	5-N9	8.808	TAG, INFL RST I/P MDL CAUTION (PART OF 5)	99-00	Y	1	15002618
	5-N9	8.808	TAG, INFL RST I/P MDL CAUTION (PART OF 5)	01-02	Y	1	10447122
41.	5-N16	9.715	DISPLAY, INST CSTR HEAD UP (HUD ALONE) (AC-DELCO #10279814)	99-00	Y (UV6)	1	10279814
	5-N16	9.715	DISPLAY, INST CSTR HEAD UP (HUD ALONE) (AC-DELCO #10279814)	01-02	Y07-67 (UV6)	1	10279814
	5-N16	9.715	DISPLAY, INST CSTR HEAD UP (AC-DELCO #10316475)	02	YY37	1	10316475
42.	5-N16	9.715	SWITCH, INST CSTR HEAD UP DISPLAY DIMR (AC-DELCO #12198648)	99-00	Y (UV6)	1	12198648
	5-N16	9.715	SWITCH, INST CSTR HEAD UP DISPLAY DIMR (AC-DELCO #12198648)	01-02	Y07-67 (UV6)	1	12198648
43.	5-M27	2.490	KNOB, I/P & INTR LF D/SW	99-02	Y	1	12198636
44.		8.991	BULB, I/P LP DIMR SW (W/H.U.D., W/O BOOT) (2.490) ..	99-02	Y (UV6)	3	12198644
		8.991	BULB, I/P LP DIMR SW (W/O BOOT) (2.490)	99-02	Y (EXC UV6)	1	12198644
45.		N.S.	PIGTAIL CONNECTOR (TO CLUSTER)		.....	1	
46.		8.977	BOLT-HEX W/ WASHER, 4.2X1.41X25, 17 OD, 6010M, NO (INST CSTR HEAD UP DISPLAY) .	99-02	.....	1	11515429

cardiagn.com

							1Y10-043
47.		8.921	NUT, U TYPE, MULTI THD, PREV TORQ, M4.2X1.41TAP, 8.1REACH, 0.65-3.80 PNLS 1065 PZOR (INST CSTR HEAD UP DISPLAY BRKT) (AC-DELCO #11513599)	99-02	.....	1	11513599
48.		8.917	NUT, HEX W/CON WA M6X1X5.5 (9) 7111M 16-OD (INST CSTR HEAD UP DISPLAY)	99-02	.....	2	11514517
49.	5-N17	9.769	BULB, DRVR INFO DISPLAY SW (W/O SOCKET) (5CP) (9.2/9) (AC-DELCO #16056613)	99-02	Y (U52)	3	16056613
50.	5-N17	9.768	BEZEL, DRVR INFO DISPLAY (INCLS BEZEL)	99-02	Y	1	10425223
52.	5-M10	2.480	HARNESS, I/P WRG (MAY REQUIRE 12450028 I/P COMPT LP & 12102616 PWR RCPT CONN)	99	Y07 (M30, CJ2, JL4) (EXC N37, T89)	1	12190424
	5-M10	2.480	HARNESS, I/P WRG (MAY REQUIRE 12450028 I/P COMPT LP & 12102616 PWR RCPT CONN)	99-00	Y07 (M30, CJ2, JL4, N37) (EXC T89)	1	12190424
	5-M10	2.480	HARNESS, I/P WRG (MAY REQUIRE 12450028 I/P COMPT LP & 12102616 PWR RCPT CONN)	99-00	Y07 (M30, C60, JL4) (EXC N37, T89)	1	12190427
	5-M10	2.480	HARNESS, I/P WRG (MAY REQUIRE 12450028 I/P COMPT LP & 12102616 PWR RCPT CONN)	99	Y07 (MM6, CJ2, JL4, N37) (EXC T89)	1	12190429
	5-M10	2.480	HARNESS, I/P WRG (MAY REQUIRE 12450028 I/P COMPT LP & 12102616 PWR RCPT CONN)	99-00	Y07 (MM6, C60, JL4) (EXC N37, T89)	1	12190432
	5-M10	2.480	HARNESS, I/P WRG (MAY REQUIRE 12450028 I/P COMPT LP & 12102616 PWR RCPT CONN)	99-00	Y07 (M30, CJ2, N37) (EXC JL4, T89)	1	12190434
	5-M10	2.480	HARNESS, I/P WRG (MAY REQUIRE 12450028 I/P COMPT LP & 12102616 PWR RCPT CONN)	99-00	Y07 (M30, C60) (EXC JL4, N37, T89)	1	12190437
	5-M10	2.480	HARNESS, I/P WRG (MAY REQUIRE 12450028 I/P COMPT LP & 12102616 PWR RCPT CONN)	99-00	Y07 (MM6, CJ2, N37) (EXC JL4, T89)	1	12190439
	5-M10	2.480	HARNESS, I/P WRG (MAY REQUIRE 12450028 I/P COMPT LP & 12102616 PWR RCPT CONN)	99-00	Y07 (MM6, C60) (EXC JL4, N37, T89)	1	12190442
	5-M10	2.480	HARNESS, I/P WRG (MAY REQUIRE 12450028 I/P COMPT LP & 12102616 PWR RCPT CONN)	99-00	Y67 (M30, CJ2, N37) (EXC T89)	1	12190444
	5-M10	2.480	HARNESS, I/P WRG (MAY REQUIRE 12450028 I/P COMPT LP & 12102616 PWR RCPT CONN)	99-00	Y67 (M30, C60) (EXC N37, T89)	1	12190447

cardiagn.com

						1Y10-043
5-M10	2.480	HARNESS, I/P WRG (MAY REQUIRE 12450028 I/P COMPT LP & 12102616 PWR RCPT CONN)	99-00	Y67 (MM6, CJ2, N37) (EXC T89)	1	12190449
5-M10	2.480	HARNESS, I/P WRG (MAY REQUIRE 12450028 I/P COMPT LP & 12102616 PWR RCPT CONN)	99-00	Y67 (MM6, C60) (EXC N37, T89)	1	12190452
5-M10	2.480	HARNESS, I/P WRG (INCLUDES PROVISIONS FOR MAN. SUPPRESSION SYS. INCLUDES HARN. INLINE P/DOOR) ..	00	Y07 (M30, CJ2, JL4, N37) (EXC T89)	1	10442559
5-M10	2.480	HARNESS, I/P WRG (INCLUDES PROVISIONS FOR MAN. SUPPRESSION SYS. INCLUDES HARN. INLINE P/DOOR) ..	00	Y07 (M30, C60, JL4) (EXC N37, T89)	1	10442562
5-M10	2.480	HARNESS, I/P WRG (INCLUDES PROVISIONS FOR MAN. SUPPRESSION SYS. INCLUDES HARN. INLINE P/DOOR) ..	00	Y07 (MM6, CJ2, JL4) (EXC T89)	1	10442563
5-M10	2.480	HARNESS, I/P WRG (INCLUDES PROVISIONS FOR MAN. SUPPRESSION SYS. INCLUDES HARN.INLINE P/DOOR) ..	00	Y07 (MM6, C60, JL4) (EXC N37)	1	10442566
5-M10	2.480	HARNESS, I/P WRG (INCLUDES PROVISIONS FOR MAN. SUPPRESSION SYS. INCLUDES HARN.INLINE P/DOOR)	00	Y07 (M30, CJ2) (EXC JL4, T89)	1	10442567
5-M10	2.480	HARNESS, I/P WRG (INCLUDES PROVISIONS FOR MAN. SUPPRESSION SYS. INCLUDES HARN.INLINE P/DOOR)	00	Y07 (M30, C60) (EXC JL4. N37)	1	10442570
5-M10	2.480	HARNESS, I/P WRG (INCLUDES PROVISIONS FOR MAN. SUPPRESSION SYS. INCLUDES HARN.INLINE P/DOOR)	00	Y07 (MM6, CJ2) (EXC JL4, T89)	1	10442571
5-M10	2.480	HARNESS, I/P WRG (INCLUDES PROVISIONS FOR MAN. SUPPRESSION SYS. INCLUDES HARN.INLINE P/DOOR)	00	Y07 (MM6, C60) (EXC JL4, N37)	1	10442574
5-M10	2.480	HARNESS, I/P WRG (INCLUDES PROVISIONS FOR MAN. SUPPRESSION SYS. INCLUDES HARN.INLINE P/DOOR)	00	Y67 (M30, CJ2) (EXC T89)	1	10442575
5-M10	2.480	HARNESS, I/P WRG (INCLUDES PROVISIONS FOR MAN. SUPPRESSION SYS. INCLUDES HARN.INLINE P/DOOR)	00	Y67 (M30, C60) (EXC N37)	1	10442578
5-M10	2.480	HARNESS, I/P WRG (INCLUDES PROVISIONS FOR MAN. SUPPRESSION SYS. INCLUDES HARN.INLINE P/DOOR)	00	Y67 (MM6, C60) (EXC N37)	1	10442582
5-M10	2.480	HARNESS, I/P WRG	00	YY07 (MM6, CJ2) (EXC JL4, N37, T89)	1	10442572
5-M10	2.480	HARNESS, I/P WRG	01	Y07 (M30, CJ2, JL4) (EXC T89)	1	10310779

cardiagn.com

						1Y10-043
5-M10	2.480	HARNESS, I/P WRG (2ND DSN USED ON/AFTER VIN #15107689, (1ST DSN 10448088))	01	Y07 (M30, C60, JL4) (EXC N37) (2ND DES) .	1	10310780
5-M10	2.480	HARNESS, I/P WRG (2ND DSN USED ON/AFTER VIN #15107689, (1ST DSN 10448089))	01	Y07 (MM6, CJ2, JL4) (EXC T89) (2ND DES) ..	1	10310781
5-M10	2.480	HARNESS, I/P WRG (2ND DSN USED ON/AFTER VIN #15107689, (1ST DSN 10448090))	01	Y07 (MM6, C60, JL4) (EXC N37) (2ND DES) .	1	10310782
5-M10	2.480	HARNESS, I/P WRG (1ST DSN USED B/4 VIN #15107689. (2ND DSN 10310779))	01	Y07 (M30, CJ2, JL4) (EXC N37, T89) (1ST DES)	1	10448087
5-M10	2.480	HARNESS, I/P WRG (1ST DSN USED B/4 VIN #15107689. (2ND DSN 10310780))	01	Y07 (M30, C60, JL4) (EXC N37) (1ST DES) ..	1	10448088
5-M10	2.480	HARNESS, I/P WRG (1ST DSN USED B/4 VIN #15107689, (2ND DSN 10310781))	01	Y07 (MM6, CJ2, JL4, N37) (EXC T89) (1ST DES)	1	10448089
5-M10	2.480	HARNESS, I/P WRG (1ST DSN USED B/4 VIN #15107689, (2ND DSN 10310782))	01	Y07 (MM6, C60, JL4) (EXC N37) (1ST DES) ..	1	10448090
5-M10	2.480	HARNESS, I/P WRG (2ND DSN USED ON/AFTER VIN #15107689, (1ST DSN 10448103))	01	Y67 (M30, CJ2) (EXC T89) (2ND DES)	1	10310787
5-M10	2.480	HARNESS, I/P WRG (2ND DSN USED ON/AFTER VIN #15107689, (1ST DSN 10448104))	01	Y67 (M30, C60) (EXC N37) (2ND DES)	1	10310788
5-M10	2.480	HARNESS, I/P WRG (2ND DSN USED ON/AFTER VIN #15107689, (1ST DSN 10448105))	01	Y67 (MM6, CJ2) (EXC T89) (2ND DES)	1	10310789
5-M10	2.480	HARNESS, I/P WRG (1ST DSN USED B/4 VIN #15107689, (2ND DSN 10310787))	01	Y67 (M30, CJ2, N37) (EXC T89) (1ST DES) ..	1	10448103
5-M10	2.480	HARNESS, I/P WRG (1ST DSN USED B/4 VIN #15107689, (2ND DSN 10310788))	01	Y67 (M30, C60) (EXC N37) (1ST DES)	1	10448104
5-M10	2.480	HARNESS, I/P WRG (1ST DSN USED B/4 VIN #15107689, (2ND DSN 10310789))	01	Y67 (MM6, CJ2, N37) (EXC T89) (1ST DES) ..	1	10448105
5-M10	2.480	HARNESS, I/P WRG (1ST DSN USED B/4 VIN #15107689, (2ND DSN 10310790))	01	Y67 (MM6, C60) (EXC N37) (1ST DES)	1	10448106
5-M10	2.480	HARNESS, I/P WRG	01-02	YY37 (CJ2)	1	10310789
5-M10	2.480	HARNESS, I/P WRG (2ND DSN USED ON/AFTER VIN #15107689, (1ST DSN 10448106))	01	YY67 (MM6, C60) (EXC N37) (2ND DES)	1	10310790
5-M10	2.480	HARNESS, I/P WRG	02	Y07 (MM6, CJ2) (EXC T69)	1	10310781
5-M10	2.480	HARNESS, I/P WRG	02	Y07 (MM6, C60) (EXC N37)	1	10310782

cardiagn.com

						1Y10-043
5-M10	2.480	HARNESS, I/P WRG	02	Y67 (M30, CJ2) (EXC T89)	1	10310787
5-M10	2.480	HARNESS, I/P WRG	02	Y67 (MM6, CJ2) (EXC T89)	1	10310789
5-M10	2.480	HARNESS, I/P WRG	02	YY07 (M30, CJ2) (EXC T89)	1	10310779
5-M10	2.480	HARNESS, I/P WRG	02	YY07 (M30, C60) (EXC N37)	1	10310780
5-M10	2.480	HARNESS, I/P WRG	02	YY67 (M30, C60) (EXC N37)	1	10310788
5-M10	2.480	HARNESS, I/P WRG	02	YY67 (MM6, C60) (EXC N37)	1	10310790
5-M10	2.480	HARNESS, I/P WRG (MAY REQUIRE 12450028 I/P COMPT LP & 12102616 PWR RCPT CONN)	99-00	Y07 (M30, CJ2, JL4, T89) (EXPORT)	1	12190426
5-M10	2.480	HARNESS, I/P WRG (MAY REQUIRE 12450028 I/P COMPT LP & 12102616 PWR RCPT CONN)	99-00	Y07 (M30, C60, JL4, T89) (EXPORT)	1	12190428
5-M10	2.480	HARNESS, I/P WRG (MAY REQUIRE 12450028 I/P COMPT LP & 12102616 PWR RCPT CONN)	99-00	Y07 (MM6, CJ2, JL4, T89) (EXPORT)	1	12190431
5-M10	2.480	HARNESS, I/P WRG (MAY REQUIRE 12450028 I/P COMPT LP & 12102616 PWR RCPT CONN)	99-00	Y07 (MM6, C60, JL4, T89) (EXPORT)	1	12190433
5-M10	2.480	HARNESS, I/P WRG (MAY REQUIRE 12450028 I/P COMPT LP & 12102616 PWR RCPT CONN)	99-00	Y07 (M30, CJ2, T89) (EXC JL4) (EXPORT) ..	1	12190436
5-M10	2.480	HARNESS, I/P WRG (MAY REQUIRE 12450028 I/P COMPT LP & 12102616 PWR RCPT CONN)	99-00	Y07 (M30, C60, T89) (EXC JL4) (EXPORT) ..	1	12190438
5-M10	2.480	HARNESS, I/P WRG (MAY REQUIRE 12450028 I/P COMPT LP & 12102616 PWR RCPT CONN)	99-00	Y07 (MM6, CJ2, T89) (EXC JL4) (EXPORT) ..	1	12190441
5-M10	2.480	HARNESS, I/P WRG (MAY REQUIRE 12450028 I/P COMPT LP & 12102616 PWR RCPT CONN)	99-00	Y07 (MM6, C60, T89) (EXC JL4) (EXPORT) ..	1	12190443
5-M10	2.480	HARNESS, I/P WRG (MAY REQUIRE 12450028 I/P COMPT LP & 12102616 PWR RCPT CONN)	99-00	Y67 (M30, CJ2, T89) (EXPORT)	1	12190446
5-M10	2.480	HARNESS, I/P WRG (MAY REQUIRE 12450028 I/P COMPT LP & 12102616 PWR RCPT CONN)	99-00	Y67 (M30, C60, T89) (EXPORT)	1	12190448
5-M10	2.480	HARNESS, I/P WRG (MAY REQUIRE 12450028 I/P COMPT LP & 12102616 PWR RCPT CONN)	99-00	Y67 (MM6, CJ2, T89) (EXPORT)	1	12190451

cardiagn.com

						1Y10-043
5-M10	2.480	HARNESS, I/P WRG (MAY REQUIRE 12450028 I/P COMPT LP & 12102616 PWR RCPT CONN)	99-00	Y67 (MM6, C60, T89) (EXPORT)	1	12190453
5-M10	2.480	HARNESS, I/P WRG (INCLUDES PROVISIONS FOR MAN. SUPPRESSION SYS. INCLUDES HARN. INLINE P/DOOR) .	00	Y07 (M30, CJ2, JL4, T89) (EXPORT)	1	10442561
5-M10	2.480	HARNESS, I/P WRG (INCLUDES PROVISIONS FOR MAN. SUPPRESSION SYS. INCLUDES HARN. INLINE P/DOOR)	00	Y07 (MM6, CJ2, JL4, T89) (EXPORT)	1	10442565
5-M10	2.480	HARNESS, I/P WRG (INCLUDES PROVISIONS FOR MAN. SUPPRESSION SYS. INCLUDES HARN.INLINE P/DOOR)	00	Y07 (M30, CJ2, T89) (EXC JL4) (EXPORT) ..	1	10442569
5-M10	2.480	HARNESS, I/P WRG (INCLUDES PROVISIONS FOR MAN. SUPPRESSION SYS. INCLUDES HARN.INLINE P/DOOR)	00	Y07 (MM6, CJ2, T89) (EXC JL4) (EXPORT) ..	1	10442573
5-M10	2.480	HARNESS, I/P WRG	00	Y07 (M30, C60, JL4, T89) (EXPORT)	1	15329429
5-M10	2.480	HARNESS, I/P WRG	00	Y07 (MM6, C60, JL4, T89) (EXPORT)	1	15329434
5-M10	2.480	HARNESS, I/P WRG	00	Y07 (M30, C60, T89) (EXC JL4) (EXPORT) ..	1	15329439
5-M10	2.480	HARNESS, I/P WRG	00	Y07 (MM6, C60, T89) (EXC JL4) (EXPORT) ..	1	15329444
5-M10	2.480	HARNESS, I/P WRG (INCLUDES PROVISIONS FOR MAN. SUPPRESSION SYS. INCLUDES HARN.INLINE P/DOOR)	00	Y67 (M30, CJ2, T89) (EXPORT)	1	10442577
5-M10	2.480	HARNESS, I/P WRG (INCLUDES PROVISIONS FOR MAN. SUPPRESSION SYS. INCLUDES HARN.INLINE P/DOOR)	00	Y67 (MM6, CJ2, T89) (EXPORT)	1	10442581
5-M10	2.480	HARNESS, I/P WRG	00	Y67 (M30, C60, T89) (EXPORT)	1	15329449
5-M10	2.480	HARNESS, I/P WRG	00	Y67 (MM6, C60, T89) (EXPORT)	1	15329454
5-M10	2.480	HARNESS, I/P WRG (2ND DSN USED ON/AFTER VIN #15107689, (1ST DSN 10448091))	01	Y07 (M30, CJ2, JL4, T89) (2ND DES) (EXPORT)	1	10310783
5-M10	2.480	HARNESS, I/P WRG (2ND DSN USED ON/AFTER VIN #15107689, (1ST DSN 10448092))	01	Y07 (MM6, CJ2, JL4, T89) (2ND DES) (EXPORT)	1	10310784
5-M10	2.480	HARNESS, I/P WRG (1ST DSN USED B/4 VIN #15107689, (2ND DSN 10310783))	01	Y07 (M30, CJ2, JL4, T89) (1ST DES) (EXPORT)	1	10448091
5-M10	2.480	HARNESS, I/P WRG (1ST DSN USED B/4 VIN #15107689, (2ND DSN 10310784))	01	Y07 (MM6, CJ2, JL4, T89) (1ST DES) (EXPORT)	1	10448092
5-M10	2.480	HARNESS, I/P WRG (2ND DSN USED ON/AFTER VIN #15107689, (1ST DSN 10448107))	01	Y67 (M30, CJ2, T89) (2ND DES) (EXPORT) ..	1	10310791

cardiagn.com

					1Y10-043	
5-M10	2.480	HARNESS, I/P WRG (2ND DSN USED ON/AFTER VIN #15107689, (1ST DSN 10448108))	01	Y67 (MM6, CJ2, T89) (2ND DES) (EXPORT) ..	1	10310792
5-M10	2.480	HARNESS, I/P WRG (1ST DSN USED B/4 VIN #15107689, (2ND DSN 10310791))	01	Y67 (M30, CJ2, T89) (1ST DES) (EXPORT) ..	1	10448107
5-M10	2.480	HARNESS, I/P WRG (1ST DSN USED B/4 VIN #15107689, (2ND DSN 10310792))	01	Y67 (MM6, CJ2, T89) (1ST DES) (EXPORT) ..	1	10448108
5-M10	2.480	HARNESS, I/P WRG	02	Y07 (M30, CJ2, T89) (EXPORT)	1	10310783
5-M10	2.480	HARNESS, I/P WRG	02	Y07 (MM6, CJ2, T89) (EXPORT)	1	10310784
5-M10	2.480	HARNESS, I/P WRG	02	YY67 (M30, CJ2, T89) (EXPORT)	1	10310791
5-M10	2.480	HARNESS, I/P WRG	02	YY67 (MM6, CJ2, T89) (EXPORT)	1	10310792

RPO DEFINITIONS

CJ2 – HVAC SYSTEM AIR CONDITIONER FRT, AUTO TEMP CONT, AUX TEMP CONT
C60 – AIR CONDITIONER,FRONT,MANUAL CONTROLS
JL4 – CONTROL ACTIVE BRAKE
MM6 – TRANSMISSION MAN 6 SPD, BORG WARNER, 85MM, 1ST 2.66, 6TH 0.50, O/D
M30 – TRANSMISSION,AUTOMATIC 4 SPEED,4L60E,ELECTRONIC
N37 – STEERING COLUMN,TILT AND TELESCOPING
T89 – LAMP,TAIL AND STOP(EXPORT)
T96 – LAMP,FRONT FOG
UV6 – DISPLAY,HEADUP
U52 – CLUSTER,INSTRUMENT(ELECTRONIC)
VD1 – PROVISION OPTIONS,EUROPE(EXPORT)
19I – INTERIOR TRIM,BLACK
67I – INTERIOR TRIM,CAMEL
70I – INTERIOR TRIM,TORCH RED
92I – INTERIOR TRIM SHALE/PEWTER
94I – INTERIOR TRIM FIRETHORN RED (97)

cardiagn.com

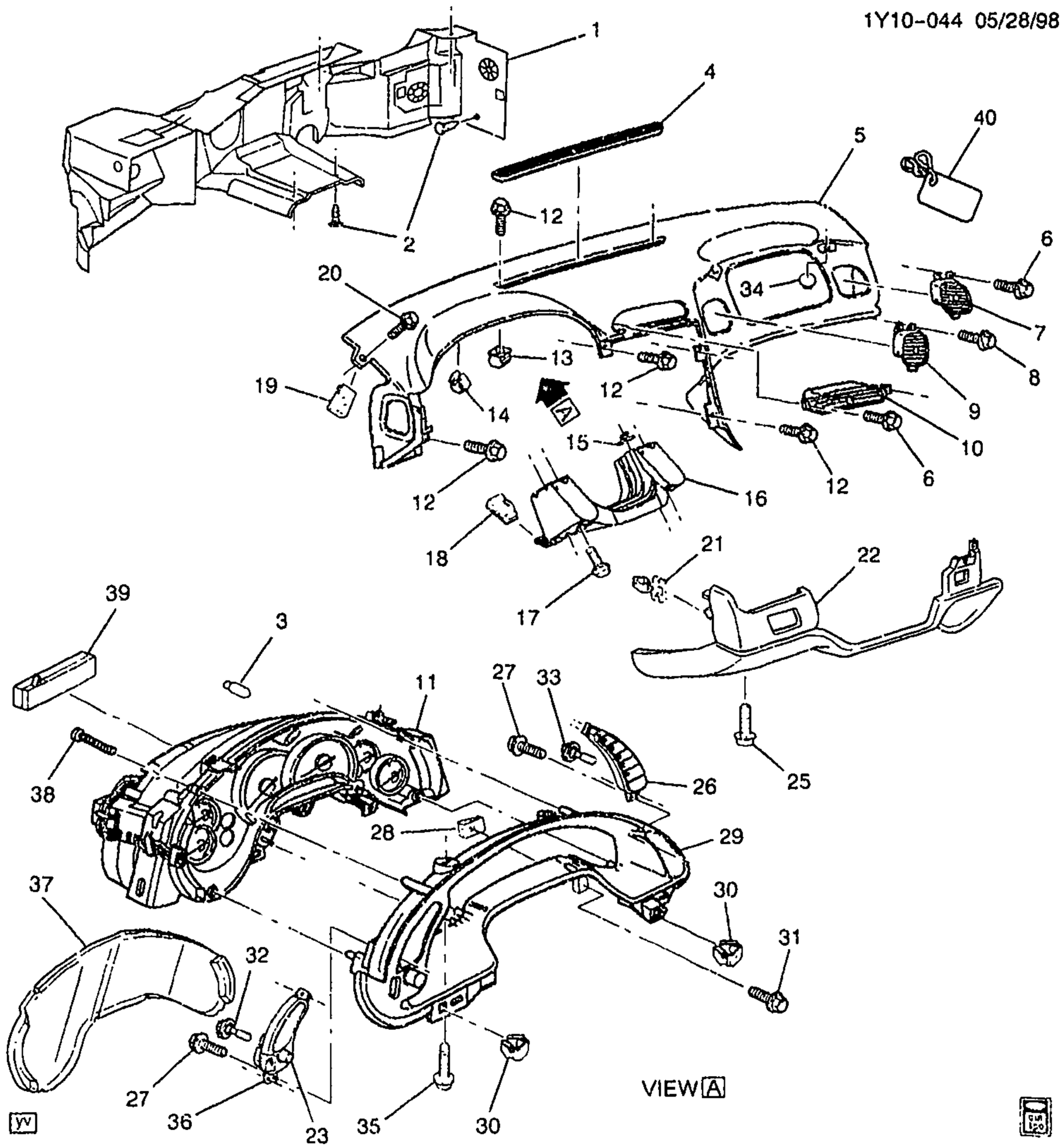

1Y10-044

1999-2002 Y37 INSTRUMENT PANEL PART 1 (TRIM PAD/PANELS/CLUSTER)

1.	5-N21	12.804	INSULATOR, DA PNL	99-02	Y	1	10433334
2.		8.950	RETAINER, FITS .250 HOLE, 1.01LG.700-OD NYLON BLACK (DA PNL INSL)	99-02	.....	5	10121502
3.	5-N17	9.744	BULB, INST CSTR (PART OF 11) (AC-DELCO #12533422)	99-02	Y	1	12533422
4.	5-N17	9.779	GRILLE, W/S DEFR NOZ (BLACK)	99-02	Y (CJ2)	1	10400366

cardiagn.com

							1Y10-044
	5-N17	9.779	GRILLE, W/S DEFR NOZ (BLACK)	99-02	Y (C60)	1	10400367
5.	5-A16	10.235	PAD, I/P UPR TR (INCLS 40) (W/ OTLTS & DUCTS) (BLACK)	99-02	Y (EXC UV6)	1	10303150
	5-A16	10.235	PAD, I/P UPR TR (INCLS 40) (LESS OTLTS & DUCTS) (BLACK)	99-02	Y (EXC UV6)	1	10443974
	5-A16	10.235	PAD, I/P UPR TR (INCLS 40) (INCLS BEZELS, DUCT & OUTLETS) (BLACK)	99-02	Y (UV6)	1	10303149
	5-A16	10.235	PAD, I/P UPR TR (INCLS 40) (BLACK)	99-00	Y (EXC UV6)	1	10406513
6.		8.977	SCREW, HEX W/FL WA HI-LO TAP M4.2X1.41X16, 8-OD, BTHL PT, FLTD HRD, FL (I/P OTR AIR OTLT)	99-02		6	11508917
		8.929	WASHER, FL 7/32X1/2X5/8 1050 CAD HARD (I/P OTR AIR OTLT)	99-02		6	2077521
7.		N.S.	OUTLET, I/P CTR AIR				
8.		8.977	SCREW, HEX W/FL WA HI-LO TAP M4.2X1.41X16, 8-OD, BTHL PT, FLTD HRD, FL (I/P CTR AIR OTLT)	99-02		3	11508917
		8.929	WASHER, FL 7/32X1/2X5/8 1050 CAD HARD (I/P OTR AIR OTLT)	99-02		6	2077521
9.	5-N11	9.262	OUTLET, I/P CTR AIR	99-02	Y	RH	10406515
10.	5-N11	9.262	OUTLET, I/P CTR AIR	99-02	Y	LH	10406514
11.		N.S.	CLUSTER, INST (INCLS 3, 29, 37, 39) (CLUSTERS SOLD THRU ACD REPAIR CENTERS)	99-02			
12.		8.977	SCREW, HEX W/FL WA M4.2X2.25X20 TAP POR (I/P UPR TR PAD (AT PLNM PNL))	99-02		7	11508443
13.	5-A16	10.235	NUT, I/P UPR TR PAD (4.2X1.41 TAPPING) (SPL) (3.430)	99-02	Y37	2	25536302
14.	5-A16	10.235	NUT, I/P UPR TR PAD (M4.2X1.41) (PUSH-IN FOR 12MM SQ HOLE) (10.252)	99-02	Y37	4	17988488
15.	5-A16	10.235	NUT, I/P DRVR KNEE BOLS BRKT (4.2X1.41 TAPPING) (SPL) (3.430)	99-02	Y	4	25536302
16.	5-A16	10.235	BRACKET, I/P DRVR KNEE BOLS (10.230)	99-02	Y	1	10289379
17.		8.977	SCREW, HEX W/FL WA M4.2X2.25X20 TAP POR (I/P DRVR KNEE BOLS)	99-02		4	11508443
18.		8.921	NUT, U TYPE, MULTI THD, PREV TORQ, M4.2X1.41TAP, 8.1REACH, 0.65-3.80 PNLS 1065 PZOR (I/P DRVR KNEE BOLS) (AC-DELCO #11513599)	99-02		2	11513599
19.		8.921	NUT, U TYPE, MULTI THD, PREV TORQ, M4.2X1.41TAP, 8.1REACH, 0.65-3.80 PNLS 1065 PZOR (I/P UPR T/PNL) (AC-DELCO #11513599)	99-02		2	11513599

cardiagn.com

							1Y10-044
20.		8.977	BOLT-SCREW, M4.2X1.41X13, 5.4 THD, 12.5 OD, GM6172M, GM6138M (I/P UPR TR PAD (AT FRT S/D H/PLR))	99-02		2	15714277
21.	5-A16	10.235	RETAINER, I/P DRVR KNEE BOLS PNL (PUSH IN)	99-02	Y	2	21040288
22.	5-A16	10.235	PANEL, I/P DRVR KNEE BOLS (BLACK)	99-02	Y (19I)	1	10426429
	5-A16	10.235	PANEL, I/P DRVR KNEE BOLS (RED)	01-02	Y (70I)	1	10426433
23.	5-M27	2.490	KNOB, I/P & INTR LP D/SW	99-02	Y	1	12198636
25.		8.977	SCREW, PAN HD TORX W/FL WA M4.2X1.41X20303 BLK (I/P DRVR KNEE BOLS PNL)	99-02		3	11508561
26.	5-N17	9.768	SWITCH, DRVR INFO DISPLAY (AC-DELCO #12135152)	99-02	Y (U52)	1	12135152
27.	5-A17	10.252	BOLT, I/P ACSRY BZL (M4.2X1.41X16 TORX RND HD) (16.069)	99-02	Y	4	15659231
28.		8.921	NUT, U TYPE, MULTI THD, PREV TORQ, M4.2X1.41TAP, 8.1REACH, 0.65-3.80 PNLS 1065 PZOR (INST CSTR) (POSN #1) (AC-DELCO #11513599)	99-02		2	11513599
29.	5-N17	9.743	BEZEL, I/P CSTR TR PLT (PART OF 11)	99-02	Y (U52)	1	10417123
30.	5-N17	9.735	NUT, INST CSTR (POSN #2) (4.2X1.41 TAPPING) (SPL) (3.430)	99-02	Y	2	25536302
31.		8.977	BOLT, HWH, M4.2X1.41X20, 7.8 OD, ST, 6172M, ZN BR, TAP, DRILL PT (INST CSTR)	99-02		2	11513568
32.		8.991	BULB, I/P LP DIMR SW (W/H.U.D., W/O BOOT) (2.490)	99-02	Y (UV6)	3	12198644
		8.991	BULB, I/P LP DIMR SW (W/O BOOT) (2.490)	99-02	Y (EXC UV6)	1	12198644
33.	5-N17	9.769	BULB, DRVR INFO DISPLAY SW (W/O BOOT) (.5CP) (9.279) (AC-DELCO #16056613)	99-02	Y (U52)	3	16056613
34.		8.917	NUT, HFH 6X1X7 SELF LK 14.2-OD (9) 7111M ALL MET PREV TORQ (I/P ASST HDL)	99-02		2	11516075
35.		8.977	SCREW, PAN HD W/WA, TORX, M4.2X1.41X20, NC (INST CSTR LENS)	99-02		2	11515439
36.	5-M27	2.490	SWITCH, I/P LP DIMR (AC-DELCO #D1577E)	99-01	Y	1	12135149
	5-M27	2.490	SWITCH, I/P LP DIMR (AC-DELCO #D1577E)	02	Y (EXC UV6)	1	12135149
37.	5-N17	9.748	LENS, INST CSTR (PART OF 11) (AC-DELCO #12533420)	99-02	Y (U52)	1	12533420
38.		8.977	SCREW, PAN HD C/R TAP M4.2X1.41X30 AB POR (I/P CSTR TR PLT BZL) (8.913)	99-02		6	11517072
39.	5-C17	11.927	INVERTER, LUMINESCENT LP (PART OF 11)	99	Y	1	12533421
	5-C17	11.927	INVERTER, LUMINESCENT LP (PART OF 11)	00-02	Y (EXC UV6)	1	12533421

cardiagn.com

							1Y10-044
	5-C17	11.927	INVERTER, LUMINESCENT LP (PART OF 11)	02	YY37 (U52)	1	12533421
40.	5-N9	8.808	TAG, INFL RST I/P MDL CAUTION (PART OF 5)	99-00	Y	1	15002618
	5-N9	8.808	TAG, INFL RST I/P MDL CAUTION (PART OF 5)	01-02	Y	1	10447122

RPO DEFINITIONS
CJ2 – HVAC SYSTEM AIR CONDITIONER FRT, AUTO TEMP CONT, AUX TEMP CONT
C60 – AIR CONDITIONER,FRONT,MANUAL CONTROLS
UV6 – DISPLAY,HEADUP
U52 – CLUSTER,INSTRUMENT(ELECTRONIC)
19I – INTERIOR TRIM,BLACK
70I – INTERIOR TRIM,TORCH RED

cardiagn.com

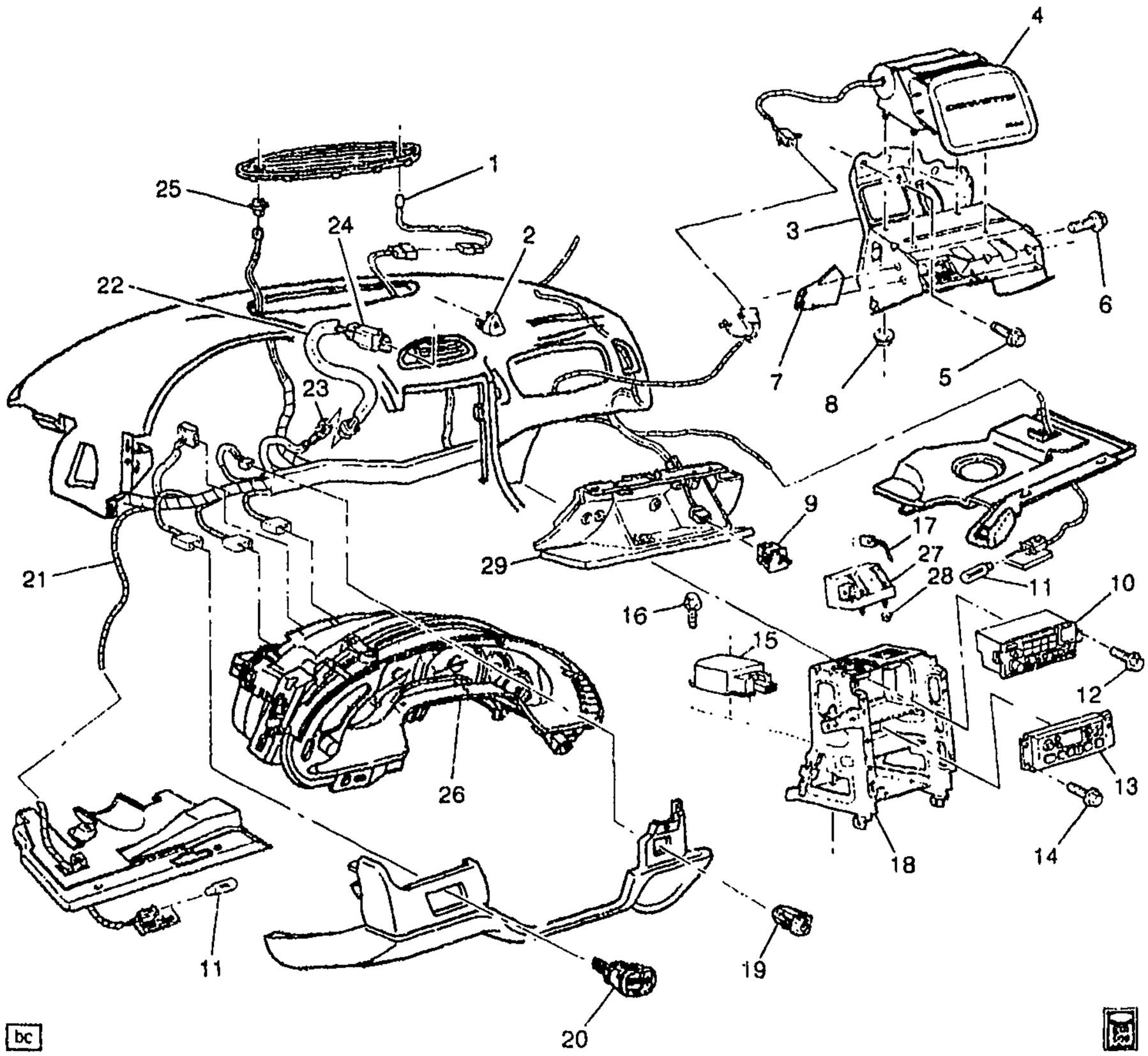

1Y10-048

1999-2002 Y INSTRUMENT PANEL PART 3 (ELECTRICAL)

1.	5-N12	9.275	SENSOR, SUN LOAD TEMP (AC-DELCO #15-71849)	99-02	Y (CJ2)	1	16137340
	5-N12	9.275	CONNECTOR, SEN-SUN LOAD TEMP (PART OF 21) (BLACK) (2-WAY M W/LEADS) (2.535) (AC-DELCO #PT103)	99-02	Y	1	12085481
	5-N12	9.275	CONNECTOR, SEN-SUN LOAD TEMP (PART OF 21) (BLACK) (2-WAY M W/LEADS) (2.535) (AC-DELCO #PT103)	02	YY67 (M30, CJ2, N37) (EXC T89)	1	12085481
2.	5-N7	2.575	PUSHBUTTON, HAZARD WRNG SW	99-02	Y	1	10295550

cardiagn.com

							1Y10-048
3.	5-N26	14.865	BRACKET, I/P INFL RST MDL (#50)	99-02	Y (AK5)	1	10437332
4.	5-N26	14.865	MODULE, I/P INFL RST	99-02	Y (AK5)	1	10415724
	5-N26	14.865	CONNECTOR, MDL-INFL RST SEN & DIAGN (AC-DELCO #PT1376)	99-02	Y	1	15306322
5.		8.900	SCREW, M6X1X30, 11 THD, 12.5 OD, 4.8, 6047M, P-PT (I/P INFL RST MDL BRKT)	99-02		7	11508128
6.		8.900	SCREW, M6X1X30, 11 THD, 12.5 OD, 4.8, 6047M, P-PT (I/P PASS KNEE BOLS BRKT)	99-02		2	11508128
7.	5-A16	10.235	BRACKET, I/P PASS KNEE BOLS	99-02	Y	1	10282775
8.		8.917	NUT, HEX W/CON WA 6X1X5.5 16-OD ZP 9 (INFL RST I/P MDL)	99-02		4	11517293
9.	5-A20	10.275	SWITCH, I/P COMPT LP (INCLS BULB)	99-02	Y	1	12450028
	5-A20	10.275	CONNECTOR, LP-I/P COMPT (PART OF 21) (2-WAY F W/LEADS W/INDEX TAB OTR EDGE OF CAVITY B) (2.535) (AC-DELCO #PT146) (BLACK, FOR 1ST DES SEE 12102616 (PT303)	99-00	Y (2ND DES)	1	12085535
	5-A20	10.275	CONNECTOR, LP-I/P COMPT (PART OF 21) (2-WAY F W/LEADS) (3.887) (AC-DELCO #PT313) (BLUE, FOR 2ND DES SEE 12085535 (PT146)	99	Y (1ST DES)	1	12102626
	5-A20	10.275	CONNECTOR, LP-I/P COMPT (PART OF 21) (2-WAY F W/LEADS W/INDEX TAB OTR EDGE OF CAVITY B) (2.535) (AC-DELCO #PT146)	01-02	Y	1	12085535
	5-A20	10.275	CONNECTOR, LP-I/P COMPT (PART OF 21) (2-WAY F W/LEADS W/INDEX TAB OTR EDGE OF CAVITY B) (2.535) (AC-DELCO #PT146)	02	YY67	1	12085535
10.	5-N13	9.650	RADIO, AM/FM STEREO & CLK & T/PLYR (AC-DELCO #16257631)	99	Y (UL0, UZ6) (EXC UK1, UL2)	1	16257631
	5-N13	9.650	RADIO, AM/FM STEREO & CLK & T/PLYR (AC-DELCO #16210221)	99-00	Y37 (UL0, UQ5) (EXC UK1, UL2)	1	16210221
	5-N13	9.650	RADIO, AM/FM STEREO & CLK & T/PLYR (AC-DELCO #9390231)	00-02	Y (UL0, UZ6) (EXC UK1, UL2)	1	9390231
	5-N13	9.650	RADIO, AM/FM STEREO & CLK & CD PLYR (AC-DELCO #16257601)	99	Y (UN0, UZ6)	1	16257601
	5-N13	9.650	RADIO, AM/FM STEREO & CLK & CD PLYR (AC-DELCO #9390211)	00-02	Y (UN0, UZ6)	1	9390211
	5-N14	9.656	CONNECTOR, RDO (NATURAL) (9-WAY F, W/LEADS) (4.329) (AC-DELCO #PT315)	99-02	Y	1	12102628

cardiagn.com

							1Y10-048
	5-N14	9.656	CONNECTOR, RDO (NATURAL) (4-WAY) (W/LEADS) (AC-DELCO #PT323)	99-02	Y	1	12102636
	5-N14	9.656	CONNECTOR, RDO (WHITE) (10-WAY F) (W/LEADS) (AC-DELCO #PT582)	99-02	Y	1	12125670
	5-N14	9.656	CONNECTOR, RDO (BLACK) (10-WAY F) (W/LEADS) (2.535) (AC-DELCO #PT108)	02	YY67 (M30, CJ2, N37) (EXC T89)	1	12085486
	5-N14	9.656	CONNECTOR, RDO (NATURAL) (9-WAY F, W/LEADS) (4.329) (AC-DELCO #PT315)	02	YY67 (M30, CJ2, N37) (EXC T89)	1	12102628
	5-N14	9.656	CONNECTOR, RDO (NATURAL) (4-WAY) (W/LEADS) (AC-DELCO #PT323)	02	YY67 (M30, CJ2, N37) (EXC T89)	1	12102636
	5-N14	9.656	CONNECTOR, RDO (WHITE) (10-WAY F) (W/LEADS) (AC-DELCO #PT582)	02	YY67 (M30, MM6, CJ2, C60) (EXC T89)	1	12125670
	5-N14	9.656	CONNECTOR, RDO (10-WAY FEMALE M/P 100 (W/LEADS) .) (BLACK) (10-WAY F) (W/LEADS) (2.535) (AC-DELCO #PT108) ...	99-02	Y	1	12085486
	5-N13	9.650	RADIO, AM/FM STEREO & CLK & T/PLYR (AC-DELCO #16257611)	99	Y (UL0, UL2, UZ6) (EXPORT)	1	16257611
	5-N13	9.650	RADIO, AM/FM STEREO & CLK & T/PLYR (AC-DELCO #16257621)	99	Y (UK1, UL0, UZ6) (EXPORT)	1	16257621
	5-N13	9.650	RADIO, AM/FM STEREO & CLK & T/PLYR (AC-DELCO #9390221)	00-02	Y (UK1, UL0, UZ6) (EXPORT)	1	9390221
	5-N13	9.650	RADIO, AM/FM STEREO & CLK & T/PLYR (AC-DELCO #9390241)	00-02	Y (UL0, UL2, UZ6) (EXPORT)	1	9390241
11.		8.991	TRADE#194, 12V, 2CP (I/P C/LP) (AC-DELCO #L194)	99-02	.....	2	9421330
12.		8.977	SCREW, HEX W/FL WA M4.2X2.25X20 TAP POR (RDO) ..	99-02	.....	2	11508443
13.	5-N12	9.273	CONTROL, HTR & A/C (AC-DELCO #15-72537) (LABELED 9366311. FOR 2ND DES SEE 09370871)	99	Y (C60) (1ST DES)	1	9366311
	5-N12	9.273	CONTROL, HTR & A/C (AC-DELCO #15-72546) (LABELED 09370871. FOR 1ST DES SEE 09366311)	99	Y (C60) (2ND DES)	1	9370871
	5-N12	9.273	CONTROL, HTR & A/C (AC-DELCO #15-72513)	99	Y (CJ2)	1	16254311
	5-N12	9.273	CONTROL, HTR & A/C (AC-DELCO #15-72591)	00	Y (C60)	1	9380311
	5-N12	9.273	CONTROL, HTR & A/C (AC-DELCO #15-72592)	00-02	Y (CJ2)	1	10436062
	5-N12	9.273	CONTROL, HTR & A/C (AC-DELCO #15-72690)	01-02	Y (C60)	1	10447750
14.		8.977	SCREW, HEX W/FL WA M4.2X2.25X20 TAP POR (HTR & A/C CONT)	99-02	....	2	11508443
15.	5-N26	14.865	MODULE, INFL RST SEN & DIAG	99	Y (AK5)	1	9380620

cardiagn.com

							1Y10-048
	5-N26	14.865	MODULE, INFL RST SEN & DIAG	00	Y07-67 (AK5, C88) ...	1	9391830
	5-N26	14.865	MODULE, INFL RST SEN & DIAG	00	Y (AK5) (EXC C88)	1	9391990
	5-N26	14.865	MODULE, INFL RST SEN & DIAG	01-02	Y (AK5) (EXC C88)	1	12209740
	5-N26	14.865	CONNECTOR, MDL-INFL RST SEN & DIAGN (AC-DELCO #PT1376)	99-02	Y	1	15306322
	5-N26	14.865	MODULE, INFL RST SEN & DIAG	00-02	Y07-67 (AK5, C88) (EXPORT)	1	12209730
16.		8.900	BOLT/SCREW, HEX W/FL WA 17 OD, M6X1X20, 9.8, 4345M, DOG PT (INFL RST DIAGN ENGY RESV MDL)	99-02	.....	3	11515704
17.	5-N8	7.440	CONNECTOR, SEN-VEH YAW (3-WAY F) (W/LEADS) (2.530) (AC-DELCO #PT1490)	99-00	Y	1	12117320
	5-N8	7.475	CONNECTOR, SEN-VEH YAW & LAT ACCLRM (3-WAY F) (W/LEADS) (2.530) (AC-DELCO #PT1490)	99	Y	1	12117320
18.	5-A16	10.230	BRACKET, I/P CTR SUPT	99-02	Y	1	10433229
19.	5-N12	9.275	SENSOR, I/S AIR TEMP (AC-DELCO #15-72496)	99-02	Y	1	16267411
	5-N12	9.275	CONNECTOR, SEN-I/S AIR TEMP (PART OF 21) (2-WAY F W/LEADS W/INDEX TAB OTR EDGE OF CAVITY B) (2.535) (AC-DELCO #PT146)	99-02	Y	1	12085535
	5-N12	9.275	CONNECTOR, SEN-I/S AIR TEMP (PART OF 21) (2-WAY F W/LEADS W/INDEX TAB OTR EDGE OF CAVITY B) (2.535) (AC-DELCO #PT146)	02	YY67 (M30, CJ2, N37) (EXC T89)	1	12085535
20.	5-N19	12.243	SWITCH, R/CMPT LID REL (AC-DELCO #D7012C)	99-02	Y (EXC T96, VD1)	1	12135157
	5-N19	12.243	SWITCH, R/CMPT LID REL (LOCATED ON LAT IN TRUNK) (AC-DELCO #D1459C)	02	Y67	1	16608046
	5-M26	2.485	SWITCH, FOG LP (INCLUDES HATCH RELEASE SWITCH)	99-02	Y (T96) (EXC VD1)	1	12135155
	5-M26	2.485	CONNECTOR, SW-FOG LP (PART OF 21) (2.535) (AC-DELCO #PT265)	99	Y	1	12101874
		8.991	BULB, FRT FOG LP IND LP (.5CP) (9.279) (AC-DELCO #16056613)	99-02	Y	1	16056613
	5-M26	2.485	SWITCH, FOG LP	99-02	Y (VD1) (EXPORT)	1	12135156
21.		N.S.	HARNESS, I/P WRG (INCLS 23, 25) (SEE GROUP 10.000 "INSTRUMENT PANEL PART 3" FOR DETAILED ILLUSTRATED VIEW.)		....		
	5-M9	2.440	CONNECTOR, DATA LINK (16-WAY F W/O LEADS W/MTG TABS) (AC-DELCO #PT1477) ..	99-01	Y	1	12110250
	5-M9	2.440	CONNECTOR, DATA LINK (12-WAY F) (W/LEADS AND CAP) (AC-DELCO #PT1101)	99-01	Y	1	15305914

cardiagn.com

							1Y10-048
	5-M9	2.440	CONNECTOR, DATA LINK (16-WAY F W/O LEADS W/MTG TABS) (AC-DELCO #PT1477) ..	02	YY67	1	12110250
	5-M9	2.440	CONNECTOR, DATA LINK (12-WAY FEMALE GT 150 (W/LEADS) .) (12-WAY F) (W/LEADS AND CAP) (AC-DELCO #PT1101)	02	YY67	1	15305914
22.	5-M10	2.480	HARNESS, HAZARD LP & T/SIG LP FLSHR WRG	99-02	Y	1	12163776
23.	5-N7	2.575	CONNECTOR, SW-HAZARD WRNG (PART OF 21) (10-WAY F W/LEADS) (2.535) (AC-DELCO #PT150)	99-02	Y	1	12101762
	5-N7	2.575	CONNECTOR, SW-HAZARD WRNG (PART OF 21) (10-WAY M W/LEADS) (2.535) (AC-DELCO #PT215)	99-02	Y	1	12101823
	5-N7	2.575	CONNECTOR, SW-HAZARD WRNG (PART OF 21) (10-WAY M W/LEADS) (2.535) (AC-DELCO #PT215)	02	YY67	1	12101823
24.	5-N7	2.575	SWITCH, HAZARD WRNG	99-02	Y (EXC VD1)	1	10406626
	5-N7	2.575	SWITCH, HAZARD WRNG	99-02	Y (VD1) (EXPORT)	1	10406627
25.	5-M26	2.485	SENSOR, DAYTIME RUNNING LP AMB LGT	89-02	Y (T82, Z49)	1	12450121
	5-M26	2.485	CONNECTOR, SEN-DAYTIME RUNNING LP AMB LGT (PART OF 21) (2-WAY F W/LEADS W/INDEX TAB OTR EDGE OF CAVITY B) (2.535) (AC-DELCO #PT146)	99-00	Y	1	12085535
	5-M10	2.461	CONNECTOR, SEN-HDLP AUTO CONT AMB LGT (PART OF 21) (2-WAY F W/LEADS W/INDEX TAB OTR EDGE OF CAVITY B) (2.535) (AC-DELCO #PT146)	01-02	YY67	1	12085535
26.		N.S.	CLUSTER, INST (CLUSTERS SOLD THRU ACD REPAIR CENTERS)		....		
	5-N17	9.768	CONNECTOR, DISPLAY-DRVR INFO (PART OF 21) (34-WAY F) (9.735)	99-01	Y	1	12065803
	5-N17	9.768	CONNECTOR, DISPLAY-DRVR INFO (PART OF 21) (34-WAY F) (9.735)	02	YY67	1	12065803
27.	5-N8	7.440	SENSOR, VEH YAW	99-00	Y (JL4)	1	10277333
	5-N8	7.440	SENSOR, VEH YAW	01-02	Y	1	10277333
28.		8.917	NUT, HEX W/CON WA M6X1X5.5 (9) 7111M 16-OD (VEH YAW SEN)	99-02	.....	2	11514517
29.	5-A18	10.260	COMPARTMENT, I/P (W/DR) (BLACK)	99	Y (19I)	1	10437318
	5-A18	10.260	COMPARTMENT, I/P (W/DR) (PEWTER)	99	Y07-67 (92I)	1	10437319
	5-A18	10.260	COMPARTMENT, I/P (W/DR)	99	Y07-67 (94I)	1	10416644

cardiagn.com

						1Y10-048
5-A18	10.260	COMPARTMENT, I/P (W/DR) (RED) (W/O MANUAL PSIR SUPPRESSION SWITCH 2ND DES SEE 10437316)	00	Y07-67 (C88, 70I) (1ST DES)	1	10408529
5-A18	10.260	COMPARTMENT, I/P (W/DR) (BLACK) (W/MANUAL PSIR SUPPRESSION SWITCH, FOR 1 DES SEE 10437318)	00	Y (19I) (EXC C88) (2ND DES)	1	10437313
5-A18	10.260	COMPARTMENT, I/P (W/DR) (OAK) (W/MANUAL PSIR SUPPRESSION SWITCH, FOR 1ST DES SEE 10437320)	00	Y07-67 (67I) (EXC C88) (2ND DES)	1	10437315
5-A18	10.260	COMPARTMENT, I/P (W/DR) (RED) (W/MANUAL PSIR SUPPRESSION SWITCH 1ST DES SEE 10437321)	00	Y07-67 (70I) (EXC C88) (2ND DES)	1	10437316
5-A18	10.260	COMPARTMENT, I/P (W/DR) (BLACK) (W/O MANUAL PSIR SUPPRESSION SWITCH, FOR 2ND DES SEE 10437313)	00	Y (C88, 19I) (1ST DES) .	1	10437318
5-A18	10.260	COMPARTMENT, I/P (W/DR) (PEWTER) (W/O MANUAL PSIR SUPPRESSION SWITCH, FOR 2ND DES SEE 10437314)	00	Y07-67 (C88, 19I) (1ST DES)	1	10437319
5-A18	10.260	COMPARTMENT, I/P (W/DR) (OAK) (W/O MANUAL PSIR SUPPRESSION SWITCH, FOR 2ND DES SEE 10437315)	00	Y07-67 (C88, 67I) (1ST DES)	1	10437320
5-A18	10.260	COMPARTMENT, I/P (W/DR) (RED)	01-02	Y07-67 (C88, 70I)	1	10408529
5-A18	10.260	COMPARTMENT, I/P (W/DR) (BLACK)	01-02	Y (19I) (EXC C88)	1	10437313
5-A18	10.260	COMPARTMENT, I/P (W/DR) (OAK)	01-02	Y07-67 (67I) (EXC C88)	1	10437315
5-A18	10.260	COMPARTMENT, I/P (W/DR) (RED)	01-02	Y (70I) (EXC C88)	1	10437316
5-A18	10.260	COMPARTMENT, I/P (W/DR) (OAK)	01-02	Y (C88, 67I)	1	10437320
5-A18	10.260	COMPARTMENT, I/P (W/DR) (BLACK)	01-02	Y (C88, 19I)	1	10437318
5-A18	10.260	COMPARTMENT, I/P (W/DR) (PEWTER)	01-02	Y (C88, 92I)	1	10437319
5-A18	10.260	COMPARTMENT, I/P (W/DR) (REMOVE SNAP COVER IF PSIR SUPRESSION SWITCH IS PRESENT.) (PEWTER) (W/MANUAL PSIR SUPPRESSION SWITCH, FOR 1ST DES SEE 10437319)	00	Y07-67 (92I) (EXC C88) (2ND DES)	1	10437319
5-A18	10.260	COMPARTMENT, I/P (W/DR) (REMOVE SNAP COVER IF PSIR SUPRESSION SWITCH IS PRESENT.) (PEWTER)	01-02	Y07-67 (92I) (EXC C88)	1	10437319

RPO DEFINITIONS
AK5 – RESTRAINT SYSTEM,FRONT SEAT,INFLATABLE,DRIVER AND PASSENGER
CJ2 – HVAC SYSTEM AIR CONDITIONER FRT, AUTO TEMP CONT, AUX TEMP CONT
C60 – AIR CONDITIONER,FRONT,MANUAL CONTROLS
C88 – SWITCH INFL RST I/P MDL MAN SUPPRESSION – – DELETE

cardiagn.com

JL4 – CONTROL ACTIVE BRAKE
MM6 – TRANSMISSION MAN 6 SPD, BORG WARNER, 85MM, 1ST 2.66, 6TH 0.50, O/D
M30 – TRANSMISSION,AUTOMATIC 4 SPEED,4L60E,ELECTRONIC
N37 – STEERING COLUMN,TILT AND TELESCOPING
T82 – HEADLAMPS,AUTOMATIC ON/OFF CONTROL
T89 – LAMP,TAIL AND STOP(EXPORT)
T96 – LAMP,FRONT FOG
UK1 – RADIO FREQUENCY(JAPANESE)
UL0 – RADIO AM/FM STEREO, SEEK/SCAN, AUTO REV MUSIC SEARCH CASS, AUTO TONE, CLOCK, ETR.
UL2 – RADIO FREQUENCY(EUROPEAN)
UN0 – RADIO,AM/FM,STEREO,SEEK/SCAN,COMPACT DISC,AUTO TONE,CLOCK,ETR
UQ5 – SPEAKER SYSTEM,4,DUAL FRONT DOOR MOUNTED,DUAL EXTENDED RANGE QUARTER MOUNTED
UZ6 – SPEAKER SYSTEM 6, QUAD FRT DR MTD, DUAL QTR MTD
VD1 – PROVISION OPTIONS,EUROPE(EXPORT)
Z49 – MANDATORY CANADIAN BASE EQUIPMENT MODIFICATIONS(CANADIAN)
19I – INTERIOR TRIM,BLACK
67I – INTERIOR TRIM,CAMEL
70I – INTERIOR TRIM,TORCH RED
92I – INTERIOR TRIM SHALE/PEWTER
94I – INTERIOR TRIM FIRETHORN RED (97)

cardiagn.com

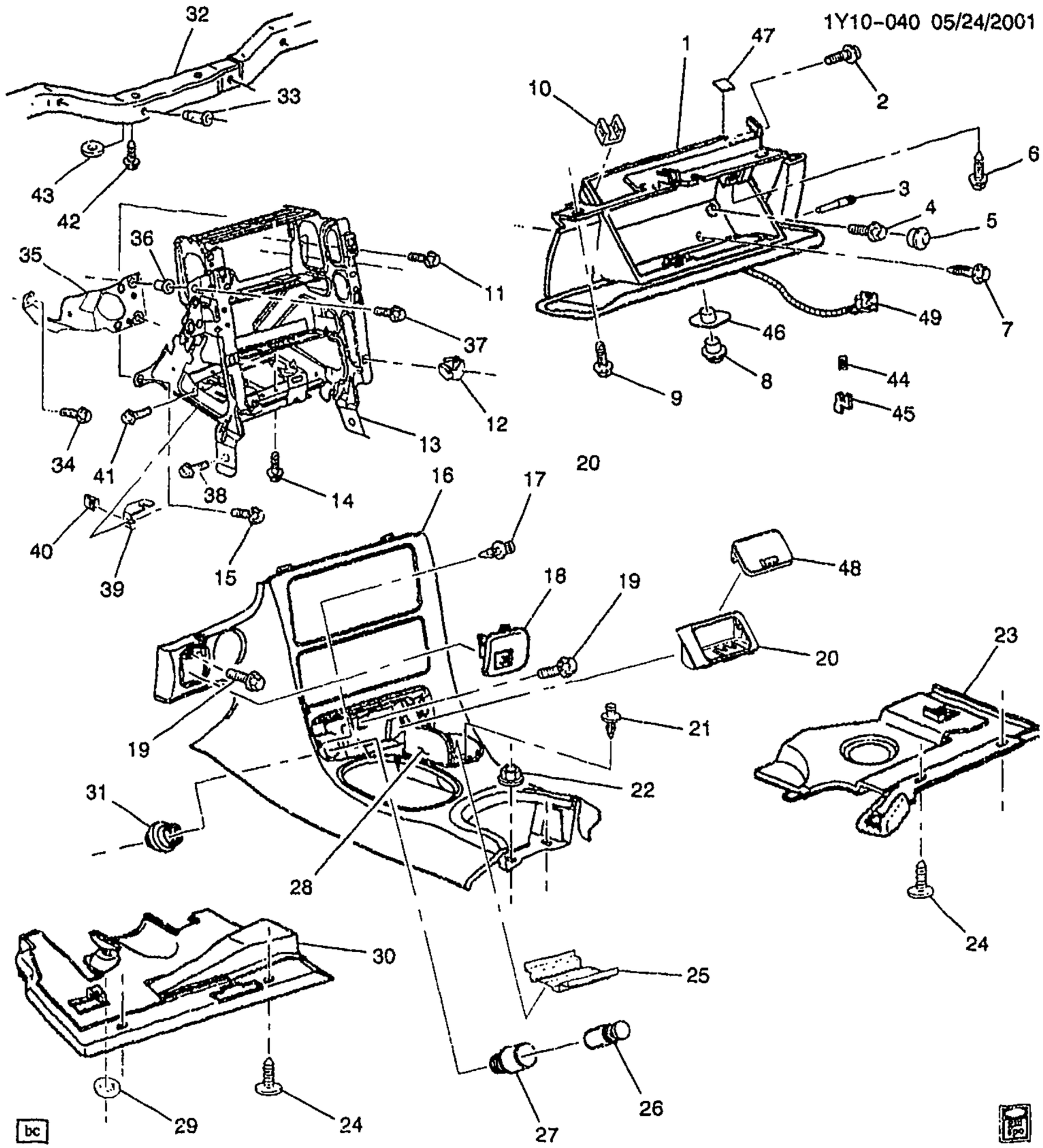

1Y10-040

2000-2002 Y INSTRUMENT PANEL PART 2 (COMPARTMENT/INSULATORS/TRIM PLATES)

1.	5-A18	10.260	COMPARTMENT, I/P (W/DR) (INCLS 3, 10, 46, 47) (RED) (W/O MANUAL PSIR SUPPRESSION SWITCH 2ND DES SEE 10437316)	00	Y07-67 (C88, 70I) (1ST DES)	1 10408529

cardiagn.com

						1Y10-040
5-A18	10.260	COMPARTMENT, I/P (W/DR) (INCLS 3, 10, 46, 47) (BLACK) (W/MANUAL PSIR SUPPRESSION SWITCH, FOR 1 DES SEE 10437318)	00	Y (19I) (EXC C88) (2ND DES)	1	10437313
5-A18	10.260	COMPARTMENT, I/P (W/DR) (INCLS 3, 10, 46, 47) (OAK) (W/MANUAL PSIR SUPPRESSION SWITCH, FOR 1ST DES SEE 10437320)	00	Y07-67 (67I) (EXC C88) (2ND DES)	1	10437315
5-A18	10.260	COMPARTMENT, I/P (W/DR) (INCLS 3, 10, 46, 47) (RED) (W/MANUAL PSIR SUPPRESSION SWITCH 1ST DES SEE 10437321)	00	Y07-67 (70I) (EXC C88) (2ND DES)	1	10437316
5-A18	10.260	COMPARTMENT, I/P (W/DR) (INCLS 3, 10, 46, 47) (BLACK) (W/O MANUAL PSIR SUPPRESSION SWITCH, FOR 2ND DES SEE 10437313)	00	Y (C88, 19I) (1ST DES) .	1	10437318
5-A18	10.260	COMPARTMENT, I/P (W/DR) (INCLS 3, 10, 46, 47) (PEWTER) (W/O MANUAL PSIR SUPPRESSION SWITCH, FOR 2ND DES SEE 10437314)	00	Y07-67 (C88, 19I) (1ST DES)	1	10437319
5-A18	10.260	COMPARTMENT, I/P (W/DR) (INCLS 3, 10, 46, 47) (OAK) (W/O MANUAL PSIR SUPPRESSION SWITCH, FOR 2ND DES SEE 10437315)	00	Y07-67 (C88, 67I) (1ST DES)	1	10437320
5-A18	10.260	COMPARTMENT, I/P (W/DR) (INCLS 3, 10, 46, 47) (RED)	01-02	Y07-67 (C88, 70I)	1	10408529
5-A18	10.260	COMPARTMENT, I/P (W/DR) (INCLS 3, 10, 46, 47) (BLACK) ...	01-02	Y (19I) (EXC C88)	1	10437313
5-A18	10.260	COMPARTMENT, I/P (W/DR) (INCLS 3, 10, 46, 47) (OAK)	01-02	Y07-67 (67I) (EXC C88)	1	10437315
5-A18	10.260	COMPARTMENT, I/P (W/DR) (INCLS 3, 10, 46, 47) (RED)	01-02	Y (70I) (EXC C88)	1	10437316
5-A18	10.260	COMPARTMENT, I/P (W/DR) (INCLS 3, 10, 46, 47) (BLACK) ...	01-02	Y (C88, 19I)	1	10437318
5-A18	10.260	COMPARTMENT, I/P (W/DR) (INCLS 3, 10, 46, 47) (OAK)	01-02	Y (C88, 67I)	1	10437320
5-A18	10.260	COMPARTMENT, I/P (W/DR) (INCLS 3, 10, 46, 47) (PEWTER) .	01-02	Y (C88, 92I)	1	10437319
5-A18	10.260	COMPARTMENT, I/P (W/DR) (REMOVE SNAP COVER IF PSIR SUPRESSION SWITCH IS PRESENT.) (INCLS 3, 10, 46, 47) (PEWTER) (W/MANUAL PSIR SUPPRESSION SWITCH, FOR 1ST DES SEE 10437319)	00	Y07-67 (92I) (EXC C88) (2ND DES)	1	10437319
5-A18	10.260	COMPARTMENT, I/P (W/DR) (REMOVE SNAP COVER IF PSIR SUPRESSION SWITCH IS PRESENT.) (INCLS 3, 10, 46, 47) (PEWTER)	01-02	Y07-67 (92I) (EXC C88)	1	10437319

cardiagn.com

							1Y10-040
2.		8.977	BOLT, HWH, M4.2X1.41X20, 7.8 OD, ST, 6172M, ZN BR, TAP, DRILL PT (AT PASS INFL RST I/P MDL BRKT)	00-02		1	11513568
3.	5-A19	10.262	PIN, I/P COMPT DR HGE (PART OF 1)	00-02	Y	2	10280060
4.		8.900	SCREW, M6X1X30, 11 THD, 12.5 OD, 4.8, 6047M, P-PT (TO LWR TIE BAR-POSN #1)	00-02		2	11508128
5.	5-A18	10.256	PLUG, I/P COMPT ACC HOLE (34.8 OD 2.5 THK) (POLYETHYLENE) (8.010)	00-02	Y	2	22539445
6.		8.977	SCREW, HEX W/FL WA M4.2X2.25X20 TAP POR (UPR)	00-02		4	11508443
7.		8.900	BOLT, HEX W/CON WA M6X1X40 9.8 PC AC PT17 OD (LWR)	00-02		2	11503827
8.	5-A19	10.266	CYLINDER, I/P COMPT DR LK (UNCODED) (INCLS 44, 45)	00-02	Y	1	12534394
9.		8.977	SCREW, HEX W/FL WA M4.2X2.25X20 TAP POR (TO PAD ASM-POSN #4)	00-02		3	11508443
10.	5-A19	10.263	BUMPER, I/P COMPT DR STOP (PART OF 1)	00-02	Y	2	10285822
11.		8.900	BOLT/SCREW, HEX W/FL WA 17 OD, M6X1X20, 9.8, 4345M, DOG PT (POSN #2 UPR/POSN #3 LWR) (I/P CTR SUPT AT I/P PASS KNEE BOLSTER BRKT)	00-02		2	11515704
12.	5-A16	10.230	NUT, I/P CTR SUPT BRKT (PART OF 13) (4.2X1.41 TAPPING) (SPL) (3.430)	00-02	Y	7	25536302
13.	5-A16	10.230	BRACKET, I/P CTR SUPT (INCLS 12)	00-02	Y	1	10433229
14.		N.S.	STUD, I/P ACSRY TR-TO TUNNEL				
15.		8.900	SCREW, M6X1X30, 11 THD, 12.5 OD, 4.8, 6047M, P-PT (I/P CTR SUPT (AT I/P TIE BAR))	00-02		2	11508128
16.	5-A17	10.252	PLATE, I/P ACSRY TR (INCLS 17, 21, 25, 28)	00-02	Y	1	10407815
17.	5-N17	12.009	RETAINER, I/P ASHTRAY (PART OF 16) (10.242)	00-02	Y	2	10401217
18.	5-A17	10.252	GRILLE, I/P ACSRY TR PLT	00-02	Y	1	10268306
19.	5-A17	10.252	BOLT, I/P ACSRY TR PLT	00-02	Y	3	10400761
20.	5-N17	12.009	ASHTRAY, I/P (INCLS 48)	00-02	Y	1	10247681
21.	5-A18	10.260	RETAINER, I/P CUP HLDR (PART OF 16) (10.242)	00-02	Y	2	10401217
22.		8.917	NUT, HEX W/CON WA 6X1X5.5 16-OD ZP 9 (I/P ACSRY TR PLT)	00-02		2	11517293
23.	5-A16	10.230	INSULATOR, I/P (BLACK)	00-02	Y (19I)	RH	10409462
	5-A16	10.230	INSULATOR, I/P (PEWTER)	00-02	Y (92I)	RH	10409463
	5-A16	10.230	INSULATOR, I/P (OAK)	00-02	Y07-67 (67I)	RH	10409465
	5-A16	10.230	INSULATOR, I/P (RED)	00	Y07-67 (70I)	RH	10409466
	5-A16	10.230	INSULATOR, I/P (RED)	01-02	Y (70I)	RH	10409466
24.	5-A16	10.230	RETAINER, I/P INSL (PEWTER) (14.640)	00-02	Y	LH	10279623
	5-A16	10.230	RETAINER, I/P INSL (PEWTER) (14.640)	00-02	Y	RH	10279623

cardiagn.com

							1Y10-040
25.	5-A18	10.260	MAT, I/P CUP HLDR (PART OF 16)	00-02	Y	1	10274116
26.	5-N15	9.709	LIGHTER, CIG (BLACK) (CASCO) (W/LARGE, PLASTIC KNOB)	00-02	Y	1	11516140
27.	5-N15	9.709	HOUSING, C/LTR (MATES W/CONN 12085504, (CASCO) 1-PIN CONN)	00-02	Y	1	11516142
28.	5-A18	10.260	DOOR, I/P CUP HLDR (PART OF 16)	00-02	Y	1	10268305
29.		8.921	NUT, METRIC PUSH-ON BOLT RETAINING SPRING (I/P INSL)	00-02		1	10009923
30.	5-A16	10.230	INSULATOR, I/P	00-02	Y	LH	10421513
31.	5-N15	9.709	RETAINER, C/LTR HSG (CASCO)	00-02	Y	1	11516144
32.	5-A16	10.230	BAR, I/P TIE (#47)	00-02	Y	1	10425866
33.	5-A16	10.230	NUT, I/P LWR TIE BAR (4.665)	00-02	Y	10	10281487
34.		8.977	BOLT, HWH, M4.2X1.41X20, 7.8 OD, ST, 6172M, ZN BR, TAP, DRILL PT (IGN & START SW)	00-02		1	11513568
35.	5-M9	2.188	HOUSING, IGN & START SW (INCLS 36)	00-02	Y	1	10404727
36.		8.915	NUT, M6X1, 10MM HOLE, 12.9 OD, 4345M (PART OF 35)	00-02		2	11516763
		8.915	NUT, M6X1, 10MM HOLE, 12.9 OD, 4345M (PART OF 35)	00-02		2	11516763
37.		8.900	BOLT/SCREW, HEX W/FL WA 17 OD, M6X1X20, 9.8, 4345M, DOG PT (I/P CTR SUPT BRKT) (POSN #1)	00-02		2	11515704
38.		8.900	SCREW, M6X1X30, 11 THD, 12.5 OD, 4.8, 6047M, P-PT (I/P CTR SUPT AT FLR PNL)	00-02		2	11508128
39.	5-A16	10.230	BRACKET, I/P CTR SUPT	00-02	Y	1	10409133
40.		8.921	NUT, U TYPE, MULTI THD, PREV TORQ, M4.2X1.41TAP, 8.1REACH, 0.65-3.80 PNLS 1065 PZOR (I/P LWR BRKT) (AC-DELCO #11513599)	00-02		1	11513599
41.		8.977	SCREW, HEX W/FL WA M4.2X2.25X20 TAP POR (I/P CTR SUPT BRKT) (POSN #2)	00-02		1	11508443
42.		8.977	BOLT, HEX W/WA, M6X1X35, 9.8, POR, 24 OD, ABPT (I/P TIE BAR)	00-02		2	11513947
43.	5-A16	10.230	SPACER, I/P (7.832)	00-02	Y	AR	10149281
44.	5-A19	10.266	SPRING, I/P COMPT DR LK CYL TUMB (PART OF 8) (SNAP IN) (10.268)	00-02	Y	4	6259315
	5-A19	10.266	SPRING, I/P COMPT DR LK CYL ANTI-ROTATION TUMB (PART OF 8) (ANTI-RATTLE)	00-02	Y	1	20496065
45.	5-A19	10.266	TUMBLER, I/P COMPT DR LK CYL (PART OF 8) (#1)	00-02	Y	AR	12522877
	5-A19	10.266	TUMBLER, I/P COMPT DR LK CYL (PART OF 8) (#2)	00-02	Y	AR	12522878
	5-A19	10.266	TUMBLER, I/P COMPT DR LK CYL (PART OF 8) (#3)	00-02	Y	AR	12522879
	5-A19	10.266	TUMBLER, I/P COMPT DR LK CYL (PART OF 8) (#4)	00-02	Y	AR	12522880

cardiagn.com

							1Y10-040
	5-A19	10.266	TUMBLER, I/P COMPT DR LK CYL ANTI-ROTATION (PART OF 8)	00-02	Y	1	12522881
46.	5-A19	10.266	LOCK, I/P COMPT DR (PART OF 1) (BLACK)	00-02	Y (19I)	1	22658999
	5-A19	10.266	LOCK, I/P COMPT DR (PART OF 1) (PEWTER)	00-02	Y07-67 (92I)	1	22659000
	5-A19	10.266	LOCK, I/P COMPT DR (PART OF 1) (CAMEL)	00-01	Y07-67 (67I)	1	22659002
	5-A19	10.266	LOCK, I/P COMPT DR (PART OF 1) (RED)	00-01	Y07-67 (70I)	1	22659001
	5-A19	10.266	LOCK, I/P COMPT DR (PART OF 1) (TORCH RED)	00-01	Y07-67 (70I)	1	22674760
	5-A19	10.266	LOCK, I/P COMPT DR (PART OF 1) (PEWTER)	02	Y07-67 (67I)	1	22659000
	5-A19	10.266	LOCK, I/P COMPT DR (PART OF 1) (CAMEL)	02	Y (67I)	1	22659002
	5-A19	10.266	LOCK, I/P COMPT DR (PART OF 1) (CAMEL)	02	Y (92I)	1	22659002
	5-A19	10.266	LOCK, I/P COMPT DR (PART OF 1) (TORCH RED)	02	Y (70I)	1	22674760
47.	5-A19	10.263	BUMPER, I/P COMPT (PART OF 1)	00-02	Y	1	10280061
48.		N.S.	COVER, I/P ASHTRAY (PART OF 20)		.....		
49.	5-N26	14.865	SWITCH, I/P INFL RST MDL	00-02	Y (EXC C88)	1	10440761
	5-N26	14.865	CONNECTOR, SW-INFL RST I/P MDL (6-WAY FEMALE M/P 150) (W/LEADS) (16.712) (AC-DELCO #PT1141)	00	Y07 (M30, CJ2, JL4) (EXC T89)	1	15306014
	5-N26	14.865	CONNECTOR, SW-INFL RST I/P MDL (2-WAY F W/LEADS W/INDEX TAB OTR EDGE OF CAVITY B) (2.535) (AC-DELCO #PT146)	01-02	YY	1	12085535
	5-N26	14.865	CONNECTOR, SW-INFL RST I/P MDL (2-WAY F W/LEADS W/INDEX TAB OTR EDGE OF CAVITY B) (2.535) (AC-DELCO #PT146)	02	YY67 (M30, CJ2, N37) (EXC T89)	1	12085535
	5-N26	14.865	CONNECTOR, SW-INFL RST I/P MDL (6-WAY FEMALE M/P 150 (W/LEADS) .) (6-WAY FEMALE M/P 150) (W/LEADS) (16.712) (AC-DELCO #PT1141)	01-02	YY67	1	15306014

RPO DEFINITIONS

CJ2 – HVAC SYSTEM AIR CONDITIONER FRT, AUTO TEMP CONT, AUX TEMP CONT
C88 -- SWITCH INFL RST I/P MDL MAN SUPPRESSION -- DELETE
JL4 – CONTROL ACTIVE BRAKE
M30 – TRANSMISSION,AUTOMATIC 4 SPEED 4L 60E,ELECTRONIC
N37 -- STEERING COLUMN,TILT AND TELESCOPIC
T89 – LAMP,TAIL AND STOP(EXPORT)
19I – INTERIOR TRIM,BLACK
67I – INTERIOR TRIM,CAMEL
70I – INTERIOR TRIM,TORCH RED
92I – INTERIOR TRIM SHALE/PEWTER

cardiagn.com

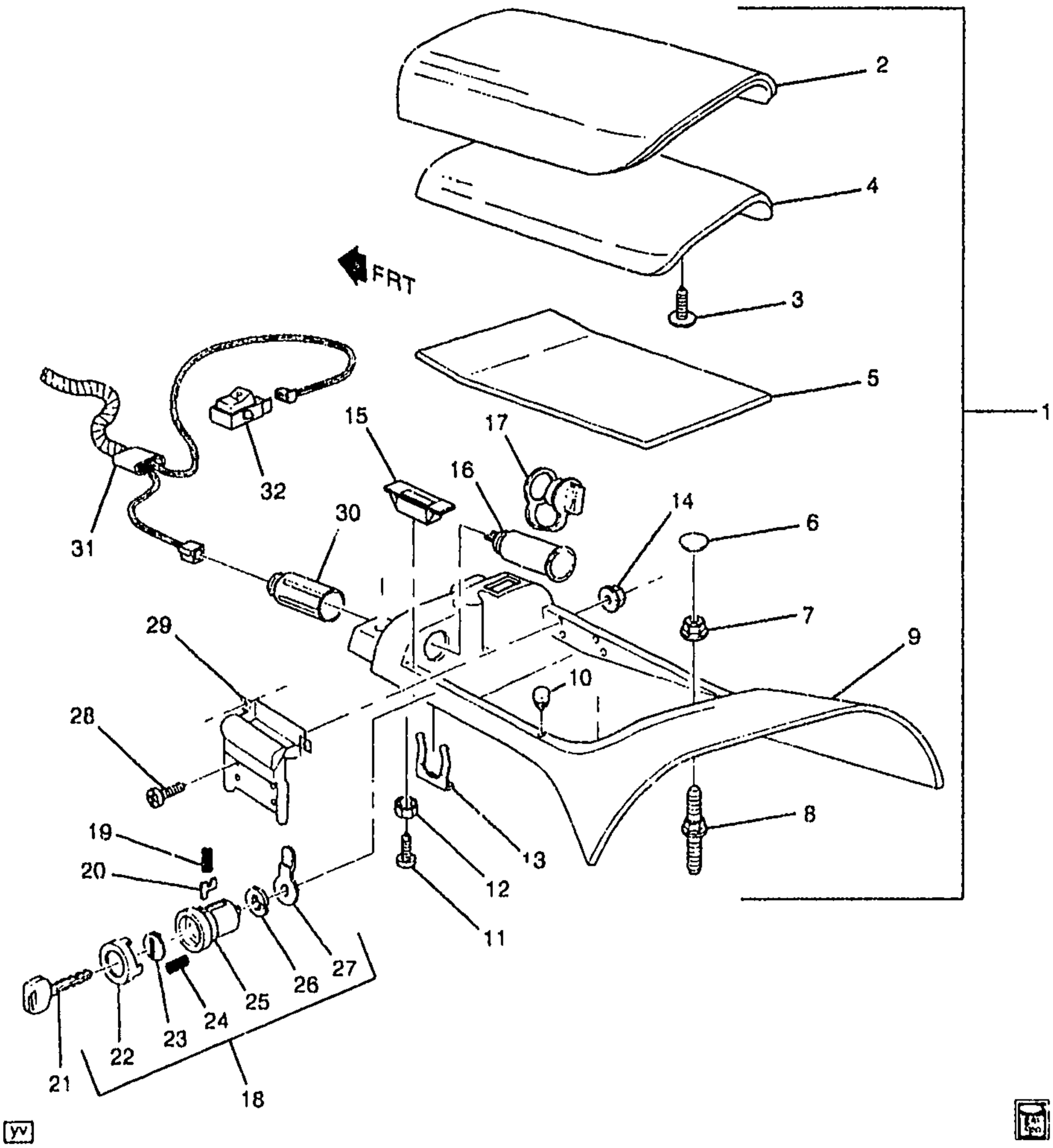

1Y10-030

1997-2002 Y CONSOLE/SEAT SEPARATOR

1.		N.S.	CONSOLE, F/FLR (CPS) (INCLS 2-5, 9-12, 14-15, 28-29)		.....		
2.	5-A17	10.242	DOOR, F/FLR CNSL COMPT (PART OF 1)	97-02	Y	1	10247708
		N.S.	FOUNDATION, F/FLR CNSL COMPT DR (PART OF 1)		.....		

cardiagn.com

							1Y10-030
3.		8.977	SCREW-ROUNDWASHER M4.2X1.4X13, 8.63OD, 6010M, 6138M, C/R, TAP (F/FLR CNSL) (PART OF 1)	97-02		5	11515893
4.		N.S.	PANEL, F/FLR CNSL COMPT DR INR (PART OF 1)				
5.	5-A17	10.240	PROTECTOR, F/FLR CNSL COMPT (PART OF 1) (BLACK)	97-02	Y	1	10247709
6.	5-A17	10.240	FILLER, F/FLR CNSL COMPT	97-02	Y	2	10247710
7.		8.917	NUT, HEX W/CON WA M6X1X5.5 (9) 7111M 16-OD (F/FLR CNSL COMPT)	97-02		2	11514517
8.		N.S.	STUD, F/FLR CNSL				
9.	5-A17	10.240	CONSOLE, F/FLR (PART OF 1)	97-02	Y	1	12458556
10.	5-A17	10.240	BUMPER, F/FLR COMPT DR (PART OF 1) (10.242)	97-00	Y	2	10284921
	5-A17	10.240	BUMPER, F/FLR COMPT DR (PART OF 1)	01-02	Y	2	10313054
11.	5-A20	10.268	BOLT, F/FLR COMPT DR LAT STKR (PART OF 1) (M4.2X1.41X12) (10.685)	97-02	Y	2	3539991
12.	5-A17	10.242	NUT, F/FLR CNSL COMPT DR HGE (PART OF 1) (10.252)	97-02	Y	4	10175813
13.	5-A20	10.267	RETAINER, F/FLR COMPT DR LK CYL	97-02	Y	1	10298275
14.	5-A20	10.268	NUT, F/FLR COMPT DR LAT STKR (PART OF 1) (10.252)	97-02	Y	2	10175813
15.	5-A20	10.268	LATCH, F/FLR CNSL COMPT DR (PART OF 1)	97-02	Y	1	10268314
16.	5-N15	9.709	RECEPTACLE, ACSRY PWR	97-98	Y	1	10202970
	5-N15	9.709	RECEPTACLE, ACSRY PWR (USED IN 23.0MM DIA HOLE FOR AUX PWR OUTLET, FOR 2ND DES SEE #12450044)	99	Y (1ST DES)	1	10202970
	5-N15	9.709	RECEPTACLE, ACSRY PWR (CAVITY A IS B+, CAVITY C IS GND, CAVITY B IS FOR LIGHTED RING) (USED IN 28.0MM SLOTTED HOLE FOR AUX PWR OUTLET, FOR 1ST DES SEE #10202970)	99	Y (2ND DES)	1	12450044
	5-N15	9.709	RECEPTACLE, ACSRY PWR (CAVITY A IS B+, CAVITY C IS GND, CAVITY B IS FOR LIGHTED RING)	00-02	Y	1	12450044
17.	5-N15	9.709	PLUG, ACSRY PWR RCPT OPG	97-99	Y	1	12450056
	5-N15	9.709	RETAINER, ACSRY PWR RCPT (BLACK) (WITH CAP)	00-02	Y	1	12450047
18.	5-A19	10.266	CYLINDER, F/FLR CNSL COMPT DR LK (UNCODED)	97-02	Y	1	12523746
19.	5-A19	10.266	SPRING, F/FLR CNSL COMPT DR LK CYL TUMB (SNAP IN) (10.268)	97-02	Y	5	6259315
20.	5-A19	10.266	TUMBLER, F/FLR CNSL COMPT DR LK CYL (#1)	97-02	Y	1	12522877
	5-A19	10.266	TUMBLER, F/FLR CNSL COMPT DR LK CYL (#2)	97-02	Y	1	12522878

cardiagn.com

							1Y10--030
	5-A19	10.266	TUMBLER, F/FLR CNSL COMPT DR LK CYL (#3)	97-02	Y	1	12522879
	5-A19	10.266	TUMBLER, F/FLR CNSL COMPT DR LK CYL (#4)	97-02	Y	1	12522880
21.	5-M9	2.187	KEY, DR LK & IGN LK (UNCODED) (RESISTOR CODE #10)	97-02	Y	1	2852564
	5-M9	2.187	KEY, DR LK & IGN LK (UNCODED) (RESISTOR CODE #11)	97-02	Y	1	2852565
	5-M9	2.187	KEY, DR LK & IGN LK (UNCODED) (RESISTOR CODE #12)	97-02	Y	1	2852566
	5-M9	2.187	KEY, DR LK & IGN LK (UNCODED) (RESISTOR CODE #13)	97-02	Y	1	2852567
	5-M9	2.187	KEY, DR LK & IGN LK (UNCODED) (RESISTOR CODE #14)	97-02	Y	1	2852568
	5-M9	2.187	KEY, DR LK & IGN LK (UNCODED) (RESISTOR CODE #15)	97-02	Y	1	2852569
	5-M9	2.187	KEY, DR LK & IGN LK (UNCODED) (RESISTOR CODE #2)	97-02	Y	1	2852556
	5-M9	2.187	KEY, DR LK & IGN LK (UNCODED) (RESISTOR CODE #3)	97-02	Y	1	2852557
	5-M9	2.187	KEY, DR LK & IGN LK (UNCODED) (RESISTOR CODE #4)	97-02	Y	1	2852558
	5-M9	2.187	KEY, DR LK & IGN LK (UNCODED) (RESISTOR CODE #5)	97-02	Y	1	2852559
	5-M9	2.187	KEY, DR LK & IGN LK (UNCODED) (RESISTOR CODE #6)	97-02	Y	1	2852560
	5-M9	2.187	KEY, DR LK & IGN LK (UNCODED) (RESISTOR CODE #7)	97-02	Y	1	2852561
	5-M9	2.187	KEY, DR LK & IGN LK (UNCODED) (RESISTOR CODE #8)	97-02	Y	1	2852562
	5-M9	2.187	KEY, DR LK & IGN LK (UNCODED) (RESISTOR CODE #9)	97-02	Y	1	2852563
22.	5-A20	10.267	CAP, F/FLR CNSL COMPT DR LK CYL (12.248)	97-02	Y	1	20496886
23.	5-A19	10.266	SHUTTER, F/FLR CNSL COMPT DR LK CYL	97-02	Y	1	12534395
24.	5-A19	10.266	SPRING, F/FLR CNSL COMPT DR LK CYL SHUTTER (10.552)	97-02	Y	2	12503691
25.	5-A19	10.266	CYLINDER, F/FLR CNSL COMPT DR LK (UNCODED)	97-02	Y	1	12523746
26.	5-A20	10.268	RETAINER, F/FLR CNSL COMPT DR LK CYL LAT (12.945)	97-02	Y	1	20650814
27.	5-A20	10.268	LATCH, F/FLR CNSL COMPT DR LK CYL	97-02	Y	1	12534396

cardiagn.com

							1Y10-030
28.	5-A20	10.268	BOLT, F/FLR COMPT DR LAT STKR (PART OF 1) (M4.2X1.41X12) (10.685)	97-02	Y	2	3539991
29.	5-A17	10.242	HINGE, F/FLR CNSL COMPT DR (PART OF 1)	97-02	Y	1	10268321
30.	5-N15	9.709	RETAINER, ACSRY PWR RCPT ..	97-98	Y	1	10202971
	5-N15	9.709	RETAINER, ACSRY PWR RCPT (USED IN 23.0MM DIA HOLE FOR AUX PWR OUTLET, FOR 2ND DES SEE #12450047)	99	Y (1ST DES)	1	10202971
	5-N15	9.709	RETAINER, ACSRY PWR RCPT (BLACK) (WITH CAP) (USED IN 28.0MM SLOTTED HOLE FOR AUX PWR OUTLET, FOR 1ST DES SEE #10202971)	99	Y (2ND DES)	1	12450047
	5-N15	9.709	RETAINER, ACSRY PWR RCPT (BLACK) (WITH CAP)	00-02	Y	1	12450047
31.	5-M10	2.480	HARNESS, I/P WRG (SEE GROUP 10.00"INSTRUMENT PANEL PART 3" FOR DETAILED ILLUSTRATED VIEW)		.....		
	5-N15	9.709	CONNECTOR, RCPT-ACSRY PWR (2-WAY F) (W/LEADS) (2.530) (AC-DELCO #PT303) ...	97-98	Y	1	12102616
	5-N15	9.709	CONNECTOR, RCPT-ACSRY PWR (2-WAY F) (W/LEADS) (2.530) (AC-DELCO #PT303) (2-WAY F, FOR 2ND DES SEE 15305985 (PT1079)	99	Y (1ST DES)	1	12102616
	5-N15	9.709	CONNECTOR, RCPT-ACSRY PWR (3-WAY F, W/LEADS) (AC-DELCO #PT1079) (3-WAY F, FOR 1ST DES SEE 12102616 (PT303)	99	Y (2ND DES)	1	15305985
	5-N15	9.709	CONNECTOR, RCPT-ACSRY PWR (3-WAY FEMALE M/P 280 FLEX-LOCK (W/LEADS) .) (3-WAY F FLEX LOCK W/LEADS) (2.694) (AC-DELCO #PT756) ...	98-02	Y	1	12126486
	5-N15	9.709	CONNECTOR, RCPT-ACSRY PWR (3-WAY FEMALE M/P 280 FLXLK (W/LEADS) .) (3-WAY F, W/LEADS) (AC-DELCO #PT1079)	00-02	Y	1	15305985
	5-N15	9.709	CONNECTOR, RCPT-ACSRY PWR (3-WAY FEMALE M/P 280 FLEX-LOCK (W/LEADS) .) (3-WAY F FLEX LOCK W/LEADS) (2.694) (AC-DELCO #PT756) ...	01-02	YY67	1	12126486
	5-N15	9.709	CONNECTOR, RCPT-ACSRY PWR (3-WAY FEMALE M/P 280 FLXLK (W/LEADS) .) (3-WAY F, W/LEADS) (AC-DELCO #PT1079)	02	YY67 (M30, CJ2, N37) (EXC T89)	1	15305985
	5-N15	9.709	CONNECTOR, RCPT-ACSRY PWR (3-WAY MALE M/P 280 (W/O LEADS) .) (3-WAY M, W/O LEADS) (CLIP SLOT) (13.100) ...	98-02	Y	1	12129490

cardiagn.com

							1Y10-030
	5-N15	9.709	CONNECTOR, RCPT-ACSRY PWR (3-WAY MALE M/P 280 (W/O LEADS) . SHIPPED BULK FROM PACKARD.) (3-WAY M, W/O LEADS) (CLIP SLOT) (13.100)	02	YY67 (M30, CJ2, N37) (EXC T89)	1	12129490
	5-N7	3.028	CONNECTOR, SW-F/TNK FIL DR LK REL (5-WAY FEMALE M/P 280 (W/LEADS)) (BLACK) (5-WAY F) (W/LEADS) (M/P 280) (10.525) (AC-DELCO #PT795) ..	97-02	Y	1	12167129
32.	5-N7	3.028	SWITCH, F/TNK FIL DR LK REL ..	97-02	Y (EXC VD1)	1	10276017
	5-N19	12.243	SWITCH, F/TNK FIL DR LK REL (3.028)	97-02	Y (EXC VD1)	1	10276017
	5-N19	12.243	SWITCH, R/CMPT LID & FUEL FIL DR REL (AC-DELCO #D7007C)	97-02	Y (VD1) (EXPORT)	1	10280957
	5-N7	3.028	SWITCH, R/CMPT LID & FUEL FIL DR REL (12.243) (AC-DELCO #D7007C)	97-02	Y (VD1) (EXPORT)	1	10280957

RPO DEFINITIONS
CJ2 – HVAC SYSTEM AIR CONDITIONER FRT, AUTO TEMP CONT, AUX TEMP CONT
M30 – TRANSMISSION,AUTOMATIC 4 SPEED,4L60E,ELECTRONIC
N37 – STEERING COLUMN,TILT AND TELESCOPING
T89 – LAMP,TAIL AND STOP(EXPORT)
VD1 – PROVISION OPTIONS,EUROPE(EXPORT)

cardiagn.com

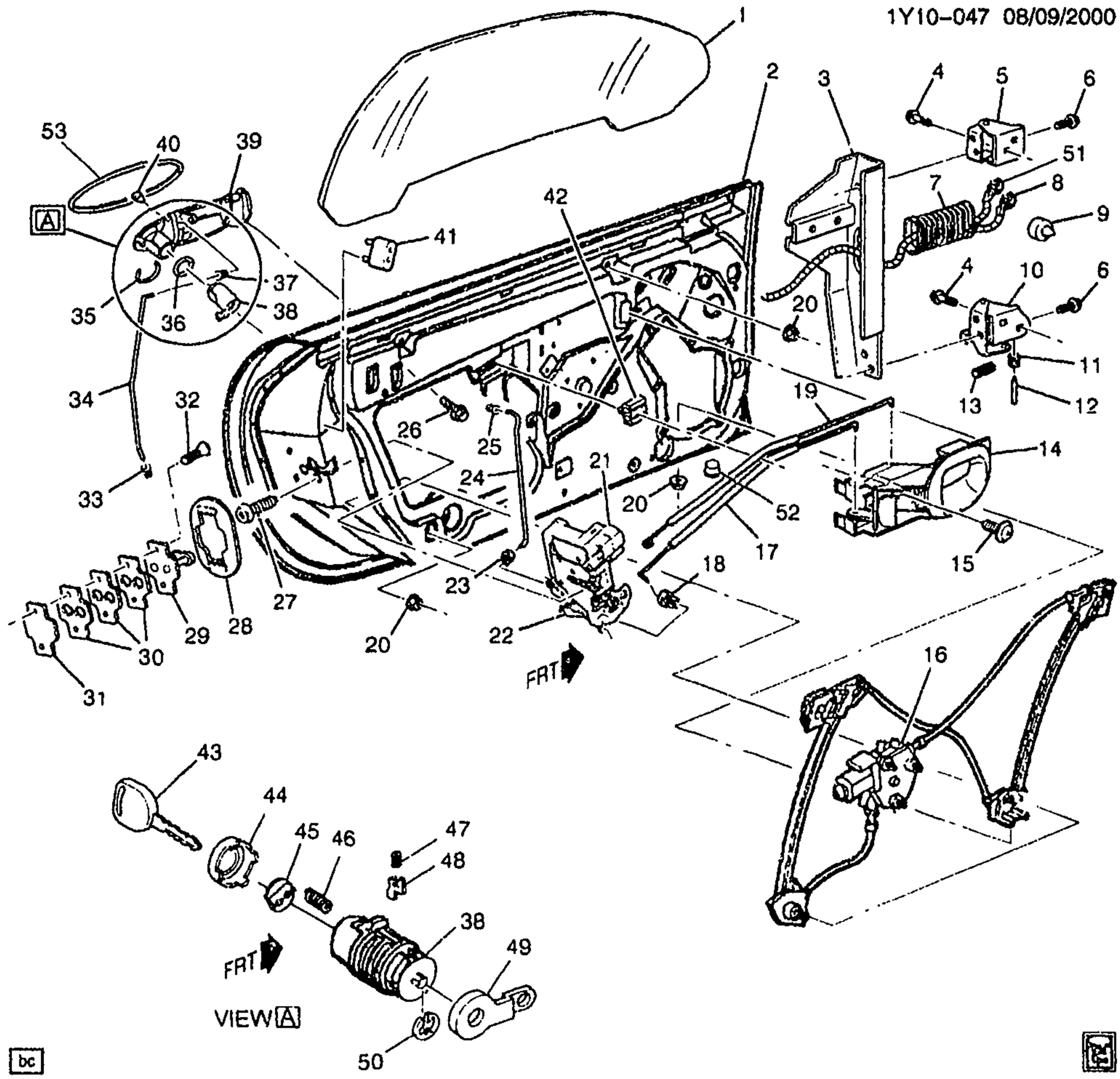

1Y10-047

1997 Y DOOR HARDWARE/FRONT

1.	5-A27	10.681	WINDOW, FRT S/D	97	Y	LH	10403189
	5-A27	10.681	WINDOW, FRT S/D	97	Y	RH	10403190
2.	5-A21	10.351	DOOR, FRT SI	97	Y	LH	10414235
	5-A21	10.351	DOOR, FRT SI	97	Y	RH	10414236
3.		N.S.	REINFORCEMENT, FRT S/D INR PNL HGE				
4.		8.900	BOLT-HEX, M8X1.25X30, 22 THD, 24MM OD, 9.8, 7114M (FRT S/D HGE (BODY SI))	97		8	11516594
5.	5-A21	10.450	HINGE, FRT S/D UPR (MODIFIED '95 GM10 HGE)	97	Y	LH	16632809

cardiagn.com

							1Y10-047
	5-A21	10.450	HINGE, FRT S/D UPR (MODIFIED '95 GM10 HGE)	97	Y	RH	16632810
6.		8.900	BOLT, HEX W/CON WA M8X1.25X35 9.8 7114M 24OD P-PT (FRT S/D HGE) (DR SI)	97		8	11516595
7.	5-N23	13.090	GROMMET, S/D WRG (LH & RH)	97	Y	2	10412644
		8.800	LUBRICANT, RUBBER 5 GAL (FRT S/D DR WRG HARN GROM)	97		AR	12345884
8.	5-N23	13.090	HARNESS, DR LK & O/S RRVIEW MIR MEMORY INTERFACE MDL WRG	97	Y	LH	12163314
	5-N23	13.090	HARNESS, DR LK & O/S RRVIEW MIR MEMORY INTERFACE MDL WRG	97	Y	RH	12163315
	5-N25	13.100	CONNECTOR, INLINE-TO DR LK ACTR MOT (2-WAY F) (W/LEADS) (W/SEAL) (2.535) (AC-DELCO #PT247)	97	Y	2	12101855
	5-A22	10.485	CONNECTOR, SW-DR LK (GREEN) (2-WAY F, W/LEADS) (2.535) (AC--DELCO #PT248)	97	Y	2	12101856
	5-B4	10.777	CONNECTOR, SW-SI WDO & M/FUNC (BLACK) (7-WAY F, W/LEADS) (2.535) (AC-DELCO #PT406)	97	Y	1	12102778
9.	5-A21	10.455	STOP, FRT S/D UPR	97	Y	2	10289774
10.	5-A21	10.454	HINGE, FRT S/D LWR (INCLS 11, 12, 13)	97	Y	LH	16634677
	5-A21	10.454	HINGE, FRT S/D LWR (INCLS 11, 12, 13)	97	Y	RH	16634678
11.	5-A21	10.455	ROLLER, FRT S/D CHK LINK (PART OF 10) (W/BUSH, LUB & ROLLER) (MAY REQUIRE LUBE P/N 1050109 TO EASE INSTALLATION)	97	Y	2	20058035
12.	5-A21	10.455	PIN, FRT S/D CHK LINK (PART OF 10)	97	Y	2	20262500
13.	5-A21	10.455	SPRING, FRT S/D LWR HGE (PART OF 10)	97	Y	2	20361482
14.	5-A24	10.512	HANDLE, FRT S/D I/S	97	Y	LH	10406533
	5-A24	10.512	HANDLE, FRT S/D I/S	97	Y	RH	10406534
15.	5-A24	10.512	BOLT, FRT S/D I/S HDL (10.268)	97	Y	2	10281420
16.	5-B5	10.783	REGULATOR, FRT S/D WDO (W/MOTOR)	97	Y	RH	10417573
	5-B5	10.783	REGULATOR, FRT S/D WDO	97	Y	LH	10446574
	5-B5	10.783	CONNECTOR, MOT-WDO REG (AC-DELCO #PT1044)	97	Y	1	15305992
17.	5-A26	10.563	ROD, FRT S/D LKG	97	Y	LH	10233183
	5-A26	10.563	ROD, FRT S/D LKG	97	Y	RH	10233184
18.	5-A24	10.515	CLIP, FRT S/D I/S HDL ROD (AT I/S HANDLE) (ROD TO LATCH) (YELLOW) (10.527)	97	Y	2	16633853
	5-A24	10.515	CLIP, FRT S/D I/S HDL ROD (PART OF LOCK ASM) (ROD TO LATCH) (YELLOW) (10.527)	97	Y	2	16633853
19.	5-A26	10.563	ROD, FRT S/D I/S HDL	97	Y	LH	10233181
	5-A26	10.563	ROD, FRT S/D I/S HDL	97	Y	RH	10233182

cardiagn.com

							1Y10–047
20.		8.917	NUT, HEX W/CON WA, 24 OD, M6X1X5.6, 9M, PZOR (FRT S/D WDO REG)	97		14	11514275
21.		N.S.	ACTUATOR KIT, FRT S/D LK (PART OF 22)				
22.	5–A22	10.470	LOCK, FRT S/D (INCLS 21, 23, 33) (INCLS THEFT DET SWITCH & ACTUATOR)	97	Y	RH	16636582
	5–A22	10.470	LOCK, FRT S/D (INCLS 21, 23, 33)	97	Y	LH	16640975
23.	5–A24	10.515	CLIP, FRT S/D I/S HDL ROD (AT I/S HANDLE) (ROD TO HDL) (PART OF 22) (YELLOW) (10.527)	97	Y	2	16633853
	5–A24	10.515	CLIP, FRT S/D I/S HDL ROD (PART OF LOCK ASM) (ROD TO HDL) (PART OF 22) (YELLOW) (10.527)	97	Y	2	16633853
24.	5–A26	10.563	ROD, FRT S/D LK CYL (TO PAWL/LVR ON LK CYL)	97	Y	LH	10233179
	5–A26	10.563	ROD, FRT S/D LK CYL (TO PAWL/LVR ON LK CYL)	97	Y	RH	10233180
25.	5–A26	10.565	RETAINER, FRT S/D LK CYL ROD (AT LK CYLINDER) (YELLOW) (10.527)	97	Y	2	16633853
26.		8.900	BOLT/SCREW, HEX W/FL WA 17 OD, M6X1X20, 9.8, 4345M, DOG PT (FRT S/D O/S HDL)	97		4	11515704
27.		8.906	BOLT/SCREW, M6.0X1.0–20.0 TORX RD WA, GM6138M (FRT S/D LK) (LK TO DR)	97		6	11517230
28.	5–A22	10.470	COVER, FRT S/D LK	97	Y	2	10275522
29.	5–A27	10.569	STRIKER, FRT S/D LK (BLACK) (INCLS PLATE, REINFORCEMENT & STRIKER)	97	Y	2	21090040
30.	5–A27	10.571	SPACER, FRT S/D LK STKR (1 MM THK) (REPLS SPACER 2 MM THK) (16.335) (ID #4372)	97	Y	6	15012626
	5–A27	10.571	SPACER, FRT S/D LK STKR (ID #4372)	97	Y	6	16634372
31.	5–A27	10.571	WASHER, FRT S/D LK STKR	97	Y	2	22597807
32.	5–A27	10.570	BOLT, FRT S/D LK STKR (M8X1.25X35) (8.908)	97	Y	4	9442471
33.	5–A26	10.565	CLIP, FRT S/D O/S HDL ROD (PART OF 22) (BLACK) (16.353)	97	Y	2	16675980
34.	5–A26	10.563	ROD, FRT S/D O/S HDL	97	Y	2	10233177
35.	5–A26	10.551	RETAINER, FRT S/D LK CYL (PART OF 39)	97	Y	2	12531200
36.	5–A26	10.550	GASKET, FRT S/D LK CYL	97	Y	2	22600784
37.	5–A26	10.565	CLIP, FRT S/D O/S HDL ROD (NATURAL) (10.512)	97	Y	2	16627215
38.	5–A26	10.550	CYLINDER, FRT S/D LK (INCLS 44–50)	97	Y	1	12457616
39.	5–A25	10.527	HANDLE, FRT S/D O/S (INCLS 35, 53) (WHITE)	97	Y (10U)	RH	10271319
	5–A25	10.527	HANDLE, FRT S/D O/S (INCLS 35, 53) (WHITE)	97	Y (10U)	LH	10271320
	5–A25	10.527	HANDLE, FRT S/D O/S (INCLS 35, 53) (SILVER)	97	Y (13U)	RH	10271321

cardiagn.com

								1Y10-047
	5-A25	10.527	HANDLE, FRT S/D O/S (INCLS 35, 53) (RED)	97	Y (70U)	RH		10271329
	5-A25	10.527	HANDLE, FRT S/D O/S (INCLS 35, 53) (PAINT TO MATCH)	97	Y	LH		10439373
	5-A25	10.527	HANDLE, FRT S/D O/S (INCLS 35, 53) (PAINT TO MATCH)	97	Y	RH		10439374
	5-A25	10.527	HANDLE, FRT S/D O/S (INCLS 35, 53) (BLACK)	97	Y (41U)	RH		10439560
40.	5-A25	10.527	BUMPER, FRT S/D O/S HDL	97	Y	2		12530199
41.	5-A27	10.587	BUMPER, FRT S/D	97	Y	2		20376243
42.	5-A26	10.565	CLIP, FRT S/D LKG ROD (FOAM)	97	Y	2		10132220
43.	5-M9	2.187	KEY, DR LK & IGN LK (UNCODED) (RESISTOR CODE #10)	97	Y	1		2852564
	5-M9	2.187	KEY, DR LK & IGN LK (UNCODED) (RESISTOR CODE #11)	97	Y	1		2852565
	5-M9	2.187	KEY, DR LK & IGN LK (UNCODED) (RESISTOR CODE #12)	97	Y	1		2852566
	5-M9	2.187	KEY, DR LK & IGN LK (UNCODED) (RESISTOR CODE #13)	97	Y	1		2852567
	5-M9	2.187	KEY, DR LK & IGN LK (UNCODED) (RESISTOR CODE #14)	97	Y	1		2852568
	5-M9	2.187	KEY, DR LK & IGN LK (UNCODED) (RESISTOR CODE #15)	97	Y	1		2852569
	5-M9	2.187	KEY, DR LK & IGN LK (UNCODED) (RESISTOR CODE #2)	97	Y	1		2852556
	5-M9	2.187	KEY, DR LK & IGN LK (UNCODED) (RESISTOR CODE #3)	97	Y	1		2852557
	5-M9	2.187	KEY, DR LK & IGN LK (UNCODED) (RESISTOR CODE #4)	97	Y	1		2852558
	5-M9	2.187	KEY, DR LK & IGN LK (UNCODED) (RESISTOR CODE #5)	97	Y	1		2852559
	5-M9	2.187	KEY, DR LK & IGN LK (UNCODED) (RESISTOR CODE #6)	97	Y	1		2852560
	5-M9	2.187	KEY, DR LK & IGN LK (UNCODED) (RESISTOR CODE #7)	97	Y	1		2852561
	5-M9	2.187	KEY, DR LK & IGN LK (UNCODED) (RESISTOR CODE #8)	97	Y	1		2852562
	5-M9	2.187	KEY, DR LK & IGN LK (UNCODED) (RESISTOR CODE #9)	97	Y	1		2852563
44.	5-A26	10.552	CAP, FRT S/D LK CYL (PART OF 38) (BRIGHT)	97	Y	1		12327911
45.		N.S.	SHUTTER, FRT S/D LK CYL (PART OF 38)					

cardiagn.com

								1Y10-047
46.	5-A26	10.552	SPRING, FRT S/D LK CYL SHUTTER (PART OF 38)	97	Y		2	12503691
47.	5-A26	10.553	SPRING, FRT S/D LK CYL TUMB (PART OF 38) (10.266)	97	Y		7	21035207
48.	5-A26	10.553	TUMBLER, FRT S/D LK CYL (PART OF 38) (#2)	97	Y		AR	12522874
	5-A26	10.553	TUMBLER, FRT S/D LK CYL (PART OF 38) (#3)	97	Y		AR	12522875
	5-A26	10.553	TUMBLER, FRT S/D LK CYL (PART OF 38) (#4)	97	Y		AR	12522876
49.	5-A26	10.551	LEVER, FRT S/D LK CYL (PART OF 38)	97	Y		1	16608980
50.	5-A26	10.551	RETAINER, FRT S/D LK PAWL (PART OF 38) (SPR CLIP) (10.550)	97	Y		1	16600277
51.	5-M27	2.530	CONNECTOR, INLINE-TO I/P HARN (10-WAY F W/LEADS) (2.535) (AC-DELCO #PT150) ...	97	Y		1	12101762
	5-M27	2.530	CONNECTOR, INLINE-TO I/P HARN (BLUE) (10-WAY F) (W/LEADS) (AC PT224) (2.535) (AC-DELCO #PT224)	97	Y		1	12101832
	5-M27	2.530	CONNECTOR, INLINE-TC I/P HARN (4-WAY F W/LEADS) (2.535) (AC-DELCO #PT382) ...	97	Y (UZ6, U1S)		1	12102900
	5-M27	2.530	CONNECTOR, INLINE-TO I/P HARN (8--WAY M W/LEADS) (AC-DELCO #PT443)	97	Y		1	12117270
	5-M27	2.530	CONNECTOR, INLINE-TO I/P HARN (3-WAY M W/LEADS) (AC-DELCO #PT504)	97	Y		1	12117371
	5-M27	2.530	CONNECTOR, INLINE-TO I/P HARN (BLACK) (10-WAY M) (AC-DELCO #PT505)	97	Y (MM6, M30)		1	12117372
	5-M27	2.530	CONNECTOR, INLINE-TO I/P HARN (20-WAY M, W/O LEADS)	97	Y		1	12160542
	5-M27	2.530	CONNECTOR, INLINE-TO I/P HARN (6-WAY F W/LEADS) (13.090) (AC-DELCO #PT1032) .	97	Y		2	15305888
52.	5-A27	10.587	PLUG, FRT S/D INR PNL HOLE (BOTTOM OF DOOR INR PNL IN FRT OF SQUARE HOLE FOR REGULATOR ADJUST.) (FITS 23.1MM HOLE) (ROUND)	97	Y		2	10288134
53.	5-A25	10.537	GASKET, FRT S/D O/S HDL (PART OF 39)	97	Y	RH		12531201
	5-A25	10.537	GASKET, FRT S/D O/S HDL (PART OF 39)	97	Y	LH		12531227

RPO DEFINITIONS

MM6 – TRANSMISSION MAN 6 SPD, BORG WARNER, 85MM, 1ST 2.66, 6TH 0.50, O/D
M30 – TRANSMISSION,AUTOMATIC 4 SPEED,4L60E,ELECTRONIC
UZ6 – SPEAKER SYSTEM 6, QUAD FRT DR MTD, DUAL QTR MTD
U1S – PLAYER MULTIPLE COMPACT DISC
10U – EXTERIOR COLOR,ARTIC WHITE
13U – EXTERIOR COLOR,SILVER METALLIC
41U – EXTERIOR COLOR,PRIMARY,BLACK
70U – EXTERIOR COLOR,TORCH RED

cardiagn.com

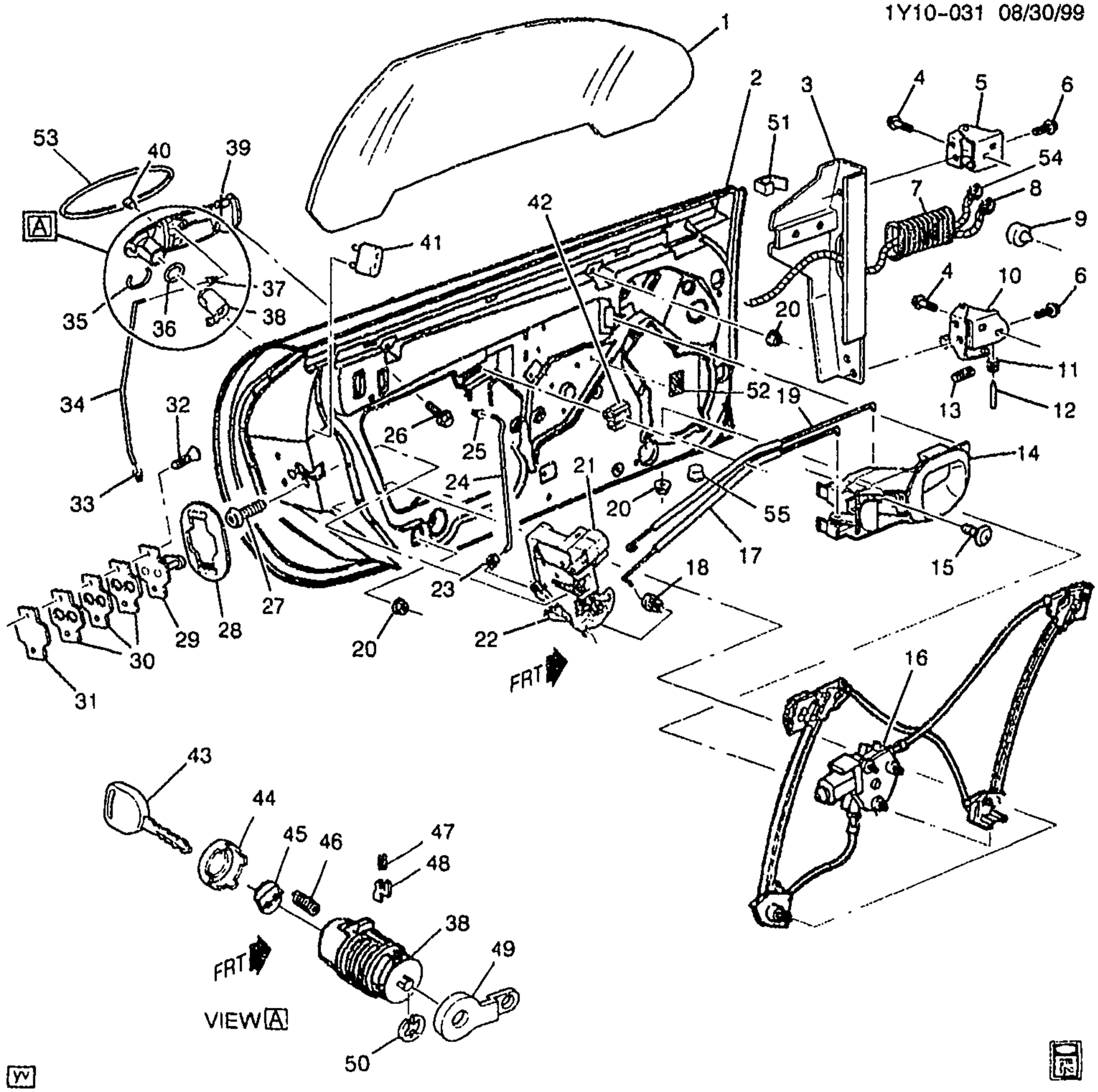

1Y10-031

1998-2002 Y DOOR HARDWARE/FRONT

1.	5-A27	10.681	WINDOW, FRT S/D	98-02	Y	LH	10403189
	5-A27	10.681	WINDOW, FRT S/D	98-02	Y	RH	10403190
2.	5-A21	10.351	DOOR, FRT SI	98-02	Y	LH	10414235
	5-A21	10.351	DOOR, FRT SI	98-99	Y	RH	10414236
	5-A21	10.351	DOOR, FRT SI	00-02	Y	RH	10433526
3.		N.S.	REINFORCEMENT, FRT S/D INR PNL HGE				
4.		8.900	BOLT-HEX, M8X1.25X30, 22 THD, 24MM OD, 9.8, 7114M (FRT S/D HGE (BODY SI))	98-02		8	11516594

cardiagn.com

							1Y10-031
5.	5-A21	10.450	HINGE, FRT S/D UPR (MODIFIED '95 GM10 HGE)	98-02	Y	LH	16632809
	5-A21	10.450	HINGE, FRT S/D UPR (MODIFIED '95 GM10 HGE)	98-02	Y	RH	16632810
6.		8.900	BOLT, HEX W/CON WA M8X1.25X35 9.8 7114M 24OD P-PT (FRT S/D HGE) (DR SI)	98-02		8	11516595
7.	5-N23	13.090	GROMMET, S/D WRG (LH & RH)	98-02	Y	2	10412644
		8.800	LUBRICANT, RUBBER 5 GAL (FRT S/D DR WRG HARN GROM)	98-02		AR	12345884
8.	5-N23	13.090	HARNESS, DR LK & O/S RRVIEW MIR MEMORY INTERFACE MDL WRG	98-00	Y	LH	12163314
	5-N23	13.090	HARNESS, DR LK & O/S RRVIEW MIR MEMORY INTERFACE MDL WRG	98-99	Y	RH	12163315
	5-N23	13.090	HARNESS, DR LK & O/S RRVIEW MIR MEMORY INTERFACE MDL WRG	00-02	Y (T93)	RH	12163315
	5-N23	13.090	HARNESS, DR LK & O/S RRVIEW MIR MEMORY INTERFACE MDL WRG	01-02	Y (DL8)	LH	12163314
	5-N23	13.090	HARNESS, DR LK & O/S RRVIEW MIR MEMORY INTERFACE MDL WRG	01-02	Y (DD0)	LH	12189556
	5-N25	13.100	CONNECTOR, INLINE-TO DR LK ACTR MOT (2-WAY F) (W/LEADS) (W/SEAL) (2.535) (AC-DELCO #PT247)	98-02	Y	2	12101855
	5-A22	10.485	CONNECTOR, SW-DR LK (GREEN) (2-WAY F, W/LEADS) (2.535) (AC-DELCO #PT248)	98-02	Y	2	12101856
	5-B4	10.777	CONNECTOR, SW-SI WDO & M/FUNC (BLACK) (7-WAY F, W/LEADS) (2.535) (AC-DELCO #PT406)	98-02	Y	1	12102778
9.	5-A21	10.455	STOP, FRT S/D UPR	98-02	Y	2	10289774
10.	5-A21	10.454	HINGE, FRT S/D LWR (INCLS 11, 12, 13)	98-02	Y	LH	16634677
	5-A21	10.454	HINGE, FRT S/D LWR (INCLS 11, 12, 13)	98-02	Y	RH	16634678
11.	5-A21	10.455	ROLLER, FRT S/D CHK LINK (PART OF 10) (W/BUSH, LUB & ROLLER) (MAY REQUIRE LUBE P/N 1050109 TO EASE INSTALLATION)	98-02	Y	2	20058035
12.	5-A21	10.455	PIN, FRT S/D CHK LINK (PART OF 10)	98-02	Y	2	20262500
13.	5-A21	10.455	SPRING, FRT S/D LWR HGE (PART OF 10)	98-02	Y	2	20361482
14.	5-A24	10.512	HANDLE, FRT S/D I/S	98-02	Y	LH	10406533
	5-A24	10.512	HANDLE, FRT S/D I/S	98-02	Y	RH	10406534
15.	5-A24	10.512	BOLT, FRT S/D I/S HDL (10.268)	98-02	Y	2	10281420
16.	5-B5	10.783	REGULATOR, FRT S/D WDO (W/MOTOR)	98-02	Y	RH	10417573
	5-B5	10.783	REGULATOR, FRT S/D WDO	98-02	Y	LH	10446574
	5-B5	10.783	CONNECTOR, MOT-WDO REG (AC-DELCO #PT1044)	98-02	Y	1	15305982

cardiagn.com

							1Y10-031
17.	5-A26	10.563	ROD, FRT S/D LKG	98-02	Y	LH	10233183
	5-A26	10.563	ROD, FRT S/D LKG	98-02	Y	RH	10233184
18.	5-A24	10.515	CLIP, FRT S/D I/S HDL ROD (ROD TO LATCH) (YELLOW) (10.527) (USED W/ROD WITH (1) 90 DEGREE BENDS) (2ND DES SEE 16640343)	00	Y (1ST DES)	2	16633853
	5-A24	10.515	CLIP, FRT S/D I/S HDL ROD (ROD TO LATCH) (YELLOW) (10.527) (USED W/ROD WITH (2) 90 DEGREE BENDS) (1ST DES SEE 16633853)	00	Y (2ND DES)	2	16640343
	5-A24	10.515	CLIP, FRT S/D I/S HDL ROD (AT I/S HANDLE) (ROD TO LATCH) (YELLOW) (10.527)	98-99	Y	2	16633853
	5-A24	10.515	CLIP, FRT S/D I/S HDL ROD (AT I/S HANDLE) (ROD TO LATCH) (YELLOW) (10.527)	01	Y	2	16633853
	5-A24	10.515	CLIP, FRT S/D I/S HDL ROD (PART OF LOCK ASM) (ROD TO LATCH) (YELLOW) (10.527)	98-99	Y	2	16633853
	5-A24	10.515	CLIP, FRT S/D I/S HDL ROD (PART OF LOCK ASM) (ROD TO LATCH) (YELLOW) (10.527) (USED W/ROD WITH (1) 90 DEGREE BENDS) (2ND DES SEE 16640343)	00	Y (1ST DES)	2	16633853
	5-A24	10.515	CLIP, FRT S/D I/S HDL ROD (PART OF LOCK ASM) (ROD TO LATCH) (YELLOW) (10.527) (USED W/ROD WITH (2) 90 DEGREE BENDS) (1ST DES SEE 16633853)	00	Y (2ND DES)	2	16640343
	5-A24	10.515	CLIP, FRT S/D I/S HDL ROD (PART OF LOCK ASM) (ROD TO LATCH) (YELLOW) (10.527)	01-02	Y	2	16633853
19.	5-A26	10.563	ROD, FRT S/D I/S HDL	98-02	Y	LH	10233181
	5-A26	10.563	ROD, FRT S/D I/S HDL	98-02	Y	RH	10233182
20.		8.917	NUT, HEX W/CON WA. 24 OD, M6X1X5.6, 9M, PZOR (FRT S/D WDO REG)	98-02		14	11514275
21.		N.S.	ACTUATOR, FRT S/D LK (PART OF 22)				
22.	5-A22	10.470	LOCK, FRT S/D (INCLS 21, 23, 33) (INCLS THEFT DET SWITCH & ACTUATOR)	98-99	Y	RH	16636582
	5-A22	10.470	LOCK, FRT S/D (INCLS 21, 23, 33)	98-02	Y	LH	16640975
	5-A22	10.470	LOCK, FRT S/D (INCLS 21, 23, 33)	00-02	Y (EXC BCC)	RH	16639572
	5-A22	10.470	LOCK, FRT S/D (INCLS 21, 23, 33) (INCLS THEFT DET SWITCH & ACTUATOR)	00-02	Y (BCC) (EXPORT)	RH	16636582

cardiagn.com

							1Y10-031
23.	5-A24	10.515	CLIP, FRT S/D I/S HDL ROD (ROD TO HDL) (PART OF 22) (YELLOW) (10.527) (USED W/ROD WITH (1) 90 DEGREE BENDS) (2ND DES SEE 16640343)	00	Y (1ST DES)	2	16633853
	5-A24	10.515	CLIP, FRT S/D I/S HDL ROD (ROD TO HDL) (PART OF 22) (YELLOW) (10.527) (USED W/ROD WITH (2) 90 DEGREE BENDS) (1ST DES SEE 16633853)	00	Y (2ND DES)	2	16640343
	5-A24	10.515	CLIP, FRT S/D I/S HDL ROD (AT I/S HANDLE) (ROD TO HDL) (PART OF 22) (YELLOW) (10.527)	98-99	Y	2	16633853
	5-A24	10.515	CLIP, FRT S/D I/S HDL ROD (AT I/S HANDLE) (ROD TO HDL) (PART OF 22) (YELLOW) (10.527)	01	Y	2	16633853
	5-A24	10.515	CLIP, FRT S/D I/S HDL ROD (PART OF LOCK ASM) (ROD TO HDL) (PART OF 22) (YELLOW) (10.527)	98-99	Y	2	16633853
	5-A24	10.515	CLIP, FRT S/D I/S HDL ROD (PART OF LOCK ASM) (ROD TO HDL) (PART OF 22) (YELLOW) (10.527) (USED W/ROD WITH (1) 90 DEGREE BENDS) (2ND DES SEE 16640343)	00	Y (1ST DES)	2	16633853
	5-A24	10.515	CLIP, FRT S/D I/S HDL ROD (PART OF LOCK ASM) (ROD TO HDL) (PART OF 22) (YELLOW) (10.527) (USED W/ROD WITH (2) 90 DEGREE BENDS) (1ST DES SEE 16633853)	00	Y (2ND DES)	2	16640343
	5-A24	10.515	CLIP, FRT S/D I/S HDL ROD (PART OF LOCK ASM) (ROD TO HDL) (PART OF 22) (YELLOW) (10.527)	01-02	Y	2	16633853
24.	5-A26	10.563	ROD, FRT S/D LK CYL (TO PAWL/LVR ON LK CYL)	98-02	Y	LH	10233179
	5-A26	10.563	ROD, FRT S/D LK CYL (TO PAWL/LVR ON LK CYL)	98-99	Y	RH	10233180
	5-A26	10.563	ROD, FRT S/D LK CYL (TO PAWL/LVR ON LK CYL)	00-02	Y (BCC) (EXPORT)	RH	10233180
25.	5-A26	10.565	RETAINER, FRT S/D LK CYL ROD (YELLOW) (10.527) (USED W/ROD WITH (1) 90 DEGREE BENDS) (2ND DES SEE 16640343)	00	Y (1ST DES)	2	16633853
	5-A26	10.565	RETAINER, FRT S/D LK CYL ROD (AT LK CYLINDER) (YELLOW) (10.527)	98-99	Y	2	16633853
	5-A26	10.565	RETAINER, FRT S/D LK CYL ROD (AT LK CYLINDER) (YELLOW) (10.527) (USED W/ROD WITH (2) 90 DEGREE BENDS) (1ST DES SEE 16633853)	00	Y (2ND DES)	2	16640343

cardiagn.com

							1Y10-031
	5-A26	10.565	RETAINER, FRT S/D LK CYL ROD (AT LK CYLINDER) (YELLOW) (10.527)	01-02	Y	2	16633853
26.		8.900	BOLT/SCREW, HEX W/FL WA 17 OD, M6X1X20, 9.8, 4345M, DOG PT (FRT S/D O/S HDL)	98-02		4	11515704
27.		8.906	BOLT/SCREW, M6.0X1.0-20.0 TORX RD WA, GM6138M (FRT S/D LK) (LK TO DR)	98-02		6	11517230
28.	5-A22	10.470	COVER, FRT S/D LK	98-02	Y	2	10275522
29.	5-A27	10.569	STRIKER, FRT S/D LK (BLACK) (INCLS PLATE, REINFORCEMENT & STRIKER)	98-02	Y	2	21090040
30.	5-A27	10.571	SPACER, FRT S/D LK STKR (1 MM THK) (REPLS SPACER 2 MM THK) (16.335) (ID #4372)	98-01	Y	6	15012626
	5-A27	10.571	SPACER, FRT S/D LK STKR (ID #4372)	98-02	Y	6	16634372
31.	5-A27	10.571	WASHER, FRT S/D LK STKR	98-02	Y	2	22597807
32.	5-A27	10.570	BOLT, FRT S/D LK STKR (M8X1.25X35) (8.908)	98-02	Y	4	9442471
33.	5-A26	10.565	CLIP, FRT S/D O/S HDL ROD (PART OF 22) (BLACK) (16.353)	98-02	Y	2	16675980
34.	5-A26	10.563	ROD, FRT S/D O/S HDL	98-02	Y	2	10233177
35.	5-A26	10.551	RETAINER, FRT S/D LK CYL (PART OF 39)	98-02	Y	2	12531200
36.	5-A26	10.550	GASKET, FRT S/D LK CYL	98-02	Y	2	22600784
37.	5-A26	10.565	CLIP, FRT S/D O/S HDL ROD (NATURAL) (10.512)	98-02	Y	2	16627215
38.	5-A26	10.550	CYLINDER, FRT S/D LK (INCLS 44-50)	98-02	Y	1	12457616
39.	5-A25	10.527	HANDLE, FRT S/D O/S (INCLS 35, 53) (WHITE)	98-99	Y (10U)	RH	10271319
	5-A25	10.527	HANDLE, FRT S/D O/S (INCLS 35, 53) (WHITE)	98-00	Y (10U)	LH	10271320
	5-A25	10.527	HANDLE, FRT S/D O/S (INCLS 35, 53) (SILVER)	98-99	Y (13U)	RH	10271321
	5-A25	10.527	HANDLE, FRT S/D O/S (INCLS 35, 53) (RED)	98-99	Y (70U)	RH	10271329
	5-A25	10.527	HANDLE, FRT S/D O/S (INCLS 35, 53) (PAINT TO MATCH)	98-02	Y	LH	10439373
	5-A25	10.527	HANDLE, FRT S/D O/S (INCLS 35, 53) (PAINT TO MATCH)	98-99	Y	RH	10439374
	5-A25	10.527	HANDLE, FRT S/D O/S (INCLS 35, 53) (BLACK)	98-99	Y (41U)	RH	10439560
	5-A25	10.527	HANDLE, FRT S/D O/S (INCLS 35, 53) (PEWTER)	98-01	Y (11U)	LH	10282425
	5-A25	10.527	HANDLE, FRT S/D O/S (INCLS 35, 53) (YELLOW)	00	Y07-67 (79U)	LH	10410626
	5-A25	10.527	HANDLE, FRT S/D O/S (INCLS 35, 53) (PAINT TO MATCH)	00-02	Y (EXC BCC)	RH	10439381
	5-A25	10.527	HANDLE, FRT S/D O/S (INCLS 35, 53) (BLACK)	00-02	Y (41U) (EXC BCC)	RH	10439576
	5-A25	10.527	HANDLE, FRT S/D O/S (INCLS 35, 53) (RED)	00-02	Y (70U) (EXC BCC)	RH	10439577
	5-A25	10.527	HANDLE, FRT S/D O/S (INCLS 35, 53) (YELLOW)	01	Y (79U)	LH	10410626

cardiagn.com

							1Y10-031
	5-A25	10.527	HANDLE, FRT S/D O/S (INCLS 35, 53) (WHITE)	00	Y (BCC, 10U) (EXPORT)	RH	10271319
	5-A25	10.527	HANDLE, FRT S/D O/S (INCLS 35, 53) (SILVER)	00	Y (BCC, 13U) (EXPORT)	RH	10271321
	5-A25	10.527	HANDLE, FRT S/D O/S (INCLS 35, 53) (RED)	00-01	Y07-67 (BCC, 70U) (EXPORT)	RH	10271329
	5-A25	10.527	HANDLE, FRT S/D O/S (INCLS 35, 53) (PAINT TO MATCH)	00-02	Y (BCC) (EXPORT)	RH	10439374
	5-A25	10.527	HANDLE, FRT S/D O/S (INCLS 35, 53) (BLACK)	00-02	Y07-67 (BCC, 41U) (EXPORT)	RH	10439560
40.	5-A25	10.527	BUMPER, FRT S/D O/S HDL	98-02	Y	2	12530199
41.	5-A27	10.587	BUMPER, FRT S/D	98-02	Y	2	20376243
42.	5-A26	10.565	CLIP, FRT S/D LKG ROD (FOAM)	98-02	Y	2	10132220
43.	5-M9	2.187	KEY, DR LK & IGN LK (UNCODED) (RESISTOR CODE #10)	98-02	Y	1	2852564
	5-M9	2.187	KEY, DR LK & IGN LK (UNCODED) (RESISTOR CODE #11)	98-02	Y	1	2852565
	5-M9	2.187	KEY, DR LK & IGN LK (UNCODED) (RESISTOR CODE #12)	98-02	Y	1	2852566
	5-M9	2.187	KEY, DR LK & IGN LK (UNCODED) (RESISTOR CODE #13)	98-02	Y	1	2852567
	5-M9	2.187	KEY, DR LK & IGN LK (UNCODED) (RESISTOR CODE #14)	98-02	Y	1	2852568
	5-M9	2.187	KEY, DR LK & IGN LK (UNCODED) (RESISTOR CODE #15)	98-02	Y	1	2852569
	5-M9	2.187	KEY, DR LK & IGN LK (UNCODED) (RESISTOR CODE #2)	98-02	Y	1	2852556
	5-M9	2.187	KEY, DR LK & IGN LK (UNCODED) (RESISTOR CODE #3)	98-02	Y	1	2852557
	5-M9	2.187	KEY, DR LK & IGN LK (UNCODED) (RESISTOR CODE #4)	98-02	Y	1	2852558
	5-M9	2.187	KEY, DR LK & IGN LK (UNCODED) (RESISTOR CODE #5)	98-02	Y	1	2852559
	5-M9	2.187	KEY, DR LK & IGN LK (UNCODED) (RESISTOR CODE #6)	98-02	Y	1	2852560
	5-M9	2.187	KEY, DR LK & IGN LK (UNCODED) (RESISTOR CODE #7)	98-02	Y	1	2852561
	5-M9	2.187	KEY, DR LK & IGN LK (UNCODED) (RESISTOR CODE #8)	98-02	Y	1	2852562
	5-M9	2.187	KEY, DR LK & IGN LK (UNCODED) (RESISTOR CODE #9)	98-02	Y	1	2852563
44.	5-A26	10.552	CAP, FRT S/D LK CYL (PART OF 38) (BRIGHT)	98-02	Y	1	12327911

cardiagn.com

							1Y10-031
45.		N.S.	SHUTTER, FRT S/D LK CYL (PART OF 38)				
46.	5-A26	10.552	SPRING, FRT S/D LK CYL SHUTTER (PART OF 38)	98-02	Y	2	12503691
47.	5-A26	10.553	SPRING, FRT S/D LK CYL TUMB (PART OF 38) (10.266)	98-02	Y	7	21035207
48.	5-A26	10.553	TUMBLER, FRT S/D LK CYL (PART OF 38) (#2)	98-02	Y	AR	12522874
	5-A26	10.553	TUMBLER, FRT S/D LK CYL (PART OF 38) (#3)	98-02	Y	AR	12522875
	5-A26	10.553	TUMBLER, FRT S/D LK CYL (PART OF 38) (#4)	98-02	Y	AR	12522876
49.	5-A26	10.551	LEVER, FRT S/D LK CYL (PART OF 38)	98-02	Y	1	16608980
50.	5-A26	10.551	RETAINER, FRT S/D LK PAWL (PART OF 38) (SPR CLIP) (10.550)	98-02	Y	1	16600277
51.	5-N9	8.141	RETAINER, F/FDR UPR (TO DR EDGE)	98-02	Y	2	10412533
52.	5-N23	12.895	SEAL, FRT S/D INR PNL HOLE (4 1/4"X7 1/2") (TRIM AS REQ'D) (15.492)	98-02	Y	AR	11515174
53.	5-A25	10.537	GASKET, FRT S/D O/S HDL (PART OF 39)	98-02	Y	RH	12531201
	5-A25	10.537	GASKET, FRT S/D O/S HDL (PART OF 39)	98-02	Y	LH	12531227
54.	5-M27	2.530	CONNECTOR, INLINE-TO I/P HARN (10-WAY F W/LEADS) (2.535) (AC-DELCO #PT150)	98-02	Y	1	12101762
	5-M27	2.530	CONNECTOR, INLINE-TO I/P HARN (BLUE) (10-WAY F) (W/LEADS) (AC PT224) (2.535) (AC-DELCO #PT224)	98-02	Y	1	12101832
	5-M27	2.530	CONNECTOR, INLINE-TO I/P HARN (4-WAY F W/LEADS) (2.535) (AC-DELCO #PT382)	98-02	Y (UZ6, U1S)	1	12102900
	5-M27	2.530	CONNECTOR, INLINE-TO I/P HARN (8-WAY M W/LEADS) (AC-DELCO #PT443)	98	Y	1	12117270
	5-M27	2.530	CONNECTOR, INLINE-TO I/P HARN (BLACK) (10-WAY M) (AC-DELCO #PT505)	98-02	Y (MM6, M30)	1	12117372
	5-M27	2.530	CONNECTOR, INLINE-TO I/P HARN (20-WAY M, W/O LEADS)	98-00	Y	1	12160542
	5-M27	2.530	CONNECTOR, INLINE-TO I/P HARN (6-WAY F W/LEADS) (13.090) (AC-DELCO #PT1032)	98-02	Y	2	15305888
	5-M27	2.530	CONNECTOR, INLINE-TO I/P HARN (GRAY) (8-WAY F) (W/LEADS) (2.535) (AC-DELCO #PT214)	99	Y	1	12101822
	5-M27	2.530	CONNECTOR, INLINE-TO I/P HARN (10-WAY M) (2.483)	01-02	Y	1	15326847
	5-M27	2.530	CONNECTOR, INLINE-TO I/P HARN (16-WAY MALE GT150 (W/ LEADS)) (AC-DELCO #PT1416)	01-02	YY	1	15306364

cardiagn.com

							1Y10-031
	5-M27	2.530	CONNECTOR, INLINE-TO I/P HARN (BLUE) (10-WAY F) (W/LEADS) (AC PT224) (2.535) (AC--DELCO #PT224)	02	Y (DD0, DL8)	1	12101832
	5-M27	2.530	CONNECTOR, INLINE-TO I/P HARN (6-WAY F W/LEADS) (13.090) (AC-DELCO #PT1032) .	02	Y (DD0, DL8)	2	15305888
	5-M27	2.530	CONNECTOR, INLINE-TO I/P HARN (BLACK) (10-WAY M) (AC-DELCO #PT505)	02	YY37	1	12117372
55.	5-A27	10.587	PLUG, FRT S/D INR PNL HOLE (BOTTOM OF DOOR INR PNL IN FRT OF SQUARE HOLE FOR REGULATOR ADJUST.) (FITS 23.1MM HOLE) (ROUND)	98-02	Y	2	10288134

RPO DEFINITIONS
BCC - CYLINDER UNIT PASSENGER DR(EXPORT)
DD0 - MIRROR,O/S,R AND L REM CTL,ELEC,DEFOG,LT SENSITIVE
DL8 - MIRROR,OUTSIDE,RH AND LH REMOTE CONTROL,ELECTRIC,DEFOG
MM6 - TRANSMISSION MAN 6 SPD, BORG WARNER, 85MM, 1ST 2.66, 6TH 0 50, O/D
M30 - TRANSMISSION,AUTOMATIC 4 SPEED,4L60E,ELECTRONIC
T93 - LAMP,TAIL AND STOP(SPECIAL)
UZ6 - SPEAKER SYSTEM 6, QUAD FRT DR MTD, DUAL QTR MTD
U1S - PLAYER MULTIPLE COMPACT DISC
10U - EXTERIOR COLOR,ARTIC WHITE
11U - EXTERIOR COLOR,PRIMARY WHITE
13U - EXTERIOR COLOR,SILVER METALLIC
41U - EXTERIOR COLOR,PRIMARY BLACK
70U - EXTERIOR COLOR,TORCH RED
79U - PRIMARY COLOR - EXTERIOR,MYSTIC TEAL PEARL

cardiagn.com

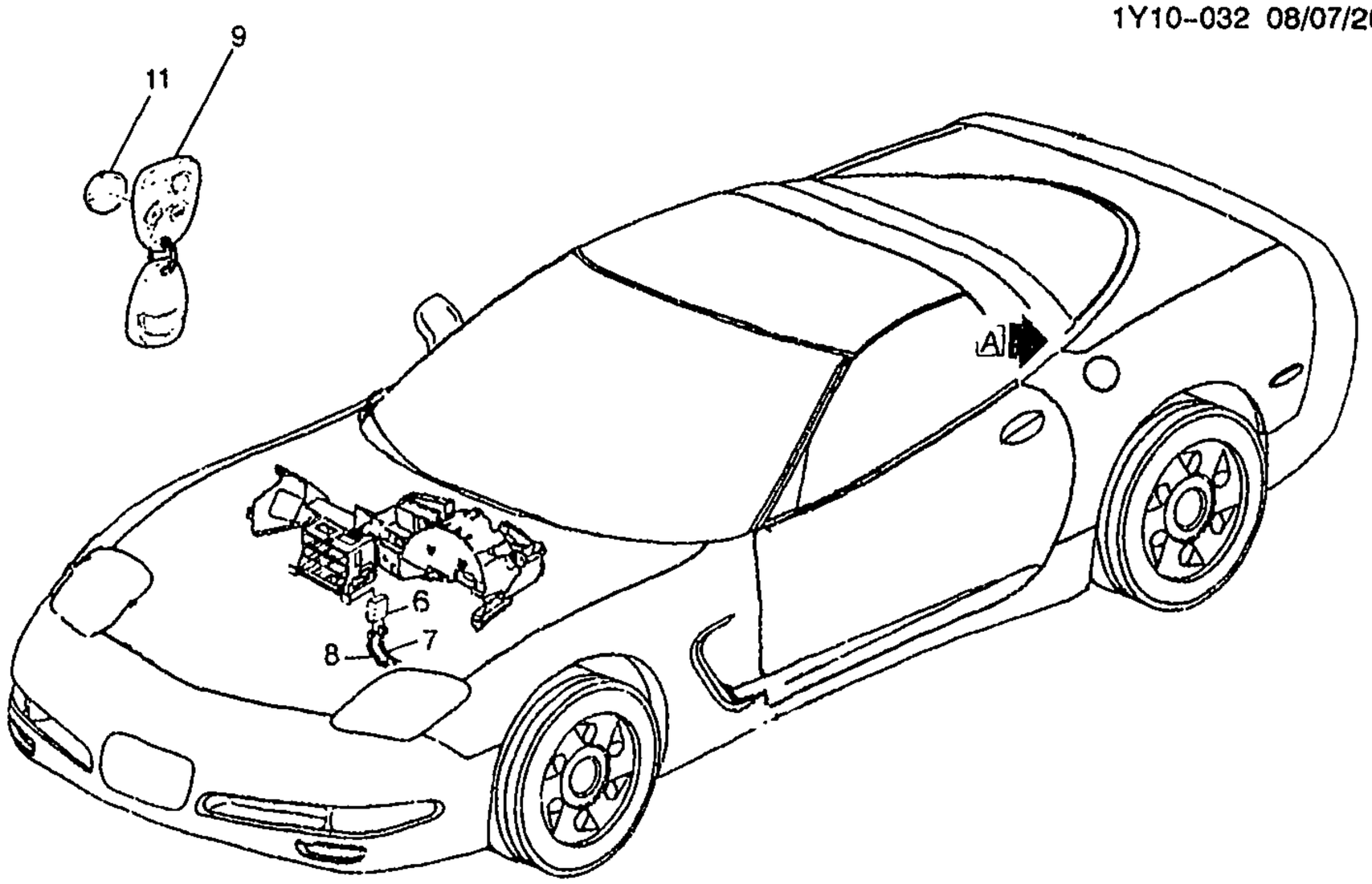

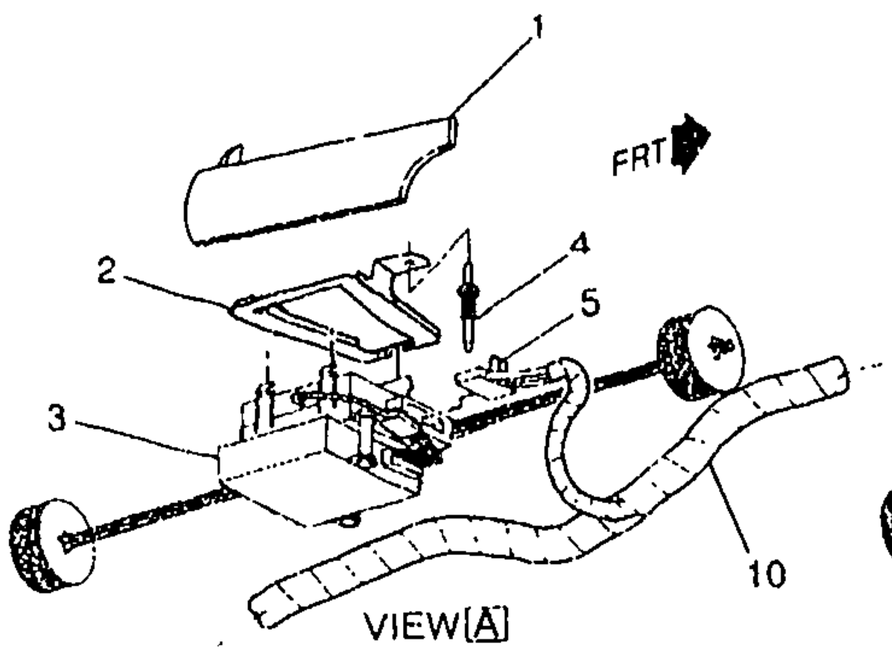

EXPORT

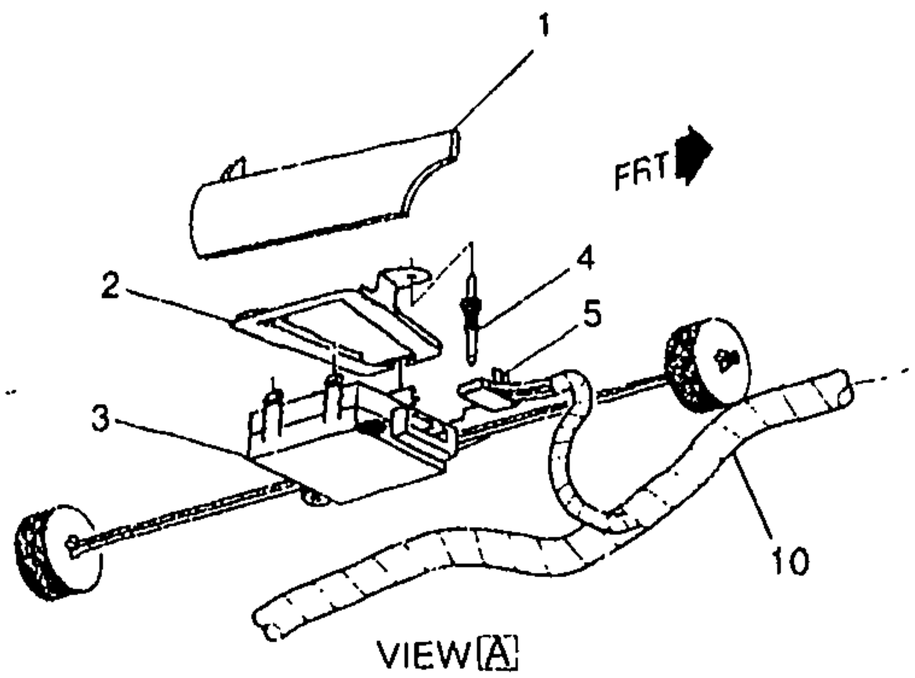

EXC EXPORT

bc

1Y10-032

1997-1998 Y ENTRY SYSTEM/KEYLESS REMOTE

1.	5-A22	10.485	SHIELD, R/CON DR LK RCVR ...	97-98	Y	1	15303405
2.	5-A22	10.485	BRACKET, R/CON DR LK RCVR	97-98	Y	1	10282800
3.	5-A22	10.485	RECEIVER, R/CON DR LK (10.526)	97-98	Y (EXC VD1, VE1)	1	10422621
	5-A22	10.485	RECEIVER, R/CON DR LK	97-98	Y (VD1) (EXPORT)	1	10426004
4.		N.S.	RIVET, R/CON DR LK RCVR BRKT		Y07		

cardiagn.com

							1Y10-032
5.	5-A25	10.526	CONNECTOR, MDL-KEYLESS ENTRY CONT (BLACK) (8-WAY F) (W/LEADS) (2.485) (AC-DELCO #PT709)	97-98	Y	1	12126438
6.	5-M26	2.485	MODULE, HDLP AUTO CONT ...	97-98	Y (Z49)	1	10407669
7.	5-M26	2.485	CONNECTOR, MDL-DAYTIME RUNNING LP CONT (BLUE) (8-WAY F) (W/LEADS) (2.535) (AC-DELCO #PT266)	97-98	Y	1	12101875
8.	5-N12	9.275	CONNECTOR, MDL-BLO MOT CONT (BLACK) (8-WAY F W/LEADS, 7-12GA & 4-18GA AS REQ) (2.535) (AC-DELCO #PT1346)	97-98	Y	1	15306189
9.	5-A22	10.485	TRANSMITTER, R/CON DR LK ..	97-98	Y (EXC VD1, VE1)	2	10253839
	5-A22	10.485	TRANSMITTER, R/CON DR LK ..	98	Y07-67 (VD1) (EXPORT)	2	10407640
10.	5-N23	13.090	HARNESS, BODY FRT WRG	97-98	Y07	1	12189550
	5-N23	13.090	HARNESS, BODY FRT WRG	98	Y67 (UZ6)	1	12189958
11.	5-A22	10.485	BATTERY, R/CON DR LK XMTR (CR2450)	97	Y07 (EXC VD1, VE1) ...	1	12493150
	5-A22	10.485	BATTERY, R/CON DR LK XMTR (CR2450)	98	Y07-67 (EXC VD1, VE1)	1	12493150
	5-A22	10.485	BATTERY, R/CON DR LK XMTR (LITHIUM) (TRADE CR2032) (SEE PART # 12495816 FOR BATTERY PKG)	97-98	Y07-67 (VD1) (EXPORT)	1	12538938

RPO DEFINITIONS
UZ6 - SPEAKER SYSTEM 6, QUAD FRT DR MTD, DUAL QTR MTD
VD1 - PROVISION OPTIONS,EUROPE(EXPORT)
VE1 - PROVISION OPTIONS,JAPAN(EXPORT)
Z49 - MANDATORY CANADIAN BASE EQUIPMENT MODIFICATIONS(CANADIAN)

cardiagn.com

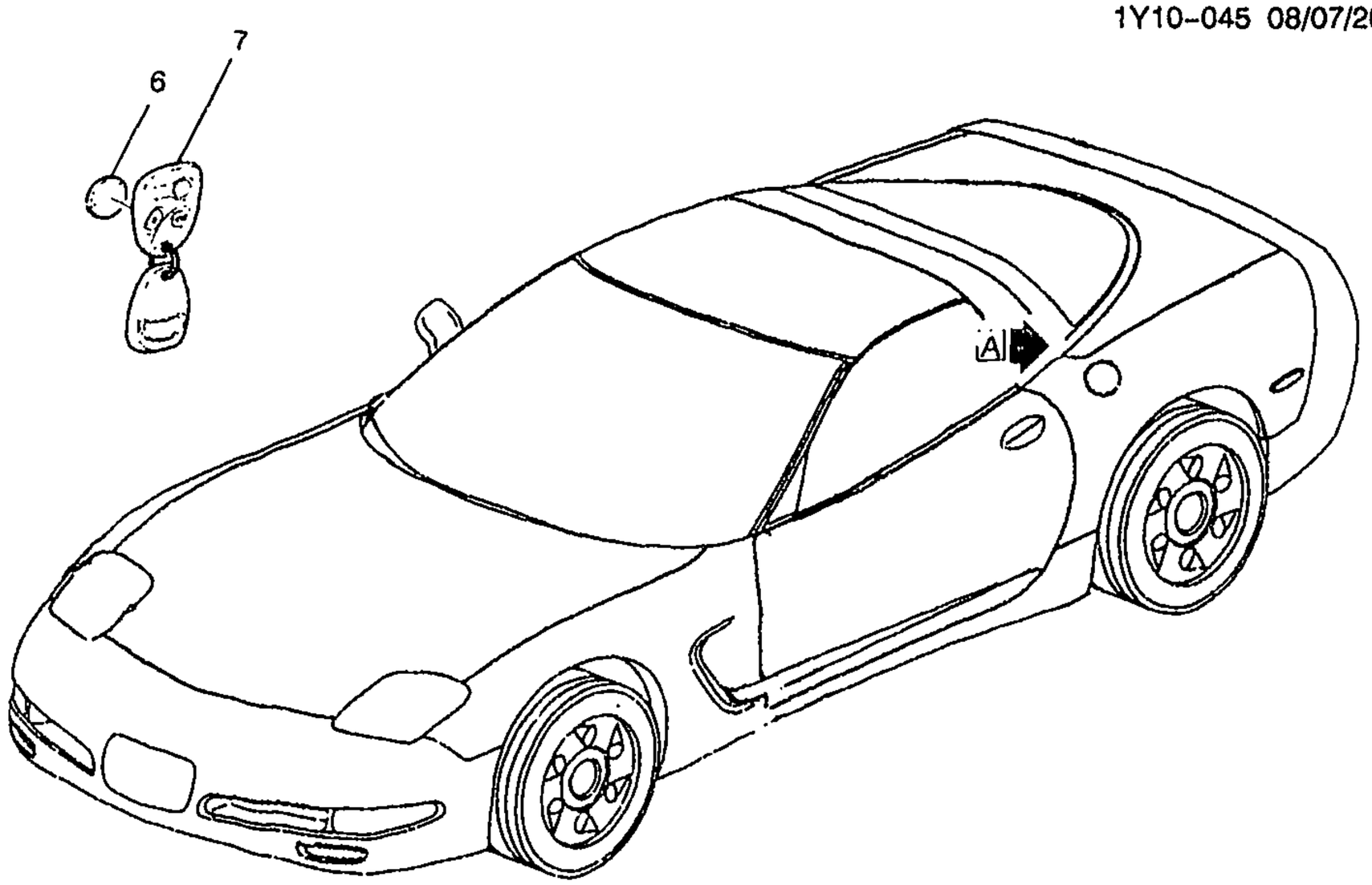

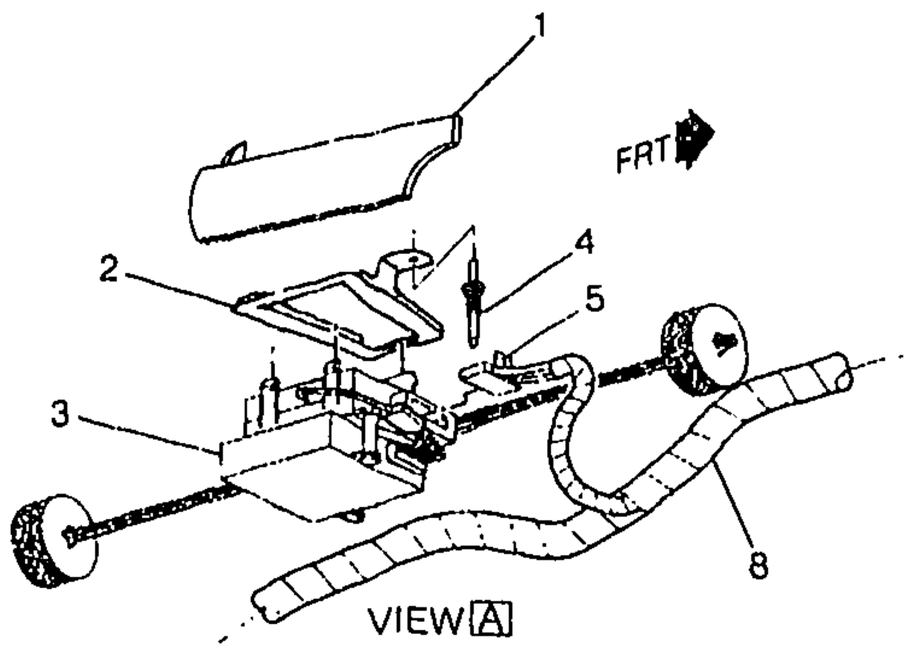

EXPORT

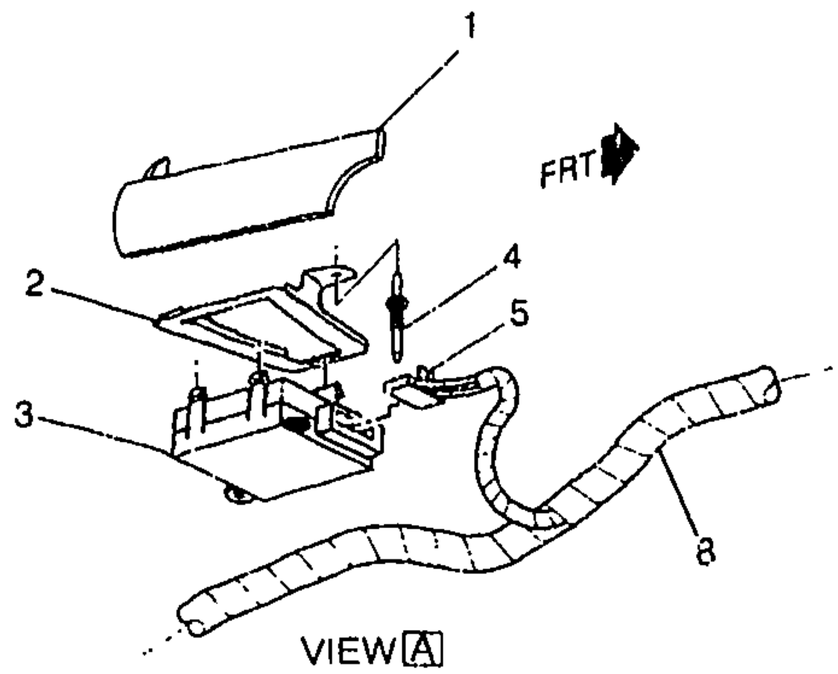

EXC EXPORT

bc

1Y10-045

1999-2000 Y ENTRY SYSTEM/KEYLESS REMOTE

1.	5-A22	10.485	SHIELD, R/CON DR LK RCVR ...	99-00	Y (EXC VD1)	1	15303405
2.	5-A22	10.485	BRACKET, R/CON DR LK RCVR .	99-00	Y	1	10282800
3.	5-A22	10.485	RECEIVER, R/CON DR LK (10.526)	99-00	Y (EXC VD1, VE1)	1	10422621
	5-A22	10.485	RECEIVER, R/CON DR LK	99-00	Y (VD1) (EXPORT)	1	10426004
4.		N.S.	RIVET, R/CON DR LK RCVR BRKT		Y07		

2001 GENERAL MOTORS SERVICE PARTS OPERATIONS-CHEVROLET-15Y

cardiagn.com

						1Y10–045	
5.	5–A25	10.526	CONNECTOR, MDL–KEYLESS ENTRY CONT (BLACK) (8–WAY F) (W/LEADS) (2.485) (AC–DELCO #PT709)	99–00	Y	1	12126438
6.	5–A22	10.485	BATTERY, R/CON DR LK XMTR (CR2450)	99–00	Y (EXC VD1)	1	12493150
	5–A22	10.485	BATTERY, R/CON DR LK XMTR (LITHIUM) (TRADE CR2032) (SEE PART # 12495816 FOR BATTERY PKG)	00	Y07–67 (VD1) (EXPORT)	1	12538938
7.	5–A22	10.485	TRANSMITTER, R/CON DR LK ..	99	Y (EXC VD1, VE1)	2	10253839
	5–A22	10.485	TRANSMITTER, R/CON DR LK ..	00	Y (EXC VD1)	2	10432147
	5–A22	10.485	TRANSMITTER, R/CON DR LK ..	99–00	Y07–67 (VD1) (EXPORT)	2	10407640
8.	5–N23	13.090	HARNESS, BODY FRT WRG	99–00	Y07 (EXC U1S)	1	12189597
	5–N23	13.090	HARNESS, BODY FRT WRG	99–00	Y07 (U1S)	1	12189889
	5–N23	13.090	HARNESS, BODY FRT WRG	99–00	Y37 (U1S)	1	12163772
	5–N23	13.090	HARNESS, BODY FRT WRG	99–00	Y37 (EXC U1S)	1	12189595
	5–N23	13.090	HARNESS, BODY FRT WRG	99–00	Y67 (EXC U1S)	1	12189599
	5–N23	13.090	HARNESS, BODY FRT WRG	99–00	Y67 (U1S)	1	12189962

RPO DEFINITIONS
U1S – PLAYER MULTIPLE COMPACT DISC
VD1 – PROVISION OPTIONS,EUROPE(EXPORT)
VE1 – PROVISION OPTIONS,JAPAN(EXPORT)

cardiagn.com

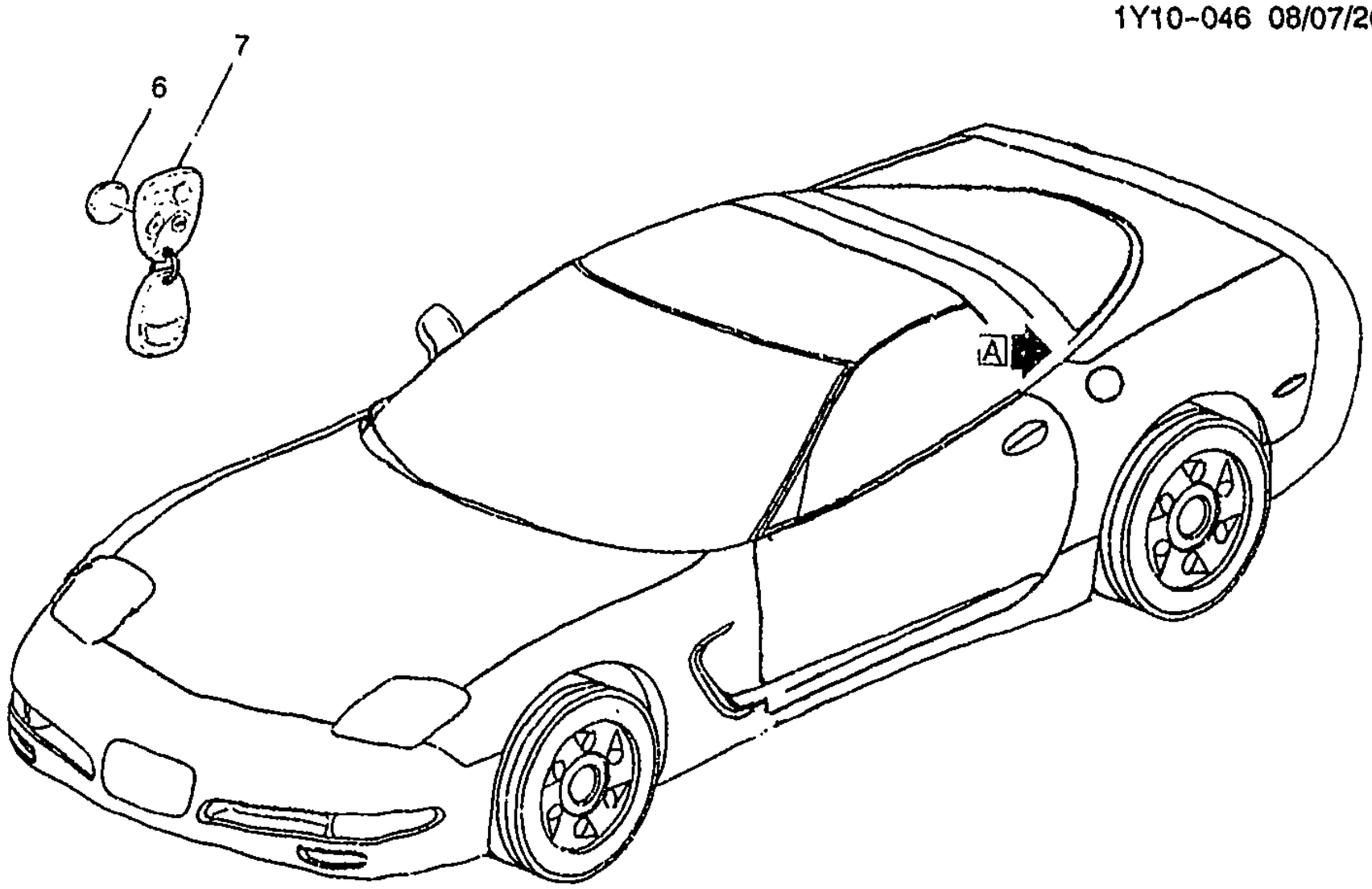

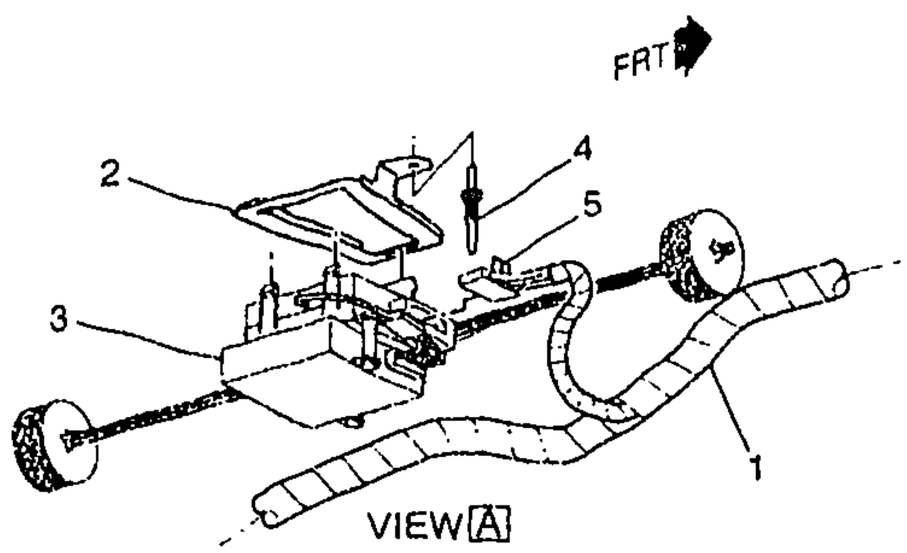

EXPORT

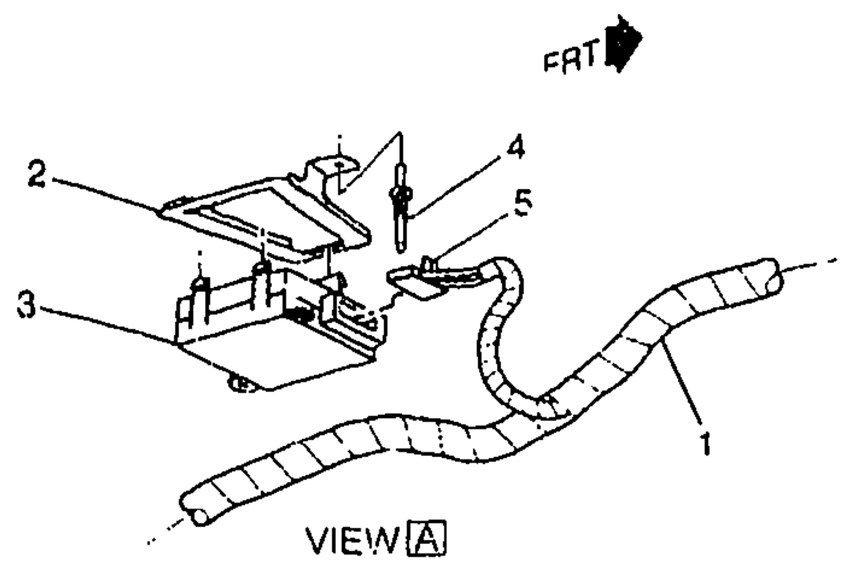

EXC EXPORT

bc

1Y10-046

2001-2002 Y ENTRY SYSTEM/KEYLESS REMOTE

1.	5-N23	13.090	HARNESS, BODY FRT WRG	01-02	YY07 (UZ6) (EXC U1S) .	1	15329382
	5-N23	13.090	HARNESS, BODY FRT WRG	01-02	YY07 (UZ6, U1S)	1	15329383
	5-N23	13.090	HARNESS, BODY FRT WRG	01-02	YY37	1	15329378
	5-N23	13.090	HARNESS, BODY FRT WRG	01-02	YY67 (UZ6) (EXC U1S) .	1	15329386
	5-N23	13.090	HARNESS, BODY FRT WRG	01-02	YY67 (UZ6, U1S)	1	15329387
2.	5-A22	10.485	BRACKET, R/CON DR LK RCVR .	01-02	Y	1	10282800
3.	5-A22	10.485	RECEIVER, R/CON DR LK (BLACK)	01-02	Y07-67 (EXC VD1)	1	10431034

cardiagn.com

							1Y10-046
	5-A22	10.485	RECEIVER, R/CON DR LK	01-02	YY37	1	10312535
	5-A22	10.485	RECEIVER, R/CON DR LK (BLACK)	01-02	YY37	1	10431034
4.		N.S.	RIVET, R/CON DR LK RCVR BRKT		.....		
5.	5-A25	10.526	CONNECTOR, MDL-KEYLESS ENTRY CONT (BLACK) (8-WAY F) (W/LEADS) (2.485) (AC-DELCO #PT709)	01-02	Y	1	12126438
	5-A25	10.526	CONNECTOR, MDL-KEYLESS ENTRY CONT (BLUE) (20 PIN, 4 WAY, W/LEADS) (2.188) (AC-DELCO #PT322)	01-02	Y	1	12102635
	5-N23	13.090	HARNESS, KEYLESS ENTRY WRG (ELEMENT)	01-02	Y (VD1)	1	10441963
6.		N.S.	BATTERY, R/CON DR LK XMTR ..		.....		
7.	5-A22	10.485	TRANSMITTER, R/CON DR LK (FOB #) (RKE RECIEVER LOCATED UNDER RR SHELF) ...	01-02	YY07-67 (EXC VD1, VE1)	1	25695954
	5-A22	10.485	TRANSMITTER, R/CON DR LK (FOB #2, RKE RECIEVER LOCATED UNDER RR SHELF) ...	01-02	YY07-67 (EXC VD1, VE1)	1	25695955
	5-A22	10.485	TRANSMITTER, R/CON DR LK (FOB #1) (RKE RECIEVER LOCATED UNDER RR SHELF) ...	01-02	YY37	1	25695954
	5-A22	10.485	TRANSMITTER, R/CON DR LK (FOB #2, RKE RECIEVER LOCATED UNDER RR SHELF) ...	01-02	YY37	1	25695955
	5-A22	10.485	TRANSMITTER, R/CON DR LK ..	01-02	Y07-67 (VD1) (EXPORT)	2	10407640

RPO DEFINITIONS
UZ6 – SPEAKER SYSTEM 6, QUAD FRT DR MTD, DUAL QTR MTD
U1S – PLAYER MULTIPLE COMPACT DISC
VD1 – PROVISION OPTIONS,EUROPE(EXPORT)
VE1 – PROVISION OPTIONS,JAPAN(EXPORT)

cardiagn.com

ILLUSTRATION INDEX

	TITLE	GRID
1997–2002	Y LAMPS/INTERIOR (COURTESY & INTERIOR CARGO)	5–14

cardiagn.com

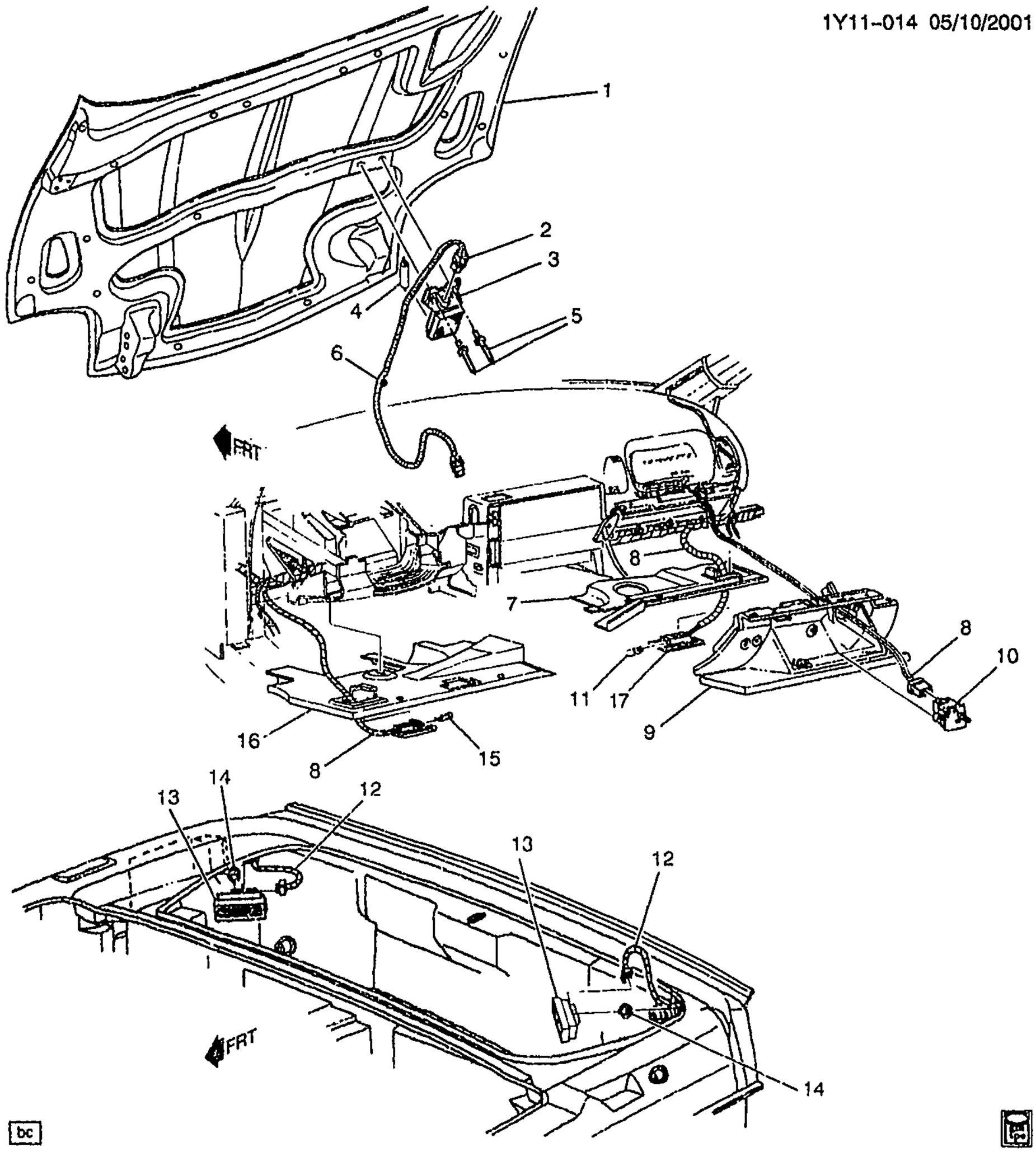

bc

1Y11-014

1997-2002 Y LAMPS/INTERIOR (COURTESY & INTERIOR CARGO)

1.	5-N9	8.000	HOOD, (TRADITIONAL HD & FRT HGED)	97-02 Y	1	10246445
2.	5-N11	8.890	CONNECTOR, LP-U/HOOD (BLACK) (2- WAY M) (W/O LEADS) (2.530)	97-00 Y	1	12162000

cardiagn.com

							1Y11-014
	5-N11	8.890	CONNECTOR, LP-U/HOOD (BLACK) (2-WAY M) (W/LEADS) (4.720) (AC-DELCO #PT786) ...	97-00	Y	1	12167120
	5-N11	8.890	CONNECTOR, LP-U/HOOD (BLACK) (2-WAY F W/LEADS) (2.383) (AC-DELCO #PT169) ...	97-02	Y	1	12101899
3.	5-N11	8.890	LAMP, U/HOOD (INCLS 4)	97-99	Y	1	25536936
	5-N11	8.890	LAMP, U/HOOD (INCLS 4)	00-02	Y	1	10303617
4.		8.991	BULB, 12CP ID 561 (U/HOOD LP) (PART OF 3) (AC-DELCO #L561)	97-02	.....	1	9433040
5.		8.967	RIVET, BLIND LG HD, .125-.187 GRIP (U/HOOD LP)	97-02	.....	2	9432552
6.	5-N11	8.890	HARNESS, U/HOOD LP WRG ...	97-98	Y	1	12163775
	5-N11	8.890	HARNESS, U/HOOD LP WRG ...	99-00	Y07-67	1	12163775
	5-N11	8.890	HARNESS, U/HOOD LP WRG ...	99-00	Y37 (TR9)	1	12163775
	5-N11	8.890	HARNESS, U/HOOD LP WRG ...	01-02	Y	1	12163775
7.	5-A16	10.230	INSULATOR, I/P (RED)	97	Y (94I)	RH	10406526
	5-A16	10.230	INSULATOR, I/P (BLACK)	97-02	Y (19I)	RH	10409462
	5-A16	10.230	INSULATOR, I/P (PEWTER)	97-02	Y (92I)	RH	10409463
	5-A16	10.230	INSULATOR, I/P (RED)	98-99	Y07-67 (94I)	RH	10406526
	5-A16	10.230	INSULATOR, I/P (OAK)	98-02	Y07-67 (67I)	RH	10409465
	5-A16	10.230	INSULATOR, I/P (RED)	00	Y07-67 (70I)	RH	10409466
	5-A16	10.230	INSULATOR, I/P (RED)	01-02	Y (70I)	RH	10409466
8.		N.S.	HARNESS, I/P WRG (SEE GROUP 10 FOR DETAILED ILLUSTRATD VIEW)		.....		
	5-A20	10.275	CONNECTOR, LP-I/P COMPT (2-WAY F W/LEADS) (3.887) (AC-DELCO #PT313)	97-98	Y	1	12102626
	5-A20	10.275	CONNECTOR, LP-I/P COMPT (2-WAY F W/LEADS W/INDEX TAB OTR EDGE OF CAVITY B) (2.535) (AC-DELCO #PT146) (BLACK, FOR 1ST DES SEE 12102616 (PT303)	99-00	Y (2ND DES)	1	12085535
	5-A20	10.275	CONNECTOR, LP-I/P COMPT (2-WAY F W/LEADS) (3.887) (AC-DELCO #PT313) (BLUE, FOR 2ND DES SEE 12085535 (PT146)	99	Y (1ST DES)	1	12102626
	5-A20	10.275	CONNECTOR, LP-I/P COMPT (2-WAY F W/LEADS W/INDEX TAB OTR EDGE OF CAVITY B) (2.535) (AC-DELCO #PT146) ...	01-02	Y	1	12085535
	5-A20	10.275	CONNECTOR, LP-I/P COMPT (2-WAY F W/LEADS W/INDEX TAB OTR EDGE OF CAVITY B) (2.535) (AC-DELCO #PT146) ...	02	YY67	1	12085535
9.	5-A18	10.260	COMPARTMENT, I/P (W/DR)	97-98	Y (94I)	1	10416644
	5-A18	10.260	COMPARTMENT, I/P (W/DR) (BLACK)	97-99	Y (19I)	1	10437318
	5-A18	10.260	COMPARTMENT, I/P (W/DR) (PEWTER)	97	Y (92I)	1	10437319
	5-A18	10.260	COMPARTMENT, I/P (W/DR) (PEWTER)	98-99	Y07-67 (92I)	1	10437319
	5-A18	10.260	COMPARTMENT, I/P (W/DR)	99	Y07-67 (94I)	1	10416644

cardiagn.com

							1Y11-014
	5-A18	10.260	COMPARTMENT, I/P (W/DR) (RED) (W/O MANUAL PSIR SUPPRESSION SWITCH 2ND DES SEE 10437316)	00	Y07-67 (C88, 70I) (1ST DES)	1	10408529
	5-A18	10.260	COMPARTMENT, I/P (W/DR) (BLACK) (W/MANUAL PSIR SUPPRESSION SWITCH, FOR 1 DES SEE 10437318)	00	Y (19I) (EXC C88) (2ND DES)	1	10437313
	5-A18	10.260	COMPARTMENT, I/P (W/DR) (OAK) (W/MANUAL PSIR SUPPRESSION SWITCH, FOR 1ST DES SEE 10437320)	00	Y07-67 (67I) (EXC C88) (2ND DES)	1	10437315
	5-A18	10.260	COMPARTMENT, I/P (W/DR) (RED) (W/MANUAL PSIR SUPPRESSION SWITCH 1ST DES SEE 10437321)	00	Y07-67 (70I) (EXC C88) (2ND DES)	1	10437316
	5-A18	10.260	COMPARTMENT, I/P (W/DR) (BLACK) (W/O MANUAL PSIR SUPPRESSION SWITCH, FOR 2ND DES SEE 10437313)	00	Y (C88, 19I) (1ST DES) .	1	10437318
	5-A18	10.260	COMPARTMENT, I/P (W/DR) (PEWTER) (W/O MANUAL PSIR SUPPRESSION SWITCH, FOR 2ND DES SEE 10437314)	00	Y07-67 (C88, 19I) (1ST DES)	1	10437319
	5-A18	10.260	COMPARTMENT, I/P (W/DR) (OAK) (W/O MANUAL PSIR SUPPRESSION SWITCH, FOR 2ND DES SEE 10437315)	00	Y07-67 (C88, 67I) (1ST DES)	1	10437320
	5-A18	10.260	COMPARTMENT, I/P (W/DR) (RED)	01-02	Y07-67 (C88, 70I)	1	10408529
	5-A18	10.260	COMPARTMENT, I/P (W/DR) (BLACK)	01-02	Y (19I) (EXC C88)	1	10437313
	5-A18	10.260	COMPARTMENT, I/P (W/DR) (OAK)	01-02	Y07-67 (67I) (EXC C88)	1	10437315
	5-A18	10.260	COMPARTMENT, I/P (W/DR) (RED)	01-02	Y (70I) (EXC C88)	1	10437316
	5-A18	10.260	COMPARTMENT, I/P (W/DR) (BLACK)	01-02	Y (C88, 19I)	1	10437318
	5-A18	10.260	COMPARTMENT, I/P (W/DR) (OAK)	01-02	Y (C88, 67I)	1	10437320
	5-A18	10.260	COMPARTMENT, I/P (W/DR) (PEWTER)	01-02	Y (C88, 92I)	1	10437319
	5-A18	10.260	COMPARTMENT, I/P (W/DR) (REMOVE SNAP COVER IF PSIR SUPRESSION SWITCH IS PRESENT.) (PEWTER) (W/MANUAL PSIR SUPPRESSION SWITCH, FOR 1ST DES SEE 10437319)	00	Y07-67 (92I) (EXC C88) (2ND DES)	1	10437319
	5-A18	10.260	COMPARTMENT, I/P (W/DR) (REMOVE SNAP COVER IF PSIR SUPRESSION SWITCH IS PRESENT.) (PEWTER)	01-02	Y07-67 (92I) (EXC C88)	1	10437319
10.	5-A20	10.275	SWITCH, I/P COMPT LP (INCLS LAMP)	97-98	Y	1	3523034
	5-A20	10.275	SWITCH, I/P COMPT LP (INCLS BULB)	99-02	Y	1	12450028

cardiagn.com

							1Y11-014
11.		8.991	TRADE#194, 12V, 2CP (I/P C/LP) (AC-DELCO #L194)	97-02	.....	1	9421330
12.	5-N23	13.090	HARNESS, BODY FRT WRG	97-98	Y07	1	12189550
	5-N23	13.090	HARNESS, BODY FRT WRG	98	Y67 (UZ6)	1	12189958
	5-N23	13.090	HARNESS, BODY FRT WRG	99-00	Y07 (EXC U1S)	1	12189597
	5-N23	13.090	HARNESS, BODY FRT WRG	99-00	Y07 (U1S)	1	12189889
	5-N23	13.090	HARNESS, BODY FRT WRG	99-00	Y37 (U1S)	1	12163772
	5-N23	13.090	HARNESS, BODY FRT WRG	99-00	Y37 (EXC U1S)	1	12189595
	5-N23	13.090	HARNESS, BODY FRT WRG	99-00	Y67 (EXC U1S)	1	12189599
	5-N23	13.090	HARNESS, BODY FRT WRG	99-00	Y67 (U1S)	1	12189962
	5-N23	13.090	HARNESS, BODY FRT WRG	01-02	YY07 (UZ6) (EXC U1S) .	1	15329382
	5-N23	13.090	HARNESS, BODY FRT WRG	01-02	YY07 (UZ6, U1S)	1	15329383
	5-N23	13.090	HARNESS, BODY FRT WRG	01-02	YY37	1	15329378
	5-N23	13.090	HARNESS, BODY FRT WRG	01-02	YY67 (UZ6) (EXC U1S) .	1	15329386
	5-N23	13.090	HARNESS, BODY FRT WRG	01-02	YY67 (UZ6, U1S)	1	15329387
	5-C17	11.927	CONNECTOR, LP-CTSY (2-WAY F W/LEADS W/INDEX TAB OTR EDGE OF CAVITY B) (2.535) (AC-DELCO #PT146) ...	97-02	Y	2	12085535
	5-C17	11.927	CONNECTOR, LP-CTSY (W/LEADS & LENS) (10.275) (AC-DELCO #LS66)	01-02	YY67	1	12166036
13.	5-N17	9.988	LAMP, CARGO	97-98	Y	2	10258647
	5-N17	9.988	LAMP, CARGO	99-00	Y07-67	2	10258647
	5-N17	9.988	LAMP, CARGO	99-00	Y37 (TR9)	2	10258647
	5-N17	9.988	LAMP, CARGO	01-02	Y	2	10258647
14.		8.991	SOCKET, WEDGE BASE INTERIOR LAMP .50X .63X.25 (CARGO LP BULB) (AC-DELCO #25085970)	97-02	.....	2	25085970
15.		8.991	TRADE#194. 12V, 2CP (I/P C/LP) (AC-DELCO #L194)	97-02	.....	1	9421330
16.	5-A16	10.230	INSULATOR, I/P	97-02	Y	LH	10421513
17.	5-C17	11.927	SOCKET, C/LP (W/LEADS & LENS) (10.275) (AC-DELCO #LS66)	97-98	.....	2	12166036
	5-C17	11.927	SOCKET, I/P C/LP (W/LEADS & LENS) (10.275) (AC-DELCO #LS66)	99-00	.....	2	12166036
	5-A20	10.275	SOCKET, I/P COMPT LP (W/LEADS & LENS) (AC-DELCO #LS66)	01-02	.....	2	12166036

RPO DEFINITIONS
C88 - SWITCH INFL RST I/P MDL MAN SUPPRESSION -- DELETE
TR9 - LAMP GROUP,COURTESY
UZ6 - SPEAKER SYSTEM 6, QUAD FRT DR MTD, DUAL QTR MTD
U1S - PLAYER MULTIPLE COMPACT DISC
19I - INTERIOR TRIM,BLACK
67I - INTERIOR TRIM,CAMEL
70I - INTERIOR TRIM,TORCH RED
92I - INTERIOR TRIM SHALE/PEWTER
94I - INTERIOR TRIM FIRETHORN RED (97)

cardiagn.com

10.027 ADHESIVE – DECAL – SPACER – WINDSHIELD, Windshield Glass

01	Y	12346392	1	48.10	ADHESIVE, W/S (08.800)	
98	Y67 INDY PACE CAR (Z4Z)	10405316	1	40.25	DECAL, W/S NA ("CORVETTE")	6–C10,1
97–02	Y	10407149	2	3.33	SPACER, W/S	5–D4,5
97–98	Y07	10295096	1	1563.38	WINDSHIELD	5–D4,14
98	Y67	10295097	1	1382.33	WINDSHIELD	5–D4,14
99–02	Y07 (EXC HEAD UP DISPLAY (UV6)	10295096	1	1563.38	WINDSHIELD	5–D4,14
99–02	Y07 HEAD UP DISPLAY (UV6)	10426713	1	2241.88	WINDSHIELD	5–D4,14
99–00	Y37–67 (EXC HEAD UP DISPLAY (UV6)	10295097	1	1382.33	WINDSHIELD	5–D4,14
99–00	Y37–67 HEAD UP DISPLAY (UV6)	10426714	1	2241.88	WINDSHIELD	5–D4,14
01–02	Y37	10426201	1	1269.90	WINDSHIELD	5–D7,11
01–02	Y67 (EXC HEAD UP DISPLAY (UV6)	10295097	1	1382.33	WINDSHIELD	5–D4,14
01–02	Y67 HEAD UP DISPLAY (UV6)	10426714	1	2241.88	WINDSHIELD	5–D4,14

10.051 MOLDING, Windshield Garnish Molding

97–02	Y	10247723	LH	67.25	MOLDING, W/S SI GARN	5–D4,17
97–02	Y	10247724	RH	67.25	MOLDING, W/S SI GARN	5–D4,35
97–98	Y	10431271	1	67.25	MOLDING, W/S UPR GARN	5–D4,8
99–02	Y07–67	10431271	1	67.25	MOLDING, W/S UPR GARN	5–D4,8

10.056 CLIP – RETAINER, Windshield Garnish Molding

97–02	Y	10289034	6	3.33	CLIP, W/S SI G/MLDG	5–D4,18
02	Y	10289034	3	3.33	CLIP, W/S SI G/MLDG	5–D4,18
97–98	Y	15748479	2	*.62	CLIP, W/S UPR G/MLDG (13.0MM WIDE) (YELLOW) (U–BASE) (16.575)	5–D4,6
99–02	Y07–67	15748479	2	*.62	CLIP, W/S UPR G/MLDG (13.0MM WIDE) (YELLOW) (U–BASE) (16.575)	5–D4,6
97–02	Y	20540336	2	3.45	RETAINER, W/S SI G/MLDG (PAINT TO MATCH) (FITS .18 HOLE, .7 LG, .43 OD, NYLON) (14.630)	5–D4,20

10.092 SEAL, Windshield

97–02	Y	10299765	1	8.05	SEAL, W/S (POSN #2) (1420 MM LG)	5–D10,21

10.093 MOLDING, Windshield Reveal Molding

97	Y07	10299306	LH	63.25	MOLDING, W/S SI RVL (BLACK)	5–D10,16
97	Y07	10299307	RH	63.25	MOLDING, W/S SI RVL (BLACK)	5–D10,16
98–02	Y07–67	10299306	LH	63.25	MOLDING, W/S SI RVL (BLACK)	5–D10,16
98–02	Y07–67	10299307	RH	63.25	MOLDING, W/S SI RVL (BLACK)	5–D10,16
99–02	Y37	10422996	RH	40.25	MOLDING, W/S SI RVL (BLACK)	5–D22,1
99–02	Y37	10422997	LH	40.25	MOLDING, W/S SI RVL (BLACK)	5–D22,1
99–02	Y37	10427732	1	8.05	MOLDING, W/S UPR RVL	5–D7,4

10.096 BOLT, Windshield Reveal Molding

98	Y	10180421	8	*.74	BOLT, W/S SI R/MLDG (M4.2X1.41X16) (SCREW–ROUND HD) (08.977)	

cardiagn.com

10.146 BLADE – WIPER, Windshield Wiper Blade

97–02	Y	10418003	2	19.65	BLADE, WSW (22") (TRICO)	5–E2,1
98–99	Y	12481121	2	11.65	BLADE, WSW (22") (AC–DELCO #18–22ASP) (ALL SEASON PLUS)	5–E2,1
99	Y	12481110	2	5.87	BLADE, WSW (22") (16.480) (AC–DELCO #18–22AS) (ALL SEASON)	5–E2,1
99	Y	12481139	2	14.68	BLADE, WSW (22") (16.480) (AC–DELCO #18–22WW) (WINTERBLADE)	5–E2,1
97–02	Y	22143943	2	*10.10	WIPER, W/S (22") (TRICO)	5–E2,2
99	Y	12481164	2	7.68	WIPER, W/S (9MM) (22") (TRICO) (AC–DELCO #18–22RFW) (REFILL, WIDE)	5–E2,2

10.147 ARM – CAP – NUT, Windshield Wiper Arm

97–02	Y	10424237	RH	45.00	ARM, WSW (W/NOZZLES)	5–E2,5
97–02	Y	10424238	LH	45.00	ARM, WSW (W/NOZZLE)	5–E2,6
97–02	Y	22155703	2	3.40	CAP, WSW TRANS NUT	5–E2,3
97–02	Y	3535261	2	*1.00	NUT, WSW ARM (8X1.25X6.8 GM510M)	5–E2,4

10.150 CONNECTOR – COVER KIT – MOTOR, Windshield Wiper Motor

97–02	Y	12129126	1	7.50	CONNECTOR, MOT–WSW (BLACK) (5–WAY F)	5–E2,15
02	YY67 4–SPD A/TRANS (M30), A/C FRT AUTO/AUX CONT (CJ2), T&T WHL (N37), (EXC TAIL & S/LP (T89) (EXPORT)	12129126	1	7.50	CONNECTOR, MOT–WSW (BLACK) (5–WAY F)	5–E2,15
99–02	Y W/CIR BD	12367295	1	81.75	COVER KIT, WSW MOT (AC–DELCO #12367295)	
97–02	Y	12363318	1	216.00	MOTOR, WSW (W/O CRANK ARM) (AC–DELCO #12363318)	5–E2,13

10.151 ARM, Windshield Wiper Motor Drive

97–02	Y	12494833	1	35.25	ARM, WSW MOT CRK	5–E2,28

10.152 BRACKET – MOUNTING KIT – NUT – SHIELD, Windshield Wiper Motor

97–02	Y	10264094	1	3.40	BRACKET, WSW MOT	5–D4,27
97–02	Y	22155673	1	35.25	MOUNTING KIT, WSW MOT	5–E2,27
97	Y	10237960	1	.46	NUT, WSW SYS MDL (M6X1.0) (10.512)	5–D4,11
98–02	Y	10410398	1	*.51	NUT, WSW SYS MDL (M6X1.0 ITR "D" THD) (10.512)	5–D4,11
97–02	Y	12365358	1	9.10	SHIELD, WSW & WSWA MOT SPH (RUBBER SHIELD MUST BE TUCKED IN ORDER NOT TO HAVE VALLEYS WHICH WILL HOLD WATER) (AC–DELCO #12365358)	5–E2,14

cardiagn.com

10.153 CONNECTOR – PUMP, Windshield Washer Pump

97–02	Y	12102747	1	21.73	CONNECTOR, MOT–WSWA PUMP (BLACK) (2–WAY F W/LEADS) (03.670) (AC–DELCO #PT374)	5–E2,26
97	Y	12125636	1	20.16	CONNECTOR, MOT–WSWA PUMP (4–WAY F) (W/LEADS) (280 SERIES) (12.243) (AC–DELCO #PT548)	5–E2,26
97–02	Y	22127653	1	39.00	PUMP, WSWA (FRONT) (AC–DELCO #22127653)	5–E2,25

10.154 CAP – CONNECTOR – CONTAINER – GROMMET – INDICATOR – STUD, Windshield Washer

97–02	Y	12363335	1	4.30	CAP, WSWA SOLV CNTNR (16.065) (AC–DELCO #12363335)	5–E2,16
97–02	Y ACTIVE BRAKE CTL (JL4)	12101899	1	18.52	CONNECTOR, SW–WSWA SOLV LVL (BLACK) (2–WAY F W/LEADS) (02.383) (AC–DELCO #PT169)	5–E2,21
97–02	Y	22155677	1	46.00	CONTAINER, WSWA SOLV	5–E2,18
97–02	Y	12363291	1	5.18	GROMMET, WSWA SOLV CNTNR (SMALL)	5–E2,23
97	Y	22039457	1	*.80	GROMMET, WSWA SOLV CNTNR (18.00 MM OD) (10.153)	5–E2,24
97–02	Y	22062337	2	4.30	GROMMET, WSWA SOLV CNTNR (AC–DELCO #22062337)	5–E2,24
97–02	Y	22110978	1	37.50	INDICATOR, WSWA SOLV LVL	5–E2,22
97–02	Y	10135646	2	3.33	STUD, WSWA SOLV CNTNR (M6 X 1 X 24) (01.271)	5–E2,20

10.155 HOSE, Windshield Washer

97–02	Y	22154854	1	9.19	HOSE, WSWA NOZ (#91)	5–E2,10

10.159 SUPPORT – TRANSMISSION, Windshield Wiper Transmission

97–02	Y	12463020	1	9.10	SUPPORT, WSW TRANS (10.152)	5–E2,29
97–02	Y	22155675	1	150.00	TRANSMISSION, WSW (AC–DELCO #22155675)	5–E2,12

10.163 BOLT – BRACKET – CONNECTOR – SWITCH, Windshield Wiper Control

98–99	Y	26036497	3	3.38	BOLT, WSW & WSWA SW CONN BRKT (M5X.8X15) (PAN HD TORX TAP) (06.760)	
01–02	YY07–67 4–SPD A/TRANS (M30), (EXC STRG COL (NP7) (EXPORT)	26014529	1	4.83	BOLT, WSW & WSWA SW CONN BRKT (M5X.8X11.5) (06.522)	
01–02	Y07–67 (EXC STRG COL (NP7) (EXPORT)	26014529	1	4.83	BOLT, WSW & WSWA SW CONN BRKT (M5X.8X11.5) (06.522)	
01–02	YY07–67 4–SPD A/TRANS (M30), (EXC STRG COL (NP7) (EXPORT)	26052963	1	5.35	BRACKET, WSW & WSWA SW (02.895)	4–F6,18
97	Y	12126021	1	55.08	CONNECTOR, SW–WSW (W/LEADS) (02.694)	
97–02	Y	26047377	1	149.91	SWITCH, WSW & WSWA (AC–DELCO #D6363D)	4–F6,4
	*EXPORT**********EXPORT**********EXPORT**********EXPORT**********EXPORT*					
97–02	Y	26047377	1	149.91	SWITCH, WSW & WSWA (AC–DELCO #D6363D)	4–F6,4

cardiagn.com

10.185 CONNECTOR – MIRROR – MIRROR KIT – MOTOR KIT, Inside/Outside Rear View

97–02	Y (EXC I/S RR VIEW MIR (DD8)	12102900	1	36.21	CONNECTOR, INLINE–TO I/S RR VIEW MIR (4–WAY F W/LEADS) (02.535) (AC–DELCO #PT382)	5–E8,11
99	Y07–67	15306078	1	65.28	CONNECTOR, INLINE–TO I/S RR VIEW MIR (7–WAY F) (W/LEADS) (AC–DELCO #PT1242)	5–E8,11
01–02	Y I/S RR VIEW MIR (DD8) ...	15306078	1	65.28	CONNECTOR, INLINE–TO I/S RR VIEW MIR (7–WAY F) (W/LEADS) (AC–DELCO #PT1242)	5–E8,11
01–02	YY67	12101827	1	37.50	CONNECTOR, INLINE–TO I/S RR VIEW MIR (8–WAY M) (W/LEADS) (02.535) (AC–DELCO #PT219)	5–E8,11
97–00	Y ELEC R/CON HTD MIR (DL8), (EXC ARABIC LANGUAGE MIRROR PROV (Z5X) (EXPORT)	12530714	RH	44.00	MIRROR KIT, O/S RR VIEW (W/CASE)	5–E5,4
97–02	Y ELEC R/CON HTD MIR (DL8)	12530715	LH	44.00	MIRROR KIT, O/S RR VIEW (W/CASE)	5–E5,4
01–02	Y O/S ELEC R/CON MIR (DD0)	12455610	LH		MIRROR KIT, O/S RR VIEW (W/CASE)	5–E5,4
01–02	Y ELEC R/CON HTD MIR (DL8), O/S ELEC R/CON MIR (DD0), (EXC ARABIC LANGUAGE MIRROR PROV (Z5X) (EXPORT)	12530714	RH	44.00	MIRROR KIT, O/S RR VIEW (W/CASE)	5–E5,4
97–00	Y	10295109	1	76.00	MIRROR, I/S RR VIEW (BLACK) (F–CAR DESIGN) (#84)	5–E8,5
01–02	Y (EXC I/S RR VIEW MIR (DD8)	10295109	.	76.00	MIRROR, I/S RR VIEW (BLACK) (F–CAR DESIGN) (#84)	5–E8,5
01–02	Y I/S RR VIEW MIR (DD8) ...	10433960	1	201.00	MIRROR, I/S RR VIEW	5–E8,5
97–02	Y ELEC R/CON HTD MIR (DL8), (EXC CONVENIENCE PKG (AAB)	10416055	LH	125.00	MIRROR, O/S RR VIEW (PAINT TO MATCH)	5–E5,3
97–00	Y ELEC R/CON HTD MIR (DL8), (EXC CONVENIENCE PKG (AAB)	10416056	RH	125.00	MIRROR, O/S RR VIEW (PAINT TO MATCH)	5–E5,3
97–02	Y ELEC R/CON HTD MIR (DL8), CONVENIENCE PKG (AAB)	10416057	LH	174.00	MIRROR, O/S RR VIEW (PAINT TO MATCH)	5–E5,3
97–00	Y CONVENIENCE PKG (AAB), ELEC R/CON HTD MIR (DL8), (EXC ARABIC LANGUAGE MIRROR PROV (Z5X) (EXPORT)	10416058	RH	174.00	MIRROR, O/S RR VIEW (PAINT TO MATCH) (ENGLISH LETTERING) .	5–E5,3
01–02	Y O/S ELEC R/CON MIR (DD0), ELEC R/CON HTD MIR (DL8), (EXC CONVENIENCE PKG (AAB)	10416056	RH	125.00	MIRROR, O/S RR VIEW (PAINT TO MATCH)	5–E5,3
01–02	Y CONVENIENCE PKG (AAB), O/S ELEC R/CON MIR (DD0), ELEC R/CON HTD MIR (DL8), (EXC ARABIC LANGUAGE MIRROR PROV (Z5X) (EXPORT)	10416058	RH	174.00	MIRROR, O/S RR VIEW (PAINT TO MATCH) (ENGLISH LETTERING) .	5–E5,3
01–02	Y CONVENIENCE PKG (AAB), O/S ELEC R/CON MIR (DD0)	10416321	LH	369.00	MIRROR, O/S RR VIEW (PAINT TO MATCH)	5–E5,3

cardiagn.com

10.185 CONNECTOR – MIRROR – MIRROR KIT – MOTOR KIT, Inside/Outside Rear View (Con't)

01–02	Y O/S ELEC R/CON MIR (DD0), (EXC CONVENIENCE PKG (AAB)	10416322	LH	253.00	MIRROR, O/S RR VIEW (PAINT TO MATCH)	5–E5,3
97–00	Y ELEC R/CON HTD MIR (DL8), (EXC CONVENIENCE PKG (AAB)	12530710	RH	60.75	MOTOR KIT, O/S RR VIEW MIR (ELEC/DEFOG) (10.186)	5–E5,1
97–02	Y ELEC R/CON HTD MIR (DL8), (EXC CONVENIENCE PKG (AAB)	12530711	LH	60.75	MOTOR KIT, O/S RR VIEW MIR (ELEC/DEFOG) (10.186)	5–E5,1
97–00	Y CONVENIENCE PKG (AAB), ELEC R/CON HTD MIR (DL8), (EXC ARABIC LANGUAGE MIRROR PROV (Z5X) (EXPORT)	12530712	RH	109.00	MOTOR KIT, O/S RR VIEW MIR (ELEC/DEFOG/MEMORY) (10.186)	5–E5,1
97–02	Y CONVENIENCE PKG (AAB), ELEC R/CON HTD MIR (DL8)	12530713	LH	109.00	MOTOR KIT, O/S RR VIEW MIR (ELEC/DEFOG/MEMORY) (10.186)	5–E5,1
01–02	Y O/S ELEC R/CON MIR (DD0), ELEC R/CON HTD MIR (DL8), (EXC CONVENIENCE PKG (AAB)	12530710	RH	60.75	MOTOR KIT, O/S RR VIEW MIR (ELEC/DEFOG) (10.186)	5–E5,1
01–02	Y CONVENIENCE PKG (AAB), O/S ELEC R/CON MIR (DD0), ELEC R/CON HTD MIR (DL8)	12530712	RH	109.00	MOTOR KIT, O/S RR VIEW MIR (ELEC/DEFOG/MEMORY) (10.186)	5–E5,1
	*EXPORT**********EXPORT**********EXPORT**********EXPORT**********EXPORT*					
97–00	Y CONVENIENCE PKG (AAB), ELEC R/CON HTD MIR (DL8), ARABIC LANGUAGE MIRROR PROV (Z5X) (EXPORT)	12534830	RH	65.25	MIRROR KIT, O/S RR VIEW (W/CASE)	5–E5,4
01–02	Y CONVENIENCE PKG (AAB), O/S ELEC R/CON MIR (DD0), ELEC R/CON HTD MIR (DL8), ARABIC LANGUAGE MIRROR PROV (Z5X) (EXPORT)	12534830	RH	65.25	MIRROR KIT, O/S RR VIEW (W/CASE)	5–E5,4

10.186 BULB, Rear View Mirror

97	Y07	16057072	LH	3.48	BULB, O/S RR VIEW MIR R/CONT SW (W/MEMORY, W/O BOOT) (09.276) (AC–DELCO #16057072)	5–E5,10
98–00	Y07–67	16057072	LH	3.48	BULB, O/S RR VIEW MIR R/CONT SW (W/MEMORY, W/O BOOT) (09.276) (AC–DELCO #16057072)	5–E5,10
01–02	Y	16057072	LH	3.48	BULB, O/S RR VIEW MIR R/CONT SW (09.276) (AC–DELCO #16057072)	5–E5,10

10.187 BRACKET, Inside Rear View Mirror

97–98	Y	25653132	1	8.50	BRACKET, I/S RR VIEW MIR	5–D4,7
99–00	Y HEAD UP DISPLAY (UV6) ..	20626174	1	8.95	BRACKET, I/S RR VIEW MIR	5–D4,7
99–00	Y (EXC HEAD UP DISPLAY (UV6)	25653132	1	8.50	BRACKET, I/S RR VIEW MIR	5–D4,7
01–02	Y07–67 HEAD UP DISPLAY (UV6)	20626174	1	8.95	BRACKET, I/S RR VIEW MIR	5–D4,7

© 2001 GENERAL MOTORS SERVICE PARTS OPERATIONS–CHEVROLET–15Y

cardiagn.com

10.187 BRACKET, Inside Rear View Mirror (Con't)

01–02	Y07–67 (EXC HEAD UP DISPLAY (UV6)	25653132	1	8.50	BRACKET, I/S RR VIEW MIR	5–D4,7
01–02	Y37	25653132	1	8.50	BRACKET, I/S RR VIEW MIR	5–D4,7
02	YY67 HEAD UP DISPLAY (UV6)	25653132	1	8.50	BRACKET, I/S RR VIEW MIR	5–D4,7

10.195 HARNESS – LENS, Sunshade Vanity Mirror

01	Y I/S RR VIEW MIR (DD8) ...	12189954	1	65.60	HARNESS, S/S ILLUM MIR WRG	
97–98	Y07	12529510	4	8.05	LENS, S/S ILLUM MIR LP	5–E8,14
99	Y07–67	12529510	4	8.05	LENS, S/S ILLUM MIR LP	5–E8,14
99	Y37 LP GRP (TR9)	12529510	4	8.05	LENS, S/S ILLUM MIR LP	5–E8,14
	*EXPORT****************EXPORT****************EXPORT****************EXPORT****************EXPORT*					
99	YY37 LP GRP (TR9)	12529510	2	8.05	LENS, S/S ILLUM MIR LP	5–E8,14
00–02	Y07–67	12529510	4	8.05	LENS, S/S ILLUM MIR LP	5–E8,14
00	Y37 LP GRP (TR9), CANADIAN (Z49), (C88)	12529510	4	8.05	LENS, S/S ILLUM MIR LP	5–E8,14
01	YY37 (C88)	12529510	2	8.05	LENS, S/S ILLUM MIR LP	5–E8,14
02	YY07–67 (C88)	12529510	2	8.05	LENS, S/S ILLUM MIR LP	5–E8,14
02	YY37 (C88)	12529510	2	8.05	LENS, S/S ILLUM MIR LP	5–E8,14

10.203 SUNSHADE, Windshield Sunshade

00–02	Y07–67 (C88), (EXC CANADIAN (Z49)	10442033	RH	70.50	SUNSHADE	5–E8,6
00–02	Y07–67 (C88), (EXC CANADIAN (Z49)	10442034	LH	70.50	SUNSHADE	5–E8,6
00	Y37 LP GRP (TR9), (C88), (EXC CANADIAN (Z49)	10442033	RH	70.50	SUNSHADE	5–E8,6
00	Y37 LP GRP (TR9), (C88), (EXC CANADIAN (Z49)	10442034	LH	70.50	SUNSHADE	5–E8,6
01–02	Y37 (C88), (EXC CANADIAN (Z49)	10442033	RH	70.50	SUNSHADE	5–E8,6
01–02	Y37 (C88), (EXC CANADIAN (Z49)	10442034	LH	70.50	SUNSHADE	5–E8,6
97	Y07	10426849	LH	70.50	SUNSHADE, (BLACK)	5–E8,6
97	Y07	10426850	RH	70.50	SUNSHADE, (BLACK)	5–E8,6
98	Y (EXC CANADIAN (Z49), (2ND DES)	10426849	LH	70.50	SUNSHADE, (BLACK) (W/1" EXPOSED RETAINER PIN) (FOR 1ST DES SEE 10407144)	5–E8,6
98	Y (EXC CANADIAN (Z49), (1ST DES)	10426849	LH	70.50	SUNSHADE, (BLACK) (W/2.5" EXPOSED RETAINER PIN) (FOR 2ND DES SEE 10426849)	5–E8,6
98	Y (EXC CANADIAN (Z49), (2ND DES)	10426850	RH	70.50	SUNSHADE, (BLACK) (W/1" EXPOSED RETAINER PIN) (FOR 1ST DES SEE 10407145)	5–E8,6
98	Y (EXC CANADIAN (Z49), (1ST DES)	10426850	RH	70.50	SUNSHADE, (BLACK) (W/2.5" EXPOSED RETAINER PIN) (FOR 2ND DES SEE 10426850)	5–E8,6
99	Y07–67 (EXC CANADIAN (Z49), (2ND DES)	10426849	LH	70.50	SUNSHADE, (BLACK) (W/1" EXPOSED RETAINER PIN) (FOR 1ST DES SEE 10407144)	5–E8,6
99	Y07–67 (EXC CANADIAN (Z49), (1ST DES)	10426849	LH	70.50	SUNSHADE, (BLACK) (W/2.5" EXPOSED RETAINER PIN) (FOR 2ND DES SEE 10426849)	5–E8,6
99	Y07–67 (EXC CANADIAN (Z49)	10426850	RH	70.50	SUNSHADE, (BLACK)	5–E8,6
99	Y37 (EXC LP GRP (TR9), CANADIAN (Z49), (2ND DES)	10426491	LH	70.50	SUNSHADE, (BLACK) (W/1" EXPOSED RETAINER PIN) (FOR 1ST DES SEE 10409387)	5–E20,6

cardiagn.com

10.203 SUNSHADE, Windshield Sunshade (Con't)

99	Y37 (EXC LP GRP (TR9), CANADIAN (Z49), (2ND DES)	10426492	RH	70.50	SUNSHADE, (BLACK) (W/1" EXPOSED RETAINER PIN) (FOR 1ST DES SEE 10409388)	5–E20,6
99–00	Y37 CANADIAN (Z49), (EXC LP GRP (TR9), (1ST DES) ..	10426493	LH	70.50	SUNSHADE, (1" EXPOSED RETAINER PIN) (BLACK) (EARLY 2000 VEHICLES BUILT W/O MANUAL PSIR SUPPRESSION SWITCH IN GLOVE BOX, FOR 2ND DESIGN SEE 10442035) .	5–E20,6
99–00	Y37 CANADIAN (Z49), (EXC LP GRP (TR9), (1ST DES) ..	10426494	RH	70.50	SUNSHADE, (1" EXPOSED RETAINER PIN) (BLACK) (EARLY 2000 VEHICLES BUILT W/O MANUAL PSIR SUPPRESSION SWITCH IN GLOVE BOX, FOR 2ND DESIGN SEE 10442035) .	5–E20,6
99	Y37 LP GRP (TR9), (EXC CANADIAN (Z49), (2ND DES)	10426849	LH	70.50	SUNSHADE, (BLACK) (W/1" EXPOSED RETAINER PIN) (FOR 1ST DES SEE 10407144)	5–E8,6
99	Y37 LP GRP (TR9), (EXC CANADIAN (Z49), (1ST DES)	10426849	LH	70.50	SUNSHADE, (BLACK) (W/2.5" EXPOSED RETAINER PIN) (FOR 2ND DES SEE 10426849)	5–E8,6
99	Y37 LP GRP (TR9), (EXC CANADIAN (Z49)	10426850	RH	70.50	SUNSHADE, (BLACK)	5–E8,6
00	Y07–67 CANADIAN (Z49), (1ST DES)	10426489	LH	70.50	SUNSHADE, (1" EXPOSED RETAINER PIN) (BLACK) (EARLY 2000 VEHICLES BUILT W/O MANUAL PSIR SUPPRESSION SWITCH IN GLOVE BOX, FOR 2ND DESIGN SEE 10442035) .	5–E8,6
00	Y07–67 CANADIAN (Z49), (1ST DES)	10426490	RH	70.50	SUNSHADE, (1" EXPOSED RETAINER PIN) (BLACK) (EARLY 2000 VEHICLES BUILT W/O MANUAL PSIR SUPPRESSION SWITCH IN GLOVE BOX, FOR 2ND DESIGN SEE 10442035) .	5–E8,6
00	Y07–67 CANADIAN (Z49), (2ND DES)	10442035	RH	70.50	SUNSHADE, (1" EXPOSED RETAINER PIN) (LATER 2000 VEHICLES W/MANUAL PSIR SUPPRESSION SWITCH IN GLOVEBOX, FOR 1ST DESIGN SEE 10426490)	5–E8,6
00	Y07–67 CANADIAN (Z49), (2ND DES)	10442036	LH	70.50	SUNSHADE, (1" EXPOSED RETAINER PIN) (LATER 2000 VEHICLES W/MANUAL PSIR SUPPRESSION SWITCH IN GLOVEBOX, FOR 1ST DESIGN SEE 10426490)	5–E8,6
00	Y37 LP GRP (TR9), CANADIAN (Z49), (1ST DES)	10426489	LH	70.50	SUNSHADE, (1" EXPOSED RETAINER PIN) (BLACK) (EARLY 2000 VEHICLES BUILT W/O MANUAL PSIR SUPPRESSION SWITCH IN GLOVE BOX, FOR 2ND DESIGN SEE 10442035) .	5–E8,6
00	Y37 LP GRP (TR9), CANADIAN (Z49), (1ST DES)	10426490	RH	70.50	SUNSHADE, (1" EXPOSED RETAINER PIN) (BLACK) (EARLY 2000 VEHICLES BUILT W/O MANUAL PSIR SUPPRESSION SWITCH IN GLOVE BOX, FOR 2ND DESIGN SEE 10442035) .	5–E8,6

cardiagn.com

10.203 SUNSHADE, Windshield Sunshade (Con't)

00	Y37 (EXC LP GRP (TR9), CANADIAN (Z49), (1ST DES)	10426491	LH	70.50	SUNSHADE, (1" EXPOSED RETAINER PIN) (BLACK) (EARLY 2000 VEHICLES BUILT W/O MANUAL PSIR SUPPRESSION SWITCH IN GLOVE BOX, FOR 2ND DESIGN SEE 10442035) .	5–E20,6
00	Y37 (EXC LP GRP (TR9), CANADIAN (Z49), (1ST DES)	10426492	RH	70.50	SUNSHADE, (1" EXPOSED RETAINER PIN) (BLACK) (EARLY 2000 VEHICLES BUILT W/O MANUAL PSIR SUPPRESSION SWITCH IN GLOVE BOX, FOR 2ND DESIGN SEE 10442035) .	5–E20,6
00	Y37 LP GRP (TR9), CANADIAN (Z49), (2ND DES)	10442035	RH	70.50	SUNSHADE. (1" EXPOSED RETAINER PIN) (LATER 2000 VEHICLES W/MANUAL PSIR SUPPRESSION SWITCH IN GLOVEBOX, FOR 1ST DESIGN SEE 10426490)	5–E8,6
00	Y37 LP GRP (TR9), CANADIAN (Z49), (2ND DES)	10442036	LH	70.50	SUNSHADE, (1" EXPOSED RETAINER PIN) (LATER 2000 VEHICLES W/MANUAL PSIR SUPPRESSION SWITCH IN GLOVEBOX, FOR 1ST DESIGN SEE 10426490)	5–E8,6
00	Y37 (EXC LP GRP (TR9), CANADIAN (Z49), (2ND DES)	10442037	RH	70.50	SUNSHADE, (1" EXPOSED RETAINER PIN) (LATER 2000 VEHICLES W/MANUAL PSIR SUPPRESSION SWITCH IN GLOVEBOX, FOR 1ST DESIGN SEE 10426490)	5–E20,6
00	Y37 (EXC LP GRP (TR9), CANADIAN (Z49), (2ND DES)	10442038	LH	70.50	SUNSHADE, (1" EXPOSED RETAINER PIN) (LATER 2000 VEHICLES W/MANUAL PSIR SUPPRESSION SWITCH IN GLOVEBOX, FOR 1ST DESIGN SEE 10426490)	5–E20,6
00	Y37 CANADIAN (Z49), (EXC LP GRP (TR9), (2ND DES) ..	10442039	RH	70.50	SUNSHADE, (1" EXPOSED RETAINER PIN) (LATER 2000 VEHICLES W/MANUAL PSIR SUPPRESSION SWITCH IN GLOVEBOX, FOR 1ST DESIGN SEE 10426490)	5–E20,6
00	Y37 CANADIAN (Z49), (EXC LP GRP (TR9), (2ND DES) ..	10442040	LH	70.50	SUNSHADE, (1" EXPOSED RETAINER PIN) (LATER 2000 VEHICLES W/MANUAL PSIR SUPPRESSION SWITCH IN GLOVEBOX, FOR 1ST DESIGN SEE 10426490)	5–E20,6
01–02	Y CANADIAN (Z49)	10442035	RH	70.50	SUNSHADE, (1" EXPOSED RETAINER PIN)	5–E8,6
01–02	Y CANADIAN (Z49)	10442036	LH	70.50	SUNSHADE, (1" EXPOSED RETAINER PIN)	5–E8,6
	*EXPORT*****************EXPORT*****************EXPORT*****************EXPORT*****************EXPORT*					
00–02	Y07–67 (EXC C88)	10426849	LH	70.50	SUNSHADE, (BLACK)	5–E8,6
00–02	Y07–67 (EXC C88)	10426850	RH	70.50	SUNSHADE, (BLACK)	5–E8,6

10.219 BEZEL – BOLT – RETAINER, Windshield Sunshade

97–02	Y	10431402	LH	3.45	BEZEL, S/S ROD (BLACK)	5–E8,9
97–02	Y	10431403	RH	3.45	BEZEL, S/S ROD (BLACK)	5–E8,9

cardiagn.com

10.219 BEZEL – BOLT – RETAINER, Windshield Sunshade (Con't)

97–02	Y	15613054	AR	*.67	BOLT, S/S RET (4.8X1.59X20.0 NO) (08.133)	
99–00	Y	15982575	2	*.52	BOLT, S/S RET (M4.2X.79X25, 12.50) (02.559)	
97–02	Y	10411051	2	*1.05	RETAINER, S/S	5–E8,1

10.230 BAR – BRACKET – INSULATOR – NUT – REINFORCEMENT – RETAINER – SPACER, Instrument Panel

97–02	Y	10425866	1	141.00	BAR, I/P TIE (#47)	5–E25,32
97–98	Y	10409654	1	120.00	BRACKET, I/P CTR SUPT	5–E25,13
98–02	Y	10409133	1	3.45	BRACKET, I/P CTR SUPT	5–F14,39
99–02	Y	10433229	1	118.00	BRACKET, I/P CTR SUPT	5–F14,13
97	Y (94I)	10406526	RH	34.50	INSULATOR, I/P (RED)	5–E25,23
97–02	Y (19I)	10409462	RH	34.50	INSULATOR, I/P (BLACK)	5–E25,23
97–02	Y (92I)	10409463	RH	34.50	INSULATOR, I/P (PEWTER)	5–E25,23
97–02	Y	10421513	LH	34.00	INSULATOR, I/P	5–E25,30
98–99	Y07–67 (94I)	10406526	RH	34.50	INSULATOR, I/P (RED)	5–E25,23
98–02	Y07–67 (67I)	10409465	RH	34.50	INSULATOR, I/P (OAK)	5–F14,23
00	Y07–67 (70I)	10409466	RH	34.50	INSULATOR, I/P (RED)	5–F18,23
01–02	Y (70I)	10409466	RH	34.50	INSULATOR, I/P (RED)	5–F18,23
97–02	Y	10281487	2	*.69	NUT, I/P CTR SUPT BRKT (AT I/P CTR BRKT) (04.665)	5–E25,33
97–02	Y	25536302	7	3.33	NUT, I/P CTR SUPT BRKT (4.2X1.41 TAPPING) (SPL) (03.430)	5–E25,12
97–02	Y	10281487	10	*.69	NUT, I/P LWR TIE BAR (04.665)	5–E25,33
97–02	Y	10290611	1	10.10	REINFORCEMENT, I/P TIE BAR (POSN #1)	6–D5,45
97–02	Y	10290612	1	10.10	REINFORCEMENT, I/P TIE BAR (POSN #2)	6–D5,45
98–02	Y	10279623	RH	*.54	RETAINER, I/P INSL (PEWTER) (14.640)	5–F14,24
98–02	Y	10279623	LH	*.54	RETAINER, I/P INSL (PEWTER) (14.640)	5–F14,24
97–02	Y	20538173	2	3.45	RETAINER, I/P TIE BAR (BLACK) (4.8 HOLE) (14.685)	6–D5,48
97–02	Y	10149281	AR	3.45	SPACER, I/P (07.832)	5–E25,40

10.235 BRACKET – NUT – PAD – PANEL – RETAINER, Instrument Panel Pad

97–02	Y	10289379	1	91.75	BRACKET, I/P DRVR KNEE BOLS (10.230)	5–F6,16
97–02	Y	10289378	1	27.00	BRACKET, I/P DRVR KNEE BOLS OTR	3–H22,17
97–02	Y	10282775	1	20.30	BRACKET, I/P PASS KNEE BOLS	5–F2,7
97–02	Y	25536302	4	3.33	NUT, I/P DRVR KNEE BOLS BRKT (4.2X1.41 TAPPING) (SPL) (03.430)	5–F6,13
97–02	Y	25536302	1	3.33	NUT, I/P DRVR KNEE BOLS OTR BRKT (4.2X1.41 TAPPING) (SPL) (03.430)	5–F6,13
97	Y	10237960	4	.46	NUT, I/P PASS KNEE BOLS (M6X1.0) (10.512)	7–G2,13
98–00	Y	10410398	4	*.51	NUT, I/P PASS KNEE BOLS (M6X1.0 ITR "D" THD) (10.512)	7–G2,13
97–02	Y	17988488	6	*1.03	NUT, I/P UPR TR PAD (TO I/P) (M4.2X1.41) (PUSH–IN FOR 12MM SQ HOLE) (10.252)	5–F6,14
97–02	Y	25536302	2	3.33	NUT, I/P UPR TR PAD (4.2X1.41 TAPPING) (SPL) (03.430)	5–F6,13

cardiagn.com

10.235 BRACKET – NUT – PAD – PANEL – RETAINER, Instrument Panel Pad (Con't)

97–02	Y (EXC HEAD UP DISPLAY (UV6)	10303150	1	745.00	PAD, I/P UPR TR (W/ OTLTS & DUCTS) (BLACK)	5–F6,5
97–98	Y	10406513	1	745.00	PAD, I/P UPR TR (BLACK)	5–F6,5
97–02	Y (EXC HEAD UP DISPLAY (UV6)	10443974	1	745.00	PAD, I/P UPR TR (LESS OTLTS & DUCTS) (BLACK)	5–F6,5
99–02	Y HEAD UP DISPLAY (UV6)	10303149	1	745.00	PAD, I/P UPR TR (INCLS BEZELS, DUCT & OUTLETS) (BLACK)	5–G2,5
99–00	Y (EXC HEAD UP DISPLAY (UV6)	10406513	1	745.00	PAD, I/P UPR TR (BLACK)	5–F6,5
99–02	Y HEAD UP DISPLAY (UV6)	10443975	1	745.00	PAD, I/P UPR TR (LESS BEZELS, DUCT & OUTLETS) (BLACK)	5–G2,5
97–02	Y (19I)	10426429	1	74.50	PANEL, I/P DRVR KNEE BOLS (BLACK)	5–F6,22
97–98	Y (94I)	10426431	1	74.50	PANEL, I/P DRVR KNEE BOLS (RED)	5–F6,22
97	Y07 (92I)	10426430	1	74.50	PANEL, I/P DRVR KNEE BOLS (PEWTER)	5–F6,22
98–02	Y07–67 (92I)	10426430	1	74.50	PANEL, I/P DRVR KNEE BOLS (PEWTER)	5–F6,22
98–02	Y07–67 (67I)	10426432	1	74.50	PANEL, I/P DRVR KNEE BOLS (CAMEL)	5–F6,22
99	Y07–67 (94I)	10426431	1	74.50	PANEL, I/P DRVR KNEE BOLS (RED)	5–F6,22
00	Y07–67 (70I)	10426433	1	74.50	PANEL, I/P DRVR KNEE BOLS (RED)	5–G2,22
01–02	Y (70I)	10426433	1	74.50	PANEL, I/P DRVR KNEE BOLS (RED)	5–G2,22
97–02	Y	21040288	2	*.53	RETAINER, I/P DRVR KNEE BOLS PNL (PUSH IN)	5–F6,21

10.240 BUMPER – CONSOLE – FILLER – PROTECTOR, Floor Console

97–00	Y	10284921	2	3.45	BUMPER, F/FLR COMPT DR (10.242)	5–H2,10
01–02	Y	10313054	2	3.45	BUMPER, F/FLR COMPT DR	5–H2,10
97–99	Y	12458556	1	152.00	CONSOLE, F/FLR (IT WILL BE NECESSARY TO USE AUX PWR RECPT 12450044, RECPT RETAINER 12450047 & RECPT CONN 15305985)	5–H2,9
00–02	Y	12458556	1	152.00	CONSOLE, F/FLR	5–H2,9
01–02	Y	12458556	1	152.00	CONSOLE, F/FLR	5–H2,9
97–02	Y	10247710	2	3.45	FILLER, F/FLR CNSL COMPT	5–H2,6
97–02	Y	10247709	1	23.35	PROTECTOR, F/FLR CNSL COMPT (BLACK)	5–H2,5

10.242 BOLT – DOOR – HINGE – NUT, Floor Console Compartment Door

97–02	Y	3539991	4	3.40	BOLT, F/FLR CNSL COMPT DR HGE (M4.2X1.41X12) (10.685)	
97–02	Y	10247708	1	174.00	DOOR, F/FLR CNSL COMPT	5–H2,2
97–02	Y	10268321	1	20.81	HINGE, F/FLR CNSL COMPT DR	5–H2,29
97–02	Y	10175813	4	3.33	NUT, F/FLR CNSL COMPT DR HGE (10.252)	5–H2,12

10.252 BOLT – CLIP – GRILLE – NUT – PLATE, Instrument Panel Trim

97–02	Y	15659231	4	*1.34	BOLT, I/P ACSRY BZL (M4.2X1.41X16 TORX RND HD) (16.069)	5–F6,27
97–02	Y	10400761	3	3.33	BOLT, I/P ACSRY TR PLT	5–E25,19

© 2001 GENERAL MOTORS SERVICE PARTS OPERATIONS–CHEVROLET–15Y

cardiagn.com

10.252 BOLT – CLIP – GRILLE – NUT – PLATE, Instrument Panel Trim (Con't)

97–02	Y	10195501	2	3.33	CLIP, ACSRY SW PNL (10.230)	4–E4,61
97–02	Y	10268306	1	4.90	GRILLE, I/P ACSRY TR PLT	5–E25,18
97–02	Y	25607262	2	3.33	NUT, I/P ACSRY TR PLT (10.230)	
97–02	Y	10407815	1	113.00	PLATE, I/P ACSRY TR	5–E25,16

10.256 PLUG, Instrument Panel Opening

97–02	Y	22539445	2	*.52	PLUG, I/P COMPT ACC HOLE (34.8 OD 2.5 THK) (POLYETHYLENE) (08.010)	5–E25,5

10.260 COMPARTMENT – DOOR – MAT – RETAINER, Instrument Panel

97–98	Y (94I)	10416644	1	186.00	COMPARTMENT, I/P (W/DR)	5–E25,1
97–99	Y (19I)	10437318	1	186.00	COMPARTMENT, I/P (W/DR) (BLACK)	5–E25,1
97	Y (92I)	10437319	1	186.00	COMPARTMENT, I/P (W/DR) (PEWTER)	5–E25,1
98–99	Y07–67 (92I)	10437319	1	186.00	COMPARTMENT, I/P (W/DR) (PEWTER)	5–E25,1
99	Y07–67 (94I)	10416644	1	186.00	COMPARTMENT, I/P (W/DR)	5–E25,1
00	Y (19I), (C88), (2ND DES)	10437313	1	186.00	COMPARTMENT, I/P (W/DR) (BLACK) (W/MANUAL PSIR SUPPRESSION SWITCH, FOR 1 DES SEE 10437318)	5–F18,1
00	Y (EXC C88), (19I), (1ST DES)	10437318	1	186.00	COMPARTMENT, I/P (W/DR) (BLACK) (W/O MANUAL PSIR SUPPRESSION SWITCH, FOR 2ND DES SEE 10437313)	5–E25,1
00	Y07–67 (EXC C88), (70I), (1ST DES)	10408529	1	186.00	COMPARTMENT, I/P (W/DR) (RED) (W/O MANUAL PSIR SUPPRESSION SWITCH 2ND DES SEE 10437316)	5–F18,1
00	Y07–67 (67I), (C88), (2ND DES)	10437315	1	186.00	COMPARTMENT, I/P (W/DR) (OAK) (W/MANUAL PSIR SUPPRESSION SWITCH, FOR 1ST DES SEE 10437320)	5–F18,1
00	Y07–67 (70I), (C88), (2ND DES)	10437316	1	186.00	COMPARTMENT, I/P (W/DR) (RED) (W/MANUAL PSIR SUPPRESSION SWITCH 1ST DES SEE 10437321)	5–F18,1
00	Y07–67 (EXC C88), (19I), (1ST DES)	10437319	1	186.00	COMPARTMENT, I/P (W/DR) (PEWTER) (W/O MANUAL PSIR SUPPRESSION SWITCH, FOR 2ND DES SEE 10437314)	5–E25,1
00	Y07–67 (92I), (C88), (2ND DES)	10437319	1	186.00	COMPARTMENT, I/P (W/DR) (REMOVE SNAP COVER IF PSIR SUPRESSION SWITCH IS PRESENT.) (PEWTER) (W/MANUAL PSIR SUPPRESSION SWITCH, FOR 1ST DES SEE 10437319)	5–E25,1
00	Y07–67 (EXC C88), (67I), (1ST DES)	10437320	1	186.00	COMPARTMENT, I/P (W/DR) (OAK) (W/O MANUAL PSIR SUPPRESSION SWITCH, FOR 2ND DES SEE 10437315)	5–F18,1
01–02	Y (19I), (C88)	10437313	1	186.00	COMPARTMENT, I/P (W/DR) (BLACK)	5–F18,1
01–02	Y (70I), (C88)	10437316	1	186.00	COMPARTMENT, I/P (W/DR) (RED)	5–F18,1
01	Y (EXC C88), (19I)	10437318	1	186.00	COMPARTMENT, I/P (W/DR) (BLACK)	5–E25,1

cardiagn.com

10.260 COMPARTMENT – DOOR – MAT – RETAINER, Instrument Panel (Con't)

01	Y (EXC C88), (92I)	10437319	1	186.00	COMPARTMENT, I/P (W/DR) (PEWTER)	5–E25,1
01	Y (EXC C88), (67I)	10437320	1	186.00	COMPARTMENT, I/P (W/DR) (OAK)	5–F18,1
01–02	Y07–67 (EXC C88), (70I)	10408529	1	186.00	COMPARTMENT, I/P (W/DR) (RED)	5–F18,1
01–02	Y07–67 (67I), (C88)	10437315	1	186.00	COMPARTMENT, I/P (W/DR) (OAK)	5–F18,1
01–02	Y07–67 (92I), (C88)	10437319	1	186.00	COMPARTMENT, I/P (W/DR) (REMOVE SNAP COVER IF PSIR SUPRESSION SWITCH IS PRESENT.) (PEWTER)	5–E25,1
02	Y (EXC C88), (19I)	10437318	1	186.00	COMPARTMENT, I/P (W/DR) (BLACK)	5–E25,1
02	Y (EXC C88), (92I)	10437319	1	186.00	COMPARTMENT, I/P (W/DR) (PEWTER)	5–E25,1
02	Y (EXC C88), (67I)	10437320	1	186.00	COMPARTMENT, I/P (W/DR) (OAK)	5–F18,1
97–02	Y	10268305	1	6.05	DOOR, I/P CUP HLDR	5–E25,28
97–02	Y	10274116	1	20.05	MAT, I/P CUP HLDR	5–E25,25
97–02	Y	10401217	2	3.45	RETAINER, I/P CUP HLDR (10.242)	5–E25,21

10.262 PIN, Instrument Panel Compartment Door

97–02	Y	10280060	2	2.45	PIN, I/P COMPT DR HGE	5–E25,3

10.263 BUMPER, Instrument Panel Compartment Door

97–02	Y	10280061	1	10.55	BUMPER, I/P COMPT	5–F14,47
97–02	Y	10285822	2	65.75	BUMPER, I/P COMPT DR STOP .	5–E25,10

10.266 CYLINDER – LOCK – SHUTTER – SPRING – TUMBLER, Instrument Panel Compartment Door Lock

97–02	Y	12523746	1	14.70	CYLINDER, F/FLR CNSL COMPT DR LK (UNCODED)	5–H2,18
97–02	Y	12534394	1	13.30	CYLINDER, I/P COMPT DR LK (UNCODED)	5–E25,8
97–02	Y (19I)	22658999	1	27.00	LOCK, I/P COMPT DR (BLACK) ..	5–E25,1
97	Y (92I)	22659000	1	27.00	LOCK, I/P COMPT DR (PEWTER)	5–E25,1
97	Y (94I)	22659001	1	27.00	LOCK, I/P COMPT DR (RED)	5–E25,1
98–02	Y07–67 (92I)	22659000	1	27.00	LOCK, I/P COMPT DR (PEWTER)	5–E25,1
98–99	Y07–67 (94I)	22659001	1	27.00	LOCK, I/P COMPT DR (RED)	5–E25,1
98–01	Y07–67 (67I)	22659002	1	27.00	LOCK, I/P COMPT DR (CAMEL) .	5–F14,46
00–01	Y07–67 (70I)	22659001	1	27.00	LOCK, I/P COMPT DR (RED)	5–E25,1
00–01	Y07–67 (70I)	22674760	1	27.00	LOCK, I/P COMPT DR (TORCH RED)	5–G23,46
02	Y (67I)	22659002	1	27.00	LOCK, I/P COMPT DR (CAMEL) .	5–F14,46
02	Y (92I)	22659002	1	27.00	LOCK, I/P COMPT DR (CAMEL) .	5–F14,46
02	Y (70I)	22674760	1	27.00	LOCK, I/P COMPT DR (TORCH RED)	5–G23,46
02	Y07–67 (67I)	22659000	1	27.00	LOCK, I/P COMPT DR (PEWTER)	5–E25,1
97–02	Y	12534395	1	5.85	SHUTTER, F/FLR CNSL COMPT DR LK CYL	5–H2,23
97–02	Y	12503691	2	3.33	SPRING, F/FLR CNSL COMPT DR LK CYL SHUTTER (10.552)	5–H2,24
97–02	Y	6259315	5	*.61	SPRING, F/FLR CNSL COMPT DR LK CYL TUMB (SNAP IN) (10.268)	5–E25,41
97–02	Y	20496065	1	*.52	SPRING, I/P COMPT DR LK CYL ANTI–ROTATION TUMB (ANTI–RATTLE)	5–E25,41
97–02	Y	6259315	4	*.61	SPRING, I/P COMPT DR LK CYL TUMB (SNAP IN) (10.268)	5–E25,41

cardiagn.com

10.266 CYLINDER – LOCK – SHUTTER – SPRING – TUMBLER, Instrument Panel Compartment Door Lock (Con't)

97–02	Y	12522877	1	*.51	TUMBLER, F/FLR CNSL COMPT DR LK CYL (#1)	5–E25,42
97–02	Y	12522878	1	.23	TUMBLER, F/FLR CNSL COMPT DR LK CYL (#2)	5–E25,42
97–02	Y	12522879	1	*.51	TUMBLER, F/FLR CNSL COMPT DR LK CYL (#3)	5–E25,42
97–02	Y	12522880	1	*.51	TUMBLER, F/FLR CNSL COMPT DR LK CYL (#4)	5–E25,42
97–02	Y	12522877	AR	*.51	TUMBLER, I/P COMPT DR LK CYL (#1)	5–E25,42
97–02	Y	12522878	AR	.23	TUMBLER, I/P COMPT DR LK CYL (#2)	5–E25,42
97–02	Y	12522879	AR	*.51	TUMBLER, I/P COMPT DR LK CYL (#3)	5–E25,42
97–02	Y	12522880	AR	*.51	TUMBLER, I/P COMPT DR LK CYL (#4)	5–E25,42
97–02	Y	12522881	1	*.51	TUMBLER, I/P COMPT DR LK CYL ANTI–ROTATION	5–E25,42

10.267 CAP – RETAINER, Instrument Panel Compartment Door Lock

97–02	Y	20496886	1	3.40	CAP, F/FLR CNSL COMPT DR LK CYL (12.248)	5–H2,22
97–02	Y	10298275	1	3.45	RETAINER, F/FLR COMPT DR LK CYL	5–H2,13

10.268 BOLT – LATCH – NUT – RETAINER – STRIKER, Instrument Panel Compartment Door Lock and Console Compartment Door Lock

97–02	Y	3539991	2	3.40	BOLT, F/FLR COMPT DR LAT STKR (M4.2X1.41X12) (10.685)	5–H2,11
97–02	Y F/SEAT INFL RST SYS (AK5)	10281420	1	3.33	BOLT, I/P COMPT DR LK STKR	7–G2,12
97–02	Y	10268314	1	8.50	LATCH, F/FLR CNSL COMPT DR	5–H2,15
97–02	Y	12534396	1	8.50	LATCH, F/FLR CNSL COMPT DR LK CYL	5–H2,27
97–02	Y	10175813	2	3.33	NUT, F/FLR COMPT DR LAT STKR (10.252)	5–H2,14
97–02	Y F/SEAT INFL RST SYS (AK5)	10279292	2	3.33	NUT, I/P COMPT DR LK STKR	7–G2,12
97–02	Y	20650814	1	*.52	RETAINER, F/FLR CNSL COMPT DR LK CYL LAT (12.945)	5–H2,26
97–02	Y F/SEAT INFL RST SYS (AK5)	10269700	1	24.05	STRIKER, I/P COMPT DR LK	7–G2,12

10.275 CONNECTOR – SOCKET – SWITCH, Instrument Panel Compartment Lamp

97–98	Y	12102626	1	14.28	CONNECTOR, LP–I/P COMPT (2–WAY F W/LEADS) (03.887) (AC–DELCO #PT313)	5–F2,9
99–00	Y (2ND DES)	12085535	1	18.01	CONNECTOR, LP–I/P COMPT (2–WAY F W/LEADS W/INDEX TAB OTR EDGE OF CAVITY B) (02.535) (BLACK, FOR 1ST DES SEE 12102616 (PT303) (AC–DELCO #PT146)	5–G16,9

cardiagn.com

10.275 CONNECTOR – SOCKET – SWITCH, Instrument Panel Compartment Lamp (Con't)

99	Y (1ST DES)	12102626	1	14.28	CONNECTOR, LP–I/P COMPT (2–WAY F W/LEADS) (03.887) (BLUE, FOR 2ND DES SEE 12085535 (PT146) (AC–DELCO #PT313)	5–F2,9
01–02	Y	12085535	1	18.01	CONNECTOR, LP–I/P COMPT (2–WAY F W/LEADS W/INDEX TAB OTR EDGE OF CAVITY B) (02.535) (AC–DELCO #PT146)	5–G16,9
02	YY67	12085535	1	18.01	CONNECTOR, LP–I/P COMPT (2–WAY F W/LEADS W/INDEX TAB OTR EDGE OF CAVITY B) (02.535) (AC–DELCO #PT146)	5–G16,9
98–02	Y	12166036	1	50.49	SOCKET, I/P COMPT LP (CONSIST OF 12052194 W/LEADS. WEDGE BASE W2.) (W/LEADS & LENS) (AC–DELCO #LS66)	5–I4,17
97–98	Y	3523034	1	6.75	SWITCH, I/P COMPT LP (INCLS LAMP)	5–F2,9
99–02	Y	12450028	1	5.25	SWITCH, I/P COMPT LP (INCLS BULB)	5–G16,9

10.351 DOOR, Front Door

97–02	Y	10414235	LH	654.00	DOOR, FRT SI	5–H7,2
97–99	Y	10414236	RH	654.00	DOOR, FRT SI	5–H7,2
00–02	Y	10433526	RH	654.00	DOOR, FRT SI	5–H12,2

10.355 ABSORBER – DEFLECTOR – SEAL, Door Inner Panel

98–02	Y	10427263	LH	13.10	ABSORBER, FRT S/D INR PNL UPR ENGY	7–E7,40
98–02	Y	10427275	RH	13.10	ABSORBER, FRT S/D INR PNL UPR ENGY	7–E7,40
97–02	Y	10263411	LH	13.90	DEFLECTOR, FRT S/D WAT	7–E2,22
97–02	Y	10263412	RH	13.90	DEFLECTOR, FRT S/D WAT	7–E2,22
97–99	Y	14064578	2	3.33	SEAL, FRT S/D UPR (09.665)	

10.450 BOLT – HINGE, Door Hinge

97	Y	10169764	8	3.40	BOLT, FRT S/D HGE (DR SI) (M8X1.25X32.82MM) (10.463)	
97	Y	11516595	8	*3.43	BOLT, FRT S/D HGE (DR SI) (08.900)	
97–02	Y	16632809	LH	15.35	HINGE, FRT S/D UPR (MODIFIED '95 GM10 HGE)	5–H7,5
97–02	Y	16632810	RH	15.35	HINGE, FRT S/D UPR (MODIFIED '95 GM10 HGE)	5–H7,5

10.454 HINGE, Front Door Lower Hinge

97–02	Y	16634677	LH	34.75	HINGE, FRT S/D LWR	5–H7,10
97–02	Y	16634678	RH	34.75	HINGE, FRT S/D LWR	5–H7,10

10.455 PIN – RIVET – ROLLER – SPRING – STOP, Front Door Hinge

97–02	Y	20262500	2	*.86	PIN, FRT S/D CHK LINK	5–H7,12
97–02	Y	9720330	2	3.33	RIVET, FRT S/D CHK LINK	

cardiagn.com

10.455 PIN – RIVET – ROLLER – SPRING – STOP, Front Door Hinge (Con't)

97–02	Y	20058035	2	3.20	ROLLER, FRT S/D CHK LINK (W/BUSH, LUB & ROLLER) (MAY REQUIRE LUBE P/N 1050109 TO EASE INSTALLATION)	5–H7,11
97–02	Y	20361482	2	3.33	SPRING, FRT S/D LWR HGE	5–H7,13
97–02	Y	10289774	2	1.15	STOP, FRT S/D UPR	5–H7,9

10.463 BOLT, Door Hinge

97	Y	10169716	8	3.40	BOLT, FRT S/D HGE (BODY SI) (M8X1.25X35.2MM IND H)	
97	Y	11516595	8	*3.43	BOLT, FRT S/D HGE (BODY SI) (08.900)	

10.470 COVER – LOCK, Front Side Door

97–02	Y	10275522	2	11.65	COVER, FRT S/D LK	5–H7,28
97–99	Y	16636582	RH	98.25	LOCK, FRT S/D (INCLS THEFT DET SWITCH & ACTUATOR)	5–H7,22
97–02	Y	16640975	LH	86.25	LOCK, FRT S/D	5–H7,22
00–02	Y (EXC CYL PASS DR (BCC) (EXPORT)	16639572	RH	77.00	LOCK, FRT S/D	5–H12,22
	*EXPORT**********EXPORT**********EXPORT**********EXPORT**********EXPORT*					
00–02	Y CYL PASS DR (BCC) (EXPORT)	16636582	RH	98.25	LOCK, FRT S/D (INCLS THEFT DET SWITCH & ACTUATOR)	5–H7,22

10.485 BATTERY – BOLT – BRACKET – BULB – CONNECTOR – MODULE – NUT – RECEIVER – SHIELD – TRANSMITTER, Door Electric and Vacuum Locks

97	Y07 (EXC EUROPEAN PROVISIONS (VD1) (EXPORT), VE1 (EXPORT)	12493150	1	3.45	BATTERY, R/CON DR LK XMTR (CR2450)	5–H20,11
98	Y07–67 (EXC EUROPEAN PROVISIONS (VD1) (EXPORT), VE1 (EXPORT)	12493150	1	3.45	BATTERY, R/CON DR LK XMTR (CR2450)	5–H20,11
99–01	Y (EXC EUROPEAN PROVISIONS (VD1) (EXPORT)	12493150	1	3.45	BATTERY, R/CON DR LK XMTR (CR2450)	5–H20,11
01–02	YY (EXC EUROPEAN PROVISIONS (VD1) (EXPORT), VE1 (EXPORT)	12538938	1	4.25	BATTERY, R/CON DR LK XMTR (LITHIUM) (TRADE CR2032) (SEE PART # 12495816 FOR BATTERY PKG)	5–H20,11
02	YY37	12538938	1	4.25	BATTERY, R/CON DR LK XMTR (LITHIUM) (TRADE CR2032) (SEE PART # 12495816 FOR BATTERY PKG)	5–H20,11
99	Y37	10281420	4	3.33	BOLT, DR LK & SI WDO RLY (10.268)	5–E5,9
97–02	Y	10281420	4	3.33	BOLT, FRT S/D CONT MDL (10.268)	5–E5,9
97–02	Y	10282800	1	4.35	BRACKET, R/CON DR LK RCVR	5–H20,2
97–02	Y	16057072	1	3.48	BULB, DR LK SW (W/O BOOT) (09.276) (AC–DELCO #16057072)	5–E5,10
97–02	Y	12089527	2	2.35	CONNECTOR, MDL–FRT S/D CONT (GREEN) (6–WAY F) (16.263)	7–F2,1
97–02	Y	12160773	4	.74	CONNECTOR, MDL–FRT S/D CONT (26–WAY F) (W/O LEADS)	7–F2,1

cardiagn.com

10.485 BATTERY – BOLT – BRACKET – BULB – CONNECTOR – MODULE – NUT – RECEIVER – SHIELD – TRANSMITTER, Door Electric and Vacuum Locks (Con't)

97–02	Y	15305888	2	30.36	CONNECTOR, MDL–FRT S/D CONT (6–WAY F W/LEADS) (13.090) (AC–DELCO #PT1032)	7–F2,1
01–02	Y 6–SPD M/TRANS (MM6), 4–SPD A/TRANS (M30)	12116247	1	20.05	CONNECTOR, MOT–DR LK ACTR (BLACK) (2–WAY M) (W/LEADS) (13.090) (AC–DELCO #PT288)	1–J12,513
01–02	Y 5.7S (LS6), MANUAL 6 SPD O/D TRANS, TREMEC (M12)	12116247	1	20.05	CONNECTOR, MOT–DR LK ACTR (BLACK) (2–WAY M) (W/LEADS) (13.090) (AC–DELCO #PT288)	1–J12,513
97–02	Y	12101856	2	18.83	CONNECTOR, SW–DR LK (GREEN) (2–WAY F, W/LEADS) (02.535) (AC–DELCO #PT248)	5–H7,8
99	Y	9381399	1	331.59	MODULE, BODY CONT (02.560) (AC–DELCO #9381399)	2–F15,30
00	Y	10304930	1	331.59	MODULE, BODY CONT (02.560) (AC–DELCO #10304930)	2–F15,30
01–02	Y	10304931	1	331.59	MODULE, BODY CONT (02.560) (AC–DELCO #10304931)	2–F15,30
97–99	Y	9352881	LH	218.00	MODULE, FRT S/D CONT (DRVR) (S/D LOCAL INTERFACE)	5–E5,8
97–99	Y	9352891	RH	218.00	MODULE, FRT S/D CONT (PASS) (S/D LOCAL INTERFACE)	5–E5,8
00–02	Y	9389689	LH	218.00	MODULE, FRT S/D CONT (DRVR) (S/D LOCAL INTERFACE)	5–E5,8
00–02	Y	10435192	RH	218.00	MODULE, FRT S/D CONT (PASS) (S/D LOCAL INTERFACE)	5–E5,8
97–02	Y	10295386	4	3.45	NUT, FRT S/D CONT MDL (M5 X .80) (SPECIAL AK SERIES) (14.683)	4–K2,26
97–00	Y (EXC EUROPEAN PROVISIONS (VD1) (EXPORT), VE1 (EXPORT)	10422621	1	263.00	RECEIVER, R/CON DR LK (10.526)	5–H20,3
01–02	YY37	10312535	1	93.25	RECEIVER, R/CON DR LK	5–H24,3
01–02	YY37	10431034	1	93.25	RECEIVER, R/CON DR LK (BLACK)	5–H24,3
01–02	Y07–67 (EXC EUROPEAN PROVISIONS (VD1) (EXPORT)	10431034	1	93.25	RECEIVER, R/CON DR LK (BLACK)	5–H24,3
97–98	Y	15303405	1	12.15	SHIELD, R/CON DR LK RCVR	5–H20,1
99–00	Y (EXC EUROPEAN PROVISIONS (VD1) (EXPORT)	15303405	1	12.15	SHIELD, R/CON DR LK RCVR	5–H20,1
97–99	Y (EXC EUROPEAN PROVISIONS (VD1) (EXPORT), VE1 (EXPORT)	10253839	2	102.00	TRANSMITTER, R/CON DR LK	5–H20,9
00	Y (EXC EUROPEAN PROVISIONS (VD1) (EXPORT)	10432147	2	102.00	TRANSMITTER, R/CON DR LK	5–H22,7
01–02	YY07–67 (EXC EUROPEAN PROVISIONS (VD1) (EXPORT), VE1 (EXPORT)	25695954	1	34.50	TRANSMITTER, R/CON DR LK (FOB #1) (RKE RECIEVER LOCATED UNDER RR SHELF)	5–H24,7
01–02	YY07–67 (EXC EUROPEAN PROVISIONS (VD1) (EXPORT), VE1 (EXPORT)	25695955	1	34.50	TRANSMITTER, R/CON DR LK (FOB #2, RKE RECIEVER LOCATED UNDER RR SHELF)	5–H24,7
01–02	YY37	25695954	1	34.50	TRANSMITTER, R/CON DR LK (FOB #1) (RKE RECIEVER LOCATED UNDER RR SHELF)	5–H24,7

cardiagn.com

10.485 BATTERY – BOLT – BRACKET – BULB – CONNECTOR – MODULE – NUT – RECEIVER – SHIELD – TRANSMITTER, Door Electric and Vacuum Locks (Con't)

01–02	YY37	25695955	1	34.50	TRANSMITTER, R/CON DR LK (FOB #2, RKE RECIEVER LOCATED UNDER RR SHELF) .	5–H24,7
	*EXPORT**********EXPORT**********EXPORT**********EXPORT**********EXPORT*					
97–98	Y07–67 EUROPEAN PROVISIONS (VD1) (EXPORT)	12538938	1	4.25	BATTERY, R/CON DR LK XMTR (LITHIUM) (TRADE CR2032) (SEE PART # 12495816 FOR BATTERY PKG)	5–H20,11
00–01	Y07–67 EUROPEAN PROVISIONS (VD1) (EXPORT)	12538938	1	4.25	BATTERY, R/CON DR LK XMTR (LITHIUM) (TRADE CR2032) (SEE PART # 12495816 FOR BATTERY PKG)	5–H20,11
02	Y07–67 EUROPEAN PROVISIONS (VD1) (EXPORT)	12538938	1	4.25	BATTERY, R/CON DR LK XMTR (LITHIUM) (TRADE CR2032) (SEE PART # 12495816 FOR BATTERY PKG)	5–H20,11
97	Y EUROPEAN PROVISIONS (VD1) (EXPORT)	10426004	1	263.00	RECEIVER, R/CON DR LK	5–H20,3
98–02	Y EUROPEAN PROVISIONS (VD1) (EXPORT)	10426004	1	263.00	RECEIVER, R/CON DR LK	5–H20,3
98–02	Y07–67 EUROPEAN PROVISIONS (VD1) (EXPORT)	10407640	2	102.00	TRANSMITTER, R/CON DR LK ..	5–H20,9

10.512 BOLT – CLIP – HANDLE – NUT, Door Lock Inside Handle

97–02	Y	10281420	2	3.33	BOLT, FRT S/D I/S HDL (10.268) .	5–H7,15
00–02	Y (EXC CYL PASS DR (BCC) (EXPORT)	16627215	2	3.33	CLIP, FRT S/D I/S HDL (NATURAL) .	
97–02	Y	10406533	LH	31.50	HANDLE, FRT S/D I/S	5–H7,14
97–02	Y	10406534	RH	31.50	HANDLE, FRT S/D I/S	5–H7,14
97–02	Y	10295386	2	3.45	NUT, FRT S/D I/S HDL (M5 X .80) (SPECIAL AK SERIES) (14.683)	

10.515 BEZEL – CLIP, Door Lock Inside Handle Escutcheon (Trim Protector)

97–02	Y	10406531	LH	6.10	BEZEL, FRT S/D I/S HDL	7–E2,26
97–02	Y	10406532	RH	6.10	BEZEL, FRT S/D I/S HDL	7–E2,26
97–99	Y	16633853	2	*.52	CLIP, FRT S/D I/S HDL ROD (PART OF LOCK ASM) (YELLOW) (10.527)	5–H7,23
97–99	Y	16633853	2	*.52	CLIP, FRT S/D I/S HDL ROD (AT I/S HANDLE) (YELLOW) (10.527) ..	5–H7,23
00	Y (1ST DES)	16633853	2	*.52	CLIP, FRT S/D I/S HDL ROD (PART OF LOCK ASM) (YELLOW) (10.527) (USED W/ROD WITH (1) 90 DEGREE BENDS) (2ND DES SEE 16640343)	5–H7,23
00	Y (1ST DES)	16633853	2	*.52	CLIP, FRT S/D I/S HDL ROD (YELLOW) (10.527) (USED W/ROD WITH (1) 90 DEGREE BENDS) (2ND DES SEE 16640343)	5–H7,23
00	Y (2ND DES)	16640343	2	3.33	CLIP, FRT S/D I/S HDL ROD (PART OF LOCK ASM) (YELLOW) (10.527) (USED W/ROD WITH (2) 90 DEGREE BENDS) (1ST DES SEE 16633853)	5–H12,18

cardiagn.com

10.515 BEZEL – CLIP, Door Lock Inside Handle Escutcheon (Trim Protector) (Con't)

00	Y (2ND DES)	16640343	2	3.33	CLIP, FRT S/D I/S HDL ROD (YELLOW) (10.527) (USED W/ROD WITH (2) 90 DEGREE BENDS) (1ST DES SEE 16633853)	5–H12,18
01	Y	16633853	2	*.52	CLIP, FRT S/D I/S HDL ROD (AT I/S HANDLE) (YELLOW) (10.527) ..	5–H7,23
01–02	Y	16633853	2	*.52	CLIP, FRT S/D I/S HDL ROD (PART OF LOCK ASM) (YELLOW) (10.527)	5–H7,23

10.526 CONNECTOR, Door Lock (Keyless Entry)

97–02	Y	12126438	1	41.31	CONNECTOR, MDL–KEYLESS ENTRY CONT (BLACK) (8–WAY F) (W/LEADS) (02.485) (AC–DELCO #PT709)	5–H20,5
01–02	Y	12102635	1	24.85	CONNECTOR, MDL–KEYLESS ENTRY CONT (BLUE) (20 PIN, 4 WAY, W/LEADS) (02.188) (AC–DELCO #PT322)	5–H24,5

10.527 BUMPER – CLIP – HANDLE, Door Outside Handle

97–02	Y	12530199	2	5.40	BUMPER, FRT S/D O/S HDL	5–H7,40
01–02	Y	16627215	AR	3.33	CLIP, FRT S/D O/S HDL (NATURAL) (10.512)	
97–99	Y (10U)	10271319	RH	41.25	HANDLE, FRT S/D O/S (WHITE) .	5–H7,39
97–00	Y (10U)	10271320	LH	40.50	HANDLE, FRT S/D O/S (WHITE) .	5–H7,39
97–99	Y (13U)	10271321	RH	41.25	HANDLE, FRT S/D O/S (SILVER) .	5–H7,39
97–99	Y (70U)	10271329	RH	41.25	HANDLE, FRT S/D O/S (RED) ...	5–H7,39
97–02	Y	10439373	LH	41.25	HANDLE, FRT S/D O/S (PAINT TO MATCH)	5–H7,39
97–99	Y	10439374	RH	41.25	HANDLE, FRT S/D O/S (PAINT TO MATCH)	5–H7,39
97–99	Y (41U)	10439560	RH	41.25	HANDLE, FRT S/D O/S (BLACK) .	5–H7,39
98–01	Y (11U)	10282425	LH	41.25	HANDLE, FRT S/D O/S (PEWTER) .	5–H12,39
00–02	Y (EXC CYL PASS DR (BCC) (EXPORT)	10439381	RH	41.25	HANDLE, FRT S/D O/S (PAINT TO MATCH)	5–H12,39
00–02	Y (41U), (EXC CYL PASS DR (BCC) (EXPORT)	10439576	RH	41.25	HANDLE, FRT S/D O/S (BLACK) .	5–H12,39
00–02	Y (70U), (EXC CYL PASS DR (BCC) (EXPORT)	10439577	RH	41.25	HANDLE, FRT S/D O/S (RED) ...	5–H12,39
00	Y07–67 (79U)	10410626	LH	41.25	HANDLE, FRT S/D O/S (YELLOW)	5–H12,39
01	Y (79U)	10410626	LH	41.25	HANDLE, FRT S/D O/S (YELLOW)	5–H12,39
	*EXPORT**********EXPORT**********EXPORT**********EXPORT**********EXPORT*					
00	Y CYL PASS DR (BCC) (EXPORT), (10U)	10271319	RH	41.25	HANDLE, FRT S/D O/S (WHITE) .	5–H7,39
00	Y CYL PASS DR (BCC) (EXPORT), (13U)	10271321	RH	41.25	HANDLE, FRT S/D O/S (SILVER) .	5–H7,39
00–02	Y CYL PASS DR (BCC) (EXPORT)	10439374	RH	41.25	HANDLE, FRT S/D O/S (PAINT TO MATCH)	5–H7,39
00–01	Y07–67 CYL PASS DR (BCC) (EXPORT), (70U)	10271329	RH	41.25	HANDLE, FRT S/D O/S (RED) ...	5–H7,39
00–02	Y07–67 CYL PASS DR (BCC) (EXPORT), (41U)	10439560	RH	41.25	HANDLE, FRT S/D O/S (BLACK) .	5–H7,39

10.537 GASKET, Door Outside Handle

97–02	Y	12531201	RH	6.90	GASKET, FRT S/D O/S HDL	5–H7,53
97–02	Y	12531227	LH	5.65	GASKET, FRT S/D O/S HDL	5–H7,53

cardiagn.com

10.550 CYLINDER – GASKET, Door Outside Lock

97–02	Y	12457616	1	18.55	CYLINDER, FRT S/D LK	5–H7,38
97–02	Y	22600784	2	*.52	GASKET, FRT S/D LK CYL	5–H7,36

10.551 LEVER – PAWL – RETAINER, Door Outside Lock Cylinder

97–02	Y	16608990	1	1.00	LEVER, FRT S/D LK CYL	5–H7,49
97–98	Y	16608980	1	1.00	PAWL, FRT S/D LK	5–H7,49
97–02	Y	12531200	2	.34	RETAINER, FRT S/D LK CYL	5–H7,35
97–02	Y	16600277	1	.59	RETAINER, FRT S/D LK PAWL (SPR CLIP) (10.550)	5–H7,50

10.552 CAP – SPRING, Door Outside Lock Cylinder

97–02	Y	12327911	1	3.40	CAP, FRT S/D LK CYL (BRIGHT)	5–H7,44
97–02	Y	12503691	2	3.33	SPRING, FRT S/D LK CYL SHUTTER	5–H7,46

10.553 SPRING – TUMBLER, Door Lock Cylinder

97–02	Y	21035207	7	*.51	SPRING, FRT S/D LK CYL TUMB (10.236)	5–H7,47
97–02	Y	12522873	AR	*.51	TUMBLER, FRT S/D LK CYL (#1)	
97–02	Y	12522874	AR	*.51	TUMBLER, FRT S/D LK CYL (#2)	5–H7,48
97–02	Y	12522875	AR	*.51	TUMBLER, FRT S/D LK CYL (#3)	5–H7,48
97–02	Y	12522876	AR	*.51	TUMBLER, FRT S/D LK CYL (#4)	5–H7,48

10.563 ROD, Door Inside Locking

97–02	Y	10233181	LH	5.50	ROD, FRT S/D I/S HDL	5–H7,19
97–02	Y	10233182	RH	5.50	ROD, FRT S/D I/S HDL	5–H7,19
97–02	Y	10233179	LH	.79	ROD, FRT S/D LK CYL	5–H7,24
97–99	Y	10233180	RH	.79	ROD, FRT S/D LK CYL	5–H7,24
97–02	Y	10233183	LH	5.50	ROD, FRT S/D LKG	5–H7,17
97–02	Y	10233184	RH	5.50	ROD, FRT S/D LKG	5–H7,17
97–02	Y	10233177	2	4.50	ROD, FRT S/D O/S HDL	5–H7,34
	*EXPORT*********EXPORT*********EXPORT*********EXPORT*********EXPORT*					
00–02	Y CYL PASS DR (BCC) (EXPORT)	10233180	RH	.79	ROD, FRT S/D LK CYL	5–H7,24

10.565 CLIP – RETAINER, Door Inside Locking Rod

97–02	Y	10132220	2	3.40	CLIP, FRT S/D LKG ROD (FOAM)	5–H7,42
97–99	Y	16633853	2	*.52	CLIP, FRT S/D LKG ROD (PART OF LOCK ASM) (YELLOW) (10.527)	5–H7,25
00	Y (1ST DES)	16633853	2	*.52	CLIP, FRT S/D LKG ROD (PART OF LOCK ASM) (YELLOW) (10.527) (USED W/ROD WITH (1) 90 DEGREE BENDS) (2ND DES SEE 16640343)	5–H7,25
00	Y (2ND DES)	16640343	2	3.33	CLIP, FRT S/D LKG ROD (PART OF LOCK ASM) (YELLOW) (10.527) (USED W/ROD WITH (2) 90 DEGREE BENDS) (1ST DES SEE 16633853)	5–H12,25
97–02	Y	16627215	2	3.33	CLIP, FRT S/D O/S HDL ROD (PART OF O/S HANDLE) (NATURAL) (10.512)	5–H7,37
97–02	Y	16675980	2	*.51	CLIP, FRT S/D O/S HDL ROD (PART OF LOCK ASM) (BLACK) (16.353)	5–H7,33

cardiagn.com

10.565 CLIP – RETAINER, Door Inside Locking Rod (Con't)

97–99	Y	16633853	2	*.52	RETAINER, FRT S/D LK CYL ROD (AT LK CYLINDER) (YELLOW) (10.527)	5–H7,25
00	Y (1ST DES)	16633853	2	*.52	RETAINER, FRT S/D LK CYL ROD (YELLOW) (10.527) (USED W/ROD WITH (1) 90 DEGREE BENDS) (2ND DES SEE 16640343)	5–H7,25
00	Y (2ND DES)	16640343	2	3.33	RETAINER, FRT S/D LK CYL ROD (AT LK CYLINDER) (YELLOW) (10.527) (USED W/ROD WITH (2) 90 DEGREE BENDS) (1ST DES SEE 16633853)	5–H12,25
01–02	Y	16633853	2	*.52	RETAINER, FRT S/D LK CYL ROD (AT LK CYLINDER) (YELLOW) (10.527)	5–H7,25

10.569 STRIKER, Door Lock Striker

97–02	Y	21090040	2	12.25	STRIKER, FRT S/D LK (BLACK) (INCLS PLATE, REINFORCEMENT & STRIKER)	5–H7,29

10.570 BOLT, Door Lock Striker

97–02	Y	9442471	4	*1.03	BOLT, FRT S/D LK STKR (M8X1.25X35) (08.908)	5–H7,32

10.571 BOLT – SPACER – WASHER, Door Lock Striker

97–02	Y	16606574	6	*.51	BOLT, RR S/D LAT STKR (M2.3X1.34X9) (TORX HD) (10.474)	
97–01	Y	15012626	6	3.33	SPACER, FRT S/D LK STKR (1 MM THK) (REPLS SPACER 2 MM THK) (16.335) (ID #4372)	5–H7,30
97–99	Y	16634372	6	3.33	SPACER, FRT S/D LK STKR (ID #4372)	5–H7,30
00–02	Y	16634372	8	3.33	SPACER, FRT S/D LK STKR (ID #4372)	5–H7,30
97–02	Y	22597807	2	*1.03	WASHER, FRT S/D LK STKR	5–H7,31

10.587 BUMPER – BUMPER KIT – PLUG, Door

97	Y	25664043	2	4.76	BUMPER KIT, FRT S/D (REPAIR, INCLS BUMPER & CLIP)	
97–02	Y	20376243	2	*1.03	BUMPER, FRT S/D	5–H7,41
97–02	Y	10283990	4	3.40	PLUG, FRT S/D INR PNL HOLE (FITS 54.1MM HOLE) (RECTANGULAR)	7–E2,6
97–02	Y	10288134	2	3.40	PLUG, FRT S/D INR PNL HOLE (FITS 23.1MM HOLE) (ROUND)	5–H7,52

10.681 WINDOW, Front Door Window

97–02	Y	10403189	LH	189.80	WINDOW, FRT S/D	5–D10,7
97–02	Y	10403190	RH	189.80	WINDOW, FRT S/D	5–D10,7

cardiagn.com

10.685 FILLER, Front Door Window

97–00	Y	10260109	LH	25.25	FILLER, FRT S/D WDO BELT FRT (W/PUSH PIN)	6–D5,5
97–00	Y	10260110	RH	25.25	FILLER, FRT S/D WDO BELT FRT (W/PUSH PIN)	6–D5,5
01–02	Y	10310079	LH	25.25	FILLER, FRT S/D WDO BELT FRT (W/O PUSH PIN)	6–D5,5
01–02	Y	10310080	RH	25.25	FILLER, FRT S/D WDO BELT FRT (W/O PUSH PIN)	6–D5,5

10.694 RETAINER – WEATHERSTRIP, Door Weatherstrip

97–98	Y	20540336	8	3.45	RETAINER, FRT S/D W/STR (PAINT TO MATCH) (FITS .18 HOLE, .7 LG, .43 OD, NYLON) (14.630)	5–D10,10
99–02	Y	20538173	6	3.45	RETAINER, FRT S/D W/STR (BLACK) (4.8 HOLE) (14.685)	5–D14,12
99–02	Y	20540336	2	3.45	RETAINER, FRT S/D W/STR (PAINT TO MATCH) (FITS .18 HOLE, .7 LG, .43 OD, NYLON) (14.630)	5–D10,10
99–02	Y37	10297742	LH	32.75	RETAINER, FRT S/D W/STR FRT UPR (METAL STRIP RETAINS FRT UPR W/STR) (10.695)	5–D22,3
99–02	Y37	10297743	RH	32.75	RETAINER, FRT S/D W/STR FRT UPR (METAL STRIP RETAINS FRT UPR W/STR) (10.695)	5–D22,3
99–02	Y37	10419267	RH	13.60	RETAINER, FRT S/D W/STR UPR RR (METAL STRIP RETAINS RR UPR W/STR) (10.695)	5–D22,7
99–02	Y37	10419268	LH	13.60	RETAINER, FRT S/D W/STR UPR RR (METAL STRIP RETAINS RR UPR W/STR) (10.695)	5–D22,7
97–02	Y	10302723	LH	77.00	WEATHERSTRIP, FRT S/D (EPDM COMBINATION)	5–D10,11
97–02	Y	10302724	RH	77.00	WEATHERSTRIP, FRT S/D (EPDM COMBINATION)	5–D10,11

10.695 BOLT – RETAINER, Door Opening

97–98	Y	16751144	4	*.08	BOLT, FRT S/D OPG FIN PNL (LWR FIN PNL) (08.977)	
98–02	Y67	10252855	LH	15.65	RETAINER, FRT S/D WDO UPR RR W/STR (14.120)	5–D14,16
98–02	Y67	10252856	RH	15.65	RETAINER, FRT S/D WDO UPR RR W/STR (14.120)	5–D14,16

10.703 CLIP, Front Door Window Glass Run Channel

97–01	Y07 DUAL REMOVEABLE ROOF (C2L)	10408012	4	20.95	CLIP, FRT S/D WDO W/STR RET (RF PNL RET ALUM)	5–D10,27
97–01	Y07 CLEAR ROOF PANEL (CC3), REMOVABLE SUNROOF (CF7)	10408012	2	20.95	CLIP, FRT S/D WDO W/STR RET	5–D10,27
98–01	Y67	10408012	2	20.95	CLIP, FRT S/D WDO W/STR RET (RF PNL RET ALUM)	5–D10,27
99–01	Y37	10408012	2	20.95	CLIP, FRT S/D WDO W/STR RET (RF PNL RET ALUM)	5–D10,27
02	Y07 DUAL REMOVEABLE ROOF (C2L)	10408012	4	20.95	CLIP, FRT S/D WDO W/STR RET (RF PNL RET ALUM)	5–D10,27
02	Y07 CLEAR ROOF PANEL (CC3), REMOVABLE SUNROOF (CF7)	10408012	2	20.95	CLIP, FRT S/D WDO W/STR RET	5–D10,27

cardiagn.com

10.703 CLIP, Front Door Window Glass Run Channel(Con't)

02	Y37	10408012	2	20.95	CLIP, FRT S/D WDO W/STR RET (RF PNL RET ALUM)	5–D10,27
02	Y67	10408012	2	20.95	CLIP, FRT S/D WDO W/STR RET (RF PNL RET ALUM)	5–D10,27

10.710 BOLT – RETAINER – SEALING STRIP – WEATHERSTRIP, Front Door Window Glass Channel (Outer & Inner)

98	Y67	10180421	2	*.74	BOLT, FRT S/D WDO RR W/STR RET (M4.2X1.41X16) (SCREW–ROUND HD) (08.977)	
97–02	Y07	10252847	LH	30.50	RETAINER, FRT S/D WDO FRT W/STR	5–D10,13
97–02	Y07	10252848	RH	30.50	RETAINER, FRT S/D WDO FRT W/STR	5–D10,13
98–02	Y67	10252847	LH	30.50	RETAINER, FRT S/D WDO FRT W/STR	5–D10,13
98–02	Y67	10252848	RH	30.50	RETAINER, FRT S/D WDO FRT W/STR	5–D10,13
97–01	Y07	10299393	LH	20.10	RETAINER, FRT S/D WDO RR W/STR	5–D10,23
97–02	Y07	10299394	RH	20.10	RETAINER, FRT S/D WDO RR W/STR	5–D10,23
98–99	Y67	10252858	RH	11.00	RETAINER, FRT S/D WDO RR W/STR	5–D14,23
98–99	Y67	10445410	LH	13.20	RETAINER, FRT S/D WDO RR W/STR	5–D14,23
98–99	Y67	10445411	LH	13.20	RETAINER, FRT S/D WDO RR W/STR (USE TOGETHER W/ P/N 10445410)	5–D14,23
98	Y67	20540336	2	3.45	RETAINER, FRT S/D WDO RR W/STR (PUSH IN) (UPR) (PAINT TO MATCH) (FITS .18 HOLE, .7 LG, .43 OD, NYLON) (14.630)	5–D14,24
99–02	Y67	20514862	2	*.52	RETAINER, FRT S/D WDO RR W/STR (PUSH IN) (12.804)	5–D14,24
00	Y67 (1ST DES)	10252858	RH	11.00	RETAINER, FRT S/D WDO RR W/STR (USED ON VEHICLES WHERE FRONT END OF RETAINER IS SEALED TO REST OF RETAINER)	5–D14,23
00	Y67 (2ND DES)	10445410	LH	13.20	RETAINER, FRT S/D WDO RR W/STR (ONE PIECE CURVED)	5–D14,23
00	Y67 (1ST DES)	10445410	LH	13.20	RETAINER, FRT S/D WDO RR W/STR	5–D14,23
00	Y67 (2ND DES)	10445411	LH	13.20	RETAINER, FRT S/D WDO RR W/STR (FLAT END ONE PIECE) (USED ON VEHICLES W/FRONT END OF RETAINER AS A SEPARATE PART THAT ATTACHES TO THE REST OF THE RETAINER W/BOLT/SCREWS)	5–D14,23
00	Y67 (1ST DES)	10445411	LH	13.20	RETAINER, FRT S/D WDO RR W/STR (USE TOGETHER W/ P/N 10445410)	5–D14,23
00	Y67 (2ND DES)	10445412	RH	13.20	RETAINER, FRT S/D WDO RR W/STR (ONE PIECE CURVED)	5–D14,23

cardiagn.com

10.710 BOLT – RETAINER – SEALING STRIP – WEATHERSTRIP, Front Door Window Glass Channel (Outer & Inner) (Con't)

00	Y67 (2ND DES)	10445413	RH	13.20	RETAINER, FRT S/D WDO RR W/STR (FLAT END ONE PIECE) (USED ON VEHICLES W/FRONT END OF RETAINER AS A SEPARATE PART THAT ATTACHES TO THE REST OF THE RETAINER W/BOLT/SCREWS)	5–D14,23
01–02	Y67	10445410	LH	13.20	RETAINER, FRT S/D WDO RR W/STR	5–D14,23
01–02	Y67	10445411	LH	13.20	RETAINER, FRT S/D WDO RR W/STR (FLAT END ONE PIECE)	5–D14,23
01–02	Y67	10445412	RH	13.20	RETAINER, FRT S/D WDO RR W/STR	5–D14,23
01–02	Y67	10445413	RH	13.20	RETAINER, FRT S/D WDO RR W/STR (FLAT END ONE PIECE)	5–D14,23
02	Y07	10299393	LH	20.10	RETAINER, FRT S/D WDO RR W/STR	5–D10,23
98–00	Y67	10252854	RH	15.05	RETAINER, FRT S/D WDO UPR FRT W/STR	5–D14,14
98–00	Y67	10308189	LH	15.05	RETAINER, FRT S/D WDO UPR FRT W/STR	5–D14,14
99–02	Y37	20538173	2	3.45	RETAINER, FRT S/D WDO UPR FRT W/STR (PUSH IN) (BLACK) (4.8 HOLE) (14.685)	5–D22,10
99–02	Y37	20540336	6	3.45	RETAINER, FRT S/D WDO UPR FRT W/STR (PUSH IN) (PAINT TO MATCH) (FITS .18 HOLE, .7 LG, .43 OD, NYLON) (14.630)	5–D14,24
01–02	Y67	10308189	LH	15.05	RETAINER, FRT S/D WDO UPR FRT W/STR	5–D14,14
01–02	Y67	10308190	RH	15.05	RETAINER, FRT S/D WDO UPR FRT W/STR	5–D14,14
97–02	Y07 DUAL REMOVEABLE ROOF (C2L)	10252849	LH	22.25	RETAINER, FRT S/D WDO UPR W/STR (RF PNL RET ALUM)	5–D10,29
97–02	YC7 CLEAR ROOF PANEL (CC3), REMOVABLE SUNROOF (CF7)	10252849	LH	22.25	RETAINER, FRT S/D WDO UPR W/STR (RF PNL RET ALUM)	5–D10,29
97–02	Y07 DUAL REMOVEABLE ROOF (C2L)	10252850	RH	22.25	RETAINER, FRT S/D WDO UPR W/STR (RF PNL RET ALUM) (NON ENCAPSULATED)	5–D10,29
97–02	Y07 CLEAR ROOF PANEL (CC3), REMOVABLE SUNROOF (CF7)	10252850	RH	22.25	RETAINER, FRT S/D WDO UPR W/STR (RF PNL RET ALUM) (NON ENCAPSULATED)	5–D10,29
97	Y07	10252880	RH	20.80	SEALING STRIP, FRT S/D WDO OTR	5–D10,8
98–00	Y07	10447039	LH	23.05	SEALING STRIP, FRT S/D WDO OTR	5–D10,8
98–00	Y07	10447040	RH	23.05	SEALING STRIP, FRT S/D WDO OTR	5–D10,8
98–00	Y67	10409129	LH	23.05	SEALING STRIP, FRT S/D WDO OTR	5–D14,10
98–01	Y67	10409130	RH	23.05	SEALING STRIP, FRT S/D WDO OTR	5–D14,10
98–00	Y67	10447043	RH	23.05	SEALING STRIP, FRT S/D WDO OTR	5–D14,10
99–00	Y37	10431426	LH	23.05	SEALING STRIP, FRT S/D WDO OTR	5–D22,20

cardiagn.com

10.710 BOLT – RETAINER – SEALING STRIP – WEATHERSTRIP, Front Door Window Glass Channel (Outer & Inner) (Con't)

99–00	Y37	10447046	RH	22.75	SEALING STRIP, FRT S/D WDO OTR	5–D22,20
01–02	Y07	10313420	RH	23.05	SEALING STRIP, FRT S/D WDO OTR	5–D25,8
01–02	Y07	10313421	LH	23.05	SEALING STRIP, FRT S/D WDO OTR	5–D25,8
01–02	Y37	10313426	RH	22.75	SEALING STRIP, FRT S/D WDO OTR	5–D22,20
01–02	Y37	10313427	LH	22.75	SEALING STRIP, FRT S/D WDO OTR	5–D22,20
01–02	Y67	10313423	LH	23.05	SEALING STRIP, FRT S/D WDO OTR	5–D14,10
01–02	Y67	10313424	RH	23.05	SEALING STRIP, FRT S/D WDO OTR	5–D14,10
98–02	Y67	10236329	LH	47.25	WEATHERSTRIP, FRT S/D WDO UPR RR	5–D14,21
98–02	Y67	10236330	RH	47.25	WEATHERSTRIP, FRT S/D WDO UPR RR	5–D14,21
98–02	Y67	10415919	LH	69.00	WEATHERSTRIP, FRT S/D WDO RR	5–D14,25
98–02	Y67	10415920	RH	69.00	WEATHERSTRIP, FRT S/D WDO RR	
97–00	Y07 DUAL REMOVEABLE ROOF (C2L)	10236315	LH	47.75	WEATHERSTRIP, FRT S/D WDO UPR	5–D10,25
97–00	Y07 CLEAR ROOF PANEL (CC3), REMOVABLE SUNROOF (CF7)	10236315	LH	47.75	WEATHERSTRIP, FRT S/D WDO UPR	5–D10,25
97–00	Y07 CLEAR ROOF PANEL (CC3), REMOVABLE SUNROOF (CF7)	10236316	RH	47.75	WEATHERSTRIP, FRT S/D WDO UPR	5–D10,25
97–00	Y07 DUAL REMOVEABLE ROOF (C2L)	10236316	RH	47.75	WEATHERSTRIP, FRT S/D WDO UPR	5–D10,25
01	Y07 DUAL REMOVEABLE ROOF (C2L)	10313370	LH	47.75	WEATHERSTRIP, FRT S/D WDO UPR	5–D25,25
01–02	Y07 CLEAR ROOF PANEL (CC3), REMOVABLE SUNROOF (CF7)	10313370	LH	47.75	WEATHERSTRIP, FRT S/D WDO UPR	5–D25,25
01–02	Y07 CLEAR ROOF PANEL (CC3), REMOVABLE SUNROOF (CF7)	10313371	RH	47.75	WEATHERSTRIP, FRT S/D WDO UPR	5–D25,25
01–02	Y07 DUAL REMOVEABLE ROOF (C2L)	10313371	RH	47.75	WEATHERSTRIP, FRT S/D WDO UPR	5–D25,25
02	Y07 DUAL REMOVEABLE ROOF (C2L)	10313370	LH	47.75	WEATHERSTRIP, FRT S/D WDO UPR	5–D25,25
98–02	Y67	10236327	LH	55.25	WEATHERSTRIP, FRT S/D WDO UPR FRT	5–D14,20
98–02	Y67	10236328	RH	55.25	WEATHERSTRIP, FRT S/D WDO UPR FRT	5–D14,20
99–02	Y37	10310680	RH	150.00	WEATHERSTRIP, FRT S/D WDO UPR FRT	5–D22,9
99–02	Y37	10415921	LH	150.00	WEATHERSTRIP, FRT S/D WDO UPR FRT	5–D22,9

10.777 BOLT – BULB – CONNECTOR – SWITCH, Door Window

99	Y37	10281420	4	3.33	BOLT, DR LK & SI WDO RLY (10.268)	
97–02	Y	12102778	1	46.41	CONNECTOR, SW–SI WDO & M/FUNC (BLACK) (7–WAY F, W/LEADS) (02.535) (AC–DELCO #PT406)	5–E5,10

© 2001 GENERAL MOTORS SERVICE PARTS OPERATIONS – CHEVROLET – 15Y

cardiagn.com

10.777 BOLT – BULB – CONNECTOR – SWITCH, Door Window (Con't)

97–02	Y	12135165	RH	54.50	SWITCH, SI WDO	5–E5,10
97	Y07 CONVENIENCE PKG (AAB)	12135166	LH	93.00	SWITCH, SI WDO (SNAP FIT ASM) (DRIVER) (W/POWER MIRRORS W/MEMORY W/DOOR LOCKS))	5–E5,10
97	Y07 (EXC CONVENIENCE PKG (AAB)	12135167	LH	73.00	SWITCH, SI WDO (SNAP FIT ASM) (DRIVER) (W/POWER MIRRORS W/MEMORY W/DOOR LOCKS)) (& MIRRORS & DR LK)	5–E5,10
98–00	Y07–67 CONVENIENCE PKG (AAB)	12135166	LH	93.00	SWITCH, SI WDO (SNAP FIT ASM) (DRIVER) (W/POWER MIRRORS W/MEMORY W/DOOR LOCKS))	5–E5,10
98	Y07–67 (EXC CONVENIENCE PKG (AAB)	12135167	LH	73.00	SWITCH, SI WDO (SNAP FIT ASM) (DRIVER) (W/POWER MIRRORS W/MEMORY W/DOOR LOCKS)) (& MIRRORS & DR LK)	5–E5,10
99–02	Y (EXC CONVENIENCE PKG (AAB)	12135167	LH	73.00	SWITCH, SI WDO (DRIVER) (W/POWER MIRRORS W/MEMORY W/DOOR LOCKS)) (& MIRRORS & DR LK)	5–E5,10
01–02	Y CONVENIENCE PKG (AAB)	12135166	LH	93.00	SWITCH, SI WDO (DRIVER (W/POWER MIRRORS W/MEMORY W/DOOR LOCKS))	5–E5,10
	*EXPORT****************EXPORT****************EXPORT****************EXPORT****************EXPORT*					
97–02	Y	16057072	2	3.48	BULB, SI WDO SW (W/O BOOT) (09.276) (AC–DELCO #16057072)	5–E5,10

10.783 CONNECTOR – REGULATOR, Front Door Window Regulator

NOTE: TAPE, FRT S/D WDO REG (20604413 90 FT ROLL 15MM WIDE) (REFER TO STANDARD PARTS CAT GP 8.961)

97–02	Y	15305982	1	20.91	CONNECTOR, MOT–WDO REG (AC–DELCO #PT1044)	5–H7,16
97–02	Y	10417573	RH	255.00	REGULATOR, FRT S/D WDO (W/MOTOR)	5–H7,16
97–02	Y	10446574	LH	255.00	REGULATOR, FRT S/D WDO	5–H7,16

cardiagn.com

11.120 RETAINER, Rear Hatch Window

99–02	Y37	15748479	4	*.62	RETAINER, R/WDO LWR G/MLDG (13.0MM WIDE) (YELLOW) (U–BASE) (16.575)	6–C6,16
00–02	Y37	332364	2	*.52	RETAINER, R/WDO LWR G/MLDG (08.154)	

11.175 CLIP – PLATE, Front Door Sill

99–02	Y	15748479	4	*.62	CLIP, FRT S/D SILL TR PLT (13.0MM WIDE) (YELLOW) (U–BASE) (16.575)	
97	Y (94I)	10272389	LH	35.25	PLATE, FRT S/D SILL TR (RED)	7–E2,42
97	Y (94I)	10272390	RH	35.25	PLATE, FRT S/D SILL TR (RED)	7–E2,42
97–02	Y (19I)	10430855	LH	30.50	PLATE, FRT S/D SILL TR (BLACK)	7–E2,42
97–02	Y (19I)	10430856	RH	30.50	PLATE, FRT S/D SILL TR (BLACK)	7–E2,42
97	Y (92I)	10430857	LH	30.50	PLATE, FRT S/D SILL TR (PEWTER)	7–E2,42
97	Y (92I)	10430858	RH	30.50	PLATE, FRT S/D SILL TR (PEWTER)	7–E2,42
98–02	Y	10420975	LH	20.00	PLATE, FRT S/D SILL TR (LOW GLOSS BLACK) (CORVETTE CROSSED FLAG LOGO)	7–E2,57
98–02	Y	10420976	RH	20.00	PLATE, FRT S/D SILL TR (LOW GLOSS BLACK) (CORVETTE CROSSED FLAG LOGO)	7–E2,57
98–99	Y07–67 (94I)	10272389	LH	35.25	PLATE, FRT S/D SILL TR (RED)	7–E2,42
98–99	Y07–67 (94I)	10272390	RH	35.25	PLATE, FRT S/D SILL TR (RED)	7–E2,42
98–02	Y07–67 (92I)	10430857	LH	30.50	PLATE, FRT S/D SILL TR (PEWTER)	7–E2,42
98–02	Y07–67 (92I)	10430858	RH	30.50	PLATE, FRT S/D SILL TR (PEWTER)	7–E2,42
98–02	Y07–67 (67I)	10430861	LH	30.50	PLATE, FRT S/D SILL TR (OAK)	7–E7,42
98–02	Y07–67 (67I)	10430862	RH	30.50	PLATE, FRT S/D SILL TR (OAK)	7–E7,42
00–02	Y07–67 (70I)	10430863	LH	30.50	PLATE, FRT S/D SILL TR (RED)	7–E7,42
00–02	Y07–67 (70I)	10430864	RH	30.50	PLATE, FRT S/D SILL TR (RED)	7–E7,42

11.204 WINDOW, Rear Window

99–02	Y37	10424406	1	1683.00	WINDOW, RR	5–D22,12

11.208 MOLDING, Rear Window Reveal Molding

99–00	Y37	10400804	1	24.80	MOLDING, R/WDO RVL	6–C6,1
01	Y37	88948473	1	43.75	MOLDING, R/WDO RVL	

11.358 CARPET, Front Seat Back

97–02	Y07 (19I)	10272042	1	78.75	CARPET, F/SEAT BK BODY PNL (BLACK)	7–I4,13
97–02	Y07 (92I)	10273214	1	78.75	CARPET, F/SEAT BK BODY PNL (PEWTER)	7–I4,13
97–99	Y07 (94I)	10273215	1	78.75	CARPET, F/SEAT BK BODY PNL (RED)	7–I4,13
98–02	Y07 (67I)	10285180	1	78.75	CARPET, F/SEAT BK BODY PNL (CAMEL)	7–I4,13
98–00	Y67 (19I)	10277793	1	78.75	CARPET, F/SEAT BK BODY PNL (BLACK)	7–I12,16
98–00	Y67 (92I)	10277794	1	78.75	CARPET, F/SEAT BK BODY PNL (PEWTER)	7–I12,16
98–99	Y67 (94I)	10277795	1	78.75	CARPET, F/SEAT BK BODY PNL (RED)	7–I12,16
98–00	Y67 (67I)	10285190	1	78.75	CARPET, F/SEAT BK BODY PNL (CAMEL)	7–I12,16
99	Y37 (19I)	10419553	1	78.75	CARPET, F/SEAT BK BODY PNL (BLACK)	7–I25,8

cardiagn.com

11.358 CARPET, Front Seat Back (Con't)

00–02	Y07 (70I)	10409427	1	78.75	CARPET, F/SEAT BK BODY PNL (RED)	7–I8,12
00–02	Y37 (19I)	10431952	1	78.75	CARPET, F/SEAT BK BODY PNL (BLACK)	7–I25,8
00	Y67 (70I)	10409428	1	78.75	CARPET, F/SEAT BK BODY PNL (RED)	7–I12,16
01–02	Y67 (19I)	10439078	1	78.75	CARPET, F/SEAT BK BODY PNL (BLACK)	7–I16,12
01–02	Y67 (92I)	10439079	1	78.75	CARPET, F/SEAT BK BODY PNL (PEWTER)	7–I16,12
01–02	Y67 (67I)	10439080	1	78.75	CARPET, F/SEAT BK BODY PNL (OAK)	7–I16,12
01–02	Y67 (70I)	10439081	1	78.75	CARPET, F/SEAT BK BODY PNL (RED)	7–I16,12

11.362 PANEL, Front Seat Cushion Side

97–98	Y	12455426	1	6.10	PANEL, D/SEAT CUSH OTR FIN (3 ATTACHING HOLES)	7–F2,7
99–02	Y07–67	12455426	1	6.10	PANEL, D/SEAT CUSH OTR FIN (3 ATTACHING HOLES)	7–F2,7
99–02	Y37 MAN RECL FRT BKT ST, DELUXE (AR9)	12455426	1	6.10	PANEL, D/SEAT CUSH OTR FIN (3 ATTACHING HOLES)	7–F2,7
97	Y	10273008	1	10.40	PANEL, P/SEAT CUSH OTR FIN (BLACK)	7–F2,7
98–02	Y07–67	12455427	1	6.10	PANEL, P/SEAT CUSH OTR FIN	7–F7,7

11.368 RETAINER, Front Seat Back Panel

97–02	Y	20511451	2	3.45	RETAINER, D/SEAT BK CUSH FRM SUPT (12.800)	7–F2,17

11.373 BOLT – FRAME – INSULATOR – PANEL, Front Seat Back

97–02	Y	10277966	1	8.75	BOLT, D/SEAT BK CUSH FRM	7–F2,28
97–02	Y	10277966	1	8.75	BOLT, P/SEAT BK CUSH FRM	7–F2,28
97	Y MAN RECL FRT BKT ST, DELUXE (AR9)	12455474	1	171.00	FRAME, D/SEAT BK CUSH	7–F2,21
97–98	Y RECL FRT BKT ST, LUXURY (AQ9), IL3	12455474	1	171.00	FRAME, D/SEAT BK CUSH (USE W/TRIM CODES ENDING IN 3, 4)	7–F2,21
98	Y MAN RECL FRT BKT ST, DELUXE (AR9)	12455474	1	171.00	FRAME, D/SEAT BK CUSH (2 BLADDER SYSTEM MUST MODIFY–REVISE WINGS AND ADD 6 RIVET HOLES, PER GUIDE MARKS ON FRAME AS REQD. 1 BOLSTER SYSTEM 6 HOLES NOT REQD.)	7–F2,21
98–01	Y07 CONVENIENCE PKG (AAB), RECL FRT BKT ST, LUXURY (AQ9)	12455536	1		FRAME, D/SEAT BK CUSH	7–F7,17
98–00	Y67 CONVENIENCE PKG (AAB), MAN RECL FRT BKT ST, DELUXE (AR9)	12455536	1		FRAME, D/SEAT BK CUSH	7–F7,17
98–00	Y67 6–WAY PWR P/SEAT ADJR (AG2), RECL FRT BKT ST, LUXURY (AQ9), IL3	12455536	1		FRAME, D/SEAT BK CUSH	7–F7,17
99	Y RECL FRT BKT ST, LUXURY (AQ9), IL3	12455474	1	171.00	FRAME, D/SEAT BK CUSH	7–F2,21
99	Y MAN RECL FRT BKT ST, DELUXE (AR9)	12455474	1	171.00	FRAME, D/SEAT BK CUSH	7–F2,21

© 2001 GENERAL MOTORS SERVICE PARTS OPERATIONS–CHEVROLET–15Y

cardiagn.com

11.373 BOLT – FRAME – INSULATOR – PANEL, Front Seat Back (Con't)

99–00	Y37 MAN RECL FRT BKT ST, DELUXE (AR9), (EXC CONVENIENCE PKG (AAB)	12455536	1		FRAME, D/SEAT BK CUSH	7–F7,17
99–02	Y37 MAN RECL FRT BKT ST, DELUXE (AR9)	12455536	1		FRAME, D/SEAT BK CUSH	7–F7,17
00	Y RECL FRT BKT ST, LUXURY (AQ9), IL3	12455536	1		FRAME, D/SEAT BK CUSH	7–F7,17
00	Y MAN RECL FRT BKT ST, DELUXE (AR9)	12455536	1		FRAME, D/SEAT BK CUSH	7–F7,17
01	Y67 CONVENIENCE PKG (AAB), RECL FRT BKT ST, LUXURY (AQ9)	12455536	1		FRAME, D/SEAT BK CUSH	7–F7,17
01–02	Y67 MAN RECL FRT BKT ST, DELUXE (AR9)	12455536	1		FRAME, D/SEAT BK CUSH	7–F7,17
02	Y07	12455536	1		FRAME, D/SEAT BK CUSH	7–F7,17
97	Y MAN RECL FRT BKT ST, DELUXE (AR9)	12455474	1	171.00	FRAME, P/SEAT BK CUSH	7–F2,21
97–98	Y RECL FRT BKT ST, LUXURY (AQ9), 6–WAY PWR P/SEAT ADJR (AG2), IL3	12455474	1	171.00	FRAME, P/SEAT BK CUSH (2 BLADDER SYSTEM MUST MODIFY–REVISE WINGS AND ADD 6 RIVET HOLES, PER GUIDE MARKS ON FRAME AS REQD. 1 BOLSTER SYSTEM 6 HOLES NOT REQD.)	7–F2,21
98	Y MAN RECL FRT BKT ST, DELUXE (AR9)	12455474	1	171.00	FRAME, P/SEAT BK CUSH (2 BLADDER SYSTEM MUST MODIFY–REVISE WINGS AND ADD 6 RIVET HOLES, PER GUIDE MARKS ON FRAME AS REQD. 1 BOLSTER SYSTEM 6 HOLES NOT REQD.)	7–F2,21
98	Y07 CONVENIENCE PKG (AAB), 6–WAY PWR P/SEAT ADJR (AG2), RECL FRT BKT ST, LUXURY (AQ9), IL3	12455536	1		FRAME, P/SEAT BK CUSH	7–F7,17
98–99	Y07 MAN RECL FRT BKT ST, DELUXE (AR9)	12455536	1		FRAME, P/SEAT BK CUSH	7–F7,17
98	Y67 CONVENIENCE PKG (AAB), MAN RECL FRT BKT ST, DELUXE (AR9)	12455536	1		FRAME, P/SEAT BK CUSH	7–F7,17
98–01	Y67 6–WAY PWR P/SEAT ADJR (AG2), RECL FRT BKT ST, LUXURY (AQ9), IL3	12455536	1		FRAME, P/SEAT BK CUSH	7–F7,17
99	Y MAN RECL FRT BKT ST, DELUXE (AR9)	12455474	1	171.00	FRAME, P/SEAT BK CUSH	7–F2,21
99–02	Y MAN RECL FRT BKT ST, DELUXE (AR9)	12455536	1		FRAME, P/SEAT BK CUSH	7–F7,17
99–02	Y07 6–WAY PWR P/SEAT ADJR (AG2), RECL FRT BKT ST. LUXURY (AQ9), IL3	12455536	1		FRAME, P/SEAT BK CUSH	7–F7,17
98	Y07–67 RECL FRT BKT ST, LUXURY (AQ9), 6–WAY PWR P/SEAT ADJR (AG2), IL3	12455474	1	171.00	FRAME, P/SEAT BK CUSH	7–F2,21
99–00	Y37 MAN RECL FRT BKT ST, DELUXE (AR9)	12455536	1		FRAME, P/SEAT BK CUSH	7–F7,17
00	Y07–67 RECL FRT BKT ST, LUXURY (AQ9), 6–WAY PWR P/SEAT ADJR (AG2), IL3	12455536	1		FRAME, P/SEAT BK CUSH	7–F7,17

cardiagn.com

11.373 BOLT – FRAME – INSULATOR – PANEL, Front Seat Back (Con't)

97–02	Y07	20464592	1	118.00	INSULATOR, F/SEAT BK BODY PNL (15.492)	7–I4,21
99–02	Y37	20464592	1	118.00	INSULATOR, F/SEAT BK BODY PNL (15.492)	7–I4,21
97–99	Y	10290554	LH	53.50	PANEL, F/SEAT BK BODY	6–D8,24
97–99	Y	10290555	RH	53.50	PANEL, F/SEAT BK BODY	6–D8,24
00	Y	10409443	RH	51.75	PANEL, F/SEAT BK BODY (W/O REINFORCEMENT) (10.527)	6–D8,24
00	Y	10409444	LH	51.50	PANEL, F/SEAT BK BODY (W/O REINFORCEMENT)	6–D8,24
01	Y (1ST DES)	10409443	RH	51.75	PANEL, F/SEAT BK BODY (W/O REINFORCEMENT) (10.527) (CARS BUILT WITH AND AFTER THE LAST EIGHT DIGIT OF VIN 15117747;FOR 2ND DESIGN SEE 10449456)	6–D8,24
01	Y (1ST DES)	10409444	LH	51.50	PANEL, F/SEAT BK BODY (W/O REINFORCEMENT) (CARS BUILT WITH AND AFTER THE LAST EIGHT DIGIT OF VIN 15117747;FOR 2ND DESIGN SEE 10449455)	6–D8,24
01	Y (2ND DES)	10449455	LH	51.75	PANEL, F/SEAT BK BODY (CARS BUILT PRIOR TO LAST 8 DIGITS OF VIN 15117747)	6–D8,24
01	Y (2ND DES)	10449456	RH	51.75	PANEL, F/SEAT BK BODY (CARS BUILT PRIOR TO LAST 8 DIGITS OF VIN 15117747)	6–D8,24
02	Y	10449455	LH	51.75	PANEL, F/SEAT BK BODY	6–D8,24
02	Y	10449456	RH	51.75	PANEL, F/SEAT BK BODY	6–D8,24

11.375 BRACKET, Front Seat Bottom Hinge

97–02	Y	10272746	2	9.10	BRACKET, D/SEAT BK CUSH PIV	7–F2,29
97–02	Y	10272746	2	9.10	BRACKET, P/SEAT BK CUSH PIV	7–F2,29

11.377 BOLT – CABLE – HANDLE – PIN – RECLINER – SPRING, Front Seat Back Reclining

97–98	Y MAN RECL FRT BKT ST, DELUXE (AR9)	14089631	1	3.33	BOLT, D/SEAT RECL (M8X1.25X21 16.3 O.D.) (RR) (11.390)	7–F7,27
97–98	Y MAN RECL FRT BKT ST, DELUXE (AR9), (EXC CONVENIENCE PKG (AAB)	16751144	3	*.08	BOLT, D/SEAT RECL ACTR CBL (08.977)	
97–98	Y RECL FRT BKT ST, LUXURY (AQ9), IL3	16751144	3	*.08	BOLT, D/SEAT RECL ACTR CBL (08.977)	
97–98	Y MAN RECL FRT BKT ST, DELUXE (AR9)	16751144	3	*.08	BOLT, P/SEAT RECL ACTR CBL (08.977)	
97–98	Y RECL FRT BKT ST, LUXURY (AQ9), 6–WAY PWR P/SEAT ADJR (AG2), IL3	16751144	3	*.08	BOLT, P/SEAT RECL ACTR CBL (08.977)	
97–02	Y	10278650	1	18.20	CABLE, D/SEAT RECL ACTR	7–F2,26
97–02	Y	10278653	1	18.20	CABLE, P/SEAT RECL ACTR	7–F2,26
97–02	Y	10272551	1	3.45	HANDLE, D/SEAT RECL (EBONY)	7–F2,9
97–02	Y	10272552	1	3.45	HANDLE, P/SEAT RECL	7–F2,9
97–02	Y07 RECL FRT BKT ST, LUXURY (AQ9), MAN RECL FRT BKT ST, DELUXE (AR9)	10277965	2	3.45	PIN, D/SEAT RECL (REAR)	7–F2,30
97–02	Y07 RECL FRT BKT ST, LUXURY (AQ9), MAN RECL FRT BKT ST, DELUXE (AR9)	10403494	2	.99	PIN, D/SEAT RECL (FRT) (WIRE SPIRAL PIN)	7–F2,35

© 2001 GENERAL MOTORS SERVICE PARTS OPERATIONS–CHEVROLET–15Y

cardiagn.com

11.377 BOLT – CABLE – HANDLE – PIN – RECLINER – SPRING, Front Seat Back Reclining (Con't)

98–02	Y67 RECL FRT BKT ST, LUXURY (AQ9), MAN RECL FRT BKT ST, DELUXE (AR9)	10277965	2	3.45	PIN, D/SEAT RECL (REAR)	7–F2,30
98–02	Y67 MAN RECL FRT BKT ST, DELUXE (AR9), RECL FRT BKT ST, LUXURY (AQ9)	10403494	2	.99	PIN, D/SEAT RECL (FRT) (WIRE SPIRAL PIN)	7–F2,35
99–02	Y37 MAN RECL FRT BKT ST, DELUXE (AR9)	10277965	2	3.45	PIN, D/SEAT RECL (REAR)	7–F2,30
99–02	Y37 MAN RECL FRT BKT ST, DELUXE (AR9)	10403494	2	.99	PIN, D/SEAT RECL (FRT) (WIRE SPIRAL PIN)	7–F2,35
97–02	Y07 RECL FRT BKT ST, LUXURY (AQ9), MAN RECL FRT BKT ST, DELUXE (AR9)	10277965	2	3.45	PIN, P/SEAT RECL (REAR)	7–F2,30
97–02	Y07 RECL FRT BKT ST, LUXURY (AQ9), MAN RECL FRT BKT ST, DELUXE (AR9)	10403494	2	.99	PIN, P/SEAT RECL (FRT) (WIRE SPIRAL PIN)	7–F2,35
98–02	Y67 RECL FRT BKT ST, LUXURY (AQ9), MAN RECL FRT BKT ST, DELUXE (AR9)	10277965	2	3.45	PIN, P/SEAT RECL (REAR)	7–F2,30
98–02	Y67 MAN RECL FRT BKT ST, DELUXE (AR9), RECL FRT BKT ST, LUXURY (AQ9)	10403494	2	.99	PIN, P/SEAT RECL (FRT) (WIRE SPIRAL PIN)	7–F2,35
99–02	Y37 MAN RECL FRT BKT ST, DELUXE (AR9)	10277965	2	3.45	PIN, P/SEAT RECL (REAR)	7–F2,30
99–02	Y37 MAN RECL FRT BKT ST, DELUXE (AR9)	10403494	2	.99	PIN, P/SEAT RECL (FRT) (WIRE SPIRAL PIN)	7–F2,35
97–02	Y	10272506	1	35.00	RECLINER, D/SEAT (INR)	7–F2,32
97–02	Y	10277957	1	35.00	RECLINER, D/SEAT (OTR)	7–F2,32
97–02	Y	10272506	1	35.00	RECLINER, P/SEAT (INR)	7–F2,32
97–02	Y	10277957	1	35.00	RECLINER, P/SEAT (OTR)	7–F2,32
97–02	Y	16749319	1	1.15	SPRING, D/SEAT RECL HDL	7–F2,10
97–01	Y	16749319	1	1.15	SPRING, P/SEAT RECL HDL	7–F2,10
02	Y37 MAN RECL FRT BKT ST, DELUXE (AR9)	16749319	1	1.15	SPRING, P/SEAT RECL HDL	7–F2,10

11.378 BLADDER – HARNESS – PUMP, Front Seat Lumbar

97–98	Y RECL FRT BKT ST, LUXURY (AQ9)	12455492	2	219.00	BLADDER, D/SEAT LATERAL SUPT	7–F2,23
99	Y07–67 RECL FRT BKT ST, LUXURY (AQ9)	12455492	2	219.00	BLADDER, D/SEAT LATERAL SUPT	7–F2,23
97	Y07 RECL FRT BKT ST, LUXURY (AQ9)	12455492	1	219.00	BLADDER, D/SEAT LUMBAR SUPT	7–F2,23
98	Y RECL FRT BKT ST, LUXURY (AQ9), (1ST DES)	12455492	1	219.00	BLADDER, D/SEAT LUMBAR SUPT	7–F2,23
98	Y RECL FRT BKT ST, LUXURY (AQ9), (1ST DES)	12455492	1	219.00	BLADDER, D/SEAT LUMBAR SUPT (USED W/2–BLADDER BOLSTER SEAT SYSTEM) (FOR 2ND DES SEE 12455475)	7–F2,23
99–02	Y07 RECL FRT BKT ST, LUXURY (AQ9)	12455492	1	219.00	BLADDER, D/SEAT LUMBAR SUPT	7–F2,23
99–02	Y67 RECL FRT BKT ST, LUXURY (AQ9)	12455492	1	219.00	BLADDER, D/SEAT LUMBAR SUPT	7–F2,23
99	Y07–67 RECL FRT BKT ST, LUXURY (AQ9)	12455492	1	219.00	BLADDER, D/SEAT THIGH SUPT	7–F2,23
00–01	Y67 RECL FRT BKT ST, LUXURY (AQ9)	12455492	1	219.00	BLADDER, D/SEAT THIGH SUPT	7–F2,23
97	Y RECL FRT BKT ST, LUXURY (AQ9)	12455492	2	219.00	BLADDER, P/SEAT LATERAL SUPT	7–F2,23

cardiagn.com

11.378 BLADDER – HARNESS – PUMP, Front Seat Lumbar (Con't)

98	Y RECL FRT BKT ST, LUXURY (AQ9), (1ST DES)	12455492	2	219.00	BLADDER, P/SEAT LATERAL SUPT	7–F2,23
99	Y07–67 RECL FRT BKT ST, LUXURY (AQ9)	12455492	2	219.00	BLADDER, P/SEAT LATERAL SUPT	7–F2,23
97	Y07 RECL FRT BKT ST, LUXURY (AQ9)	12455492	1	219.00	BLADDER, P/SEAT LUMBAR SUPT	7–F2,23
96	Y RECL FRT BKT ST, LUXURY (AQ9)	12455492	1	219.00	BLADDER, P/SEAT LUMBAR SUPT	7–F2,23
98	Y RECL FRT BKT ST, LUXURY (AQ9), (1ST DES)	12455492	1	219.00	BLADDER, P/SEAT LUMBAR SUPT (USED W/2–BLADDER BOLSTER SEAT SYSTEM) (FOR 2ND DES SEE 12455475)	7–F2,23
99–02	Y07–67 RECL FRT BKT ST, LUXURY (AQ9)	12455492	1	219.00	BLADDER, P/SEAT LUMBAR SUPT	7–F2,23
99–02	Y07–67	12455470	1	82.00	HARNESS, D/SEAT AIR SPLY ...	7–F21,44
97	Y RECL FRT BKT ST, LUXURY (AQ9), IL3	10273427	1	152.00	PUMP, D/SEAT & P/SEAT CUSH AIR	7–F2,39
98	Y RECL FRT BKT ST, LUXURY (AQ9), IL3, (1ST DES)	10273427	1	152.00	PUMP, D/SEAT & P/SEAT CUSH AIR (USED W/2–BLADDER BOLSTER SEAT SYSTEM) (FOR 2ND DES SEE 12455475)	7–F2,39
98–02	Y07–67 RECL FRT BKT ST, LUXURY (AQ9)	12455493	1	152.00	PUMP, D/SEAT & P/SEAT CUSH AIR	7–F14,39
00	Y67 RECL FRT BKT ST, LUXURY (AQ9)	10273427	1	152.00	PUMP, D/SEAT & P/SEAT CUSH AIR	7–F2,39

11.379 BRACKET – SPRING, Front Seat Bolster

97	Y07 RECL FRT BKT ST, LUXURY (AQ9), IL3	10285825	LH	27.75	BRACKET, D/SEAT BK CUSH SI BOLS ADJ (OTR)	7–F2,13
97	Y07 RECL FRT BKT ST, LUXURY (AQ9), IL3	10285826	RH	27.75	BRACKET, D/SEAT BK CUSH SI BOLS ADJ (INR)	7–F2,13
97	Y07 RECL FRT BKT ST, LUXURY (AQ9), IL3	12455492	LH	219.00	BRACKET, D/SEAT BK CUSH SI BOLS ADJ (OTR) (11.378)	7–F2,13
97	Y07 RECL FRT BKT ST, LUXURY (AQ9), IL3	12455492	RH	219.00	BRACKET, D/SEAT BK CUSH SI BOLS ADJ (INR) (11.378)	7–F2,13
98–00	Y07–67 RECL FRT BKT ST, LUXURY (AQ9)	10285825	LH	27.75	BRACKET, D/SEAT BK CUSH SI BOLS ADJ (OTR)	7–F2,13
98–00	Y07–67 RECL FRT BKT ST, LUXURY (AQ9)	10285826	RH	27.75	BRACKET, D/SEAT BK CUSH SI BOLS ADJ (INR)	7–F2,13
97	Y07 6–WAY PWR P/SEAT ADJR (AG2), RECL FRT BKT ST, LUXURY (AQ9), IL3	10285825	LH	27.75	BRACKET, P/SEAT BK CUSH SI BOLS ADJ (INR)	7–F2,13
97	Y07 6–WAY PWR P/SEAT ADJR (AG2), RECL FRT BKT ST, LUXURY (AQ9), IL3	10285826	RH	27.75	BRACKET, P/SEAT BK CUSH SI BOLS ADJ (OTR)	7–F2,13
97	Y07 6–WAY PWR P/SEAT ADJR (AG2), RECL FRT BKT ST, LUXURY (AQ9), IL3	12455492	LH	219.00	BRACKET, P/SEAT BK CUSH SI BOLS ADJ (INR) (11.378)	7–F2,13
97	Y07 6–WAY PWR P/SEAT ADJR (AG2), RECL FRT BKT ST, LUXURY (AQ9), IL3	12455492	RH	219.00	BRACKET, P/SEAT BK CUSH SI BOLS ADJ (OTR) (11.378)	7–F2,13
98–00	Y07–67 6–WAY PWR P/SEAT ADJR (AG2), RECL FRT BKT ST, LUXURY (AQ9)	10285825	LH	27.75	BRACKET, P/SEAT BK CUSH SI BOLS ADJ (INR)	7–F2,13
98–00	Y07–67 6–WAY PWR P/SEAT ADJR (AG2), RECL FRT BKT ST, LUXURY (AQ9)	10285826	RH	27.75	BRACKET, P/SEAT BK CUSH SI BOLS ADJ (OTR)	7–F2,13
98–02	Y	12455537	2		SPRING, P/SEAT BK CUSH SI BOLS PNL RTN	

cardiagn.com

11.390 BEZEL – CABLE – RIVET, Front Seat Back Lock

97–02	Y MAN RECL FRT BKT ST, DELUXE (AR9), (19I)	10288900	1	1.40	BEZEL, D/SEAT BK CUSH LAT REL HDL (BLACK)	7–F2,8
97–99	Y RECL FRT BKT ST, LUXURY (AQ9), (943)	10288901	1	1.40	BEZEL, D/SEAT BK CUSH LAT REL HDL (RED)	7–F2,8
97–99	Y MAN RECL FRT BKT ST, DELUXE (AR9), (94I)	10288901	1	1.40	BEZEL, D/SEAT BK CUSH LAT REL HDL (RED)	7–F2,8
97–01	Y MAN RECL FRT BKT ST, DELUXE (AR9), (92I)	10288902	1	1.40	BEZEL, D/SEAT BK CUSH LAT REL HDL (PEWTER)	7–F2,8
97–02	Y RECL FRT BKT ST, LUXURY (AQ9), (923)	10288902	1	1.40	BEZEL, D/SEAT BK CUSH LAT REL HDL (PEWTER)	7–F2,8
97	Y07 RECL FRT BKT ST, LUXURY (AQ9), (193)	10288900	1	1.40	BEZEL, D/SEAT BK CUSH LAT REL HDL (BLACK)	7–F2,8
98–01	Y MAN RECL FRT BKT ST, DELUXE (AR9), (67I)	10288903	1	1.40	BEZEL, D/SEAT BK CUSH LAT REL HDL (CAMEL)	7–F7,8
98–02	Y07–67 RECL FRT BKT ST, LUXURY (AQ9), (193)	10288900	1	1.40	BEZEL, D/SEAT BK CUSH LAT REL HDL (BLACK)	7–F2,8
98–02	Y07–67 RECL FRT BKT ST, LUXURY (AQ9), (673)	10288903	1	1.40	BEZEL, D/SEAT BK CUSH LAT REL HDL (CAMEL)	7–F7,8
00–02	Y MAN RECL FRT BKT ST, DELUXE (AR9), (70I)	10408563	1	1.40	BEZEL, D/SEAT BK CUSH LAT REL HDL (RED)	7–F7,8
00–02	Y07–67 RECL FRT BKT ST, LUXURY (AQ9), (70I)	10408563	1	1.40	BEZEL, D/SEAT BK CUSH LAT REL HDL (RED)	7–F7,8
97–02	Y MAN RECL FRT BKT ST, DELUXE (AR9), (19I)	10288900	1	1.40	BEZEL, P/SEAT BK CUSH LAT REL HDL (BLACK)	7–F2,8
97–99	Y RECL FRT BKT ST, LUXURY (AQ9), (943)	10288901	1	1.40	BEZEL, P/SEAT BK CUSH LAT REL HDL (RED)	7–F2,8
97–99	Y MAN RECL FRT BKT ST, DELUXE (AR9), (94I)	10288901	1	1.40	BEZEL, P/SEAT BK CUSH LAT REL HDL (RED)	7–F2,8
97–01	Y RECL FRT BKT ST, LUXURY (AQ9), (923)	10288902	1	1.40	BEZEL, P/SEAT BK CUSH LAT REL HDL (PEWTER)	7–F2,8
97–02	Y MAN RECL FRT BKT ST, DELUXE (AR9), (92I)	10288902	1	1.40	BEZEL, P/SEAT BK CUSH LAT REL HDL (PEWTER)	7–F2,8
97	Y07 RECL FRT BKT ST, LUXURY (AQ9), (193)	10288900	1	1.40	BEZEL, P/SEAT BK CUSH LAT REL HDL (BLACK)	7–F2,8
98–02	Y MAN RECL FRT BKT ST, DELUXE (AR9), (67I)	10288903	1	1.40	BEZEL, P/SEAT BK CUSH LAT REL HDL (CAMEL)	7–F7,8
98–02	Y07–67 RECL FRT BKT ST, LUXURY (AQ9), (193)	10288900	1	1.40	BEZEL, P/SEAT BK CUSH LAT REL HDL (BLACK)	7–F2,8
98–02	Y07–67 RECL FRT BKT ST, LUXURY (AQ9), (673)	10288903	1	1.40	BEZEL, P/SEAT BK CUSH LAT REL HDL (CAMEL)	7–F7,8
00	Y MAN RECL FRT BKT ST, DELUXE (AR9), (70I)	10408563	1	1.40	BEZEL, P/SEAT BK CUSH LAT REL HDL (RED)	7–F7,8
00–02	Y07–67 RECL FRT BKT ST, LUXURY (AQ9), (703)	10408563	1	1.40	BEZEL, P/SEAT BK CUSH LAT REL HDL (RED)	7–F7,8
02	Y07–67 RECL FRT BKT ST, LUXURY (AQ9), (923)	10288902	1	1.40	BEZEL, P/SEAT BK CUSH LAT REL HDL (PEWTER)	7–F2,8
97–02	Y07 RECL FRT BKT ST, LUXURY (AQ9), (19I)	10288904	1	27.25	CABLE, D/SEAT BK CUSH LAT REL (BLACK)	7–F2,20
97–02	Y07 MAN RECL FRT BKT ST, DELUXE (AR9), (19I)	10288904	1	27.25	CABLE, D/SEAT BK CUSH LAT REL (BLACK)	7–F2,20
97–99	Y07 RECL FRT BKT ST, LUXURY (AQ9), (943)	10288905	1	27.25	CABLE, D/SEAT BK CUSH LAT REL (RED)	7–F2,20
97–99	Y07 MAN RECL FRT BKT ST, DELUXE (AR9), (943)	10288905	1	27.25	CABLE, D/SEAT BK CUSH LAT REL (RED)	7–F2,20
97–01	Y07 MAN RECL FRT BKT ST, DELUXE (AR9), (92I)	10288906	1	27.25	CABLE, D/SEAT BK CUSH LAT REL (PEWTER)	7–F2,20
97–02	Y07 RECL FRT BKT ST, LUXURY (AQ9), (92I)	10288906	1	27.25	CABLE, D/SEAT BK CUSH LAT REL (PEWTER)	7–F2,20

cardiagn.com

11.390 BEZEL – CABLE – RIVET, Front Seat Back Lock (Con't)

98–02	Y07 RECL FRT BKT ST, LUXURY (AQ9), MAN RECL FRT BKT ST, DELUXE (AR9), (67I)	10288907	1	27.25	CABLE, D/SEAT BK CUSH LAT REL (OAK)	7–F7,16
98–02	Y67	10409022	1	29.00	CABLE, D/SEAT BK CUSH LAT REL (BLACK) (W/LEVER) (W/2 PIGTAILS)	7–F7,16
99–02	Y37 MAN RECL FRT BKT ST, DELUXE (AR9), (19I), (EXC CONVENIENCE PKG (AAB)	10288904	1	27.25	CABLE, D/SEAT BK CUSH LAT REL (BLACK)	7–F2,20
00–02	Y07 MAN RECL FRT BKT ST, DELUXE (AR9), RECL FRT BKT ST, LUXURY (AQ9), (70I)	10408562	1	27.25	CABLE, D/SEAT BK CUSH LAT REL (RED)	7–F7,16
01–02	Y37 MAN RECL FRT BKT ST, DELUXE (AR9), (70I)	10408562	1	27.25	CABLE, D/SEAT BK CUSH LAT REL (RED)	7–F7,16
02	Y07 MAN RECL FRT BKT ST, DELUXE (AR9), (92I)	10288906	1	27.25	CABLE, D/SEAT BK CUSH LAT REL (PEWTER)	7–F2,20
97–02	Y07 MAN RECL FRT BKT ST, DELUXE (AR9), RECL FRT BKT ST, LUXURY (AQ9), (19I)	10288904	1	27.25	CABLE, P/SEAT BK CUSH LAT REL (BLACK)	7–F2,20
97–99	Y07 RECL FRT BKT ST, LUXURY (AQ9), (943)	10288905	1	27.25	CABLE, P/SEAT BK CUSH LAT REL (RED)	7–F2,20
97–99	Y07 MAN RECL FRT BKT ST, DELUXE (AR9), (943)	10288905	1	27.25	CABLE, P/SEAT BK CUSH LAT REL (RED)	7–F2,20
97–99	Y07 RECL FRT BKT ST, LUXURY (AQ9), (92I)	10288906	1	27.25	CABLE, P/SEAT BK CUSH LAT REL (PEWTER)	7–F2,20
97–02	Y07 MAN RECL FRT BKT ST, DELUXE (AR9), RECL FRT BKT ST, LUXURY (AQ9), (92I)	10288906	1	27.25	CABLE, P/SEAT BK CUSH LAT REL (PEWTER)	7–F2,20
98–02	Y07 MAN RECL FRT BKT ST, DELUXE (AR9), RECL FRT BKT ST, LUXURY (AQ9), (67I)	10288907	1	27.25	CABLE, P/SEAT BK CUSH LAT REL (OAK)	7–F7,16
98–02	Y07–67 MAN RECL FRT BKT ST, DELUXE (AR9), RECL FRT BKT ST, LUXURY (AQ9)	12455538	2	27.25	CABLE, P/SEAT BK CUSH LAT REL (W/1 PIGTAIL)	7–F7,16
98–02	Y67	10409022	1	29.00	CABLE, P/SEAT BK CUSH LAT REL (BLACK) (W/LEVER) (W/2 PIGTAILS)	7–F7,16
99–00	Y37 MAN RECL FRT BKT ST, DELUXE (AR9), (19I)	10288904	1	27.25	CABLE, P/SEAT BK CUSH LAT REL (BLACK)	7–F2,20
99–02	Y37 MAN RECL FRT BKT ST, DELUXE (AR9)	12455538	2	27.25	CABLE, P/SEAT BK CUSH LAT REL (W/1 PIGTAIL)	7–F7,16
00–02	Y07 RECL FRT BKT ST, LUXURY (AQ9), (70I)	10408562	1	27.25	CABLE, P/SEAT BK CUSH LAT REL (RED)	7–F7,16
98–00	Y07–67 MAN RECL FRT BKT ST, DELUXE (AR9), RECL FRT BKT ST, LUXURY (AQ9)	22654286	2	4.55	RIVET, P/SEAT BK CUSH LAT REL CBL (04.047)	
00	Y37 MAN RECL FRT BKT ST, DELUXE (AR9)	22654286	2	4.55	RIVET, P/SEAT BK CUSH LAT REL CBL (04.047)	
01–02	Y07–67 MAN RECL FRT BKT ST, DELUXE (AR9)	22654286	2	4.55	RIVET, P/SEAT BK CUSH LAT REL CBL (04.047)	
01–02	Y37 MAN RECL FRT BKT ST, DELUXE (AR9)	22654286	2	4.55	RIVET, P/SEAT BK CUSH LAT REL CBL (04.047)	

cardiagn.com

11.419 FRAME – RETAINER – RIVET – SPRING – WIRE, Front Seat Cushion

97–02	Y	12455425	1	192.00	FRAME, D/SEAT CUSH (3 ATTACHING HOLES FOR CUSHION PANEL)	7–F2,34
97	Y	12455425	1	192.00	FRAME, P/SEAT CUSH (3 ATTACHING HOLES FOR CUSHION PANEL)	7–F2,34
98	Y RECL FRT BKT ST, LUXURY (AQ9)	12455425	1	192.00	FRAME, P/SEAT CUSH (3 ATTACHING HOLES FOR CUSHION PANEL)	7–F2,34
98–02	Y	12455425	1	192.00	FRAME, P/SEAT CUSH (3 ATTACHING HOLES FOR CUSHION PANEL)	7–F2,34
00–01	Y07 CONVENIENCE PKG (AAB), RECL FRT BKT ST, LUXURY (AQ9), IL3, T&T WHL (N37)	16674629	6	*3.45	RETAINER, D/SEAT CUSH RET (FASTNER–PUSH–IN FITS HOLE 6.35, OD–25.4, LEN–18, SGL HEAD) (15.222)	
02	Y07 RECL FRT BKT ST, LUXURY (AQ9)	20511451	2	3.45	RETAINER, D/SEAT CUSH RET (12.800)	
01–02	Y37 MAN RECL FRT BKT ST, DELUXE (AR9)	22654286	1	4.55	RETAINER, P/SEAT CUSH (04.047)	
97	Y	10285827	12	3.45	RIVET, D/SEAT CUSH FRM	7–F2,34
97	Y07	10285827	12	3.45	RIVET, P/SEAT CUSH FRM	7–F2,34
98–02	Y	12455540	4	1.75	SPRING, D/SEAT CUSH PAD SUPT WIRE (16.716)	
99–02	Y	12455540	4	1.75	SPRING, P/SEAT CUSH PAD SUPT WIRE (16.716)	
97–02	Y	10272689	1	3.45	WIRE, D/SEAT CUSH PAD SUPT	7–F2,40
97–02	Y	10272689	1	3.45	WIRE, P/SEAT CUSH PAD SUPT	7–F2,40

11.556 RELAY, Front Seat Adjuster

97–02	Y	10406008	1	109.00	RELAY, ST ADJR	7–F2,2

11.558 MODULE – SWITCH, Front Seat Adjuster

97	Y07 RECL FRT BKT ST, LUXURY (AQ9), MAN RECL FRT BKT ST, DELUXE (AR9)	9360841	1	223.00	MODULE, D/SEAT CONT	7–F2,1
98–99	Y07–67 RECL FRT BKT ST, LUXURY (AQ9)	9360841	1	223.00	MODULE, D/SEAT CONT	7–F2,1
98–99	Y07–67 CONVENIENCE PKG (AAB), MAN RECL FRT BKT ST, DELUXE (AR9)	9360841	1	223.00	MODULE, D/SEAT CONT	7–F2,1
00–02	Y CONVENIENCE PKG (AAB), MAN RECL FRT BKT ST, DELUXE (AR9)	10435193	1	223.00	MODULE, D/SEAT CONT	7–F7,1
00–02	Y07–67 RECL FRT BKT ST, LUXURY (AQ9)	10435193	1	223.00	MODULE, D/SEAT CONT	7–F7,1
97–01	Y RECL FRT BKT ST, LUXURY (AQ9)	12135158	1	54.75	SWITCH, D/SEAT ADJR (W/LUMBAR SWITCH)	7–F2,6
97–02	Y MAN RECL FRT BKT ST, DELUXE (AR9)	12135159	1	111.00	SWITCH, D/SEAT ADJR	7–F7,6
02	Y07–67 RECL FRT BKT ST, LUXURY (AQ9)	12135158	1	54.75	SWITCH, D/SEAT ADJR (W/LUMBAR SWITCH)	7–F2,6
97–01	Y RECL FRT BKT ST, LUXURY (AQ9)	12135158	1	54.75	SWITCH, P/SEAT ADJR (W/LUMBAR SWITCH)	7–F2,6
97–01	Y MAN RECL FRT BKT ST, DELUXE (AR9)	12135159	1	111.00	SWITCH, P/SEAT ADJR	7–F7,6
02	Y07–67 RECL FRT BKT ST, LUXURY (AQ9)	12135158	1	54.75	SWITCH, P/SEAT ADJR (W/LUMBAR SWITCH)	7–F2,6

cardiagn.com

11.561 ADJUSTER – BRACKET – BUSHING – NUT – RETAINER, Front Seat Adjuster

97	Y CONVENIENCE PKG (AAB)	12455481	1	704.00	ADJUSTER, D/SEAT	7–F2,42
97	Y RECL FRT BKT ST, LUXURY (AQ9), CONVENIENCE PKG (AAB)	88898621	1	690.00	ADJUSTER, D/SEAT	7–F7,35
97	Y MAN RECL FRT BKT ST, DELUXE (AR9), CONVENIENCE PKG (AAB)	88898621	1	690.00	ADJUSTER, D/SEAT	7–F7,35
97–00	Y07 RECL FRT BKT ST, LUXURY (AQ9), (EXC CONVENIENCE PKG (AAB)	12455535	1	492.00	ADJUSTER, D/SEAT	7–F2,41
97–00	Y07 MAN RECL FRT BKT ST, DELUXE (AR9), (EXC CONVENIENCE PKG (AAB)	12455535	1	492.00	ADJUSTER, D/SEAT	7–F2,41
98–00	Y07–67 CONVENIENCE PKG (AAB)	12453481	1	704.00	ADJUSTER, D/SEAT	7–F2,42
98–00	Y07–67 MAN RECL FRT BKT ST, DELUXE (AR9), CONVENIENCE PKG (AAB)	8889b621	1	690.00	ADJUSTER, D/SEAT	7–F7,35
98–02	Y07–67 RECL FRT BKT ST, LUXURY (AQ9), CONVENIENCE PKG (AAB)	88898621	1	690.00	ADJUSTER, D/SEAT	7–F7,35
98–00	Y67 MAN RECL FRT BKT ST, DELUXE (AR9), (EXC CONVENIENCE PKG (AAB)	12455535	1	492.00	ADJUSTER, D/SEAT	7–F2,41
98–00	Y67 RECL FRT BKT ST, LUXURY (AQ9), (EXC CONVENIENCE PKG (AAB)	12455535	1	492.00	ADJUSTER, D/SEAT	7–F2,41
99–00	Y37 MAN RECL FRT BKT ST, DELUXE (AR9), (EXC 6–WAY PWR D/SEAT ADJR (AG1)	10257833	1	533.00	ADJUSTER, D/SEAT (2 WAY)	7–F7,35
99–00	Y37 6–WAY PWR D/SEAT ADJR (AG1), MAN RECL FRT BKT ST, DELUXE (AR9), (EXC CONVENIENCE PKG (AAB)	12455535	1	492.00	ADJUSTER, D/SEAT	7–F2,41
01–02	Y07–67 MAN RECL FRT BKT ST, DELUXE (AR9), (EXC CONVENIENCE PKG (AAB)	88898622	1	492.00	ADJUSTER, D/SEAT	7–F7,35
01–02	Y37 MAN RECL FRT BKT ST, DELUXE (AR9), CONVENIENCE PKG (AAB)	88898621	1	690.00	ADJUSTER, D/SEAT	7–F7,35
01–02	Y37 MAN RECL FRT BKT ST, DELUXE (AR9) CONVENIENCE PKG (AAB)	88898621	1	690.00	ADJUSTER, D/SEAT	7–F7,35
01–02	Y37 MAN RECL FRT BKT ST, DELUXE (AR9), (EXC CONVENIENCE PKG (AAB)	88898622	1	492.00	ADJUSTER, D/SEAT	7–F7,35
97–98	Y MAN RECL FRT BKT ST, DELUXE (AR9), (EXC 6–WAY PWR P/SEAT ADJR (AG2)	10257906	1	446.00	ADJUSTER, P/SEAT	7–F7,34
97	Y 6–WAY PWR P/SEAT ADJR (AG2)	12455534	1	492.00	ADJUSTER, P/SEAT	7–F2,41
98–00	Y07–67 6–WAY PWR P/SEAT ADJR (AG2), REC'. FRT BKT ST, LUXURY (AQ9), MAN RECL FRT BKT ST, DELUXE (AR9)	12455534	1	492.00	ADJUSTER, P/SEAT	7–F2,41

cardiagn.com

11.561 ADJUSTER – BRACKET – BUSHING – NUT – RETAINER, Front Seat Adjuster (Con't)

99–02	Y MAN RECL FRT BKT ST, DELUXE (AR9)	10257906	1	446.00	ADJUSTER, P/SEAT	7–F7,34
01–02	Y07–67 RECL FRT BKT ST, LUXURY (AQ9)	88898623	1	492.00	ADJUSTER, P/SEAT	7–F21,41
98–02	Y	10410578	1	5.25	BRACKET, D/SEAT ADJR FRT ...	7–F7,37
98–02	Y	10410578	1	5.25	BRACKET, P/SEAT ADJR FRT ...	7–F7,37
97–98	Y07–67	10403495	2		BUSHING, P/SEAT (11.573)	
99–02	Y	10403495	2		BUSHING, P/SEAT (11.573)	
98–00	Y MAN RECL FRT BKT ST, DELUXE (AR9), (ALL MODELS ALL YEARS)	11514596	2	4.53	NUT, F/SEAT ADJR (M8X1.25) (08.915) (AC–DELCO #11514596)	
98–00	Y07–67 RECL FRT BKT ST, LUXURY (AQ9)	11514596	2	4.53	NUT, F/SEAT ADJR (M8X1.25) (08.915) (AC–DELCO #11514596)	
01	Y MAN RECL FRT BKT ST, DELUXE (AR9)	20511451	2	3.45	RETAINER, D/SEAT ADJR LAT PIN (PUSH ON) (12.800)	
02	Y37 MAN RECL FRT BKT ST, DELUXE (AR9)	20511451	2	3.45	RETAINER, D/SEAT ADJR LAT PIN (PUSH ON) (12.800)	
01–02	Y37 MAN RECL FRT BKT ST, DELUXE (AR9)	20511451	2	3.45	RETAINER, P/SEAT ADJR LAT PIN (PUSH ON) (12.800)	

11.573 BUSHING – COVER – RETAINER, Front Seat Adjuster Track

97–98	Y07–67	10403493	2		BUSHING, D/SEAT	
99–02	Y	10403495	2		BUSHING, D/SEAT	
97–02	Y	10246916	2	3.45	COVER, D/SEAT ADJR FIN	7–F2,5
97–02	Y	10246916	2	3.45	COVER, P/SEAT ADJR FIN	7–F2,5
97–02	Y	10134407	1	*.54	RETAINER, D/SEAT INR ADJR FRT FIN CVR (PUSH IN) (01.272) ..	7–F2,4
97–02	Y	10134407	1	*.54	RETAINER, D/SEAT OTR ADJR FRT FIN CVR (PUSH IN) (01.272) ..	7–F2,4
97–02	Y	10134407	1	*.54	RETAINER, P/SEAT INR ADJR FRT FIN CVR (PUSH IN) (01.272) ..	7–F2,4
97–02	Y	10134407	1	*.54	RETAINER, P/SEAT OTR ADJR FRT FIN CVR (PUSH IN) (01.272) ..	7–F2,4

11.589 WIRE, Front Seat Adjuster Lock

99–00	Y37 MAN RECL FRT BKT ST, DELUXE (AR9), (EXC 6–WAY PWR D/SEAT ADJR (AG1)	12455472	1	15.10	WIRE, D/SEAT ADJR LAT	7–F7,28

11.620 MOLDING, Folding Rear Seat

99–02	Y37	10258601	1	14.60	MOLDING, R/WDO LWR GARN (11.120)	6–C6,15

11.927 CONNECTOR – INVERTER – SOCKET, Courtesy/Dome/Reading Lamp

97–02	Y	12085535	2	18.01	CONNECTOR, LP–CTSY (2–WAY F W/LEADS W/INDEX TAB OTR EDGE OF CAVITY B) (02.535) (AC–DELCO #PT146)	5–I4,12
01–02	YY67	12166036	1	50.49	CONNECTOR, LP–CTSY (W/LEADS & LENS) (10.275) (AC–DELCO #LS66)	5–I4,12
97–99	Y	12533421	1	458.00	INVERTER, LUMINESCENT LP ..	5–G12,39
00–02	Y (EXC HEAD UP DISPLAY (UV6)	12533421	1	458.00	INVERTER, LUMINESCENT LP ..	5–G12,39

cardiagn.com

11.927 CONNECTOR – INVERTER – SOCKET, Courtesy/Dome/Reading Lamp (Con't)

02	YY37 ELEK GA CSTR (U52) .	12533421	1	458.00	INVERTER, LUMINESCENT LP ..	5–G12,39
97–02	Y 6–SPD M/TRANS (MM6), 4–SPD A/TRANS (M30), A/C FRT AUTO/AUX CONT (CJ2), A/C MAN CONT (C60)	12166036	2	50.49	SOCKET, C/LP (W/LEADS & LENS) (10.275) (AC–DELCO #LS66) .	5–I4,12
99–01	Y	12166036	2	50.49	SOCKET, I/P C/LP (W/LEADS & LENS) (10.275) (AC–DELCO #LS66)	5–I4,12

11.935 CONNECTOR, Courtesy/Dome/Reading Lamp

97–02	Y	12117371	2	25.70	CONNECTOR, SW–DM LP (3–WAY M W/LEADS) (02.530) (AC–DELCO #PT504)	6–C12,32

cardiagn.com

21.552A PANEL PKG – WINDOW PKG, Roof (Production)

97–02	Y07 CLEAR ROOF PANEL (CC3), DUAL REMOVEABLE ROOF (C2L) .	12370935	1	1192.00	WINDOW PKG, RF LIFT OFF (BLUE) (INSTALL .25) (TRANSPARENT) (12.810)

2.187 KEY, Ignition and Locks

97–02	Y	02852556	1	28.71	KEY, DR LK & IGN LK (UNCODED) (RESISTOR CODE #2)
97–02	Y	02852557	1	28.71	KEY, DR LK & IGN LK (UNCODED) (RESISTOR CODE #3)
97–02	Y	02852558	1	28.71	KEY, DR LK & IGN LK (UNCODED) (RESISTOR CODE #4)
97–02	Y	02852559	1	28.71	KEY, DR LK & IGN LK (UNCODED) (RESISTOR CODE #5)
97–02	Y	02852560	1	28.71	KEY, DR LK & IGN LK (UNCODED) (RESISTOR CODE #6)
97–02	Y	02852561	1	28.71	KEY, DR LK & IGN LK (UNCODED) (RESISTOR CODE #7)
97–02	Y	02852562	1	28.71	KEY, DR LK & IGN LK (UNCODED) (RESISTOR CODE #8)
97–02	Y	02852563	1	28.71	KEY, DR LK & IGN LK (UNCODED) (RESISTOR CODE #9)
97–02	Y	02852564	1	28.71	KEY, DR LK & IGN LK (UNCODED) (RESISTOR CODE #10)
97–02	Y	02852565	1	28.71	KEY, DR LK & IGN LK (UNCODED) (RESISTOR CODE #11)
97–02	Y	02852566	1	28.71	KEY, DR LK & IGN LK (UNCODED) (RESISTOR CODE #12)
97–02	Y	02852567	1	28.71	KEY, DR LK & IGN LK (UNCODED) (RESISTOR CODE #13)
97–02	Y	02852568	1	28.71	KEY, DR LK & IGN LK (UNCODED) (RESISTOR CODE #14)
97–02	Y	02852569	1	28.71	KEY, DR LK & IGN LK (UNCODED) (RESISTOR CODE #15)

2.188 BOLT – CONNECTOR – CYLINDER KIT – HOUSING – NUT – RETAINER – SPRING – SWITCH – TUMBLER, Ignition Switch

97	Y	26036497	3	3.38	BOLT, IGN LK CYL CASE (M5X.8X15) (PAN HD TORX TAP) (06.760)
98	Y (EXC STRG COL (NP7) (EXPORT)	26036497	3	3.38	BOLT, IGN LK CYL CASE (M5X.8X15) (PAN HD TORX TAP) (06.760)
99–02	Y	26036497	3	3.38	BOLT, IGN LK CYL CASE (M5X.8X15) (PAN HD TORX TAP) (06.760)
97	Y	26036496	1	3.33	BOLT, IGN SW (M4.55 TAP X15) (EXT TORX FLG HD)
97–02	Y	10404727	1	13.93	HOUSING, IGN & START SW
97	Y	10237960	2	.46	NUT, IGN & START SW (M6X1.0) (10.51[illegible])
98–02	Y	10410398	2	*.51	NUT, IGN & START SW (M6X1.0 ITR "D" THD) (10.512)
97–02	Y	10246348	1	63.29	SWITCH, IGN & START (AC–DELCO #D1499C)

2.240 BOLT – CONNECTOR – RETAINER, Chassis Electric Diagnostic

97–01	Y	12110250	1	*1.73	CONNECTOR, DATA LINK (16–WAY F W/O LEADS W/MTG TABS) (AC–DELCO #PT1477)
97–01	Y	15305914	1	60.86	CONNECTOR, DATA LINK (12–WAY F) (W/LEADS AND CAP) (AC–DELCO #PT1101)

cardiagn.com

2.440 BOLT – CONNECTOR – RETAINER, Chassis Electric Diagnostic(Con't)

02	YY67	12110250	1	*1.73	CONNECTOR, DATA LINK (16–WAY F W/O LEADS W/MTG TABS) (AC–DELCO #PT1477)
02	YY67	15305914	1	60.96	CONNECTOR, DATA LINK (12–WAY FEMALE GT 150 (W/LEADS) .) (12–WAY F) (W/LEADS AND CAP) (AC–DELCO #PT1101)

2.461 CONNECTOR, Capsule/Headlamp Warning

01–02	YY67	12085535	1	18.01	CONNECTOR, SEN–HDLP AUTO CONT AMB LGT (2–WAY F W/LEADS W/INDEX TAB OTR EDGE OF CAVITY B) (02.535) (AC–DELCO #PT146)

2.480 HARNESS – WIRE, Chassis Wiring

97–02	Y 4–SPD A/TRANS (M30)	15320476	1	82.75	HARNESS, A/TRNS WRG (INCLS TCC SOL VLV) (AC–DELCO #15320476)
97–98	Y	12130416	1	131.58	HARNESS, F/PMP WRG
99	Y	12189531	1	131.58	HARNESS, F/PMP WRG
00–02	Y	12189905	1		HARNESS, F/PMP WRG (HARN TO JMPR)
00–02	Y	12189906	1		HARNESS, F/PMP WRG (HARN JMPR TO FUEL TK)
97	Y FRT FOG LP (T96), (EXC SIG & MKR LP (T90) (EXPORT)	12189881	1	301.92	HARNESS, FWD LP WRG
97	Y (EXC FRT FOG LP (T96)	12189883	1	944.44	HARNESS, FWD LP WRG
98	Y FRT FOG LP (T96), (EXC FRT ABS BRAKE LOC (JAG), SIG & MKR LP (T90) (EXPORT)	12163322	1	301.92	HARNESS, FWD LP WRG
98	Y (EXC FRT ABS BRAKE LOC (JAG), FRT FOG LP (T96)	12163324	1	301.92	HARNESS, FWD LP WRG
98	Y FRT ABS BRAKE LOC (JAG), FRT FOG LP (T96), (EXC ACTIVE BRAKE CTL (JL4), SIG & MKR LP (T90) (EXPORT)	12189515	1	301.92	HARNESS, FWD LP WRG
98	Y FRT ABS BRAKE LOC (JAG), (EXC ACTIVE BRAKE CTL (JL4), FRT FOG LP (T96)	12189517	1	301.92	HARNESS, FWD LP WRG
98	Y FRT ABS BRAKE LOC (JAG), ACTIVE BRAKE CTL (JL4), FRT FOG LP (T96), (EXC SIG & MKR LP (T90) (EXPORT)	12189518	1	364.74	HARNESS, FWD LP WRG
98	Y FRT ABS BRAKE LOC (JAG), ACTIVE BRAKE CTL (JL4), (EXC FRT FOG LP (T96)	12189520	1	666.86	HARNESS, FWD LP WRG
99	Y ACTIVE BRAKE CTL (JL4), FRT FOG LP (T96), (EXC SIG & MKR LP (T90) (EXPORT)	12189976	1	290.29	HARNESS, FWD LP WRG
99	Y07–67 FRT FOG LP (T96), (EXC ACTIVE BRAKE CTL (JL4), SIG & MKR LP (T90) (EXPORT)	12189973	1	301.92	HARNESS, FWD LP WRG
99	Y07–67 (EXC ACTIVE BRAKE CTL (JL4), SIG & MKR LP (T90) (EXPORT), FRT FOG LP (T96)	12189974	1	301.92	HARNESS, FWD LP WRG
99	Y07–67 ACTIVE BRAKE CTL (JL4), (EXC SIG & MKR LP (T90) (EXPORT), FRT FOG LP (T96)	12189978	1	300.90	HARNESS, FWD LP WRG
99	Y37 FRT FOG LP (T96), (EXC ACTIVE BRAKE CTL (JL4)	12189973	1	301.92	HARNESS, FWD LP WRG

cardiagn.com

2.480 HARNESS – WIRE, Chassis Wiring(Con't)

99	Y37 P/S (VARIABLE) (NV7), (EXC ACTIVE BRAKE CTL (JL4), FRT FOG LP (T96)	12189974	1	301.92	HARNESS, FWD LP WRG
00	Y ACTIVE BRAKE CTL (JL4), (EXC SIG & MKR LP (T90) (EXPORT)	15329406	1	290.29	HARNESS, FWD LP WRG
00	Y07–67 (EXC ACTIVE BRAKE CTL (JL4), SIG & MKR LP (T90) (EXPORT)	15329403	1	301.92	HARNESS, FWD LP WRG
00	Y37 (EXC ACTIVE BRAKE CTL (JL4)	15329403	1	301.92	HARNESS, FWD LP WRG
01	YY07–67 ACTIVE BRAKE CTL (JL4), (EXC SIG & MKR LP (T90) (EXPORT), (2ND DES)	10310796	1	296.53	HARNESS, FWD LP WRG (2ND DSN USED ON/AFTER VIN #15107689, (1ST DSN 10448116))
01	YY07–67 ACTIVE BRAKE CTL (JL4), SIG & MKR LP (T90) (EXPORT), (2ND DES)	10310798	1	300.90	HARNESS, FWD LP WRG (2ND DSN USED ON/AFTER VIN #15107689, (1ST DSN 10448118))
01	YY07–67 ACTIVE BRAKE CTL (JL4), (EXC SIG & MKR LP (T90) (EXPORT), (1ST DES)	10448116	1	296.53	HARNESS, FWD LP WRG (1ST DSN USED B/4 VIN #15107689, (2ND DSN 10310796))
01	YY07–67 ACTIVE BRAKE CTL (JL4), SIG & MKR LP (T90) (EXPORT), (1ST DES)	10448118	1	300.90	HARNESS, FWD LP WRG (1ST DSN USED B/4 VIN #15107689, (2ND DSN 10310798))
01–02	YY37	10310796	1	296.53	HARNESS, FWD LP WRG
01	YY37	10448116	1	296.53	HARNESS, FWD LP WRG
02	YY07–67 (EXC SIG & MKR LP (T90) (EXPORT)	10310796	1	296.53	HARNESS, FWD LP WRG
97–99	Y (EXC SIG & MKR LP (T90) (EXPORT)	12163711	1	40.09	HARNESS, FWD LP WRG HARN EXTN
00–02	Y (EXC SIG & MKR LP (T90) (EXPORT)	15329462	1	40.09	HARNESS, FWD LP WRG HARN EXTN
97–02	Y	12163776	1	80.84	HARNESS, HAZARD LP & T/SIG LP FLSHR WRG
97	Y 4–SPD A/TRANS (M30), A/C FRT AUTO/AUX CONT (CJ2), (EXC TAIL & S/LP (T89) (EXPORT), CANADIAN (Z49)	12189868	1	1548.75	HARNESS, I/P WRG
97	Y 4–SPD A/TRANS (M30), A/C MAN CONT (C60), (EXC TAIL & S/LP (T89) (EXPORT), CANADIAN (Z49)	12189869	1	1257.59	HARNESS, I/P WRG
97	Y 6–SPD M/TRANS (MM6), A/C FRT AUTO/AUX CONT (CJ2), (EXC TAIL & S/LP (T89) (EXPORT), CANADIAN (Z49)	12189870	1	1257.59	HARNESS, I/P WRG
97	Y 6–SPD M/TRANS (MM6), A/C MAN CONT (C60), (EXC TAIL & S/LP (T89) (EXPORT), CANADIAN (Z49)	12189871	1	1257.59	HARNESS, I/P WRG
97	Y 4–SPD A/TRANS (M30), A/C FRT AUTO/AUX CONT (CJ2), CANADIAN (Z49), (EXC TAIL & S/LP (T89) (EXPORT), SPECIAL TAIL & S/LP (T93)	12189874	1	1257.59	HARNESS, I/P WRG
97	Y 4–SPD A/TRANS (M30), A/C MAN CONT (C60), CANADIAN (Z49), (EXC TAIL & S/LP (T89) (EXPORT), SPECIAL TAIL & S/LP (T93)	12189875	1	1257.59	HARNESS, I/P WRG
97	Y 6–SPD M/TRANS (MM6), A/C FRT AUTO/AUX CONT (CJ2), CANADIAN (Z49), (EXC TAIL & S/LP (T89) (EXPORT), SPECIAL TAIL & S/LP (T93)	12189876	1	1257.59	HARNESS, I/P WRG

cardiagn.com

2.480 HARNESS – WIRE, Chassis Wiring(Con't)

97	Y 6–SPD M/TRANS (MM6), A/C MAN CONT (C60), CANADIAN (Z49), (EXC TAIL & S/LP (T89) (EXPORT), SPECIAL TAIL & S/LP (T93)	12189877	1	1257.59	HARNESS, I/P WRG
98	Y 6–SPD M/TRANS (MM6), A/C MAN CONT (C60), (EXC FRT ABS BRAKE LOC (JAG), TAIL & S/LP (T89) (EXPORT), CANADIAN (Z49)	12189816	1	1257.59	HARNESS, I/P WRG
98	Y07 4–SPD A/TRANS (M30), A/C FRT AUTO/AUX CONT (CJ2), (EXC FRT ABS BRAKE LOC (JAG), TAIL & S/LP (T89) (EXPORT), CANADIAN (Z49)	12189813	1	1257.59	HARNESS, I/P WRG
98	Y07 4–SPD A/TRANS (M30), A/C MAN CONT (C60), (EXC FRT ABS BRAKE LOC (JAG), TAIL & S/LP (T89) (EXPORT), CANADIAN (Z49)	12189814	1	1467.60	HARNESS, I/P WRG
98	Y07 6–SPD M/TRANS (MM6), A/C FRT AUTO/AUX CONT (CJ2), (EXC FRT ABS BRAKE LOC (JAG), TAIL & S/LP (T89) (EXPORT), CANADIAN (Z49)	12189815	1	1595.21	HARNESS, I/P WRG
98	Y07 4–SPD A/TRANS (M30), A/C FRT AUTO/AUX CONT (CJ2), CANADIAN (Z49), (EXC FRT ABS BRAKE LOC (JAG), TAIL & S/LP (T89) (EXPORT), SPECIAL TAIL & S/LP (T93)	12189819	1	1257.59	HARNESS, I/P WRG
98	Y07 4–SPD A/TRANS (M30), A/C MAN CONT (C60), CANADIAN (Z49), (EXC FRT ABS BRAKE LOC (JAG), TAIL & S/LP (T89) (EXPORT), SPECIAL TAIL & S/LP (T93)	12189820	1	1257.59	HARNESS, I/P WRG
98	Y07 6–SPD M/TRANS (MM6), A/C FRT AUTO/AUX CONT (CJ2), CANADIAN (Z49), (EXC FRT ABS BRAKE LOC (JAG), TAIL & S/LP (T89) (EXPORT), SPECIAL TAIL & S/LP (T93)	12189821	1	1257.59	HARNESS, I/P WRG
98	Y07 6–SPD M/TRANS (MM6), A/C MAN CONT (C60), CANADIAN (Z49), (EXC FRT ABS BRAKE LOC (JAG), TAIL & S/LP (T89) (EXPORT), SPECIAL TAIL & S/LP (T93)	12189822	1	1257.59	HARNESS, I/P WRG
98	Y07 4–SPD A/TRANS (M30), A/C FRT AUTO/AUX CONT (CJ2), ACTIVE BRAKE CTL (JL4), FRT ABS BRAKE LOC (JAG), (EXC TAIL & S/LP (T89) (EXPORT), CANADIAN (Z49)	12190400	1	1233.23	HARNESS, I/P WRG (MUST BE USED W/BODY CONT MDL LABELED 9359821 FOR 1998)
98	Y07 4–SPD A/TRANS (M30), A/C MAN CONT (C60), ACTIVE BRAKE CTL (JL4), FRT ABS BRAKE LOC (JAG), (EXC TAIL & S/LP (T89) (EXPORT), CANADIAN (Z49)	12190401	1	1233.23	HARNESS, I/P WRG (MUST BE USED W/BODY CONT MDL LABELED 9359821 FOR 1998)

cardiagn.com

2.480 HARNESS – WIRE, Chassis Wiring(Con't)

98	Y07 6–SPD M/TRANS (MM6), A/C FRT AUTO/AUX CONT (CJ2), ACTIVE BRAKE CTL (JL4), FRT ABS BRAKE LOC (JAG), (EXC TAIL & S/LP (T89) (EXPORT), CANADIAN (Z49)	12190402	1	1233.23	HARNESS, I/P WRG (MUST BE USED W/BODY CONT MDL LABELED 9359821 FOR 1998) .....
98	Y07 6–SPD M/TRANS (MM6), A/C MAN CONT (C60), ACTIVE BRAKE CTL (JL4), FRT ABS BRAKE LOC (JAG), (EXC TAIL & S/LP (T89) (EXPORT), CANADIAN (Z49)	12190403	1	1233.23	HARNESS, I/P WRG (MUST BE USED W/BODY CONT MDL LABELED 9359821 FOR 1998) .....
98	Y07 4–SPD A/TRANS (M30), A/C FRT AUTO/AUX CONT (CJ2), FRT ABS BRAKE LOC (JAG), ACTIVE BRAKE CTL (JL4), CANADIAN (Z49), (EXC TAIL & S/LP (T89) (EXPORT), SPECIAL TAIL & S/LP (T93)	12190406	1	1233.23	HARNESS, I/P WRG (MUST BE USED W/BODY CONT MDL LABELED 9359821 FOR 1998) .....
98	Y07 4–SPD A/TRANS (M30), A/C MAN CONT (C60), FRT ABS BRAKE LOC (JAG), ACTIVE BRAKE CTL (JL4), CANADIAN (Z49), (EXC TAIL & S/LP (T89) (EXPORT), SPECIAL TAIL & S/LP (T93)	12190407	1	1233.23	HARNESS, I/P WRG (MUST BE USED W/BODY CONT MDL LABELED 9359821 FOR 1998) .....
98	Y07 6–SPD M/TRANS (MM6), A/C FRT AUTO/AUX CONT (CJ2), FRT ABS BRAKE LOC (JAG), ACTIVE BRAKE CTL (JL4), CANADIAN (Z49), (EXC TAIL & S/LP (T89) (EXPORT), SPECIAL TAIL & S/LP (T93)	12190408	1	1233.23	HARNESS, I/P WRG (MUST BE USED W/BODY CONT MDL LABELED 9359821 FOR 1998) .....
98	Y07 6–SPD M/TRANS (MM6), A/C MAN CONT (C60), FRT ABS BRAKE LOC (JAG), ACTIVE BRAKE CTL (JL4), CANADIAN (Z49), (EXC TAIL & S/LP (T89) (EXPORT), SPECIAL TAIL & S/LP (T93)	12190409	1	1233.23	HARNESS, I/P WRG (MUST BE USED W/BODY CONT MDL LABELED 9359821 FOR 1998) .....
98	Y07 4–SPD A/TRANS (M30), A/C FRT AUTO/AUX CONT (CJ2), FRT ABS BRAKE LOC (JAG), (EXC ACTIVE BRAKE CTL (JL4), TAIL & S/LP (T89) (EXPORT), CANADIAN (Z49)	12190412	1	1233.23	HARNESS, I/P WRG (MUST BE USED W/BODY CONT MDL LABELED 9359821 FOR 1998) .....
98	Y07 4–SPD A/TRANS (M30), A/C MAN CONT (C60), FRT ABS BRAKE LOC (JAG), (EXC ACTIVE BRAKE CTL (JL4), TAIL & S/LP (T89) (EXPORT), CANADIAN (Z49)	12190413	1	1233.23	HARNESS, I/P WRG (MUST BE USED W/BODY CONT MDL LABELED 9359821 FOR 1998) .....
98	Y07 6–SPD M/TRANS (MM6), A/C FRT AUTO/AUX CONT (CJ2), FRT ABS BRAKE LOC (JAG), (EXC ACTIVE BRAKE CTL (JL4), TAIL & S/LP (T89) (EXPORT), CANADIAN (Z49)	12190414	1	1233.23	HARNESS, I/P WRG (MUST BE USED W/BODY CONT MDL LABELED 9359821 FOR 1998) .....
98	Y07 6–SPD M/TRANS (MM6), A/C MAN CONT (C60), FRT ABS BRAKE LOC (JAG), (EXC ACTIVE BRAKE CTL (JL4), TAIL & S/LP (T89) (EXPORT), CANADIAN (Z49)	12190415	1	1233.23	HARNESS, I/P WRG (MUST BE USED W/BODY CONT MDL LABELED 9359821 FOR 1998) .....

cardiagn.com

2.480 HARNESS – WIRE, Chassis Wiring(Con't)

98	Y07 4-SPD A/TRANS (M30), A/C FRT AUTO/AUX CONT (CJ2), FRT ABS BRAKE LOC (JAG), CANADIAN (Z49), (EXC ACTIVE BRAKE CTL (JL4), TAIL & S/LP (T89) (EXPORT), SPECIAL TAIL & S/LP (T93)	12190418	1	1233.23	HARNESS, I/P WRG (MUST BE USED W/BODY CONT MDL LABELED 9359821 FOR 1998) .....
98	Y07 4-SPD A/TRANS (M30), A/C MAN CONT (C60), FRT ABS BRAKE LOC (JAG), CANADIAN (Z49), (EXC ACTIVE BRAKE CTL (JL4), TAIL & S/LP (T89) (EXPORT), SPECIAL TAIL & S/LP (T93)	12190419	1	1233.23	HARNESS, I/P WRG (MUST BE USED W/BODY CONT MDL LABELED 9359821 FOR 1998) .....
98	Y07 6-SPD M/TRANS (MM6), A/C FRT AUTO/AUX CONT (CJ2), FRT ABS BRAKE LOC (JAG), CANADIAN (Z49), (EXC ACTIVE BRAKE CTL (JL4), TAIL & S/LP (T89) (EXPORT), SPECIAL TAIL & S/LP (T93)	12190420	1	1233.23	HARNESS, I/P WRG (MUST BE USED W/BODY CONT MDL LABELED 9359821 FOR 1998) .....
98	Y07 6-SPD M/TRANS (MM6), A/C MAN CONT (C60), FRT ABS BRAKE LOC (JAG), CANADIAN (Z49), (EXC ACTIVE BRAKE CTL (JL4), TAIL & S/LP (T89) (EXPORT), SPECIAL TAIL & S/LP (T93)	12190421	1	1233.23	HARNESS, I/P WRG (MUST BE USED W/BODY CONT MDL LABELED 9359821 FOR 1998) .....
98	Y67 4-SPD A/TRANS (M30), A/C FRT AUTO/AUX CONT (CJ2), (EXC FRT ABS BRAKE LOC (JAG), TAIL & S/LP (T89) (EXPORT), CANADIAN (Z49)	12189801	1	1257.59	HARNESS, I/P WRG .....
98	Y67 6-SPD M/TRANS (MM6), A/C FRT AUTO/AUX CONT (CJ2), (EXC FRT ABS BRAKE LOC (JAG), TAIL & S/LP (T89) (EXPORT), CANADIAN (Z49)	12189802	1	1257.59	HARNESS, I/P WRG .....
98	Y67 4-SPD A/TRANS (M30), A/C MAN CONT (C60), (EXC FRT ABS BRAKE LOC (JAG), TAIL & S/LP (T89) (EXPORT), CANADIAN (Z49)	12189803	1	1257.59	HARNESS, I/P WRG .....
98	Y67 6-SPD M/TRANS (MM6), A/C MAN CONT (C60), (EXC FRT ABS BRAKE LOC (JAG), TAIL & S/LP (T89) (EXPORT), CANADIAN (Z49)	12189804	1	1257.59	HARNESS, I/P WRG .....
98	Y67 4-SPD A/TRANS (M30), A/C FRT AUTO/AUX CONT (CJ2), CANADIAN (Z49), (EXC FRT ABS BRAKE LOC (JAG), TAIL & S/LP (T89) (EXPORT), SPECIAL TAIL & S/LP (T93)	12189805	1	1257.59	HARNESS, I/P WRG .....
98	Y67 4-SPD A/TRANS (M30), A/C MAN CONT (C60), CANADIAN (Z49), (EXC FRT ABS BRAKE LOC (JAG), TAIL & S/LP (T89) (EXPORT), SPECIAL TAIL & S/LP (T93)	12189806	1	1257.59	HARNESS, I/P WRG .....
98	Y67 6-SPD M/TRANS (MM6), A/C FRT AUTO/AUX CONT (CJ2), CANADIAN (Z49), (EXC FRT ABS BRAKE LOC (JAG), TAIL & S/LP (T89) (EXPORT), SPECIAL TAIL & S/LP (T93)	12189807	1	1257.59	HARNESS, I/P WRG .....

cardiagn.com

2.480 HARNESS – WIRE, Chassis Wiring(Con't)

98	Y67 6–SPD M/TRANS (MM6), A/C MAN CONT (C60), CANADIAN (Z49), (EXC FRT ABS BRAKE LOC (JAG), TAIL & S/LP (T89) (EXPORT), SPECIAL TAIL & S/LP (T93)	12189808	1	1257.59	HARNESS, I/P WRG
98	Y67 4–SPD A/TRANS (M30), A/C FRT AUTO/AUX CONT (CJ2), FRT ABS BRAKE LOC (JAG), (EXC TAIL & S/LP (T89) (EXPORT), CANADIAN (Z49)	12189980	1	1233.23	HARNESS, I/P WRG (MUST BE USED W/BODY CONT MDL LABELED 9359821 FOR 1998)
98	Y67 6–SPD M/TRANS (MM6), A/C FRT AUTO/AUX CONT (CJ2), FRT ABS BRAKE LOC (JAG), (EXC TAIL & S/LP (T89) (EXPORT), CANADIAN (Z49)	12189981	1	1233.23	HARNESS, I/P WRG (MUST BE USED W/BODY CONT MDL LABELED 9359821 FOR 1998)
98	Y67 4–SPD A/TRANS (M30), A/C MAN CONT (C60), FRT ABS BRAKE LOC (JAG), (EXC TAIL & S/LP (T89) (EXPORT), CANADIAN (Z49)	12189982	1	1233.23	HARNESS, I/P WRG (MUST BE USED W/BODY CONT MDL LABELED 9359821 FOR 1998)
98	Y67 6–SPD M/TRANS (MM6), A/C MAN CONT (C60), FRT ABS BRAKE LOC (JAG), (EXC TAIL & S/LP (T89) (EXPORT), CANADIAN (Z49)	12189983	1	1233.23	HARNESS, I/P WRG (MUST BE USED W/BODY CONT MDL LABELED 9359821 FOR 1998)
98	Y67 4–SPD A/TRANS (M30), A/C FRT AUTO/AUX CONT (CJ2), CANADIAN (Z49), FRT ABS BRAKE LOC (JAG), (EXC TAIL & S/LP (T89) (EXPORT)	12189984	1	1233.23	HARNESS, I/P WRG (MUST BE USED W/BODY CONT MDL LABELED 9359821 FOR 1998)
98	Y67 4–SPD A/TRANS (M30), A/C MAN CONT (C60), CANADIAN (Z49), FRT ABS BRAKE LOC (JAG), (EXC TAIL & S/LP (T89) (EXPORT)	12189985	1	1233.23	HARNESS, I/P WRG (MUST BE USED W/BODY CONT MDL LABELED 9359821 FOR 1998)
98	Y67 6–SPD M/TRANS (MM6), A/C FRT AUTO/AUX CONT (CJ2), FRT ABS BRAKE LOC (JAG), CANADIAN (Z49), (EXC TAIL & S/LP (T89) (EXPORT)	12189986	1	1233.23	HARNESS, I/P WRG (MUST BE USED W/BODY CONT MDL LABELED 9359821 FOR 1998)
98	Y67 6–SPD M/TRANS (MM6), A/C MAN CONT (C60), CANADIAN (Z49), FRT ABS BRAKE LOC (JAG), (EXC TAIL & S/LP (T89) (EXPORT)	12189987	1	1233.23	HARNESS, I/P WRG (MUST BE USED W/BODY CONT MDL LABELED 9359821 FOR 1998)
99	Y07 4–SPD A/TRANS (M30), A/C FRT AUTO/AUX CONT (CJ2), ACTIVE BRAKE CTL (JL4), (EXC T&T WHL (N37), TAIL & S/LP (T89) (EXPORT)	12190424	1	1233.23	HARNESS, I/P WRG (MAY REQUIRE 12450028 I/P COMPT LP & 12102616 PWR RCPT CONN)
99–00	Y07 4–SPD A/TRANS (M30), A/C FRT AUTO/AUX CONT (CJ2), ACTIVE BRAKE CTL (JL4), T&T WHL (N37), (EXC TAIL & S/LP (T89) (EXPORT)	12190424	1	1233.23	HARNESS, I/P WRG (MAY REQUIRE 12450028 I/P COMPT LP & 12102616 PWR RCPT CONN)
99–00	Y07 4–SPD A/TRANS (M30), A/C MAN CONT (C60), ACTIVE BRAKE CTL (JL4), (EXC T&T WHL (N37), TAIL & S/LP (T89) (EXPORT)	12190427	1	1233.23	HARNESS, I/P WRG (MAY REQUIRE 12450028 I/P COMPT LP & 12102616 PWR RCPT CONN)

cardiagn.com

2.480 HARNESS – WIRE, Chassis Wiring(Con't)

99	Y07 6–SPD M/TRANS (MM6), A/C FRT AUTO/AUX CONT (CJ2), ACTIVE BRAKE CTL (JL4), T&T WHL (N37), (EXC TAIL & S/LP (T89) (EXPORT)	12190429	1	1233.23	HARNESS, I/P WRG (MAY REQUIRE 12450028 I/P COMPT LP & 12102616 PWR RCPT CONN) .....
99–00	Y07 6–SPD M/TRANS (MM6), A/C MAN CONT (C60), ACTIVE BRAKE CTL (JL4), (EXC T&T WHL (N37), TAIL & S/LP (T89) (EXPORT)	12190432	1	1233.23	HARNESS, I/P WRG (MAY REQUIRE 12450028 I/P COMPT LP & 12102616 PWR RCPT CONN) .....
99–00	Y07 4–SPD A/TRANS (M30), A/C FRT AUTO/AUX CONT (CJ2), T&T WHL (N37), (EXC ACTIVE BRAKE CTL (JL4), TAIL & S/LP (T89) (EXPORT)	12190434	1	1233.23	HARNESS, I/P WRG (MAY REQUIRE 12450028 I/P COMPT LP & 12102616 PWR RCPT CONN) .....
99–00	Y07 4–SPD A/TRANS (M30), A/C MAN CONT (C60), (EXC ACTIVE BRAKE CTL (JL4), T&T WHL (N37), TAIL & S/LP (T89) (EXPORT)	12190437	1	1233.23	HARNESS, I/P WRG (MAY REQUIRE 12450028 I/P COMPT LP & 12102616 PWR RCPT CONN) .....
99–00	Y07 6–SPD M/TRANS (MM6), A/C FRT AUTO/AUX CONT (CJ2), T&T WHL (N37), (EXC ACTIVE BRAKE CTL (JL4), TAIL & S/LP (T89) (EXPORT)	12190439	1	1233.23	HARNESS, I/P WRG (MAY REQUIRE 12450028 I/P COMPT LP & 12102616 PWR RCPT CONN) .....
99–00	Y07 6–SPD M/TRANS (MM6), A/C MAN CONT (C60), (EXC ACTIVE BRAKE CTL (JL4), T&T WHL (N37), TAIL & S/LP (T89) (EXPORT)	12190442	1	1233.23	HARNESS, I/P WRG (MAY REQUIRE 12450028 I/P COMPT LP & 12102616 PWR RCPT CONN) .....
99–00	Y37 4–SPD A/TRANS (M30), 4 SPKR SYS (UQ5), (EXC ACTIVE BRAKE CTL (JL4)	15329320	1	1233.23	HARNESS, I/P WRG (MAY REQUIRE 12450028 I/P COMPT LP & 12102616 PWR RCPT CONN) .....
99–00	Y37 4–SPD A/TRANS (M30), SPEAKER SYSTEM 6 (UZ6), (EXC ACTIVE BRAKE CTL (JL4)	15329321	1	1233.23	HARNESS, I/P WRG (MAY REQUIRE 12450028 I/P COMPT LP & 12102616 PWR RCPT CONN) .....
99–00	Y37 6–SPD M/TRANS (MM6), 4 SPKR SYS (UQ5), (EXC ACTIVE BRAKE CTL (JL4)	15329322	1	1233.23	HARNESS, I/P WRG (MAY REQUIRE 12450028 I/P COMPT LP & 12102616 PWR RCPT CONN) .....
99–00	Y37 6–SPD M/TRANS (MM6), SPEAKER SYSTEM 6 (UZ6), (EXC ACTIVE BRAKE CTL (JL4)	15329323	1	1233.23	HARNESS, I/P WRG (MAY REQUIRE 12450028 I/P COMPT LP & 12102616 PWR RCPT CONN) .....
99	Y37 6–SPD M/TRANS (MM6), A/C MAN CONT (C60), ACTIVE BRAKE CTL (JL4), 4 SPKR SYS (UQ5)	15329332	1	1208.87	HARNESS, I/P WRG .....
99	Y37 6–SPD M/TRANS (MM6), A/C MAN CONT (C60), ACTIVE BRAKE CTL (JL4), SPEAKER SYSTEM 6 (UZ6)	15329333	1	1208.87	HARNESS, I/P WRG .....
99–00	Y67 4–SPD A/TRANS (M30), A/C FRT AUTO/AUX CONT (CJ2), T&T WHL (N37), (EXC TAIL & S/LP (T89) (EXPORT)	12190444	1	1233.23	HARNESS, I/P WRG (MAY REQUIRE 12450028 I/P COMPT LP & 12102616 PWR RCPT CONN) .....
99–00	Y67 4–SPD A/TRANS (M30), A/C MAN CONT (C60), (EXC T&T WHL (N37), TAIL & S/LP (T89) (EXPORT)	12190447	1	1233.23	HARNESS, I/P WRG (MAY REQUIRE 12450028 I/P COMPT LP & 12102616 PWR RCPT CONN) .....
99–00	Y67 6–SPD M/TRANS (MM6), A/C FRT AUTO/AUX CONT (CJ2), T&T WHL (N37), (EXC TAIL & S/LP (T89) (EXPORT)	12190449	1	1233.23	HARNESS, I/P WRG (MAY REQUIRE 12450028 I/P COMPT LP & 12102616 PWR RCPT CONN) .....
99–00	Y67 6–SPD M/TRANS (MM6), A/C MAN CONT (C60), (EXC T&T WHL (N37), TAIL & S/LP (T89) (EXPORT)	12190452	1	1233.23	HARNESS, I/P WRG (MAY REQUIRE 12450028 I/P COMPT LP & 12102616 PWR RCPT CONN) .....

cardiagn.com

2.480 HARNESS – WIRE, Chassis Wiring(Con't)

00	YY07 6–SPD M/TRANS (MM6), A/C FRT AUTO/AUX CONT (CJ2), (EXC ACTIVE BRAKE CTL (JL4), T&T WHL (N37), TAIL & S/LP (T89) (EXPORT)	10442572	1	1233.23	HARNESS, I/P WRG
00	Y07 4–SPD A/TRANS (M30), A/C FRT AUTO/AUX CONT (CJ2), ACTIVE BRAKE CTL (JL4), T&T WHL (N37), (EXC TAIL & S/LP (T89) (EXPORT)	10442559	1	1233.23	HARNESS, I/P WRG (INCLUDES PROVISIONS FOR MAN. SUPPRESSION SYS. INCLUDES HARN. INLINE P/DOOR)
00	Y07 4–SPD A/TRANS (M30), A/C MAN CONT (C60), ACTIVE BRAKE CTL (JL4), (EXC T&T WHL (N37), TAIL & S/LP (T89) (EXPORT)	10442562	1	1233.23	HARNESS, I/P WRG (INCLUDES PROVISIONS FOR MAN. SUPPRESSION SYS. INCLUDES HARN. INLINE P/DOOR)
00	Y07 6–SPD M/TRANS (MM6), A/C FRT AUTO/AUX CONT (CJ2), ACTIVE BRAKE CTL (JL4), (EXC TAIL & S/LP (T89) (EXPORT)	10442563	1	1233.23	HARNESS, I/P WRG (INCLUDES PROVISIONS FOR MAN. SUPPRESSION SYS. INCLUDES HARN. INLINE P/DOOR)
00	Y07 6–SPD M/TRANS (MM6), A/C MAN CONT (C60), ACTIVE BRAKE CTL (JL4), (EXC T&T WHL (N37)	10442566	1	1233.23	HARNESS, I/P WRG (INCLUDES PROVISIONS FOR MAN. SUPPRESSION SYS. INCLUDES HARN.INLINE P/DOOR)
00	Y07 4–SPD A/TRANS (M30), A/C FRT AUTO/AUX CONT (CJ2), (EXC ACTIVE BRAKE CTL (JL4), TAIL & S/LP (T89) (EXPORT)	10442567	1	1233.23	HARNESS, I/P WRG (INCLUDES PROVISIONS FOR MAN. SUPPRESSION SYS. INCLUDES HARN.INLINE P/DOOR)
00	Y07 4–SPD A/TRANS (M30), A/C MAN CONT (C60), (EXC ACTIVE BRAKE CTL (JL4), T&T WHL (N37)	10442570	1	1233.23	HARNESS, I/P WRG (INCLUDES PROVISIONS FOR MAN. SUPPRESSION SYS. INCLUDES HARN.INLINE P/DOOR)
00	Y07 6–SPD M/TRANS (MM6), A/C FRT AUTO/AUX CONT (CJ2), (EXC ACTIVE BRAKE CTL (JL4), TAIL & S/LP (T89) (EXPORT)	10442571	1	1233.23	HARNESS, I/P WRG (INCLUDES PROVISIONS FOR MAN. SUPPRESSION SYS. INCLUDES HARN.INLINE P/DOOR)
00	Y07 6–SPD M/TRANS (MM6), A/C MAN CONT (C60), (EXC ACTIVE BRAKE CTL (JL4), T&T WHL (N37)	10442574	1	1233.23	HARNESS, I/P WRG (INCLUDES PROVISIONS FOR MAN. SUPPRESSION SYS. INCLUDES HARN.INLINE P/DOOR)
00	Y37 4–SPD A/TRANS (M30), A/C FRT AUTO/AUX CONT (CJ2), (EXC T&T WHL (N37), TAIL & S/LP (T89) (EXPORT)	10442575	1	1233.23	HARNESS, I/P WRG (INCLUDES PROVISIONS FOR MAN. SUPPRESSION SYS. INCLUDES HARN.INLINE P/DOOR)
00	Y37 6–SPD M/TRANS (MM6), A/C FRT AUTO/AUX CONT (CJ2), (EXC T&T WHL (N37), TAIL & S/LP (T89) (EXPORT)	10442579	1	1233.23	HARNESS, I/P WRG (INCLUDES PROVISIONS FOR MAN. SUPPRESSION SYS. INCLUDES HARN.INLINE P/DOOR)
00	Y37 6–SPD M/TRANS (MM6), A/C MAN CONT (C60), SPEAKER SYSTEM 6 (UZ6), (EXC ACTIVE BRAKE CTL (JL4)	10442582	1	1233.23	HARNESS, I/P WRG (INCLUDES PROVISIONS FOR MAN. SUPPRESSION SYS. INCLUDES HARN.INLINE P/DOOR)
00	Y37 6–SPD M/TRANS (MM6), A/C MAN CONT (C60), 4 SPKR SYS (UQ5), (EXC ACTIVE BRAKE CTL (JL4)	10442583	1	1233.23	HARNESS, I/P WRG (INCLUDES PROVISIONS FOR MAN. SUPPRESSION SYS. INCLUDES HARN.INLINE P/DOOR)
00	Y37 6–SPD M/TRANS (MM6), A/C MAN CONT (C60), ACTIVE BRAKE CTL (JL4), 4 SPKR SYS (UQ5)	10442585	1	1233.23	HARNESS, I/P WRG (INCLUDES PROVISIONS FOR MAN. SUPPRESSION SYS. INCLUDES HARN.INLINE P/DOOR)
00	Y37 6–SPD M/TRANS (MM6), A/C MAN CONT (C60), ACTIVE BRAKE CTL (JL4), SPEAKER SYSTEM 6 (UZ6)	10442586	1	1233.23	HARNESS, I/P WRG (INCLUDES PROVISIONS FOR MAN. SUPPRESSION SYS. INCLUDES HARN.INLINE P/DOOR)

cardiagn.com

2.480 HARNESS – WIRE, Chassis Wiring(Con't)

00	Y67 4–SPD A/TRANS (M30), A/C FRT AUTO/AUX CONT (CJ2), (EXC TAIL & S/LP (T89) (EXPORT)	10442575	1	1233.23	HARNESS, I/P WRG (INCLUDES PROVISIONS FOR MAN. SUPPRESSION SYS. INCLUDES HARN.INLINE P/DOOR) .....
00	Y67 4–SPD A/TRANS (M30), A/C MAN CONT (C60), (EXC T&T WHL (N37)	10442578	1	1233.23	HARNESS, I/P WRG (INCLUDES PROVISIONS FOR MAN SUPPRESSION SYS. INCLUDES HARN.INLINE P/DOOR) .....
00	Y67 6–SPD M/TRANS (MM6), A/C MAN CONT (C60), (EXC T&T WHL (N37)	10442582	1	1233.23	HARNESS, I/P WRG (INCLUDES PROVISIONS FOR MAN. SUPPRESSION SYS. INCLUDES HARN.INLINE P/DOOR) .....
01–02	YY37 A/C FRT AUTO/AUX CONT (CJ2)	10310789	1	1233.23	HARNESS, I/P WRG .....
01	YY67 6–SPD M/TRANS (MM6), A/C MAN CONT (C60), (EXC T&T WHL (N37), (2ND DES)	10310790	1	1233.23	HARNESS, I/P WRG (2ND DSN USED ON/AFTER VIN #15107689, (1ST DSN 10448106)) .....
01	Y07 4–SPD A/TRANS (M30), A/C FRT AUTO/AUX CONT (CJ2), ACTIVE BRAKE CTL (JL4), (EXC TAIL & S/LP (T89) (EXPORT)	10310779	1	1233.23	HARNESS, I/P WRG .....
01	Y07 4–SPD A/TRANS (M30), A/C MAN CONT (C60), ACTIVE BRAKE CTL (JL4), (EXC T&T WHL (N37), (2ND DES)	10310780	1	1233.23	HARNESS, I/P WRG (2ND DSN USED ON/AFTER VIN #15107689, (1ST DSN 10448088)) .....
01	Y07 6–SPD M/TRANS (MM6), A/C FRT AUTO/AUX CONT (CJ2), ACTIVE BRAKE CTL (JL4), (EXC TAIL & S/LP (T89) (EXPORT), (2ND DES)	10310781	1	1233.23	HARNESS, I/P WRG (2ND DSN USED ON/AFTER VIN #15107689, (1ST DSN 10448089)) .....
01	Y07 6–SPD M/TRANS (MM6), A/C MAN CONT (C60), ACTIVE BRAKE CTL (JL4), (EXC T&T WHL (N37), (2ND DES)	10310782	1	1233.23	HARNESS, I/P WRG (2ND DSN USED ON/AFTER VIN #15107689, (1ST DSN 10448090)) .....
01	Y07 4–SPD A/TRANS (M30), A/C FRT AUTO/AUX CONT (CJ2), ACTIVE BRAKE CTL (JL4), (EXC T&T WHL (N37), TAIL & S/LP (T89) (EXPORT), (1ST DES)	10448087	1	1233.23	HARNESS, I/P WRG (1ST DSN USED B/4 VIN #15107689, (2ND DSN 10310779)) .....
01	Y07 4–SPD A/TRANS (M30), A/C MAN CONT (C60), ACTIVE BRAKE CTL (JL4), (EXC T&T WHL (N37), (1ST DES)	10448088	1	1233.23	HARNESS, I/P WRG (1ST DSN USED B/4 VIN #15107689, (2ND DSN 10310780)) .....
01	Y07 6–SPD M/TRANS (MM6), A/C FRT AUTO/AUX CONT (CJ2), ACTIVE BRAKE CTL (JL4), T&T WHL (N37), (EXC TAIL & S/LP (T89) (EXPORT), (1ST DES)	10448089	1	1233.23	HARNESS, I/P WRG (1ST DSN USED B/4 VIN #15107689, (2ND DSN 10310781)) .....
01	Y07 6–SPD M/TRANS (MM6), A/C MAN CONT (C60), ACTIVE BRAKE CTL (JL4), (EXC T&T WHL (N37), (1ST DES)	10448090	1	1233.23	HARNESS, I/P WRG (1ST DSN USED B/4 VIN #15107689, (2ND DSN 10310782)) .....
01	Y37 A/C FRT AUTO/AUX CONT (CJ2)	10448105	1	1233.23	HARNESS, I/P WRG .....
01	Y67 4–SPD A/TRANS (M30), A/C FRT AUTO/AUX CONT (CJ2), (EXC TAIL & S/LP (T89) (EXPORT), (2ND DES)	10310787	1	1233.23	HARNESS, I/P WRG (2ND DSN USED ON/AFTER VIN #15107689, (1ST DSN 10448103)) .....
01	Y67 4–SPD A/TRANS (M30), A/C MAN CONT (C60), (EXC T&T WHL (N37), (2ND DES)	10310788	1	1233.23	HARNESS, I/P WRG (2ND DSN USED ON/AFTER VIN #15107689, (1ST DSN 10448104)) .....

cardiagn.com

2.480 HARNESS – WIRE, Chassis Wiring(Con't)

01	Y67 6–SPD M/TRANS (MM6), A/C FRT AUTO/AUX CONT (CJ2), (EXC TAIL & S/LP (T89) (EXPORT), (2ND DES)	10310789	1	1233.23	HARNESS, I/P WRG (2ND DSN USED ON/AFTER VIN #15107689, (1ST DSN 10448105))
01	Y67 4–SPD A/TRANS (M30), A/C FRT AUTO/AUX CONT (CJ2), T&T WHL (N37), (EXC TAIL & S/LP (T89) (EXPORT), (1ST DES)	10448103	1	1233.23	HARNESS, I/P WRG (1ST DSN USED B/4 VIN #15107689, (2ND DSN 10310787))
01	Y67 4–SPD A/TRANS (M30), A/C MAN CONT (C60), (EXC T&T WHL (N37), (1ST DES)	10448104	1	1233.23	HARNESS, I/P WRG (1ST DSN USED B/4 VIN #15107689, (2ND DSN 10310788))
01	Y67 6–SPD M/TRANS (MM6), A/C FRT AUTO/AUX CONT (CJ2), T&T WHL (N37), (EXC TAIL & S/LP (T89) (EXPORT), (1ST DES)	10448105	1	1233.23	HARNESS, I/P WRG (1ST DSN USED B/4 VIN #15107689, (2ND DSN 10310789))
01	Y67 6–SPD M/TRANS (MM6), A/C MAN CONT (C60), (EXC T&T WHL (N37), (1ST DES)	10448106	1	1233.23	HARNESS, I/P WRG (1ST DSN USED B/4 VIN #15107689, (2ND DSN 10310790))
02	YY07 4–SPD A/TRANS (M30), A/C FRT AUTO/AUX CONT (CJ2), (EXC TAIL & S/LP (T89) (EXPORT)	10310779	1	1233.23	HARNESS, I/P WRG
02	YY07 4–SPD A/TRANS (M30), A/C MAN CONT (C60), (EXC T&T WHL (N37)	10310780	1	1233.23	HARNESS, I/P WRG
02	YY67 4–SPD A/TRANS (M30), A/C MAN CONT (C60), (EXC T&T WHL (N37)	10310788	1	1233.23	HARNESS, I/P WRG
02	YY67 6–SPD M/TRANS (MM6), A/C MAN CONT (C60), (EXC T&T WHL (N37)	10310790	1	1233.23	HARNESS, I/P WRG
02	Y07 6–SPD M/TRANS (MM6), A/C FRT AUTO/AUX CONT (CJ2), (EXC TAIL & S/LP (T89) (EXPORT)	10310781	1	1233.23	HARNESS, I/P WRG
02	Y07 6–SPD M/TRANS (MM6), A/C MAN CONT (C60), (EXC T&T WHL (N37)	10310782	1	1233.23	HARNESS, I/P WRG
02	Y67 4–SPD A/TRANS (M30), A/C FRT AUTO/AUX CONT (CJ2), (EXC TAIL & S/LP (T89) (EXPORT)	10310787	1	1233.23	HARNESS, I/P WRG
02	Y67 6–SPD M/TRANS (MM6), A/C FRT AUTO/AUX CONT (CJ2), (EXC TAIL & S/LP (T89) (EXPORT)	10310789	1	1233.23	HARNESS, I/P WRG
97	Y 4–SPD A/TRANS (M30), (EXC CHASSIS, REALTIME DAMPING (F45)	12163195	1	375.00	HARNESS, TRANS WRG (AC–DELCO #12163195)
97	Y 6–SPD M/TRANS (MM6), (EXC CHASSIS, REALTIME DAMPING (F45)	12163196	1	375.00	HARNESS, TRANS WRG (AC–DELCO #12163196)
97	Y 4–SPD A/TRANS (M30), CHASSIS, REALTIME DAMPING (F45)	12163705	1	628.00	HARNESS, TRANS WRG (AC–DELCO #12163705)
97	Y 6–SPD M/TRANS (MM6), CHASSIS, REALTIME DAMPING (F45)	12163706	1	628.00	HARNESS, TRANS WRG (AC–DELCO #12163706)
98	Y 4–SPD A/TRANS (M30), (EXC CHASSIS, REALTIME DAMPING (F45), FRT ABS BRAKE LOC (JAG)	12163195	1	375.00	HARNESS, TRANS WRG (AC–DELCO #12163195)

cardiagn.com

2.480 HARNESS – WIRE, Chassis Wiring(Con't)

98	Y 6–SPD M/TRANS (MM6), (EXC CHASSIS, REALTIME DAMPING (F45), FRT ABS BRAKE LOC (JAG), EUROPEAN PROVISIONS (VD1) (EXPORT)	12163196	1	375.00	HARNESS, TRANS WRG (AC–DELCO #12163196)
98	Y 4–SPD A/TRANS (M30), CHASSIS, REALTIME DAMPING (F45), (EXC FRT ABS BRAKE LOC (JAG)	12163705	1	628.00	HARNESS, TRANS WRG (AC–DELCO #12163705)
98	Y 6–SPD M/TRANS (MM6), CHASSIS, REALTIME DAMPING (F45), (EXC FRT ABS BRAKE LOC (JAG), EUROPEAN PROVISIONS (VD1) (EXPORT)	12163706	1	628.00	HARNESS, TRANS WRG (AC–DELCO #12163706)
98	Y 4–SPD A/TRANS (M30), FRT ABS BRAKE LOC (JAG), (EXC CHASSIS, REALTIME DAMPING (F45)	12163790	1	367.43	HARNESS, TRANS WRG
98	Y 6–SPD M/TRANS (MM6), FRT ABS BRAKE LOC (JAG), (EXC CHASSIS, REALTIME DAMPING (F45), EUROPEAN PROVISIONS (VD1) (EXPORT)	12163791	1	367.43	HARNESS, TRANS WRG
98	Y 4–SPD A/TRANS (M30), CHASSIS, REALTIME DAMPING (F45), FRT ABS BRAKE LOC (JAG)	12163792	1	367.43	HARNESS, TRANS WRG
98	Y 6–SPD M/TRANS (MM6), CHASSIS, REALTIME DAMPING (F45), FRT ABS BRAKE LOC (JAG), (EXC EUROPEAN PROVISIONS (VD1) (EXPORT)	12163793	1	367.43	HARNESS, TRANS WRG
99–00	Y 4–SPD A/TRANS (M30), (EXC CHASSIS, REALTIME DAMPING (F45)	12189826	1	248.00	HARNESS, TRANS WRG (AC–DELCO #12189826)
99–00	Y 6–SPD M/TRANS (MM6), (EXC CHASSIS, REALTIME DAMPING (F45), EUROPEAN PROVISIONS (VD1) (EXPORT)	12189827	1	201.00	HARNESS, TRANS WRG (AC–DELCO #12189827)
99–00	Y 4–SPD A/TRANS (M30), CHASSIS, REALTIME DAMPING (F45)	12189828	1	375.00	HARNESS, TRANS WRG (AC–DELCO #12189828)
99–00	Y 6–SPD M/TRANS (MM6), CHASSIS, REALTIME DAMPING (F45), (EXC EUROPEAN PROVISIONS (VD1) (EXPORT)	12189829	1	311.00	HARNESS, TRANS WRG (AC–DELCO #12189829)
01–02	Y 4–SPD A/TRANS (M30), (EXC CHASSIS, REALTIME DAMPING (F45)	10448120	1	248.00	HARNESS, TRANS WRG
01–02	Y 6–SPD M/TRANS (MM6), (EXC CHASSIS, REALTIME DAMPING (F45), EUROPEAN PROVISIONS (VD1) (EXPORT)	10448121	1		HARNESS, TRANS WRG
01–02	Y 4–SPD A/TRANS (M30), CHASSIS, REALTIME DAMPING (F45)	10448122	1		HARNESS, TRANS WRG
01–02	Y 6–SPD M/TRANS (MM6), CHASSIS, REALTIME DAMPING (F45), (EXC EUROPEAN PROVISIONS (VD1) (EXPORT)	10448123	1	311.00	HARNESS, TRANS WRG
01–02	YY37	10448126	1		HARNESS, TRANS WRG
97	Y 5.7G (LS1)	15320349	1	29.84	WIRE, KNOCK SEN

cardiagn.com

2.480 HARNESS – WIRE, Chassis Wiring(Con't)

98	Y 5.7G (LS1), (1ST DES)	15320549	1	29.84	WIRE, KNOCK SEN (USE W/KNOCK SENSOR STAMPED 10456222 & W/INDEX TAB ON CONNECTOR TO SENSOR) (FOR 2ND DES SEE 15320925) .....
98	Y 5.7G (LS1), (2ND DES)	15320925	1	29.84	WIRE, KNOCK SEN (USE W/KNOCK SENSOR STAMPED 10456603 & CONNECTOR W/O INDEX TAB) (FOR 1ST DES SEE 15320549) .....
99–01	Y 5.7G (LS1)	15372170	1	29.84	WIRE, KNOCK SEN .....
01	Y 5.7S (LS6)	15372170	1	29.84	WIRE, KNOCK SEN .....
02	Y 5.7G (LS1)	15372170	1	29.84	WIRE, KNOCK SEN .....
02	Y 5.7S (LS6)	15372170	1	29.84	WIRE, KNOCK SEN .....
	*EXPORT**********EXPORT**********EXPORT**********EXPORT**********EXPORT*				
97	Y EUROPEAN PROVISIONS (VD1) (EXPORT)	12189883	1	944.44	HARNESS, FWD LP WRG .....
97	Y SIG & MKR LP (T90) (EXPORT), VE1 (EXPORT)	12189884	1	295.80	HARNESS, FWD LP WRG .....
99	Y07 - 67 SIG & MKR LP (T90) (EXPORT), (EXC ACTIVE BRAKE CTL (JL4)	12189975	1	301.92	HARNESS, FWD LP WRG .....
99	Y07–67 ACTIVE BRAKE CTL (JL4), SIG & MKR LP (T90) (EXPORT) ...	12189978	1	300.90	HARNESS, FWD LP WRG .....
00	Y07–67 SIG & MKR LP (T90) (EXPORT), (EXC ACTIVE BRAKE CTL (JL4)	15329405	1	301.92	HARNESS, FWD LP WRG .....
00	Y07–67 ACTIVE BRAKE CTL (JL4), SIG & MKR LP (T90) (EXPORT) ...	15329408	1	300.90	HARNESS, FWD LP WRG .....
02	YY07–67 SIG & MKR LP (T90) (EXPORT)	10310798	1	300.90	HARNESS, FWD LP WRG .....
97	Y07 SIG & MKR LP (T90) (EXPORT)	15329463	1	40.09	HARNESS, FWD LP WRG HARN EXTN .
98–99	Y07–67 SIG & MKR LP (T90) (EXPORT)	15329463	1	40.09	HARNESS, FWD LP WRG HARN EXTN .
00–02	Y07–67 SIG & MKR LP (T90) (EXPORT)	15329463	1	40.09	HARNESS, FWD LP WRG HARN EXTN .
97	Y 4–SPD A/TRANS (M30), A/C FRT AUTO/AUX CONT (CJ2), TAIL & S/LP (T89) (EXPORT), (EXC SPECIAL TAIL & S/LP (T93), CANADIAN (Z49)	12189872	1	1257.59	HARNESS, I/P WRG .....
97	Y 6–SPD M/TRANS (MM6), A/C FRT AUTO/AUX CONT (CJ2), TAIL & S/LP (T89) (EXPORT), (EXC SPECIAL TAIL & S/LP (T93), CANADIAN (Z49)	12189873	1	1257.59	HARNESS, I/P WRG .....
97	Y 4--SPD A/TRANS (M30), A/C MAN CONT (C60), TAIL & S/LP (T89) (EXPORT), (EXC SPECIAL TAIL & S/LP (T93), CANADIAN (Z49)	12189878	1		HARNESS, I/P WRG .....
98	Y07 4–SPD A/TRANS (M30), A/C FRT AUTO/AUX CONT (CJ2), TAIL & S/LP (T89) (EXPORT), (EXC FRT ABS BRAKE LOC (JAG), SPECIAL TAIL & S/LP (T93), CANADIAN (Z49)	12189817	1	1257.59	HARNESS, I/P WRG .....
98	Y07 6–SPD M/TRANS (MM6), A/C FRT AUTO/AUX CONT (CJ2), TAIL & S/LP (T89) (EXPORT), (EXC FRT ABS BRAKE LOC (JAG), SPECIAL TAIL & S/LP (T93), CANADIAN (Z49)	12189818	1	1257.59	HARNESS, I/P WRG .....

cardiagn.com

2.480 HARNESS – WIRE, Chassis Wiring(Con't)

98	Y07 4–SPD A/TRANS (M30), A/C MAN CONT (C60), TAIL & S/LP (T89) (EXPORT), (EXC FRT ABS BRAKE LOC (JAG), SPECIAL TAIL & S/LP (T93), CANADIAN (Z49) ...	12189823	1	1257.59	HARNESS, I/P WRG .....
98	Y07 6–SPD M/TRANS (MM6), A/C MAN CONT (C60), TAIL & S/LP (T89) (EXPORT), (EXC FRT ABS BRAKE LOC (JAG), SPECIAL TAIL & S/LP (T93), CANADIAN (Z49) ...	12189824	1	1257.59	HARNESS, I/P WRG .....
98	Y07 4–SPD A/TRANS (M30), A/C FRT AUTO/AUX CONT (CJ2), FRT ABS BRAKE LOC (JAG), ACTIVE BRAKE CTL (JL4), TAIL & S/LP (T89) (EXPORT)	12190404	1	1233.23	HARNESS, I/P WRG (MUST BE USED W/BODY CONT MDL LABELED 9359821 FOR 1998) .....
98	Y07 6–SPD M/TRANS (MM6), A/C FRT AUTO/AUX CONT (CJ2), FRT ABS BRAKE LOC (JAG), ACTIVE BRAKE CTL (JL4), TAIL & S/LP (T89) (EXPORT)	12190405	1	1233.23	HARNESS, I/P WRG (MUST BE USED W/BODY CONT MDL LABELED 9359821 FOR 1998) .....
98	Y07 4–SPD A/TRANS (M30), A/C MAN CONT (C60), FRT ABS BRAKE LOC (JAG), ACTIVE BRAKE CTL (JL4), TAIL & S/LP (T89) (EXPORT)	12190410	1	1233.23	HARNESS, I/P WRG (MUST BE USED W/BODY CONT MDL LABELED 9359821 FOR 1998) .....
98	Y07 6–SPD M/TRANS (MM6), A/C MAN CONT (C60), FRT ABS BRAKE LOC (JAG), ACTIVE BRAKE CTL (JL4), TAIL & S/LP (T89) (EXPORT)	12190411	1	1233.23	HARNESS, I/P WRG (MUST BE USED W/BODY CONT MDL LABELED 9359821 FOR 1998) .....
98	Y07 4–SPD A/TRANS (M30), A/C FRT AUTO/AUX CONT (CJ2), FRT ABS BRAKE LOC (JAG), TAIL & S/LP (T89) (EXPORT), (EXC ACTIVE BRAKE CTL (JL4), SPECIAL TAIL & S/LP (T93), CANADIAN (Z49)	12190416	1	1257.59	HARNESS, I/P WRG (MUST BE USED W/BODY CONT MDL LABELED 9359821 FOR 1998) .....
98	Y07 6–SPD M/TRANS (MM6), A/C FRT AUTO/AUX CONT (CJ2), FRT ABS BRAKE LOC (JAG), TAIL & S/LP (T89) (EXPORT), (EXC ACTIVE BRAKE CTL (JL4), SPECIAL TAIL & S/LP (T93), CANADIAN (Z49)	12190417	1	1257.59	HARNESS, I/P WRG (MUST BE USED W/BODY CONT MDL LABELED 9359821 FOR 1998) .....
98	Y07 4–SPD A/TRANS (M30), A/C MAN CONT (C60), FRT ABS BRAKE LOC (JAG), TAIL & S/LP (T89) (EXPORT), (EXC ACTIVE BRAKE CTL (JL4), SPECIAL TAIL & S/LP (T93), CANADIAN (Z49)	12190422	1	1257.59	HARNESS, I/P WRG (MUST BE USED W/BODY CONT MDL LABELED 9359821 FOR 1998) .....
98	Y07 6–SPD M/TRANS (MM6), A/C MAN CONT (C60), FRT ABS BRAKE LOC (JAG), TAIL & S/LP (T89) (EXPORT), (EXC ACTIVE BRAKE CTL (JL4), SPECIAL TAIL & S/LP (T93), CANADIAN (Z49)	12190423	1	1257.59	HARNESS, I/P WRG (MUST BE USED W/BODY CONT MDL LABELED 9359821 FOR 1998) .....
98	Y67 4–SPD A/TRANS (M30), A/C FRT AUTO/AUX CONT (CJ2), TAIL & S/LP (T89) (EXPORT), (EXC FRT ABS BRAKE LOC (JAG), SPECIAL TAIL & S/LP (T93), CANADIAN (Z49)	12189809	1	1257.59	HARNESS, I/P WRG .....

cardiagn.com

2.480 HARNESS – WIRE, Chassis Wiring(Con't)

98	Y67 4–SPD A/TRANS (M30), A/C MAN CONT (C60), TAIL & S/LP (T89) (EXPORT), (EXC FRT ABS BRAKE LOC (JAG), SPECIAL TAIL & S/LP (T93), CANADIAN (Z49) ...	12189810	1	1257.59	HARNESS, I/P WRG .....
98	Y67 6–SPD M/TRANS (MM6), A/C FRT AUTO/AUX CONT (CJ2), TAIL & S/LP (T89) (EXPORT), (EXC FRT ABS BRAKE LOC (JAG), SPECIAL TAIL & S/LP (T93), CANADIAN (Z49)	12189811	1	1257.59	HARNESS, I/P WRG .....
98	Y67 6–SPD M/TRANS (MM6), A/C MAN CONT (C60), TAIL & S/LP (T89) (EXPORT), (EXC FRT ABS BRAKE LOC (JAG), SPECIAL TAIL & S/LP (T93), CANADIAN (Z49) ...	12189812	1	1257.59	HARNESS, I/P WRG .....
98	Y67 4–SPD A/TRANS (M30), A/C FRT AUTO/AUX CONT (CJ2), FRT ABS BRAKE LOC (JAG), TAIL & S/LP (T89) (EXPORT)	12189988	1	1233.23	HARNESS, I/P WRG (MUST BE USED W/BODY CONT MDL LABELED 9359821 FOR 1998) .....
98	Y67 4–SPD A/TRANS (M30), A/C MAN CONT (C60), FRT ABS BRAKE LOC (JAG), TAIL & S/LP (T89) (EXPORT)	12189989	1	1233.23	HARNESS, I/P WRG (MUST BE USED W/BODY CONT MDL LABELED 9359821 FOR 1998) .....
98	Y67 6–SPD M/TRANS (MM6), A/C FRT AUTO/AUX CONT (CJ2), FRT ABS BRAKE LOC (JAG), TAIL & S/LP (T89) (EXPORT)	12189990	1	1233.23	HARNESS, I/P WRG (MUST BE USED W/BODY CONT MDL LABELED 9359821 FOR 1998) .....
98	Y67 6–SPD M/TRANS (MM6), A/C MAN CONT (C60), FRT ABS BRAKE LOC (JAG), TAIL & S/LP (T89) (EXPORT)	12189991	1	1233.23	HARNESS, I/P WRG (MUST BE USED W/BODY CONT MDL LABELED 9359821 FOR 1998) .....
99–00	Y07 4–SPD A/TRANS (M30), A/C FRT AUTO/AUX CONT (CJ2), ACTIVE BRAKE CTL (JL4), TAIL & S/LP (T89) (EXPORT)	12190426	1	1233.23	HARNESS, I/P WRG (MAY REQUIRE 12450028 I/P COMPT LP & 12102616 PWR RCPT CONN) .....
99–00	Y07 4–SPD A/TRANS (M30), A/C MAN CONT (C60), ACTIVE BRAKE CTL (JL4), TAIL & S/LP (T89) (EXPORT)	12190428	1	1233.23	HARNESS, I/P WRG (MAY REQUIRE 12450028 I/P COMPT LP & 12102616 PWR RCPT CONN) .....
99–00	Y07 6–SPD M/TRANS (MM6), A/C FRT AUTO/AUX CONT (CJ2), ACTIVE BRAKE CTL (JL4), TAIL & S/LP (T89) (EXPORT)	12190431	1	1233.23	HARNESS, I/P WRG (MAY REQUIRE 12450028 I/P COMPT LP & 12102616 PWR RCPT CONN) .....
99–00	Y07 6–SPD M/TRANS (MM6), A/C MAN CONT (C60), ACTIVE BRAKE CTL (JL4), TAIL & S/LP (T89) (EXPORT)	12190433	1	1233.23	HARNESS, I/P WRG (MAY REQUIRE 12450028 I/P COMPT LP & 12102616 PWR RCPT CONN) .....
99–00	Y07 4–SPD A/TRANS (M30), A/C FRT AUTO/AUX CONT (CJ2), TAIL & S/LP (T89) (EXPORT), (EXC ACTIVE BRAKE CTL (JL4)	12190436	1	1257.59	HARNESS, I/P WRG (MAY REQUIRE 12450028 I/P COMPT LP & 12102616 PWR RCPT CONN) .....
99–00	Y07 4–SPD A/TRANS (M30), A/C MAN CONT (C60), TAIL & S/LP (T89) (EXPORT), (EXC ACTIVE BRAKE CTL (JL4)	12190438	1	1257.59	HARNESS, I/P WRG (MAY REQUIRE 12450028 I/P COMPT LP & 12102616 PWR RCPT CONN) .....
99–00	Y07 6–SPD M/TRANS (MM6), A/C FRT AUTO/AUX CONT (CJ2), TAIL & S/LP (T89) (EXPORT), (EXC ACTIVE BRAKE CTL (JL4)	12190441	1	1257.59	HARNESS, I/P WRG (MAY REQUIRE 12450028 I/P COMPT LP & 12102616 PWR RCPT CONN) .....

cardiagn.com

2.480 HARNESS – WIRE, Chassis Wiring(Con't)

99–00	Y07 6–SPD M/TRANS (MM6), A/C MAN CONT (C60), TAIL & S/LP (T89) (EXPORT), (EXC ACTIVE BRAKE CTL (JL4)	12190443	1	1257.59	HARNESS, I/P WRG (MAY REQUIRE 12450028 I/P COMPT LP & 12102616 PWR RCPT CONN)
99–00	Y67 4–SPD A/TRANS (M30), A/C FRT AUTO/AUX CONT (CJ2), TAIL & S/LP (T89) (EXPORT)	12190446	1	1233.23	HARNESS, I/P WRG (MAY REQUIRE 12450028 I/P COMPT LP & 12102616 PWR RCPT CONN)
99–00	Y67 4–SPD A/TRANS (M30), A/C MAN CONT (C60), TAIL & S/LP (T89) (EXPORT)	12190448	1	1233.23	HARNESS, I/P WRG (MAY REQUIRE 12450028 I/P COMPT LP & 12102616 PWR RCPT CONN)
99–00	Y67 6–SPD M/TRANS (MM6), A/C FRT AUTO/AUX CONT (CJ2), TAIL & S/LP (T89) (EXPORT)	12190451	1	1233.23	HARNESS, I/P WRG (MAY REQUIRE 12450028 I/P COMPT LP & 12102616 PWR RCPT CONN)
99–00	Y67 6–SPD M/TRANS (MM6), A/C MAN CONT (C60), TAIL & S/LP (T89) (EXPORT)	12190453	1	1233.23	HARNESS, I/P WRG (MAY REQUIRE 12450028 I/P COMPT LP & 12102616 PWR RCPT CONN)
00	Y07 4–SPD A/TRANS (M30), A/C FRT AUTO/AUX CONT (CJ2), ACTIVE BRAKE CTL (JL4), TAIL & S/LP (T89) (EXPORT)	10442561	1	1233.23	HARNESS, I/P WRG (INCLUDES PROVISIONS FOR MAN. SUPPRESSION SYS. INCLUDES HARN. INLINE P/DOOR)
00	Y07 6–SPD M/TRANS (MM6), A/C FRT AUTO/AUX CONT (CJ2), ACTIVE BRAKE CTL (JL4), TAIL & S/LP (T89) (EXPORT)	10442565	1	1233.23	HARNESS, I/P WRG (INCLUDES PROVISIONS FOR MAN. SUPPRESSION SYS. INCLUDES HARN. INLINE P/DOOR)
00	Y07 4–SPD A/TRANS (M30), A/C FRT AUTO/AUX CONT (CJ2), TAIL & S/LP (T89) (EXPORT), (EXC ACTIVE BRAKE CTL (JL4)	10442569	1	1257.59	HARNESS, I/P WRG (INCLUDES PROVISIONS FOR MAN. SUPPRESSION SYS. INCLUDES HARN.INLINE P/DOOR)
00	Y07 6–SPD M/TRANS (MM6), A/C FRT AUTO/AUX CONT (CJ2), TAIL & S/LP (T89) (EXPORT), (EXC ACTIVE BRAKE CTL (JL4)	10442573	1	1257.53	HARNESS, I/P WRG (INCLUDES PROVISIONS FOR MAN. SUPPRESSION SYS. INCLUDES HARN.INLINE P/DOOR)
00	Y07 4–SPD A/TRANS (M30), A/C MAN CONT (C60), ACTIVE BRAKE CTL (JL4), TAIL & S/LP (T89) (EXPORT)	15329429	1	1233.23	HARNESS, I/P WRG
00	Y07 6–SPD M/TRANS (MM6), A/C MAN CONT (C60), ACTIVE BRAKE CTL (JL4), TAIL & S/LP (T89) (EXPORT)	15329434	1	1233.23	HARNESS, I/P WRG
00	Y07 4–SPD A/TRANS (M30), A/C MAN CONT (C60), TAIL & S/LP (T89) (EXPORT), (EXC ACTIVE BRAKE CTL (JL4)	15329439	1	1257.59	HARNESS, I/P WRG
00	Y07 6–SPD M/TRANS (MM6), A/C MAN CONT (C60), TAIL & S/LP (T89) (EXPORT), (EXC ACTIVE BRAKE CTL (JL4)	15329444	1	1257.59	HARNESS, I/P WRG
00	Y67 4–SPD A/TRANS (M30), A/C FRT AUTO/AUX CONT (CJ2), TAIL & S/LP (T89) (EXPORT)	10442577	1	1233.23	HARNESS, I/P WRG (INCLUDES PROVISIONS FOR MAN. SUPPRESSION SYS. INCLUDES HARN.INLINE P/DOOR)
00	Y67 6–SPD M/TRANS (MM6), A/C FRT AUTO/AUX CONT (CJ2), TAIL & S/LP (T89) (EXPORT)	10442581	1	1233.23	HARNESS, I/P WRG (INCLUDES PROVISIONS FOR MAN. SUPPRESSION SYS. INCLUDES HARN.INLINE P/DOOR)
00	Y67 4–SPD A/TRANS (M30), A/C MAN CONT (C60), TAIL & S/LP (T89) (EXPORT)	15329449	1	1233.23	HARNESS, I/P WRG

cardiagn.com

2.480 HARNESS – WIRE, Chassis Wiring(Con't)

00	Y67 6-SPD M/TRANS (MM6), A/C MAN CONT (C60), TAIL & S/LP (T89) (EXPORT)	15329454	1	1233.23	HARNESS, I/P WRG
01	Y07 4-SPD A/TRANS (M30), A/C FRT AUTO/AUX CONT (CJ2), ACTIVE BRAKE CTL (JL4), TAIL & S/LP (T89) (EXPORT), (2ND DES)	10310783	1	1233.23	HARNESS, I/P WRG (2ND DSN USED ON/AFTER VIN #15107689, (1ST DSN 10448091))
01	Y07 6-SPD M/TRANS (MM6), A/C FRT AUTO/AUX CONT (CJ2), ACTIVE BRAKE CTL (JL4), TAIL & S/LP (T89) (EXPORT), (2ND DES)	10310784	1	1233.23	HARNESS, I/P WRG (2ND DSN USED ON/AFTER VIN #15107689, (1ST DSN 10448092))
01	Y07 4-SPD A/TRANS (M30), A/C FRT AUTO/AUX CONT (CJ2), ACTIVE BRAKE CTL (JL4), TAIL & S/LP (T89) (EXPORT), (1ST DES)	10448091	1	1233.23	HARNESS, I/P WRG (1ST DSN USED B/4 VIN #15107689, (2ND DSN 10310783))
01	Y07 6-SPD M/TRANS (MM6), A/C FRT AUTO/AUX CONT (CJ2), ACTIVE BRAKE CTL (JL4), TAIL & S/LP (T89) (EXPORT), (1ST DES)	10448092	1	1233.23	HARNESS, I/P WRG (1ST DSN USED B/4 VIN #15107689, (2ND DSN 10310784))
01	Y67 4-SPD A/TRANS (M30), A/C FRT AUTO/AUX CONT (CJ2), TAIL & S/LP (T89) (EXPORT), (2ND DES)	10310791	1	1233.23	HARNESS, I/P WRG (2ND DSN USED ON/AFTER VIN #15107689, (1ST DSN 10448107))
01	Y67 6-SPD M/TRANS (MM6), A/C FRT AUTO/AUX CONT (CJ2), TAIL & S/LP (T89) (EXPORT), (2ND DES)	10310792	1	1233.23	HARNESS, I/P WRG (2ND DSN USED ON/AFTER VIN #15107689, (1ST DSN 10448108))
01	Y67 4-SPD A/TRANS (M30), A/C FRT AUTO/AUX CONT (CJ2), TAIL & S/LP (T89) (EXPORT), (1ST DES)	10448107	1	1233.23	HARNESS, I/P WRG (1ST DSN USED B/4 VIN #15107689, (2ND DSN 10310791))
01	Y67 6-SPD M/TRANS (MM6), A/C FRT AUTO/AUX CONT (CJ2), TAIL & S/LP (T89) (EXPORT), (1ST DES)	10448108	1	1233.23	HARNESS, I/P WRG (1ST DSN USED B/4 VIN #15107689, (2ND DSN 10310792))
02	YY67 4-SPD A/TRANS (M30), A/C FRT AUTO/AUX CONT (CJ2), TAIL & S/LP (T89) (EXPORT)	10310791	1	1233.23	HARNESS, I/P WRG
02	YY67 6-SPD M/TRANS (MM6), A/C FRT AUTO/AUX CONT (CJ2), TAIL & S/LP (T89) (EXPORT)	10310792	1	1233.23	HARNESS, I/P WRG
02	Y07 4-SPD A/TRANS (M30), A/C FRT AUTO/AUX CONT (CJ2), TAIL & S/LP (T89) (EXPORT)	10310783	1	1233.23	HARNESS, I/P WRG
02	Y07 6-SPD M/TRANS (MM6), A/C FRT AUTO/AUX CONT (CJ2), TAIL & S/LP (T89) (EXPORT)	10310784	1	1233.23	HARNESS, I/P WRG
98	Y 6-SPD M/TRANS (MM6), CHASSIS, REALTIME DAMPING (F45), EUROPEAN PROVISIONS (VD1) (EXPORT), (EXC FRT ABS BRAKE LOC (JAG)	12189908	1	628.00	HARNESS, TRANS WRG (AC-DELCO #12189908)
98	Y 6-SPD M/TRANS (MM6), EUROPEAN PROVISIONS (VD1) (EXPORT), (EXC CHASSIS, REALTIME DAMPING (F45), FRT ABS BRAKE LOC (JAG)	12189909	1	425.00	HARNESS, TRANS WRG (AC-DELCO #12189909)
98	Y 6-SPD M/TRANS (MM6), CHASSIS, REALTIME DAMPING (F45), FRT ABS BRAKE LOC (JAG), EUROPEAN PROVISIONS (VD1) (EXPORT)	12189912	1	543.43	HARNESS, TRANS WRG

cardiagn.com

2.480 HARNESS – WIRE, Chassis Wiring(Con't)

98	Y 6–SPD M/TRANS (MM6), FRT ABS BRAKE LOC (JAG), EUROPEAN PROVISIONS (VD1) (EXPORT), (EXC CHASSIS, REALTIME DAMPING (F45)	12189913	1	367.44	HARNESS, TRANS WRG .....
99–00	Y 6–SPD M/TRANS (MM6), CHASSIS, REALTIME DAMPING (F45), EUROPEAN PROVISIONS (VD1) (EXPORT)	12189914	1	201.00	HARNESS, TRANS WRG (ENHANCE EVAP) (AC–DELCO #12189914) ....
99–00	Y 6–SPD M/TRANS (MM6), EUROPEAN PROVISIONS (VD1) (EXPORT), (EXC CHASSIS, REALTIME DAMPING (F45)	12189915	1	254.00	HARNESS, TRANS WRG (ENHANCE EVAP) (AC–DELCO #12189915) ....
01–02	Y 6–SPD M/TRANS (MM6), CHASSIS, REALTIME DAMPING (F45), EUROPEAN PROVISIONS (VD1) (EXPORT)	10448124	1		HARNESS, TRANS WRG (ENHANCE EVAP) .....
01–02	Y 6–SPD M/TRANS (MM6), EUROPEAN PROVISIONS (VD1) (EXPORT), (EXC CHASSIS, REALTIME DAMPING (F45)	10448125	1		HARNESS, TRANS WRG (ENHANCE EVAP) .....

2.485 CONNECTOR – MODULE – RELAY – SENSOR – SWITCH, Capsule/Headlamp/Fog Lamp

97	Y	12101875	1	33.66	CONNECTOR, MDL–DAYTIME RUNNING LP CONT (BLUE) (8–WAY F) (W/LEADS) (02.535) (AC–DELCO #PT266) .....
97–98	Y07	15306189	1	42.09	CONNECTOR, MDL–DAYTIME RUNNING LP CONT (BLACK) (8–WAY F W/LEADS, 7–12GA & 4–18GA AS REQ) (02.535) (AC–DELCO #PT1346) ....
98	Y07	12101875	1	33.66	CONNECTOR, MDL–DAYTIME RUNNING LP CONT (BLUE) (8–WAY F) (W/LEADS) (02.535) (AC–DELCO #PT266) .....
01–02	YY67 6–SPD M/TRANS (MM6), A/C MAN CONT (C60), (EXC T&T WHL (N37)	15306189	1	42.09	CONNECTOR, MDL–DAYTIME RUNNING LP CONT (8–WAY FEMALE M/P 280 (W/LEADS) (INSTALL LEADS AS DESIRED) .) (BLACK) (8–WAY F W/LEADS, 7–12GA & 4–18GA AS REQ) (02.535) (AC–DELCO #PT1346) .....
97–02	Y	12102775	1	31.62	CONNECTOR, MDL–HDLP CONT (5–WAY F, W/LEADS) (02.760) (AC–DELCO #PT284) .....
97–02	Y	12102776	1	31.62	CONNECTOR, MDL–HDLP CONT (4–WAY F, W/LEADS) (02.170) (AC–DELCO #PT402) .....
97–00	Y	12085535	1	18.01	CONNECTOR, SEN–DAYTIME RUNNING LP AMB LGT (2–WAY F W/LEADS W/INDEX TAB OTR EDGE OF CAVITY B) (02.535) (AC–DELCO #PT146) .....
97–02	Y	12101874	1	43.35	CONNECTOR, SW–FOG LP (02.535) (AC–DELCO #PT265) ....
02	YY67 4–SPD A/TRANS (M30), A/C FRT AUTO/AUX CONT (CJ2), T&T WHL (N37), (EXC TAIL & S/LP (T89) (EXPORT)	12101874	1	43.35	CONNECTOR, SW–FOG LP (02.535) (AC–DELCO #PT265) .....
97–98	Y CANADIAN (Z49)	10407669	1	81.85	MODULE, HDLP AUTO CONT .....

cardiagn.com

2.485 CONNECTOR – MODULE – RELAY – SENSOR – SWITCH, Capsule/Headlamp/Fog Lamp(Con't)

97–98	Y CANADIAN (Z49)	10261143	1	12.33	SENSOR, DAYTIME RUNNING LP AMB LGT
99–02	Y AUTO HDLP CONT (T82), CANADIAN (Z49)	12450121	1	11.49	SENSOR, DAYTIME RUNNING LP AMB LGT
97–02	Y FRT FOG LP (T96), (EXC EUROPEAN PROVISIONS (VD1) (EXPORT)	12135155	1	43.07	SWITCH, FOG LP (INCLUDES HATCH RELEASE SWITCH)
97–98	Y	26075870	1	213.71	SWITCH, HDLP & T/SIG & CRCONT (W/ LVR) (AC–DELCO #D1512G)
99–02	Y	26075870	1	213.71	SWITCH, HDLP & T/SIG & CRCONT (W/ LVR) (AC–DELCO #D1512G)
	*EXPORT**********EXPORT**********EXPORT**********EXPORT**********EXPORT*				
97–02	Y EUROPEAN PROVISIONS (VD1) (EXPORT)	12135156	1	43.07	SWITCH, FOG LP

2.490 KNOB – RELAY – SWITCH, Instrument Panel/Interior Lamp Switch

97–02	Y	12198636	1	4.50	KNOB, I/P & INTR LP D/SW
97–01	Y	12135149	1	70.7	SWITCH, I/P LP DIMR (AC–DELCO #D1577E)
02	Y (EXC HEAD UP DISPLAY (UV6)	12135149	1	70.7	SWITCH, I/P LP DIMR (AC–DELCO #D1577E)

2.530 CONNECTOR – COVER – INSULATOR – PLUG – SEAL, Chassis Electrical

97–02	Y	15305291	1	1.48	CONNECTOR, GND–BUS BAR (12 WAY F GT–280, W/O UPR CONN/CVR, W/0 LEADS, MATES W/15305292 CONN/CVR) (12–WAY F)
97–02	Y	15305292	1	2.75	CONNECTOR, GND–BUS BAR (MATES WITH AND ACTS AS A CVR FOR 15305291)
97–02	Y	15305294	2	1.48	CONNECTOR, GND–BUS BAR (12–WAY FEMALE BUS BAR. OFTEN USED W/15305300 UPR (COVER) .) (LOWER) (12–WAY FEMALE) (W/O LEADS)
97–02	Y	15305300	2	2.75	CONNECTOR, GND–BUS BAR (USED AS COVER FOR 12–WAY BUS BAR 15305294.) (THIS IS A MALE CAP/BAR WHICH MATES TO 12–WAY FEMALE)
98–02	YY67	12102561	1	11.89	CONNECTOR, GND–BUS BAR (1–WAY F, W/LEADS) (02.535) (AC–DELCO #PT230)
99–00	Y	12167308	2	22.17	CONNECTOR, GND–BUS BAR (80–WAY F) (USE TERM 12084912 18 GA & TERM 12084913 20 GA) (03.670)
01–02	YY07	12167133	1	12.95	CONNECTOR, GND–BUS BAR (1–WAY F) (W/LEADS) (M/P 630 SELF LK) (09.778) (AC–DELCO #PT798)
01–02	YY67 6–WAY PWR P/SEAT ADJR (AG2), SPEAKER SYSTEM 6 (UZ6)	15305294	1	1.48	CONNECTOR, GND–BUS BAR (LOWER) (12–WAY FEMALE) (W/O LEADS)

cardiagn.com

2.530 CONNECTOR – COVER – INSULATOR – PLUG – SEAL, Chassis Electrical(Con't)

02	YY 4–SPD A/TRANS (M30), A/C FRT AUTO/AUX CONT (CJ2), T&T WHL (N37), (EXC TAIL & S/LP (T89) (EXPORT)	15305294	2	1.48	CONNECTOR, GND–BUS BAR (12–WAY FEMALE BUS BAR. OFTEN USED W/15305300 UPR (COVER)) (LOWER) (12–WAY FEMALE) (W/C LEADS)
97	Y CHASSIS, REALTIME DAMPING (F45)	12117025	4	22.50	CONNECTOR, INLINE–TO ELEK SUSP POSN SEN (BLACK) (3–WAY F) (W/LEADS) (02.383) (AC–DELCO #PT420)
98	Y CHASSIS, REALTIME DAMPING (F45), FRT ABS BRAKE LOC (JAG)	12117025	4	22.50	CONNECTOR, INLINE–TO ELEK SUSP POSN SEN (BLACK) (3–WAY F) (W/LEADS) (02.383) (AC–DELCO #PT420)
99–02	Y	12117025	4	22.50	CONNECTOR, INLINE–TO ELEK SUSP POSN SEN (BLACK) (3–WAY F) (W/LEADS) (02.383) (AC–DELCO #PT420)
97–02	Y 5.7G (LS1), 6–SPD M/TRANS (MM6), 4–SPD A/TRANS (M30)	12102490	1	44.37	CONNECTOR, INLINE–TO ENG HARN (7–WAY M, W/LEADS) (AC–DELCO #PT281)
97–98	Y	12125676	1	66.81	CONNECTOR, INLINE–TO ENG HARN (BLACK) (10–WAY F) (W/LEADS) (AC–DELCO #PT588)
97–02	Y 5.7G (LS1), 6–SPD M/TRANS (MM6), 4–SPD A/TRANS (M30)	12160280	1	2.50	CONNECTOR, INLINE–TO ENG HARN (20–WAY F) (W/O LEADS)
98–02	Y	12160542	1	2.50	CONNECTOR, INLINE–TO ENG HARN (20–WAY M, W/O LEADS)
98–00	Y 5.7G (LS1), 6–SPD M/TRANS (MM6), 4–SPD A/TRANS (M30)	12167120	1	24.44	CONNECTOR, INLINE–TO ENG HARN (BLACK) (2–WAY M) (W/LEADS) (04.720) (AC–DELCO #PT786)
01–02	Y 5.7S (LS6)	12102490	1	44.37	CONNECTOR, INLINE–TO ENG HARN (7–WAY M, W/LEADS) (AC–DELCO #PT281)
01–02	Y 5.7G (LS1), 4–SPD A/TRANS (M30), (MN5)	12167120	1	24.44	CONNECTOR, INLINE–TO ENG HARN (BLACK) (2–WAY M) (W/LEADS) (04.720) (AC–DELCO #PT786)
01–02	Y 5.7S (LS6)	12167120	1	24.44	CONNECTOR, INLINE–TO ENG HARN (BLACK) (2–WAY M) (W/LEADS) (04.720) (AC–DELCO #PT786)
01–02	Y 5.7S (LS6), MANUAL 6 SPD O/D TRANS, TREMEC (M12)	12167120	1	24.44	CONNECTOR, INLINE–TO ENG HARN (BLACK) (2–WAY M) (W/LEADS) (04.720) (AC–DELCO #PT786)
02	Y 5.7S (LS6), MANUAL 6 SPD O/D TRANS, TREMEC (M12)	12102490	1	44.37	CONNECTOR, INLINE–TO ENG HARN (7–WAY M, W/LEADS) (AC–DELCO #PT281)
02	YY37	12160280	1	2.50	CONNECTOR, INLINE–TO ENG HARN (20–WAY F) (W/O LEADS)
97–02	Y 5.7G (LS1), 6–SPD M/TRANS (MM6), 4–SPD A/TRANS (M30)	12125676	1	66.81	CONNECTOR, INLINE–TO F/TNK HARN (BLACK) (10–WAY F) (W/LEADS) (AC–DELCO #PT588)
00–02	Y	12117025	RH	22.50	CONNECTOR, INLINE–TO F/TNK HARN (BLACK) (3–WAY F) (W/LEADS) (02.383) (AC–DELCO #PT420)
02	YY37	12101899	1	18.52	CONNECTOR, INLINE–TO F/TNK HARN (BLACK) (2–WAY F W/LEADS) (02.383) (AC–DELCO #PT169)
97–98	Y	12102747	1	21.73	CONNECTOR, INLINE–TO FWD LP HARN (BLACK) (2–WAY F W/LEADS) (03.670) (AC–DELCO #PT374)

cardiagn.com

2.530 CONNECTOR – COVER – INSULATOR – PLUG – SEAL, Chassis Electrical(Con't)

97–02	Y (EXC SIG & MKR LP (T90) (EXPORT)	12117271	1	59.43	CONNECTOR, INLINE–TO FWD LP HARN (WHITE) (8–WAY F W/LEADS) (02.535) (AC–DELCO #PT444)
98–02	Y	12125676	1	66.81	CONNECTOR, INLINE–TO FWD LP HARN (BLACK) (10–WAY F) (W/LEADS) (AC–DELCO #PT588)
98–00	Y	12160280	1	2.50	CONNECTOR, INLINE–TO FWD LP HARN (20–WAY F) (W/O LEADS)
99–00	Y07–67	12102747	1	21.73	CONNECTOR, INLINE–TO FWD LP HARN (BLACK) (2–WAY F W/LEADS) (03.670) (AC–DELCO #PT374)
99–00	Y37 LP GRP (TR9)	12102747	1	21.73	CONNECTOR, INLINE–TO FWD LP HARN (BLACK) (2–WAY F W/LEADS) (03.670) (AC–DELCO #PT374)
00	Y	12085669	1	23.52	CONNECTOR, INLINE–TO FWD LP HARN (1–WAY M) (W/LEAD) (BLACK) (AC–DELCO #PT1223)
01–02	Y	12101899	1	18.52	CONNECTOR, INLINE–TO FWD LP HARN (BLACK) (2–WAY F W/LEADS) (02.383) (AC–DELCO #PT169)
01–02	Y	12102747	1	21.73	CONNECTOR, INLINE–TO FWD LP HARN (BLACK) (2–WAY F W/LEADS) (03.670) (AC–DELCO #PT374)
01–02	Y	15326842	1		CONNECTOR, INLINE–TO FWD LP HARN (10–WAY F) (13.100)
01–02	Y	15326847	1		CONNECTOR, INLINE–TO FWD LP HARN (10–WAY M) (02.483)
01–02	YY67	15306410	1	118.35	CONNECTOR, INLINE–TO FWD LP HARN (16–WAY FEMALE GT–150.) (16 WAY FEMALE) (AC–DELCO #PT1463)
01–02	YY67 4–SPD A/TRANS (M30), A/C FRT AUTO/AUX CONT (CJ2), T&T WHL (N37). (EXC TAIL & S/LP (T89) (EXPORT)	15326286	1	3.33	CONNECTOR, INLINE–TO FWD LP HARN
02	Y 6–SPD M/TRANS (MM6), 4–SPD A/TRANS (M30)	12101899	1	18.52	CONNECTOR, INLINE–TO FWD LP HARN (BLACK) (2–WAY F W/LEADS) (02.383) (AC–DELCO #PT169)
02	YY37	12101899	1	18.52	CONNECTOR, INLINE–TO FWD LP HARN (BLACK) (2–WAY F W/LEADS) (02.383) (AC–DELCO #PT169)
01–02	Y	12102741	4	26.79	CONNECTOR, INLINE–TO HTD OXY SEN (4–WAY F) (W/LEADS, IN A ROW) (04.651) (AC–DELCO #PT368)
97–02	Y	12101762	1	70.38	CONNECTOR, INLINE–TO I/P HARN (10–WAY F W/LEADS) (02.535) (AC–DELCO #PT150)
97–02	Y	12101832	1	46.41	CONNECTOR, INLINE–TO I/P HARN (BLUE) (10–WAY F) (W/LEADS) (AC PT224) (02.535) (AC–DELCO #PT224)
97–02	Y SPEAKER SYSTEM 6 (UZ6), MULTIPLE CD PLYR (U1S)	12102900	1	36.21	CONNECTOR, INLINE–TO I/P HARN (4–WAY F W/LEADS) (02.535) (AC–DELCO #PT382)
97–98	Y	12117270	1	56.37	CONNECTOR, INLINE–TO I/P HARN (8–WAY M W/LEADS) (AC–DELCO #PT443)

cardiagn.com

2.530 CONNECTOR – COVER – INSULATOR – PLUG – SEAL, Chassis Electrical(Con't)

97	Y	12117371	1	25.70	CONNECTOR, INLINE–TO I/P HARN (3–WAY M W/LEADS) (AC–DELCO #PT504)
97–02	Y 6--SPD M/TRANS (MM6), 4–SPD A/TRANS (M30)	12117372	1	72.69	CONNECTOR, INLINE–TO I/P HARN (BLACK) (10–WAY M) (AC–DELCO #PT505)
97–00	Y	12160542	1	2.50	CONNECTOR, INLINE–TO I/P HARN (20–WAY M, W/O LEADS)
97–02	Y	15305888	2	30.36	CONNECTOR, INLINE–TO I/P HARN (6–WAY F W/LEADS) (13.090) (AC–DELCO #PT1032)
99	Y	12101822	1	33.42	CONNECTOR, INLINE–TO I/P HARN (GRAY) (8–WAY F) (W/LEADS) (02.535) (AC–DELCO #PT214)
01–02	Y	15326847	1		CONNECTOR, INLINE–TO I/P HARN (10–WAY M) (02.483)
01–02	YY	15306364	1	132.94	CONNECTOR, INLINE–TO I/P HARN (16–WAY MALE GT150 (W/ LEADS)) (AC–DELCO #PT1416)
02	Y O/S ELEC R/CON MIR (DD0), ELEC R/CON HTD MIR (DL8)	12101832	1	46.41	CONNECTOR, INLINE–TO I/P HARN (BLUE) (10–WAY F) (W/LEADS) (AC PT224) (02.535) (AC–DELCO #PT224)
02	Y O/S ELEC R/CON MIR (DD0), ELEC R/CON HTD MIR (DL8)	15305888	2	30.36	CONNECTOR, INLINE–TO I/P HARN (6–WAY F W/LEADS) (13.090) (AC–DELCO #PT1032)
02	YY37	12117372	1	72.69	CONNECTOR, INLINE–TO I/P HARN (BLACK) (10–WAY M) (AC–DELCO #PT505)
97–00	Y 5.7G (LS1)	12102747	1	21.73	CONNECTOR, INLINE–TO KNOCK SEN (BLACK) (2–WAY F W/LEADS) (03.670) (AC–DELCO #PT374)
01–02	Y	12085495	1	27.30	CONNECTOR, INLINE–TO KNOCK SEN (BLACK) (3–WAY F) (W/LEADS) (02.535) (AC–DELCO #PT117)
97–02	Y	12102747	1	21.73	CONNECTOR, INLINE–TO P/S ASST MOT (BLACK) (2–WAY F W/LEADS) (03.670) (AC–DELCO #PT374)
97–02	Y	12085536	1	29.85	CONNECTOR, INLINE–TO STRG COL HARN (BLACK) (4–WAY M) (W/LEADS) (02.535) (AC–DELCO #PT144)
97–02	Y	12092248	1	1.73	CONNECTOR, INLINE–TO STRG COL HARN (23–WAY M) (W/O LEADS)
97–02	Y	12125678	1	35.19	CONNECTOR, INLINE–TO STRG COL HARN (6–WAY F, W/LEADS) (09.172) (AC–DELCO #PT590)
98–02	Y	12085206	1	16.38	CONNECTOR, INLINE–TO STRG COL HARN (BLACK) (4–WAY M) (02.535)
98–02	Y	15305872	1	33.15	CONNECTOR, INLINE–TO STRG COL HARN (RR) (BLACK) (6–WAY M W/LEADS) (13.100) (AC–DELCO #PT1013)
99–02	Y	12085535	1	18.01	CONNECTOR, INLINE–TO STRG COL HARN (TO TELESCOPING MOTOR) (2–WAY F W/LEADS W/INDEX TAB OTR EDGE OF CAVITY 2) (02.535) (AC–DELCO #PT146)

cardiagn.com

2.530 CONNECTOR – COVER – INSULATOR – PLUG – SEAL, Chassis Electrical(Con't)

99–02	Y07–67	12101864	1	18.16	CONNECTOR, INLINE–TO STRG COL HARN (BLACK) (3–WAY F W/LEADS) (02.535) (AC–DELCO #PT256)
99–02	Y07–67	12117322	1	22.64	CONNECTOR, INLINE–TO STRG COL HARN (3–WAY M) (09.709) (AC–DELCO #PT455)
02	YY67 4–SPD A/TRANS (M30), A/C FRT AUTO/AUX CONT (CJ2), T&T WHL (N37), (EXC TAIL & S/LP (T89) (EXPORT)	12085535	1	18.01	CONNECTOR, INLINE–TO STRG COL HARN (TO TELESCOPING MOTOR) (2–WAY F W/LEADS W/INDEX TAB OTR EDGE OF CAVITY B) (02.535) (AC–DELCO #PT146)
02	YY67 4–SPD A/TRANS (M30), A/C FRT AUTO/AUX CONT (CJ2), T&T WHL (N37), (EXC TAIL & S/LP (T89) (EXPORT)	12085536	1	29.85	CONNECTOR, INLINE–TO STRG COL HARN (BLACK) (4–WAY M) (W/LEADS) (02.535) (AC–DELCO #PT144)
02	YY67 4–SPD A/TRANS (M30), A/C FRT AUTO/AUX CONT (CJ2), T&T WHL (N37), (EXC TAIL & S/LP (T89) (EXPORT)	12092248	1	1.73	CONNECTOR, INLINE–TO STRG COL HARN (23–WAY M) (W/O LEADS)
02	YY67 4–SPD A/TRANS (M30), A/C FRT AUTO/AUX CONT (CJ2), T&T WHL (N37), (EXC TAIL & S/LP (T89) (EXPORT)	12101864	1	18.16	CONNECTOR, INLINE–TO STRG COL HARN (BLACK) (3–WAY F W/LEADS) (02.535) (AC–DELCO #PT256)
02	YY67 4–SPD A/TRANS (M30), A/C FRT AUTO/AUX CONT (CJ2), T&T WHL (N37), (EXC TAIL & S/LP (T89) (EXPORT)	12117322	1	22.64	CONNECTOR, INLINE–TO STRG COL HARN (3–WAY M) (09.709) (AC–DELCO #PT455)
02	YY67	12125676	1	35.19	CONNECTOR, INLINE–TO STRG COL HARN (6–WAY F, W/LEADS) (09.172) (AC–DELCO #PT590)
02	YY67 4–SPD A/TRANS (M30), A/C FRT AUTO/AUX CONT (CJ2), T&T WHL (N37), (EXC TAIL & S/LP (T89) (EXPORT)	15305872	1	33.15	CONNECTOR, INLINE–TO STRG COL HARN (RR) (BLACK) (6–WAY M W/LEADS) (13.100) (AC–DELCO #PT1013)
97–02	Y	12117270	1	56.37	CONNECTOR, INLINE–TO TRANS (8–WAY M W/LEADS) (AC–DELCO #PT443)
97–99	Y	12160493	1	15.30	CONNECTOR, INLINE–TO TRANS (14–WAY F) (W/O LEADS) (M/P 100W) (04.115) (CAN ALSO REPL 13–WAY CONN)
97–02	Y 6–SPD M/TRANS (MM6), 4–SPD A/TRANS (M30)	12160342	1	2.50	CONNECTOR, INLINE–TO TRANS (20–WAY M, W/O LEADS)
97	Y 4–SPD A/TRANS (M30)	12160782	1	5.61	CONNECTOR, INLINE–TO TRANS (20–WAY M)
97–01	Y	15305857	1	78.54	CONNECTOR, INLINE–TO TRANS (14–WAY F) (W/LEADS) (ACTUALLY 20–WAY W/6 CAVITIES MOLDED) (AC–DELCO #PT1008)
98–99	Y	12085485	1	18.67	CONNECTOR, INLINE–TO TRANS (BLACK) (2–WAY M) (W/LEADS) (02.535) (AC–DELCO #PT107)
98	Y67	12160280	2	2.50	CONNECTOR, INLINE–TO TRANS (20–WAY F) (W/O LEADS)
99–02	Y	12117372	1	72.69	CONNECTOR, INLINE–TO TRANS (BLACK) (10–WAY M) (AC–DELCO #PT505)
99–00	Y	12125676	1	66.61	CONNECTOR, INLINE–TO TRANS (BLACK) (10–WAY F) (W/LEADS) (AC–DELCO #PT688)

cardiagn.com

2.530 CONNECTOR – COVER – INSULATOR – PLUG – SEAL, Chassis Electrical(Con't)

97–00	Y	12117372	1	72.69	CONNECTOR, INLINE–TO TRANS HARN (BLACK) (10–WAY M) (AC–DELCO #PT505)
97–00	Y	12125675	1	69.87	CONNECTOR, INLINE–TO TRANS HARN (GRAY) (10–WAY F) (W/LEADS) (AC–DELCO #PT587)
97–98	Y	12160280	1	2.50	CONNECTOR, INLINE–TO TRANS HARN (20–WAY F) (W/O LEADS)
97–98	Y	12162343	2	.58	CONNECTOR, INLINE–TO TRANS HARN (2–WAY M W/O LEADS) (04.720)
98	Y	12125676	1	66.81	CONNECTOR, INLINE–TO TRANS HARN (BLACK) (10–WAY F) (W/LEADS) (AC–DELCO #PT588)
98	Y	12160542	1	2.50	CONNECTOR, INLINE–TO TRANS HARN (20–WAY M, W/O LEADS)
99–02	Y	12162343	1	.58	CONNECTOR, INLINE–TO TRANS HARN (2–WAY M W/O LEADS) (04.720)
01–02	YY	15326842	1		CONNECTOR, INLINE–TO TRANS HARN (10–WAY F) (13.100)
01–02	YY07–67	15326847	1		CONNECTOR, INLINE–TO TRANS HARN (10–WAY M) (02.483)
97–99	Y	12177205	1	5.71	CONNECTOR, PWR DISTR BLK (68–WAY F, M/P 280 FLXLK, W/O LEADS, GRAY)
97–98	Y	12177206	1	5.71	CONNECTOR, PWR DISTR BLK (RR) (BLACK) (68–WAY F, M/P 280 FLXLK, W/O LEADS)
97–98	Y	12177207	1	5.71	CONNECTOR, PWR DISTR BLK (GRAY) (68–WAY F, M/P 280 FLXLK, W/O LEADS)
97–02	Y	15303512	1	5.53	CONNECTOR, PWR DISTR BLK (GRAY) (68–WAY F W/O LEADS)
97–99	Y	15303513	1	5.53	CONNECTOR, PWR DISTR BLK (FRT) (BLACK) (68–WAY F M/P 280 FLXLK W/O LEADS)
97–98	Y	15303514	1	5.53	CONNECTOR, PWR DISTR BLK (BROWN) (68–WAY F, M/P 280 FLYLK, W/O LEADS)
97–98	Y	15305880	1	20.91	CONNECTOR, PWR DISTR BLK (GRAY) (2–WAY F MAXI FUSE CONN W/LEADS) (AC–DELCO #PT1028)
97–99	Y	15305920	1	33.42	CONNECTOR, PWR DISTR BLK (GREEN) (2–WAY F W/LEADS) (AC–DELCO #PT1169)
98	Y	15305928	1	33.42	CONNECTOR, PWR DISTR BLK (BLACK) (2–WAY F, MAXI FUSE, W/LEADS) (AC–DELCO #PT1187)
98–99	Y	15305951	1	20.91	CONNECTOR, PWR DISTR BLK (2–WAY F MAXI FUSE W/LEADS) (AC–DELCO #PT1190)
01–02	Y	12177205	1	5.71	CONNECTOR, PWR DISTR BLK (68–WAY F, M/P 280 FLXLK, W/O LEADS GRAY)
01–02	Y	15303513	1	5.53	CONNECTOR, PWR DISTR BLK (FRT) (BLACK) (68–WAY F M/P 280 FLXLK W/O LEADS)

cardiagn.com

2.530 CONNECTOR – COVER – INSULATOR – PLUG – SEAL, Chassis Electrical(Con't)

01–02	YY	15328719	1	5.53	CONNECTOR, PWR DISTR BLK (68–WAY FEMALE M/P 280 FLXLK T3 (W/O LEADS) .) (GRAY) (68–WAY FEMALE M/P 280 FLXLK T3 W/O LEADS) (13.100)
01–02	YY67	12177206	1	5.71	CONNECTOR, PWR DISTR BLK (68–WAY FEMALE M/P 280 FLXLK (W/O LEADS) (BLACK) .) (BLACK) (68–WAY F, M/P 280 FLXLK, W/O LEADS)
01–02	YY67	12177207	1	5.71	CONNECTOR, PWR DISTR BLK (68–WAY FEMALE M/P 280 FLXLK (W/O LEADS) (GRAY) .) (GRAY) (68–WAY F, M/P 280 FLXLK, W/O LEADS)
01–02	YY67	15305886	1	20.91	CONNECTOR, PWR DISTR BLK (2–WAY FEMALE MAX 1 FUSE CONN (W/LEADS) GRAY.) (GRAY) (2–WAY F MAXI FUSE CONN W/LEADS) (AC–DELCO #PT1028)
01–02	YY67	15305920	1	33.42	CONNECTOR, PWR DISTR BLK (2–WAY FEMALE MAX 1 FUSE CONN (W/LEADS) .) (GREEN) (2–WAY F W/LEADS) (AC–DELCO #PT1169)
01–02	YY67	15305951	1	20.91	CONNECTOR, PWR DISTR BLK (2–WAY FEMALE MAX1–FUSE CONNECTOR (W/LEADS)) (2–WAY F MAXI FUSE W/LEADS) (AC–DELCO #PT1180)
97	Y 4–SPD A/TRANS (M30)	12162201	1	.58	CONNECTOR, SOL–A SHFT VLV (NATURAL) (2–WAY F) (W/O LEADS)
99–02	Y	12101867	1	19.28	CONNECTOR, SOL–A SHFT VLV (WHITE) (2–WAY F, W/LEADS) (02.535) (AC–DELCO #PT249)
97–02	Y	15305291	1	1.48	CONNECTOR, WRG HARN (12 WAY F GT–280, W/O UPR CONN/CVR, W/O LEADS, MATES W/15305292 CONN/CVR) (12–WAY F)
97–02	YY67	15305914	1	60.96	CONNECTOR, WRG HARN (12–WAY FEMALE GT 150 (W/LEADS) .) (12–WAY F) (W/LEADS AND CAP) (02.440) (AC–DELCO #PT1101)
01–02	Y	15305292	1	2.75	CONNECTOR, WRG HARN
02	YY67 4–SPD A/TRANS (M30), A/C FRT AUTO/AUX CONT (CJ2), T&T WHL (N37), (EXC TAIL & S/LP (T89) (EXPORT)	15305292	1	2.75	CONNECTOR, WRG HARN (ACTS AS A COVER FOR MATING PART 15305291)
02	YY67 4–SPD A/TRANS (M30), A/C FRT AUTO/AUX CONT (CJ2), T&T WHL (N37), (EXC TAIL & S/LP (T89) (EXPORT)	15305914	1	60.96	CONNECTOR, WRG HARN (12 WAY FEMALE GT 150 (W/LEADS)) (12 WAY F) (W/LEADS AND CAP) (02.440) (AC DELCO #PT1101)
	*EXPORT*********EXPORT*********EXPORT*********EXPORT*********EXPORT*				
02	YY67 67 SIG & MKR LP (T90) (EXPORT)	12117271	1	59.43	CONNECTOR, INLINE 10 LWD LP HARN (WHITE) (8 WAY F W/LEADS) (02.535) (AC DELCO #PT444)

cardiagn.com

2.530 CONNECTOR – COVER – INSULATOR – PLUG – SEAL, Chassis Electrical(Con't)

99	Y 6–SPD M/TRANS (MM6), EUROPEAN PROVISIONS (VD1) (EXPORT)	12160542	1	2.50	CONNECTOR, INLINE–TO TRANS HARN (20–WAY M, W/O LEADS) ....
99	Y 6–SPD M/TRANS (MM6), CHASSIS, REALTIME DAMPING (F45), EUROPEAN PROVISIONS (VD1) (EXPORT)	15305928	1	33.42	CONNECTOR, PWR DISTR BLK (BLACK) (2–WAY F, MAXI FUSE, W/LEADS) (AC–DELCO #PT1187) ...

2.575 CONNECTOR – LAMP – PUSHBUTTON – SOCKET – SWITCH, Side Marker and Hazard Flasher

97–02	Y	12101762	1	70.38	CONNECTOR, SW–HAZARD WRNG (10–WAY F W/LEADS) (02.535) (AC–DELCO #PT150) .....
97–02	Y	12101823	1	50.49	CONNECTOR, SW–HAZARD WRNG (10–WAY M W/LEADS) (02.535) (AC–DELCO #PT215) .....
02	YY67	12101823	1	50.49	CONNECTOR, SW–HAZARD WRNG (10–WAY M W/LEADS) (02.535) (AC–DELCO #PT215) .....
97–02	Y	10295550	1	3.45	PUSHBUTTON, HAZARD WRNG SW ...
97–02	Y (EXC EUROPEAN PROVISIONS (VD1) (EXPORT)	10406626	1	28.75	SWITCH, HAZARD WRNG .....
	*EXPORT**************EXPORT**************EXPORT**************EXPORT**************EXPORT*				
97–02	Y EUROPEAN PROVISIONS (VD1) (EXPORT)	10406627	1	28.75	SWITCH, HAZARD WRNG .....

3.028 CAP – CONNECTOR – HOLDER – SWITCH, Fuel Tank Filler

97–02	Y	12167129	1	30.60	CONNECTOR, SW–F/TNK FIL DR LK REL (5–WAY FEMALE M/P 280 (W/LEADS)) (BLACK) (5–WAY F) (W/LEADS) (M/P 280) (10.525) (AC–DELCO #PT795) .....
97–02	Y (EXC EUROPEAN PROVISIONS (VD1) (EXPORT)	10276017	1	9.31	SWITCH, F/TNK FIL DR LK REL .....
	*EXPORT**************EXPORT**************EXPORT**************EXPORT**************EXPORT*				
00–02	Y EUROPEAN PROVISIONS (VD1) (EXPORT)	10280087	1	66.10	SWITCH, R/CMPT LID & FUEL FIL DR REL (12 243) (AC DELCO #D7007C)

4.710 BOLT – BRACKET – CONNECTOR – SENSOR – SWITCH, Electronic Brake Control

Note. AT TIMES THE BRAKE SENSOR IS SERVICED ONLY AS PART OF THE REAR WHEEL HUB ASSEMBLY LOCATED IN GROUP 6.808

98–00	Y	12102740	1	23.03	CONNECTOR, SEN–BRK PRESS MOD VLV PRESS (BLACK) (3–WAY F) (W/LEADS) (02 536) (AC DELCO #PT376)
98	Y07 67 FRT ABS BRAKE LOC (JA3)	12102748	1	23.03	CONNECTOR, SEN BRK PRESS MOD VLV PRESS (BLACK) (3–WAY F) (W/LEADS) (02 536) (AC DELCO #PT376)
98–02	Y	12146121	1	1.88	CONNECTOR SEN VEH LATL (3–WAY F) (02 170)
02	Y 4 SPD A/TRANS (M30), A/C FRT AUTO/AUX CONT (CJ2), T&T WHL (NJ7) (EXC TAIL & STOP (T80) (EXPORT)	12146121	1	1.88	CONNECTOR, SEN VEH LATL (3–WAY F) (02 170)
97–02	Y	12102632	1	21.03	CONNECTOR, SW ELEK TRACT CONT (BLACK) (6–WAY F) (W/LEADS) (00 668) (AC DELCO #PT310)

cardiagn.com

4.710 BOLT – BRACKET – CONNECTOR – SENSOR – SWITCH, Electronic Brake Control(Con't)

02	YY67 4-SPD A/TRANS (M30), A/C FRT AUTO/AUX CONT (CJ2), T&T WHL (N37), (EXC TAIL & S/LP (T89) (EXPORT)	12102632	1	21.83	CONNECTOR, SW-ELEK TRACT CONT (BLACK) (6-WAY F) (W/LEADS) (09.656) (AC-DELCO #PT319)
97-02	Y	11516210	1	21.90	SWITCH, ELEK BRK CONT BRK PED (W/ S/LP SW)
97	Y (EXC CHASSIS, REALTIME DAMPING (F45)	12135154	1	42.00	SWITCH, ELEK TRAC CONT (W/ASR, W/O RTD)
98-99	Y (EXC CHASSIS, REALTIME DAMPING (F45), ACTIVE BRAKE CTL (JL4)	12135154	1	42.00	SWITCH, ELEK TRAC CONT
98-99	Y ACTIVE BRAKE CTL (JL4), (EXC CHASSIS, REALTIME DAMPING (F45)	12198726	1	42.00	SWITCH, ELEK TRAC CONT
00	Y (C88), (EXC CHASSIS, REALTIME DAMPING (F45), ACTIVE BRAKE CTL (JL4)	10440629	1	67.50	SWITCH, ELEK TRAC CONT
00	Y ACTIVE BRAKE CTL (JL4), (EXC C88), CHASSIS, REALTIME DAMPING (F45)	10440631	1		SWITCH, ELEK TRAC CONT
00	Y (EXC C88), CHASSIS, REALTIME DAMPING (F45), ACTIVE BRAKE CTL (JL4)	12135154	1	42.00	SWITCH, ELEK TRAC CONT
01	Y07-07 ACTIVE BRAKE CTL (JL4), (EXC C88), CHASSIS, REALTIME DAMPING (F45)	10440631	1		SWITCH, ELEK TRAC CONT
01	Y37 (EXC C88)	10440631	1		SWITCH, ELEK TRAC CONT
02	Y (EXC C88), CHASSIS, REALTIME DAMPING (F45)	10440631	1		SWITCH, ELEK TRAC CONT
	*EXPORT*****EXPORT*****EXPORT*****EXPORT*****EXPORT*				
00-01	Y07-07 ACTIVE BRAKE CTL (JL4), (EXC CHASSIS, REALTIME DAMPING (F45), (C88)	12198726	1	42.00	SWITCH, ELEK TRAC CONT
02	Y (EXC CHASSIS, REALTIME DAMPING (F45), (C88)	12198726	1	42.00	SWITCH, ELEK TRAC CONT

7.440 ACCELEROMETER – BRACKET – CONNECTOR – SENSOR, Hydraulic Suspension

98-99	Y ACTIVE BRAKE CTL (JL4)	25070101	1	110.00	ACCELEROMETER, VEH LATL
00-01	Y ACTIVE BRAKE CTL (JL4)	25007700	1	110.00	ACCELEROMETER, VEH LATL
02	Y	25007700	1	110.00	ACCELEROMETER VEH LATL
98-02	Y ACTIVE BRAKE CTL (JL4)	10200470	1	3.40	BRACKET, VEH LATL ACCLRM
99-02	Y	12117320	1	28.03	CONNECTOR, SEN VEH YAW (3 WAY F) (W/LEADS) (02 630) (AC-DELCO #PT1490)
02	YY67 4 SPD A/TRANS (M30), A/C FRT AUTO/AUX CONT (CJ2), T&T WHL (N37), (EXC TAIL & S/LP (T89) (EXPORT)	12117320	1	28.03	CONNECTOR, SEN VEH YAW (3 WAY F) (W/LEADS) (02 630) (AC DELCO #PT1490)
98-00	Y ACTIVE BRAKE CTL (JL4)	10277333	1	297.00	SENSOR VEH YAW
01-02	Y	10277333	1	297.00	SENSOR VEH YAW

7.475 BRACKET – CONNECTOR – SENSOR, Air Suspension Leveling Or Level Control

97-02	Y CHASSIS, REALTIME DAMPING (F45)	10291313	LH	3.40	BRACKET ELEK SUSP FRT POSN SEN LEAD (BLACK)
97-02	Y CHASSIS REALTIME DAMPING (F45)	10291314	RH	3.40	BRACKET ELEK SUSP FRT POSN SEN LEAD (BLACK)

cardiagn.com

7.475 BRACKET – CONNECTOR – SENSOR, Air Suspension Levelling Or Level Control(Con't)

97–02	Y CHASSIS, REALTIME DAMPING (F45)	10289511	2	3.40	BRACKET, ELEK SUSP RR POSN SEN LEAD (QTY 1 LH SEN, QTY 1 RH SEN)
98–99	Y	12117320	1	25.03	CONNECTOR, SEN–VEH YAW & LAT ACCLRM (3–WAY F) (W/LEADS) (02 530) (AC–DELCO #PT1490)
97–02	Y CHASSIS, REALTIME DAMPING (F45)	22153635	LH	262.00	SENSOR, ELEK SUSP FRT POSN (W/FRT VERT ACCLRM)
97–02	Y CHASSIS, REALTIME DAMPING (F45)	22153636	RH	262.00	SENSOR, ELEK SUSP FRT POSN (W/FRT VERT ACCLRM)
97–02	Y CHASSIS, REALTIME DAMPING (F45)	22153637	LH	262.00	SENSOR, ELEK SUSP RR POSN (W/RR VERT ACCLRM)
97–02	Y CHASSIS, REALTIME DAMPING (F45)	22153638	RH	262.00	SENSOR, ELEK SUSP RR POSN (W/RR VERT ACCLRM)

8.000 HOOD, Panel

97–02	Y	10246445	1	703.00	HOOD, (TRADITIONAL HD & FRT HGED)

8.141 REINFORCEMENT – RETAINER, Front Fender

98–02	Y	10412533	2	3.45	RETAINER, F/FDR UPR (TO DR EDGE)

8.155 BRACKET – PLATE, Fender Wheelhouse

97–02	Y	10409685	1	3.95	BRACKET, FRT W/H PNL
97–02	Y	10404603	2	1.70	PLATE, FRT W/H PNL BRKT STUD (04.785)

8.808 FLASHLIGHT – LABEL – TAG, Emission, Cautionary and Informative

02	Y ARABIC LANGUAGE LABEL (VBX)	16053409	1	0.25	LABEL, A/C REFRIG & BAT & FAN BLADE & RAD FIL CAP CAUTION
01–02	Y07–07 ARABIC LANGUAGE LABEL (VBX)	16740300	1	0.25	LABEL, BAT CAUTION
97–98	Y F/BEAT INFL RST SYS (AK8), MAN RST SYS (AX4) (EXPORT)	10420427	1	0.25	LABEL, CHILD ST LOCATION
97	Y	12556099	1	N.L.	LABEL, DRIVETRAIN REMOVAL NTC
98–99	Y 6 SPD M/TRANS (MM6)	12556300	1	N.L.	LABEL DRIVETRAIN REMOVAL NTC
00	Y 6–SPD M/TRANS (MM6), 4 –SPD A/TRANS (M30)	12556600	1	N.L.	LABEL, DRIVETRAIN REMOVAL NTC
01–02	Y 6 SPD M/TRANS (MM6), MANUAL 6 SPD O/D TRANS, TREMEC (M12), 4 SPD A/TRANS (M30)	12556699	1	N.L.	LABEL, DRIVETRAIN REMOVAL NTC
97–98	Y	10202511	1	0.25	LABEL, FAN BLADE & INFL RST & ENG CLG & A/C REFRIG CAUTION
99	Y (1ST DES)	10202511	1	0.25	LABEL, FAN BLADE & INFL RST & ENG CLG & A/C REFRIG CAUTION (1ST DES VEH W/ EVAP TUBE ORIFICE ON AIR TUBE, 2ND DES BLE 10432250)
00	Y (2ND DES)	10432250	1	0.25	LABEL, FAN BLADE & INFL RST & ENG CLG & A/C REFRIG CAUTION (2ND DES VEH W/ EVAP TUBE ORIFICE ON AIR TUBE, 1ST DES BEI 10202511)
00	Y	10432250	1	0.25	LABEL, FAN BLADE & INFL RST & ENG CLG & A/C REFRIG CAUTION (EVAP TUBE ORIFICE ON AIR TUBE)

cardiagn.com

8.808 FLASHLIGHT – LABEL – TAG, Emission, Cautionary and Informative(Con't)

01–02	Y	10308343	1	9.25	LABEL, FAN BLADE & INFL RST & ENG CLG & A/C REFRIG CAUTION (EVAP TUBE ORIFICE ON FRT TUBE)
97–02	Y	10299631	1	9.25	LABEL, I/P PASS KNEE BOLS PNL IDENT
97	Y	15001737	2	9.25	LABEL, INFL RST SYS CAUTION (140.0X40.0)
98–00	Y07–67 CANADIAN (Z49)	10408963	2	9.25	LABEL, INFL RST SYS CAUTION (130.0X65.0)
98–99	Y07–67 (EXC CANADIAN (Z49)	15001737	2	9.25	LABEL, INFL RST SYS CAUTION (140.0X40.0)
99–00	Y37 CANADIAN (Z49)	10408963	2	9.25	LABEL, INFL RST SYS CAUTION (130.0X65.0)
99	Y37 (EXC CANADIAN (Z49)	15001737	2	9.25	LABEL, INFL RST SYS CAUTION (140.0X40.0)
00–02	Y (C88), (EXC CANADIAN (Z49)	15002610	2	9.25	LABEL, INFL RST SYS CAUTION
98	Y F/SEAT INFL RST SYS (AK5)	15012288	1	9.25	LABEL, INFL RST SYS INFO (NEXT GENERATION AIR BAG)
97–02	Y F/SEAT INFL RST SYS (AK5)	26017956	1	9.25	LABEL, INFL RST SYS SERV NTC
00–02	Y	15766394	1	9.25	LABEL, MERCURY DISPOSAL NTC
97–02	Y	10443718	AR	9.25	LABEL, ODOM SERV NTC (ENGLISH AND FRENCH)
01–02	YY37	09594076	1	9.25	LABEL, TIRE MAX SPD CAUTION
97	Y 5.7G (L31), FED EMIS SYS (NF2), (EXC POWERTRAIN CONT MODULE (K20), LEADED FUEL EMIS EXPORT (NM8), CANADIAN (Z49)	12558627	1	9.25	LABEL, VEH EMIS CONT INFO (AKB)
97	Y 5.7G (L31), CALIF EMIS, TIER 1 (NB6)	12558628	1	9.25	LABEL, VEH EMIS CONT INFO (AKC)
97	Y 5.7G (L31) FED EMIS SYS (NF2), CANADIAN (Z49), (EXC LEADED FUEL EMIS EXPORT (NM8)	12558629	1	9.25	LABEL, VEH EMIS CONT INFO (AKD)
98	Y 5.7G (L31), FED EMIS SYS (NF2), (EXC LEADED FUEL EMIS EXPORT (NM8), EMIS OVERRIDE (NN5), POWERTRAIN CONT MODULE (K20)	12559752	1	9.25	LABEL, VEH EMIS CONT INFO (FJU)
99	Y 5.7G (L31), FED EMIS SYS (NF2), (EXC POWERTRAIN CONT MODULE (K20)	12560553	1	9.25	LABEL, VEH EMIS CONT INFO (LAC)
99	Y 5.7G (L31), CALIF EMIS, TIER 1 (NB6), (EXC POWERTRAIN CONT MODULE (K20), CANADIAN (Z49)	12560554	1	9.25	LABEL, VEH EMIS CONT INFO (LAD)
00	Y 5.7G (L31), FED EMIS SYS (NF2), (EXC POWERTRAIN CONT MODULE (K20)	12562425	1	9.25	LABEL, VEH EMIS CONT INFO (PAY)
00	Y 5.7G (L31), CALIF EMIS LEV (NC1), (EXC POWERTRAIN CONT MODULE (K20)	12562426	1	9.25	LABEL, VEH EMIS CONT INFO (PAZ)
01	Y 5.7G (L31)	12564047	1	9.75	LABEL, VEH EMIS CONT INFO (NYB)
01	Y 5.7G (LB6)	12572217	1	9.25	LABEL, VEH EMIS CONT INFO (NYC)
02	Y 5.7G (L31)	12568747	1	9.25	LABEL, VEH EMIS CONT INFO (CYA)
02	Y 5.7G (LB6)	12570324	1	9.25	LABEL, VEH EMIS CONT INFO (CYB)
97–00	Y	15002618	1	9.55	TAG, INFL RST I/P MDL CAUTION
01–02	Y	10447122	1	9.55	TAG, INFL RST I/P MDL CAUTION
	*EXPORT*********EXPORT*********EXPORT*********EXPORT*********EXPORT*				
99–00	Y F/SEAT INFL RST SYS (AK5) MAN RST SYS (AX4) (EXPORT)	10426427	1	9.25	LABEL, CHILD SEAT LOCATION

cardiagn.com

8.808 FLASHLIGHT – LABEL – TAG, Emission, Cautionary and Informative(Con't)

01–02	Y F/SEAT INFL RST SYS (AK5), LABEL CHILD SEAT LOCATION (VJ4) (EXPORT)	10426427	1	9.25	LABEL, CHILD ST LOCATION
00–02	Y07–67 (EXC C68)	15001737	2	9.25	LABEL, INFL RST SYS CAUTION (140.0X40.0)
01–02	Y07–67 ARABIC LANGUAGE LABEL (VBX)	15749556	2	9.25	LABEL, INFL RST SYS CAUTION (ARABIC)
98	Y 5.7G (LS1), EMIS OVERRIDE (NN5), (EXC POWERTRAIN CONT MODULE (K29), LEADED FUEL EMIS EXPORT (NM8), CANADIAN (Z49)	125[illegible]250	1	9.25	LABEL, VEH EMIS CONT INFO (FNS)

8.890 CONNECTOR – HARNESS – LAMP, Underhood

97–98	Y	12101899	1	18.52	CONNECTOR, LP–U/HOOD (BLACK) (2- WAY F W/LEADS) (02.383) (AC–DELCO #PT169)
97–00	Y	12162000	1	.58	CONNECTOR, LP–U/HOOD (BLACK) (2–WAY M) (W/O LEADS) (02.530)
97–00	Y	12167120	1	24.44	CONNECTOR, LP–U/HOOD (BLACK) (2–WAY M) (W/LEADS) (04.720) (AC–DELCO #PT786)
99–02	Y	12101899	1	18.52	CONNECTOR, LP–U/HOOD (BLACK) (2–WAY F W/LEADS) (02.383) (AC–DELCO #PT169)
97–98	Y	12163775	1	15.40	HARNESS, U/HOOD LP WRG
99–00	Y07–67	12163775	1	15.40	HARNESS, U/HOOD LP WRG
99–00	Y37 LP GRP (TR9)	12163775	1	15.40	HARNESS, U/HOOD LP WRG
01–02	Y	12163775	1	15.40	HARNESS, U/HOOD LP WRG
97–99	Y	25536938	1	12.50	LAMP, U/HOOD
00–02	Y	10303617	1	12.50	LAMP, U/HOOD

9.262 BOLT – DUCT – OUTLET – PLUG – SEAL, Air Distributor

97–02	Y	10282431	RH	9.20	DUCT, FLR AIR OTLT
97–02	Y	10203104	LH	8.30	DUCT, FLR AIR OTLT
97–02	Y	10203464	RH	9.20	DUCT, FLR AIR OTLT RR (RIGHT SIDE ONLY)
97–02	Y	10282843	LH	9.20	DUCT, FLR RR AIR OTLT
97–02	Y	10282844	RH	8.80	DUCT, FLR RR AIR OTLT
97	Y07 SPEAKER SYSTEM 6 (UZ6)	10267874	LH	9.20	DUCT, FRT S/D AIR
98	Y07–67 SPEAKER SYSTEM 6 (UZ6)	10267874	LH	9.20	DUCT, FRT S/D AIR
99–02	Y SPEAKER SYSTEM 6 (UZ6)	10267874	LH	9.20	DUCT, FRT S/D AIR
99–00	Y37 6 SPKR SYS (UQ5)	10267874	LH	9.20	DUCT, FRT S/D AIR
97–00	Y (19I)	10403256	1	3.50	OUTLET, FLR AIR INR HALF (BLACK)
97	Y (92I)	10403257	1	3.50	OUTLET, FLR AIR INR HALF (PEWTER)
97–98	Y (94I)	10403258	1	3.50	OUTLET, FLR AIR INR HALF (RED)
98–02	Y07–67 (92I)	10403257	1	3.50	OUTLET, FLR AIR INR HALF (PEWTER)
98–02	Y07–67 (67I)	10403259	1	3.50	OUTLET, FLR AIR INR HALF (CAMEL)
99	Y07–67 (94I)	10403258	1	3.50	OUTLET FLR AIR INR HALF (RED)
00–02	Y07–67 (70I)	10409411	1		OUTLET FLR AIR INR HALF (RED)
01–03	Y07–67 (19I)	10403256	1	3.50	OUTLET FLR AIR INR HALF (BLACK)
01–02	Y37 (19I), (70I)	10403256	1	3.50	OUTLET, FLR AIR INR HALF (BLACK)
97	Y (94I)	10403263	1	3.50	OUTLET, FLR AIR OTR HALF (RED)
97–00	Y (19I)	10414489	1	3.50	OUTLET, FLR AIR OTR HALF (BLACK)
97	Y (92I)	10414490	1	3.50	OUTLET, FLR AIR OTR HALF (SHALE PEWTER)
98–99	Y07–67 (94I)	10403263	1	3.50	OUTLET FLR AIR OTR HALF (RED)

cardiagn.com

9.262 BOLT – DUCT – OUTLET – PLUG – SEAL, Air Distributor(Con't)

98–02	Y07–67 (92I)	10414490	1	3.50	OUTLET, FLR AIR OTR HALF (SHALE/PEWTER)
98–02	Y07–67 (67I)	10414492	1	3.50	OUTLET, FLR AIR OTR HALF (CAMEL)
00–02	Y07–67 (70I)	10409412	1		OUTLET, FLR AIR OTR HALF (RED)
01–02	Y07–67 (19I)	10414486	1	3.50	OUTLET, FLR AIR OTR HALF (BLACK)
01–02	Y37 (19I), (70I)	10414489	1	3.50	OUTLET, FLR AIR OTR HALF (BLACK)
97–99	Y SPEAKER SYSTEM 6 (UZ6)	10406518	LH	23.67	OUTLET, FRT S/D FRT AIR
99–00	Y37 4 SPKR SYS (UQ5)	10406518	LH	23.67	OUTLET, FRT S/D FRT AIR
00–02	Y	10406518	LH	23.67	OUTLET, FRT S/D FRT AIR
97–02	Y	10406514	LH	24.47	OUTLET, I/P CTR AIR
97	Y	10406515	RH	17.10	OUTLET, I/P CTR AIR
97–02	Y	10406516	1	17.10	OUTLET, I/P CTR AIR (FAR RIGHT POSITION)
98–02	Y	10406515	RH	17.10	OUTLET, I/P CTR AIR
97	Y07 SPEAKER SYSTEM 6 (UZ6)	10267885	LH	9.17	SEAL, FRT S/D AIR DUCT
98	Y07–67 SPEAKER SYSTEM 6 (UZ6)	10267885	LH	9.17	SEAL, FRT S/D AIR DUCT
99–02	Y SPEAKER SYSTEM 6 (UZ6)	10267885	LH	9.17	SEAL, FRT S/D AIR DUCT
99–00	Y37 4 SPKR SYS (UQ5)	10267885	LH	9.17	SEAL, FRT S/D AIR DUCT

9.273 CONTROL, Heater and A/C Control

97	Y A/C FRT AUTO/AUX CONT (CJ2)	09350081	1	886.00	CONTROL, HTR & A/C (AC–DELCO #15–72497)
97–98	Y A/C MAN CONT (C60)	09366311	1	339.00	CONTROL, HTR & A/C (AC–DELCO #15–72537)
97	Y A/C FRT AUTO/AUX CONT (CJ2)	16256018	1	212.00	CONTROL, HTR & A/C (REMAN) (AC–DELCO #15–72444)
98	Y A/C FRT AUTO/AUX CONT (CJ2)	09352181	1	340.00	CONTROL, HTR & A/C (AC–DELCO #15–72498)
99	Y A/C MAN CONT (C60), (1ST DES)	09366311	1	339.00	CONTROL, HTR & A/C (LABELED 9366311. FOR 2ND DES SEE 09370871) (AC–DELCO #15–72537)
99	Y A/C MAN CONT (C60), (2ND DES)	09370871	1	339.00	CONTROL, HTR & A/C (LABELED 09370871. FOR 1ST DES SEE 09366311) (AC–DELCO #15–72546)
99	Y A/C FRT AUTO/AUX CONT (CJ2)	16264311	1	339.00	CONTROL, HTR & A/C (AC–DELCO #15–72513)
00	Y A/C MAN CONT (C60)	09360311	1	236.17	CONTROL, HTR & A/C (AC–DELCO #15–72501)
00–02	Y A/C FRT AUTO/AUX CONT (CJ2)	10436062	1	339.00	CONTROL, HTR & A/C (AC–DELCO #15–72592)
01–02	Y A/C MAN CONT (C60)	10447750	1	268.00	CONTROL, HTR & A/C (AC–DELCO #15–72690)

9.275 ASPIRATOR – CONNECTOR – DUCT – MODULE – MUFFLER – SENSOR – SWITCH, A/C Electric Control

97–02	Y	15306069	1	32.01	CONNECTOR, MDL–BLO MOT CONT (4 WAY FEMALE M/P 280 (W/LEADS)) (4 WAY F W/LEADS) (13 100) (AC–DELCO #PT1231)
97–02	Y	15306189	1	42.09	CONNECTOR MDL BLO MOT CONT (BLACK) (6 WAY F W/LEADS, 7 12GA & 4 18GA AS REQ) (02 636) (AC DELCO #PT1346)
02	YY67 4 SPD A/TRANS (M30), A C FRT AUTO/AUX CONT (CJ2), T&T WHL (NJ7) (EXC TAIL & B-UP (T89) (EXPORT)	15306069	1	32.01	CONNECTOR, MDL BLO MOT CONT (4 WAY FEMALE M.P 280 (W/LEADS)) (4 WAY F W/LEADS) (13 100) (AC DELCO #PT1231)

cardiagn.com

9.275 ASPIRATOR – CONNECTOR – DUCT – MODULE – MUFFLER – SENSOR – SWITCH, A/C Electric Control(Con't)

97–02	Y	12045470	1	3.33	CONNECTOR, MDL–HTR, A/C PROGMR (32–WAY FEMALE M/P 100. SHIPPED BULK FROM PACKARD.) (32–WAY F) (09.768)
97–02	Y	12125635	1	35.97	CONNECTOR, MDL–HTR, A/C PROGMR (BLACK) (7–WAY F) (W/LEADS) (10.163) (AC–DELCO #PT547)
97–02	Y	12125678	1	35.19	CONNECTOR, MDL–HTR, A/C PROGMR (6–WAY FEMALE M/P 3MM (W/LEADS)) (6–WAY F, W/LEADS) (09.172) (AC–DELCO #PT590)
98–00	Y	15305996	1	59.67	CONNECTOR, MDL–HTR, A/C PROGMR (12–WAY F W/LEADS) (09.715) (AC–DELCO #PT1128)
01–02	YY67	15305996	1	59.67	CONNECTOR, MDL–HTR, A/C PROGMR (12–WAY FEMALE M/P 100 (W/LEADS) .) (12–WAY F W/LEADS) (09.715) (AC–DELCO #PT1128)
02	YY67 4–SPD A/TRANS (M30), A/C FRT AUTO/AUX CONT (CJ2), T&T WHL (N37), (EXC TAIL & S/LP (T89) (EXPORT)	12045470	1	3.33	CONNECTOR, MDL–HTR, A/C PROGMR (32–WAY F) (09.768)
97–02	Y	12085535	1	18.01	CONNECTOR, SEN–I/S AIR TEMP (2–WAY F W/LEADS W/INDEX TAB OTR EDGE OF CAVITY B) (02.535) (AC–DELCO #PT146)
02	YY67 4–SPD A/TRANS (M30), A/C FRT AUTO/AUX CONT (CJ2), T&T WHL (N37), (EXC TAIL & S/LP (T89) (EXPORT)	12085535	1	18.01	CONNECTOR, SEN–I/S AIR TEMP (2–WAY F W/LEADS W/INDEX TAB OTR EDGE OF CAVITY B) (02.535) (AC–DELCO #PT146)
97–02	Y	12085481	1	18.12	CONNECTOR, SEN–SUN LOAD TEMP (BLACK) (2–WAY M W/LEADS) (02.535) (AC–DELCO #PT103)
02	YY67 4–SPD A/TRANS (M30), A/C FRT AUTO/AUX CONT (CJ2), T&T WHL (N37), (EXC TAIL & S/LP (T89) (EXPORT)	12085481	1	18.12	CONNECTOR, SEN–SUN LOAD TEMP (BLACK) (2–WAY M W/LEADS) (02.535) (AC–DELCO #PT103)
97–99	Y	12117269	1	19.48	CONNECTOR, SW–HTR & A/C CONT SEL (3–WAY F) (W/LEADS) (10.150) (AC–DELCO #PT442)
97–02	Y	22624066	1	41.75	SENSOR, A/C REFRIG PRESS (AC–DELCO #15–5724)
97–02	Y	16267411	1	18.30	SENSOR, I/S AIR TEMP (AC–DELCO #15–72496)
97–02	Y A/C FRT AUTO/AUX CONT (CJ2)	16137340	1	35.75	SENSOR, SUN LOAD TEMP (AC–DELCO #16–71849)

9.650 AMPLIFIER – CONNECTOR – RADIO – RELAY – SPEAKER, Radio Receiver

97–99	Y STEREO (UN0), SPEAKER SYSTEM 6 (UZ6)	16257601	1	1040.00	RADIO, AM/FM STEREO & CLK & CD PLYR (AC–DELCO #16257601)
00–02	Y STEREO (UN0), SPEAKER SYSTEM 6 (UZ6)	09390211	1	740.00	RADIO, AM/FM STEREO & CLK & CD PLYR (AC–DELCO #9390211)

cardiagn.com

9.650 AMPLIFIER – CONNECTOR – RADIO – RELAY – SPEAKER, Radio Receiver(Con't)

97–99	Y STEREO, AM/FM W/AUTO REV CASSETTE, AUTO TONE (UL0), SPEAKER SYSTEM 6 (UZ6), (EXC JAPANESE RDO FREQ (UK1) (EXPORT), EUROPEAN RDO FREQ (UL2) (EXPORT)	16257631	1	689.00	RADIO, AM/FM STEREO & CLK & T/PLYR (AC–DELCO #16257631) ....
99–00	Y37 STEREO, AM/FM W/AUTO REV CASSETTE, AUTO TONE (UL0), 4 SPKR SYS (UQ5), (EXC JAPANESE RDO FREQ (UK1) (EXPORT), EUROPEAN RDO FREQ (UL2) (EXPORT)	16210221	1	519.00	RADIO, AM/FM STEREO & CLK & T/PLYR (AC–DELCO #16210221) ....
00–02	Y STEREO, AM/FM W/AUTO REV CASSETTE, AUTO TONE (UL0), SPEAKER SYSTEM 6 (UZ6), (EXC JAPANESE RDO FREQ (UK1) (EXPORT), EUROPEAN RDO FREQ (UL2) (EXPORT)	09390231	1	609.00	RADIO, AM/FM STEREO & CLK & T/PLYR (AC–DELCO #9390231) .....
97–02	Y	12193604	1	23.80	RELAY, RDO SPKR AMPF (GRAY) (SPST 280 MINI) (4–TERMINAL) (09.778) (AC–DELCO #15–8733) ...
97–02	Y SPEAKER SYSTEM 6 (UZ6)	10447355	2	319.00	SPEAKER, RDO FRT (3"TWIDDLER, 7"WOOFER, 100W AMP) (AC–DELCO #10447355) .....
99–00	Y37 4 SPKR SYS (UQ5)	16255371	2	77.00	SPEAKER, RDO FRT (AC–DELCO #16255371) .. ..
	*EXPORT***************EXPORT***************EXPORT***************EXPORT***************EXPORT*				
97–99	Y STEREO, AM/FM W/AUTO REV CASSETTE, AUTO TONE (UL0), EUROPEAN RDO FREQ (UL2) (EXPORT), SPEAKER SYSTEM 6 (UZ6)	16257611	1	699.00	RADIO, AM/FM STEREO & CLK & T/PLYR (AC–DELCO #16257611) ....
97–99	Y JAPANESE RDO FREQ (UK1) (EXPORT), STEREO, AM/FM W/AUTO REV CASSETTE, AUTO TONE (UL0), SPEAKER SYSTEM 6 (UZ6)	16257621	1	669.00	RADIO, AM/FM STEREO & CLK & T/PLYR (AC–DELCO #16257621) ....
00–02	Y JAPANESE RDO FREQ (UK1) (EXPORT), STEREO, AM/FM W/AUTO REV CASSETTE, AUTO TONE (UL0), SPEAKER SYSTEM 6 (UZ6)	09390221	1	649.00	RADIO, AM/FM STEREO & CLK & T/PLYR (AC–DELCO #9390221) .....
00–02	Y STEREO, AM/FM W/AUTO REV CASSETTE, AUTO TONE (UL0), EUROPEAN RDO FREQ (UL2) (EXPORT), SPEAKER SYSTEM 6 (UZ6)	09390241	1	669.00	RADIO, AM/FM STEREO & CLK & T/PLYR (AC–DELCO #9390241) .....

9.656 CONNECTOR, Radio and Speaker

99–00	Y	12117371	1	26.70	CONNECTOR, INLINE–TO CD PLYR (3–WAY M W/LEADS) (02.530) (AC DELCO #PT604) . ..
97–02	Y . .	12117371	1	26.70	CONNECTOR, INLINE–TO PWR ANT (3 WAY M W/LEADS) (02 530) (AC DELCO #PT604) ..
97–02	Y	12086486	1	53.04	CONNECTOR, RDO (10 WAY FEMALE M/P 100 (W/LEADS)) (BLACK) (10 WAY F) (W/LEADS) (02.535) (AC DELCO #PT108) .

cardiagn.com

9.656 CONNECTOR, Radio and Speaker(Con't)

97–02	Y	12102628	1	61.71	CONNECTOR, RDO (NATURAL) (9–WAY F, W/LEADS) (04.329) (AC–DELCO #PT315)
97–02	Y	12102636	1	22.09	CONNECTOR, RDO (NATURAL) (4--WAY) (W/LEADS) (AC–DELCO #PT323)
97–02	Y	12125670	1	22.95	CONNECTOR, RDO (WHITE) (10–WAY F) (W/LEADS) (AC–DELCO #PT582)
02	YY67 4–SPD A/TRANS (M30), A/C FRT AUTO/AUX CONT (CJ2), T&T WHL (N37), (EXC TAIL & S/LP (T89) (EXPORT)	12085486	1	53.04	CONNECTOR, RDO (BLACK) (10–WAY F) (W/LEADS) (02.535) (AC–DELCO #PT108)
02	YY67 4–SPD A/TRANS (M30), A/C FRT AUTO/AUX CONT (CJ2), T&T WHL (N37), (EXC TAIL & S/LP (T89) (EXPORT)	12102628	1	61.71	CONNECTOR, RDO (NATURAL) (9--WAY F, W/LEADS) (04.329) (AC–DELCO #PT315)
02	YY67 4–SPD A/TRANS (M30), A/C FRT AUTO/AUX CONT (CJ2), T&T WHL (N37), (EXC TAIL & S/LP (T89) (EXPORT)	12102636	1	22.09	CONNECTOR, RDO (NATURAL) (4–WAY) (W/LEADS) (AC–DELCO #PT323)
02	YY67 4–SPD A/TRANS (M30), 6–SPD M/TRANS (MM6), A/C FRT AUTO/AUX CONT (CJ2), A/C MAN CONT (C60), (EXC TAIL & S/LP (T89) (EXPORT)	12125670	1	22.95	CONNECTOR, RDO (WHITE) (10--WAY F) (W/LEADS) (AC–DELCO #PT582)
97–02	Y	12101825	2	18.01	CONNECTOR, SPKR–RDO (GRAY) (2–WAY F W/LEADS) (INDEX TAB CTR CAVITY A&B) (02.535) (AC–DELCO #PT217)

9.709 CONNECTOR – HOUSING – LIGHTER – PLUG – RECEPTACLE – RETAINER, Cigarette Lighter

97–01	Y	12085504	1	17.91	CONNECTOR, C/LTR (2–WAY M/F) (W/LEADS) (USE T/W 11516142 HOUSING C/LTR) (02.535) (AC–DELCO #PT125)
02	YY67	12085504	1	17.91	CONNECTOR, C/LTR (2–WAY M/F) (W/LEADS) (USE T/W 11516142 HOUSING C/LTR) (02.535) (AC–DELCO #PT125)
97–98	Y	12102616	1	14.69	CONNECTOR, RCPT–ACSRY PWR (2–WAY F) (W/LEADS) (02.530) (AC–DELCO #PT303)
98–02	Y	12126486	1	61.98	CONNECTOR, RCPT–ACSRY PWR (3–WAY FEMALE M/P 280 FLEX–LOCK (W/LEADS) .) (3–WAY F FLEX LOCK W/LEADS) (02.694) (AC–DELCO #PT756)
98–02	Y	12129490	1	2.35	CONNECTOR, RCPT–ACSRY PWR (3–WAY MALE M/P 280 (W/O LEADS)) (3–WAY M W/O LEADS) (CLIP SLOT) (13.100)
99	Y (1ST DES)	12102616	1	14.60	CONNECTOR, RCPT–ACSRY PWR (2–WAY F) (W/LEADS) (02.530) (2–WAY F, FOR 2ND DES SEE 15305985 (PT1079) (AC–DELCO #PT303)
99	Y (2ND DES)	15305985	1	18.21	CONNECTOR, RCPT–ACSRY PWR (3–WAY F, W/LEADS) (3–WAY F, FOR 1ST DES SEE 12102616 (PT303) (AC–DELCO #PT1079)

cardiagn.com

9.709 CONNECTOR – HOUSING – LIGHTER – PLUG – RECEPTACLE – RETAINER, Cigarette Lighter(Con't)

00–02	Y	15305985	1	18.21	CONNECTOR, RCPT–ACSRY PWR (3–WAY FEMALE M/P 280 FLXLK (W/LEADS) .) (3–WAY F, W/LEADS) (AC–DELCO #PT1079)
01–02	YY67	12126486	1	61.98	CONNECTOR, RCPT–ACSRY PWR (3–WAY FEMALE M/P 280 FLEX–LOCK (W/LEADS) .) (3–WAY F FLEX LOCK W/LEADS) (02.694) (AC–DELCO #PT756)
02	YY67 4–SPD A/TRANS (M30), A/C FRT AUTO/AUX CONT (CJ2), T&T WHL (N37), (EXC TAIL & S/LP (T89) (EXPORT)	12129490	1	2.35	CONNECTOR, RCPT–ACSRY PWR (3–WAY MALE M/P 280 (W/O LEADS) . SHIPPED BULK FROM PACKARD.) (3–WAY M, W/O LEADS) (CLIP SLOT) (13.100)
02	YY67 4–SPD A/TRANS (M30), A/C FRT AUTO/AUX CONT (CJ2), T&T WHL (N37), (EXC TAIL & S/LP (T89) (EXPORT)	15305985	1	18.21	CONNECTOR, RCPT–ACSRY PWR (3–WAY FEMALE M/P 280 FLXLK (W/LEADS) .) (3–WAY F, W/LEADS) (AC–DELCO #PT1079)
97–02	Y	11516142	1	8.13	HOUSING, C/LTR (MATES W/CONN 12085504, (CASCO) 1–PIN CONN)
97–98	Y	11516141	1	5.53	LIGHTER, CIG (BLACK) (SM) (CASCO)
99–02	Y	11516140	1	5.53	LIGHTER, CIG (BLACK) (CASCO) (W/LARGE, PLASTIC KNOB)
97–99	Y	12450056	1	.89	PLUG, ACSRY PWR RCPT OPG
97–98	Y	10202970	1	6.14	RECEPTACLE, ACSRY PWR
99	Y (1ST DES)	10202970	1	6.14	RECEPTACLE, ACSRY PWR (USED IN 23.0MM DIA HOLE FOR AUX PWR OUTLET, FOR 2ND DES SEE #12450044)
99	Y (2ND DES)	12450044	1	6.14	RECEPTACLE, ACSRY PWR (CAVITY A IS B+, CAVITY C IS GND, CAVITY B IS FOR LIGHTED RING) (USED IN 28.0MM SLOTTED HOLE FOR AUX PWR OUTLET, FOR 1ST DES SEE #10202970)
00–02	Y	12450044	1	6.14	RECEPTACLE, ACSRY PWR (CAVITY A IS B+, CAVITY C IS GND, CAVITY B IS FOR LIGHTED RING)
97–98	Y	10202971	1	3.33	RETAINER, ACSRY PWR RCPT
99	Y (1ST DES)	10202971	1	3.33	RETAINER, ACSRY PWR RCPT (USED IN 23.0MM DIA HOLE FOR AUX PWR OUTLET, FOR 2ND DES SEE #12450047)
99	Y (2ND DES)	12450047	1	3.33	RETAINER, ACSRY PWR RCPT (BLACK) (WITH CAP) (USED IN 28.0MM SLOTTED HOLE FOR AUX PWR OUTLET, FOR 1ST DES SEE #10202971)
00–02	Y	12450047	1	3.33	RETAINER, ACSRY PWR RCPT (BLACK) (WITH CAP)
97–02	Y	11516144	1	*.57	RETAINER, C/LTR HSG (CASCO)

9.715 DISPLAY – PLATE – SWITCH, Instrument Cluster Head Up

99–00	Y HEAD UP DISPLAY (UV6)	10279814	1	1062.89	DISPLAY, INST CSTR HEAD UP (HUD ALONE) (AC–DELCO #10279814)
01–02	Y07–67 HEAD UP DISPLAY (UV6)	10279814	1	1062.89	DISPLAY, INST CSTR HEAD UP (HUD ALONE) (AC–DELCO #10279814)
02	YY37	10316475	1	1062.89	DISPLAY, INST CSTR HEAD UP (AC–DELCO #10316475)

cardiagn.com

9.715 DISPLAY – PLATE – SWITCH, Instrument Cluster Head Up(Con't)

99–00	Y HEAD UP DISPLAY (UV6)	12198648	1	103.37	SWITCH, INST CSTR HEAD UP DISPLAY DIMR (AC–DELCO #12198648)
01–02	Y07–67 HEAD UP DISPLAY (UV6)	12198648	1	103.37	SWITCH, INST CSTR HEAD UP DISPLAY DIMR (AC–DELCO #12198648)

9.735 CLUSTER – NUT, Instrument Panel Gage

97–02	Y	25536302	2	3.33	NUT, INST CSTR (4.2X1.41 TAPPING) (SPL) (03.430)
02	Y	11513599	2	3.48	NUT, INST CSTR (M4.2X1.41TAP) (U TYPE) (PZOR) (08.921) (AC–DELCO #11513599)

9.743 BEZEL, Instrument Cluster

97–02	Y ELEK GA CSTR (U52)	10417123	1	156.49	BEZEL, I/P CSTR TR PLT

9.744 BULB, Instrument Cluster

97–02	Y	12533422	1	7.66	BULB, INST CSTR (AC–DELCO #12533422)

9.748 LENS, Instrument Cluster

97–02	Y ELEK GA CSTR (U52)	12533420	1	43.26	LENS, INST CSTR (AC–DELCO #12533420)

9.768 BEZEL – CONNECTOR – SWITCH, Driver Information Display

99–02	Y	10425223	1	16.10	BEZEL, DRVR INFO DISPLAY (INCLS BEZEL)
97–01	Y	12065803	1	3.33	CONNECTOR, DISPLAY–DRVR INFO (34–WAY F) (09.735)
02	YY67	12065803	1	3.33	CONNECTOR, DISPLAY–DRVR INFO (34–WAY F) (09.735)
97–02	Y ELEK GA CSTR (U52)	12135152	1	69.52	SWITCH, DRVR INFO DISPLAY (AC–DELCO #12135152)

9.769 BULB, Vehicle Navigation/Information

97–98	Y 5 7G (LS1), ELEK GA CSTR (U52)	16056613	3	4.81	BULB, DRVR INFO DISPLAY SW (W/O BOOT) (.5CP) (09.279) (AC–DELCO #16056613)
99–02	Y ELEK GA CSTR (U52)	16056613	3	4.81	BULB, DRVR INFO DISPLAY SW (W/O BOOT) (.5CP) (09.279) (AC–DELCO #16056613)

9.779 DUCT – GRILLE – LINK – VALVE, Windshield Defroster

97–02	Y A/C FRT AUTO/AUX CONT (CJ2)	10400366	1	16.10	GRILLE, W/S DEFR NOZ (BLACK)
97–02	Y A/C MAN CONT (C60)	10400367	1	16.10	GRILLE, W/S DEFR NOZ (BLACK)

9.786 BRACKET – CASE – DUCT – STRAP – VALVE, Air Distributor

97–02	Y	10229412	1	45.57	DUCT, AIR DISTR

9.988 LAMP, Rear Compartment Lamp

97–98	Y	10258647	2	8.35	LAMP, CARGO
99–00	Y07–67	10258647	2	8.35	LAMP, CARGO
99–00	Y37 LP GRP (1R9)	10258647	2	8.35	LAMP, CARGO
01–02	Y	10258647	2	8.35	LAMP, CARGO

12.009 ASHTRAY – RETAINER – SPRING, Instrument Panel Ashtray

97–02	Y	10247661	1	16.70	ASHTRAY, I/P
97–02	Y	10401217	2	3.45	RETAINER, I/P ASHTRAY (10 242)

cardiagn.com

12.113 MOLDING, Center Pillar

99-02	Y37	10422994	RH	15.85	MOLDING, BODY L/PLR UPR RVL (12.942)
99-02	Y37	10422995	LH	15.85	MOLDING, BODY L/PLR UPR RVL (12.942)

12.170 BRACKET – BUMPER – CONNECTOR – EMBLEM – HINGE – INSULATOR – LATCH – LID – NUT – PANEL – PLATE – PLUG – PROTECTOR – SHIM – STRIKER – STRUT – WEATHERSTRIP, Folding Top Compartment

98-02	Y67	10282643	1	10.70	BRACKET, F/TOP STOW COMPT EXTN PNL
98-02	Y67	10405605	1	6.55	BRACKET, F/TOP STOW COMPT LID BPR
98-02	Y67	10404536	1	9.70	BRACKET, F/TOP STOW COMPT LID LAT
98-02	Y67	10103036	2	*.51	BUMPER, F/TOP STOW COMPT LID (POSN #1) (12.212)
98-02	Y67	10414378	1	3.45	BUMPER, F/TOP STOW COMPT LID (POSN #2)
98-02	Y67	10278669	2	3.45	BUMPER, F/TOP STOW COMPT LID HGE
98-02	Y67	12101825	1	18.01	CONNECTOR, SOL-F/TOP LAT REL ACTR (GRAY) (2-WAY F W/LEADS) (INDEX TAB CTR CAVITY A&B) (02.535) (AC-DELCO #PT217)
01-02	Y	12101888	2	18.01	CONNECTOR, SOL--F/TOP LAT REL ACTR (BLACK) (2-WAY F W/LEADS) (02.535) (AC-DELCO #PT159)
98-02	Y67	10282774	1	17.55	EMBLEM, F/TOP STOW CMPT EXTN OTR PNL
98-02	Y67	10418263	LH	41.00	HINGE, F/TOP STOW COMPT LID
98-02	Y67	10418266	RH	41.00	HINGE, F/TOP STOW COMPT LID
98-02	YY67	10308440	2	3.45	INSULATOR, F/TOP STOW FRT
98-99	YY67	10404291	1	3.45	INSULATOR, F/TOP STOW FRT (POS #2)
00-02	YY67	10404291	1	3.45	INSULATOR, F/TOP STOW FRT (POS #2)
98-02	Y67	10445389	1	82.25	LATCH, F/TOP STOW COMPT LID (W/ACTUATOR & LID AJAR SW)
98-02	Y67	10414341	1	438.00	LID, F/TOP STOW COMPT
98-01	Y67	20350354	4	*.55	NUT, F/TOP STOW COMPT EXTN PNL (PUSH--IN 6.3 SQ HOLE) (NYLON) (11.175)
00-02	Y67	00347347	4	*1.03	NUT, F/TOP STOW COMPT EXTN PNL (UPLEVEL) (01.267)
98-00	Y67 (10U)	10284823	1	252.00	PANEL, F/TOP STOW COMPT EXTN OTR (WHITE)
98-02	Y67 (11U)	10284824	1	252.00	PANEL, F/TOP STOW COMPT EXTN OTR (WHITE)
98-00	Y67 (23U)	10284825	1	252.00	PANEL, F/TOP STOW COMPT EXTN OTR (BLUE)
98-02	Y67 (41U)	10284826	1	252.00	PANEL, F/TOP STOW COMPT EXTN OTR (BLACK)
98	Y67 (53U)	10284827	1	252.00	PANEL, F/TOP STOW COMPT EXTN OTR (RED)
98-02	Y67 (70U)	10284830	1	252.00	PANEL, F/TOP STOW COMPT EXTN OTR (RED)
98	Y67 (87U)	10284831	1	252.00	PANEL, F/TOP STOW COMPT EXTN OTR (GREEN)
98-00	Y67 (13U)	10402183	1	252.00	PANEL, F/TOP STOW COMPT EXTN OTR (SILVER)

cardiagn.com

12.170 BRACKET – BUMPER – CONNECTOR – EMBLEM – HINGE – INSULATOR – LATCH – LID – NUT – PANEL – PLATE – PLUG – PROTECTOR – SHIM – STRIKER – STRUT – WEATHERSTRIP, Folding Top Compartment(Con't)

98–99	Y67 (95U)	10402184	1	252.00	PANEL, F/TOP STOW COMPT EXTN OTR (AMETHYST)
98	Y67 (21U)	10402821	1	252.00	PANEL, F/TOP STOW COMPT EXTN OTR (BLUE)
98–99	Y67 (58U)	10404958	1	252.00	PANEL, F/TOP STOW COMPT EXTN OTR (SUEDE)
98–01	Y67 (28U)	10421288	1	252.00	PANEL, F/TOP STOW COMPT EXTN OTR (BLUE)
99	Y67 (86U)	10298644	1	252.00	PANEL, F/TOP STOW COMPT EXTN OTR (RED)
00–02	Y67 (79U)	10410618	1	252.00	PANEL, F/TOP STOW COMPT EXTN OTR (YELLOW)
00–01	Y67 (91U)	10426575	1	252.00	PANEL, F/TOP STOW COMPT EXTN OTR (GREEN)
00–02	Y67 (86U)	10437434	1	252.00	PANEL, F/TOP STOW COMPT EXTN OTR (RED)
01–02	Y67 (40U)	10427429	1	252.00	PANEL, F/TOP STOW COMPT EXTN OTR (WHITE)
01–02	Y67 (12U)	10427447	1	252.00	PANEL, F/TOP STOW COMPT EXTN OTR (SILVER)
02	Y (21U)	10444464	1	342.00	PANEL, F/TOP STOW COMPT EXTN OTR (BLUE)
98–02	Y67	10279082	LH	4.65	PLATE, F/TOP STOW COMPT LID HGE ANC
98–02	Y67	10284586	RH	4.65	PLATE, F/TOP STOW COMPT LID HGE ANC
98–02	Y67	10279019	1	35.00	PROTECTOR, F/TOP STOW COMPT LID
98–02	Y67	10400232	1	2.95	SHIM, F/TOP STOW COMPT LID
98–02	Y67	10275646	1	9.50	STRIKER, F/TOP STOW COMPT LID LAT
98–02	Y67	10275941	2	17.55	STRUT, F/TOP STOW COMPT LID
98–02	Y67	10444523	1	98.50	WEATHERSTRIP, F/TOP STOW COMPT LID

12.180 WINDOW, Rear Hatch Window

97–02	Y07	10247317	1	1108.80	WINDOW, R/CMPT LIFT (HTCH GLS)

12.243 ACTUATOR – CLIP – CONNECTOR – HANDLE – LATCH – RELAY – SWITCH, Rear Compartment Lid Release or Ajar

97–98	Y07	16625936	2	3.33	CLIP, R/CMPT LID LAT REL WRG HARN (R/CMPT L/WDO LATCH)
98–02	Y67	16625936	1	3.33	CLIP, R/CMPT LID LAT REL WRG HARN (F/TOP STOW CMPT LID LATCH)
98–02	Y67	16625936	1	3.33	CLIP, R/CMPT LID LAT REL WRG HARN (R/CMPT LID LATCH)
99–02	Y37	16625936	2	3.33	CLIP, R/CMPT LID LAT REL WRG HARN
02	YY	03816659	1	*.87	CLIP, R/CMPT LID LAT REL WRG HARN (7" ADJ, W/ROSEBUD FOR .25 DIA HOLE .031–.14 TH) (08.965)
99	Y07	12117371	2	25.70	CONNECTOR, MOT–R/CMPT LID PULDN ACTR (3–WAY M W/LEADS) (02.530) (AC–DELCO #PT504)
97–02	Y07 SPEAKER SYSTEM 6 (UZ6)	12101864	1	18.16	CONNECTOR, SW–R/CMPT LID AJAR IND (BLACK) (3–WAY F W/LEADS) (02.535) (AC–DELCO #PT256)

cardiagn.com

12.243 ACTUATOR – CLIP – CONNECTOR – HANDLE – LATCH – RELAY – SWITCH, Rear Compartment Lid Release or Ajar(Con't)

97–99	Y07	12117371	2	25.70	CONNECTOR, SW–R/CMPT LID AJAR IND (3–WAY M W/LEADS) (02.530) (AC–DELCO #PT504)
98–02	Y67 SPEAKER SYSTEM 6 (UZ6)	12101864	1	18.16	CONNECTOR, SW–R/CMPT LID AJAR IND (BLACK) (3–WAY F W/LEADS) (02.535) (AC–DELCO #PT256)
99–02	Y37	12101864	1	18.16	CONNECTOR, SW–R/CMPT LID AJAR IND (BLACK) (3–WAY F W/LEADS) (02 535) (AC–DELCO #PT256)
99–02	Y37	12117371	2	25.70	CONNECTOR, SW–R/CMPT LID AJAR IND (3–WAY M W/LEADS) (02.530) (AC–DELCO #PT504)
99–00	Y67	12117371	2	25.70	CONNECTOR, SW–R/CMPT LID AJAR IND (3–WAY M W/LEADS) (02.530) (AC–DELCO #PT504)
01–02	YY37	12101825	1	18.01	CONNECTOR, SW–R/CMPT LID REL (GRAY) (2–WAY F W/LEADS) (INDEX TAB CTR CAVITY A&B) (02.535) (AC–DELCO #PT217)
97–02	Y	12088567	1	16.45	RELAY, R/CMPT LID REL (GRAY) (4–WAY) (09.277) (AC–DELCO #15–8571)
97–02	Y (EXC EUROPEAN PROVISIONS (VD1) (EXPORT)	10276017	1	9.31	SWITCH, F/TNK FIL DR LK REL (03.028)
97–98	Y07	16608046	1	8.40	SWITCH, R/CMPT LID AJAR IND (LOCATED ON LAT IN TRUNK) (AC–DELCO #D1459C)
98–02	Y67	16608046	1	8.40	SWITCH, R/CMPT LID AJAR IND (LOCATED ON LAT IN TRUNK) (AC–DELCO #D1459C)
99–02	Y37	16608046	1	8.40	SWITCH, R/CMPT LID AJAR IND (LOCATED ON LAT IN TRUNK) (AC–DELCO #D1459C)
97–02	Y (EXC FRT FOG LP (T96), EUROPEAN PROVISIONS (VD1) (EXPORT)	12135157	1	57.96	SWITCH, R/CMPT LID REL (AC–DELCO #D7012C)
02	Y67	16608046	1	8.40	SWITCH, R/CMPT LID REL (LOCATED ON LAT IN TRUNK) (AC–DELCO #D1459C)
	*EXPORT**********EXPORT**********EXPORT**********EXPORT**********EXPORT*				
97–02	Y EUROPEAN PROVISIONS (VD1) (EXPORT)	10280957	1	66.19	SWITCH, R/CMPT LID & FUEL FIL DR REL (AC–DELCO #D7007C)

12.269 RETAINER – SEAL – SEALING STRIP – WEATHERSTRIP, Rear Hatch Window

99–02	Y07	10427824	2	.44	RETAINER, R/CMPT L/WDO SEAL
97–02	Y07	10401667	1	17.65	SEAL, R/CMPT L/WDO FRT AUX
97–02	Y07	10401665	1	16.65	SEAL, R/CMPT L/WDO RR AUX (POSN #1)
97–98	Y07	10407727	1	29.50	SEAL, R/CMPT L/WDO RR AUX (FRT SECONDARY SEAL) (POSN #2) (NO TAIL AT END OF SEAL)
99–02	Y07	10438026	1	26.75	SEAL, R/CMPT L/WDO RR AUX (FRONT SECONDARY SEAL)
98–02	Y67	10408526	2	8.95	SEALING STRIP, R/CMPT LID AUX
97–02	Y07	10236980	1	99.00	WEATHERSTRIP, R/CMPT L/WDO (EPDM EXTRUDED)
97–00	Y07	10280750	1	18 05	WEATHERSTRIP, R/CMPT L/WDO
98–02	Y67	10255033	1	46.25	WEATHERSTRIP, R/CMPT LID
99–02	Y37	10255033	1	46.25	WEATHERSTRIP, R/CMPT LID

cardiagn.com

12.659 NUT – RIVET – STUD, Front Body Hinge Pillar

97	Y	10237960	13	.46	NUT, BODY H/PLR TIE BAR (M6X1.0) (10.512)
98–02	Y	10410398	13	*.51	NUT, BODY H/PLR TIE BAR (M6X1.0 ITR "D" THD) (10.512)

12.684 RETAINER – SEALING STRIP, Body Lock Pillar

98–02	Y67	20538173	2	3.45	RETAINER, BODY L/PLR UPR SEAL (BLACK) (4.8 HOLE) (14.685)

12.800 RETAINER – SCREEN, Cowl Top Vent Louver

97–02	Y	21075686	4	*.51	RETAINER, AIR INL SCRN (10.154)
97	Y	10247327	1	68.75	SCREEN, AIR INL (#86) (W/SEAL & FRM)
97	Y	10446063	1	68.75	SCREEN, AIR INL (#86)
98–02	Y	10446063	1	68.75	SCREEN, AIR INL (#86)

12.804 BOLT – INSULATOR – PANEL – SEAL – TUBE, Shroud and Dash and Vent Duct Panel

97–02	Y	10433334	1	69.50	INSULATOR, DA PNL
97–02	Y	10424866	1	251.00	PANEL, DA
97–02	Y	10247310	1	82.25	PANEL, PLNM LWR
97–98	Y	10247311	1	82.25	PANEL, PLNM UPR
99–01	Y (EXC HEAD UP DISPLAY (UV6)	10247311	1	82.25	PANEL, PLNM UPR
99–01	Y HEAD UP DISPLAY (UV6)	10410117	1	114.00	PANEL, PLNM UPR
02	YY07–67 HEAD UP DISPLAY (UV6)	10410117	1	114.00	PANEL, PLNM UPR
02	YY37	10410117	1	114.00	PANEL, PLNM UPR
02	Y07–67 (EXC HEAD UP DISPLAY (UV6)	10247311	1	82.25	PANEL, PLNM UPR
97–02	Y	11515174	1	*1.75	SEAL, PLNM PNL (4 1/4"X7 1/2") (TRIM AS REQ'D) (15.492)

12.807 BOLT – FRAME – RETAINER – WEATHERSTRIP, Windshield Frame

97–02	Y	10420764	1	920.00	FRAME, W/S
97–02	Y	20540336	4	3.45	RETAINER, W/S FRM W/STR (PAINT TO MATCH) (FITS .18 HOLE, .7 LG, .43 OD, NYLON) (14.630)
97–02	Y07	10432623	1	241.00	WEATHERSTRIP, W/S FRM
98–02	Y67	10305948	1	241.00	WEATHERSTRIP, W/S FRM

12.810 BEZEL – BOLT – BRACKET – HANDLE – LOCATOR – MOLDING – NUT – PANEL – PIN – PLATE – RETAINER – SPACER – WEATHERSTRIP, Roof Panel

Note: PLEASE REFER TO ACCESSORY GROUP 21.552 FOR WINDOWS NOT FOUND.

97–02	Y07 DUAL REMOVEABLE ROOF (C2L)	10293378	8	*1.65	BOLT, RF LIFT OFF PNL/WDO LAT HDL
97–02	Y07 CLEAR ROOF PANEL (CC3), REMOVABLE SUNROOF (CF7)	10293378	4	*1.65	BOLT, RF LIFT OFF PNL/WDO LAT HDL
00–01	Y67 CONV ROOF (C05)	10293378	4	*1.65	BOLT, RF LIFT OFF PNL/WDO LAT HDL
01–02	YY67 CONV ROOF (C05), (16T)	10293378	4	*1.65	BOLT, RF LIFT OFF PNL/WDO LAT HDL
97–02	Y07	15567059	4	3.33	BOLT, RF LIFT OFF PNL/WDO RR LOCR BRKT (HEX M10X1.5X28) (16.545)
97–02	Y07	10092102	4	*.52	BOLT, RF PNL (LWR RF) (M4 2X1.15X20)
99	Y37	11516932	4	*.61	BOLT, RF PNL FRT BRKT ("UPR FRT" ATTACHES TO FRAME–W/S) (08.900)
99–02	Y37	15567059	4	3.33	BOLT, RF PNL RR BRKT (UPR RR M10" INTO RF BOW) (HEX M10X1.5X28) (16.545)

cardiagn.com

12.810 BEZEL – BOLT – BRACKET – HANDLE – LOCATOR – MOLDING – NUT – PANEL – PIN – PLATE – RETAINER – SPACER – WEATHERSTRIP, Roof Panel(Con't)

97–02	Y07	10262515	LH	3.40	BRACKET, RF LIFT OFF PNL/WDO RR LOCR
97–02	Y07	10262516	RH	3.40	BRACKET, RF LIFT OFF PNL/WDO RR LOCR
97–02	Y07	10284474	2	16.45	BRACKET, RF LIFT OFF PNL/WDO STOW FRT (W/COVER & INSULATOR) (12.815)
99–02	Y37	10290699	LH	4.95	BRACKET, RF PNL FRT (UPR FRT)
99–02	Y37	10290700	RH	4.95	BRACKET, RF PNL FRT (UPR FRT)
99–01	Y37	10291419	LH	7.85	BRACKET, RF PNL RR (UPR RR)
99–01	Y37	10291420	RH	7.85	BRACKET, RF PNL RR (UPR RR)
97–02	Y07	10281487	2	*.69	NUT, RF LIFT OFF PNL/WDO RR LOCR BRKT (POSN #1) (CENTER OF RF PANEL BOW) (04.665)
97–02	Y07	10285255	4	3.45	NUT, RF LIFT OFF PNL/WDO RR LOCR BRKT (POSN #2) (AT ENDS OF RF PANEL BOW)
99	Y37	10258563	7	3.45	NUT, RF PNL (14.686)
99–02	Y37	10285255	4	3.45	NUT, RF PNL RR BRKT (UPR RR M10")
97–02	Y07	10289224	1	219.00	PANEL, RF
99–02	Y37	10255235	1	2687.00	PANEL, RF
97–02	Y07 REMOVABLE SUNROOF (CF7), DUAL REMOVEABLE ROOF (C2L)	12453435	1	1118.00	PANEL, RF LIFT OFF (PRIMED) (NON–TRANSPARENT)
97–02	Y07	10252874	1	21.15	RETAINER, RF LIFT OFF PNL/WDO RR W/STR
97–02	Y07	20538173	4	3.45	RETAINER, RF LIFT OFF PNL/WDO RR W/STR (PUSH IN) (#83) (BLACK) (4.8 HOLE) (14.635)
99–02	Y	10127825	2	.74	SPACER, RF PNL (NEUTRAL) (6.5MM) (10.027)
00	Y37	10445128	2	3.45	SPACER, RF PNL
00	Y37	10445128	2	3.45	SPACER, RF PNL
97	Y07	10415918	1	80.50	WEATHERSTRIP, RF LIFT OFF PNL/WDO RR
98–02	Y07	10415918	[illegible]	80.50	WEATHERSTRIP, RF LIFT OFF PNL/WDO RR

12.811 BOLT – BUMPER – COVER – LATCH – RETAINER – STRIKER, Roof Ventilation

97–02	Y07 CLEAR ROOF PANEL (CC3), REMOVABLE SUNROOF (CF7)	10267173	2	3.05	COVER, RF LIFT OFF PNL/WDO LAT TR
97–02	Y07 DUAL REMOVEABLE ROOF (C2L)	10267173	4	3.05	COVER, RF LIFT OFF PNL/WDO LAT TR
97–02	Y07 CLEAR ROOF PANEL (CC3), REMOVABLE SUNROOF (CF7)	10275882	1	7.95	COVER, RF LIFT OFF PNL/WDO LAT TR (RR CTR CVR)
97–02	Y07 DUAL REMOVEABLE ROOF (C2L)	10275882	2	7.95	COVER, RF LIFT OFF PNL/WDO LAT TR (RR CTR CVR)
98–02	Y67	10267173	2	3.05	COVER, RF LIFT OFF PNL/WDO LAT TR
97–02	Y07	10263229	LH	31.00	STRIKER, RF LIFT OFF PNL/WDO FRT
97–02	Y07	10263230	RH	31.00	STRIKER, RF LIFT OFF PNL/WDO FRT
97–02	Y07	10263234	1	9.35	STRIKER, RF LIFT OFF PNL/WDO RR

12.840 NUT – PANEL, Front Body Hinge Pillar

97–02	Y	10281493	AR	*1.00	NUT, BODY H/PLR INR PNL (03.015)
97–02	Y	27000835	13	3.33	NUT, BODY H/PLR INR UPR PNL (INSERT M8X1.25) (STEEL) (06.760)

cardiagn.com

12.895 PANEL – SEAL, Front Door Inner/Outer Panel

97–02	Y	12529725	LH	291.00	PANEL, FRT S/D OTR
97–02	Y	88894418	RH	291.00	PANEL, FRT S/D OTR
98–02	Y	11515174	AR	*1.75	SEAL, FRT S/D INR PNL HOLE (4 1/4"X7 1/2") (TRIM AS REQ'D) (15.492)

13.090 BOLT – CLIP – CONNECTOR – GROMMET – HARNESS – RETAINER – WIRE, Body Wiring

97–02	Y	21020632	4	3.33	CLIP, BODY FRT WRG HARN
97	Y07	21020632	11	3.33	CLIP, BODY RR WRG HARN
98–02	Y	21020632	7	3.33	CLIP, BODY RR WRG HARN
97	Y	21020632	11	3.33	CLIP, BODY WRG HARN
98	Y67	12085481	1	18.12	CONNECTOR, INLINE–TO F/TOP HARN (BLACK) (2–WAY M W/LEADS) (02.535) (AC–DELCO #PT103)
98–00	Y67	12125621	1	15.46	CONNECTOR, INLINE–TO F/TOP HARN (2–WAY F) (W/LEADS) (12.243) (AC–DELCO #PT533)
01–02	YY67	12125621	1	15.46	CONNECTOR, INLINE–TO F/TOP HARN (2–WAY F) (W/LEADS) (12.243) (AC–DELCO #PT533)
97–02	Y	10412644	2	8.81	GROMMET, S/D WRG (LH & RH)
97–98	Y07	12189550	1	244.62	HARNESS, BODY FRT WRG
98	Y67 SPEAKER SYSTEM 6 (UZ6)	12189958	1	244.62	HARNESS, BODY FRT WRG
98–00	Y07 (EXC MULTIPLE CD PLYR (U1S)	12189597	1	244.62	HARNESS, BODY FRT WRG
99–00	Y07 MULTIPLE CD PLYR (U1S)	12189889	1	244.62	HARNESS, BODY FRT WRG
99–00	Y37 MULTIPLE CD PLYR (U1S)	12163772	1	244.62	HARNESS, BODY FRT WRG
99–00	Y37 (EXC MULTIPLE CD PLYR (U1S)	12189595	1	510.00	HARNESS, BODY FRT WRG
99–00	Y67 (EXC MULTIPLE CD PLYR (U1S)	12189599	1	244.62	HARNESS, BODY FRT WRG
99–00	Y67 MULTIPLE CD PLYR (U1S)	12189962	1	244.62	HARNESS, BODY FRT WRG
01–02	YY07 SPEAKER SYSTEM 6 (UZ6), (EXC MULTIPLE CD PLYR (U1S)	15329382	1		HARNESS, BODY FRT WRG
01–02	YY07 SPEAKER SYSTEM 6 (UZ6), MULTIPLE CD PLYR (U1S)	15329383	1	244.62	HARNESS, BODY FRT WRG
01–02	YY37	15329378	1		HARNESS, BODY FRT WRG
01–02	YY67 SPEAKER SYSTEM 6 (UZ6), (EXC MULTIPLE CD PLYR (U1S)	15329386	1	244.62	HARNESS, BODY FRT WRG
01–02	YY67 SPEAKER SYSTEM 6 (UZ6), MULTIPLE CD PLYR (U1S)	15329387	1	244.62	HARNESS, BODY FRT WRG
97–02	Y07 (EXC TAIL & S/LP (T89) (EXPORT), SPECIAL TAIL & S/LP (T93)	12130411	1	251.96	HARNESS, BODY RR WRG
98–99	Y67 (EXC TAIL & S/LP (T89) (EXPORT), SPECIAL TAIL & S/LP (T93)	12189532	1	526.79	HARNESS, BODY RR WRG
99	Y37 (EXC TAIL & S/LP (T89) (EXPORT), SPECIAL TAIL & S/LP (T93)	12189532	1	526.79	HARNESS, BODY RR WRG
00–02	Y07 SPECIAL TAIL & S/LP (T93), (EXC TAIL & S/LP (T89) (EXPORT)	12189885	1	526.79	HARNESS, BODY RR WRG
00–02	Y37–67 (EXC TAIL & S/LP (T89) (EXPORT), SPECIAL TAIL & S/LP (T93)	12189532	1	526.79	HARNESS, BODY RR WRG
00–02	Y37- 67 SPECIAL TAIL & S/LP (T93), (EXC TAIL & S/LP (T89) (EXPORT)	12189534	1	526.79	HARNESS, BODY RR WRG
97–98	Y CONVENIENCE PKG (AAB), MAN RECL FRT BKT ST, DELUXE (AR9)	10410580	1	66.23	HARNESS, D/SEAT ADJR WRG

cardiagn.com

13.090 BOLT – CLIP – CONNECTOR – GROMMET – HARNESS – RETAINER – WIRE, Body Wiring(Con't)

97	Y07 MAN RECL FRT BKT ST, DELUXE (AR9), (EXC CONVENIENCE PKG (AAB)	10410691	1	66.23	HARNESS, D/SEAT ADJR WRG .....
98–00	Y07–67 MAN RECL FRT BKT ST, DELUXE (AR9), (EXC CONVENIENCE PKG (AAB)	10410691	1	66.23	HARNESS, D/SEAT ADJR WRG .....
99–00	Y07–67 CONVENIENCE PKG (AAB), MAN RECL FRT BKT ST, DELUXE (AR9), (EXC T&T WHL (N37)	10410580	1	66.23	HARNESS, D/SEAT ADJR WRG .....
99–00	Y07–67 CONVENIENCE PKG (AAB), MAN RECL FRT BKT ST, DELUXE (AR9), T&T WHL (N37) ...	12455471	1	66.23	HARNESS, D/SEAT ADJR WRG .....
99–00	Y37 6–WAY PWR D/SEAT ADJR (AG1), MAN RECL FRT BKT ST, DELUXE (AR9), (EXC CONVENIENCE PKG (AAB)	10410691	1	66.23	HARNESS, D/SEAT ADJR WRG .....
01–02	Y07–67 MAN RECL FRT BKT ST, DELUXE (AR9)	10410691	1	66.23	HARNESS, D/SEAT ADJR WRG .....
01	Y37 CONVENIENCE PKG (AAB), MAN RECL FRT BKT ST, DELUXE (AR9)	10410580	1	66.23	HARNESS, D/SEAT ADJR WRG .....
01–02	Y37 MAN RECL FRT BKT ST, DELUXE (AR9), (EXC CONVENIENCE PKG (AAB)	10410691	1	66.23	HARNESS, D/SEAT ADJR WRG .....
02	YY37 CONVENIENCE PKG (AAB), MAN RECL FRT BKT ST, DELUXE (AR9)	10410580	1	66.23	HARNESS, D/SEAT ADJR WRG .....
01–02	Y (EXC I/S RR VIEW MIR (DD6)	12189953	1		HARNESS, DM LP & I/S RR VIEW MIR RDG LP WRG .....
97–00	Y	12163314	LH	263.90	HARNESS, DR LK & O/S RRVIEW MIR MEMORY INTERFACE MDL WRG ....
97–99	Y	12163315	RH	263.90	HARNESS, DR LK & O/S RRVIEW MIR MEMORY INTERFACE MDL WRG ....
00–02	Y SPECIAL TAIL & S/LP (T93)	12163315	RH	263.90	HARNESS, DR LK & O/S RRVIEW MIR MEMORY INTERFACE MDL WRG ....
01–02	Y ELEC R/CON HTD MIR (DL8)	12163314	LH	263.90	HARNESS, DR LK & O/S RRVIEW MIR MEMORY INTERFACE MDL WRG ....
01–02	Y O/S ELEC R/CON MIR (DD0)	12189556	LH	263.90	HARNESS, DR LK & O/S RRVIEW MIR MEMORY INTERFACE MDL WRG ....
01–02	Y EUROPEAN PROVISIONS (VD1) (EXPORT)	10441963	1		HARNESS, KEYLESS ENTRY WRG (ELEMENT) ....
97	Y07 6–WAY PWR P/SEAT ADJR (AG2), MAN RECL FRT BKT ST, DELUXE (AR9)	10410692	1	53.81	HARNESS, P/SEAT ADJR WRG .....
98–01	Y07–67 6–WAY PWR P/SEAT ADJR (AG2), MAN RECL FRT BKT ST, DELUXE (AR9)	10410692	1	53.81	HARNESS, P/SEAT ADJR WRG .....
99–00	Y	12020833	1	*.76	RETAINER, BODY WRG HARN CONN (GRAY) (PUSH–IN) (1" LONG) (02.559) .....
97–02	Y	21020632	6	3.33	RETAINER, DR WRG HARN .....
98	Y67	12130419	1	59.12	WIRE, CONV TOP .....
	*EXPORT**********EXPORT**********EXPORT**********EXPORT**********EXPORT*				
97–01	Y07 TAIL & S/LP (T89) (EXPORT), (EXC SPECIAL TAIL & S/LP (T93) ..	12130413	1	244.62	HARNESS, BODY RR WRG .....
97–99	Y07 SPECIAL TAIL & S/LP (T93), (EXC TAIL & S/LP (T89) (EXPORT) .	12189885	1	526.79	HARNESS, BODY RR WRG .....
98	Y67 TAIL & S/LP (T89) (EXPORT), (EXC SPECIAL TAIL & S/LP (T93) ..	12189533	1	526.79	HARNESS, BODY RR WRG .....

cardiagn.com

13.090 BOLT – CLIP – CONNECTOR – GROMMET – HARNESS – RETAINER – WIRE, Body Wiring(Con't)

98–99	Y67 SPECIAL TAIL & S/LP (T93), (EXC TAIL & S/LP (T89) (EXPORT) .	12189534	1	526.79	HARNESS, BODY RR WRG .....
99	Y37 SPECIAL TAIL & S/LP (T93), (EXC TAIL & S/LP (T89) (EXPORT) .	12189534	1	526.79	HARNESS, BODY RR WRG .....
99–02	Y37–67 TAIL & S/LP (T89) (EXPORT), (EXC SPECIAL TAIL & S/LP (T93)	12189533	1	526.79	HARNESS, BODY RR WRG .....
99–02	Y EUROPEAN PROVISIONS (VD1) (EXPORT)	12020833	1	*.76	RETAINER, BODY FRT WRG HARN CONN (GRAY) (PUSH–IN) (1" LONG) (02.559) .....

13.100 CONNECTOR, Body Wiring

97–02	Y	12085536	1	29.85	CONNECTOR, INLINE–TO BODY HARN (BLACK) (4–WAY M) (W/LEADS) (02.535) (AC–DELCO #PT144) .....
97	Y	12101822	1	33.42	CONNECTOR, INLINE–TO BODY HARN (GRAY) (8–WAY F) (W/LEADS) (02.535) (AC–DELCO #PT214) .....
97	Y	12101876	1	27.54	CONNECTOR, INLINE–TO BODY HARN (6–WAY M) (W/LEADS) (02.535) (AC–DELCO #PT267) .....
97	Y	15305888	1	30.36	CONNECTOR, INLINE–TO BODY HARN (6–WAY F W/LEADS) (13.090) (AC–DELCO #PT1032) ..... .
01–02	Y EUROPEAN PROVISIONS (VD1) (EXPORT)	12047817	1	1.73	CONNECTOR, INLINE–TO BODY HARN (BLUE) (4–WAY M) (W/O LEADS) (09.656) .....
01–02	Y	12117271	1	59.43	CONNECTOR, INLINE–TO BODY HARN (WHITE) (8–WAY F W/LEADS) (02.535) (AC–DELCO #PT444) .....
02	YY67 4–SPD A/TRANS (M30), A/C FRT AUTO/AUX CONT (CJ2), T&T WHL (N37), (EXC TAIL & S/LP (T89) (EXPORT)	12085536	1	29.85	CONNECTOR, INLINE–TO BODY HARN (BLACK) (4–WAY M) (W/LEADS) (02.535) (AC–DELCO #PT144) .....
97–02	Y	12103188	1	1.89	CONNECTOR, INLINE–TO DR HARN (10–WAY MALE M/P 150 W/O LEADS. (BLUE) .) (BLUE) (10–WAY M, W/O LEADS) (02.530) .....
97–02	Y	15305872	1	33.15	CONNECTOR, INLINE–TO DR HARN (RR) (BLACK) (6–WAY M W/LEADS) (AC–DELCO #PT1013) .....
99	Y	12101827	1	37.50	CONNECTOR, INLINE–TO DR HARN (8–WAY M) (W/LEADS) (02.535) (AC–DELCO #PT219) .....
02	YY67 4–SPD A/TRANS (M30), A/C FRT AUTO/AUX CONT (CJ2), T&T WHL (N37), (EXC TAIL & S/LP (T89) (EXPORT)	12103188	1	1.89	CONNECTOR, INLINE–TO DR HARN (10–WAY MALE M/P 150 W/O LEADS. (BLUE)) (BLUE) (10–WAY M, W/O LEADS) (02.530) .....
02	YY67 4–SPD A/TRANS (M30), A/C FRT AUTO/AUX CONT (CJ2), T&T WHL (N37), (EXC TAIL & S/LP (T89) (EXPORT)	15305872	1	33.15	CONNECTOR, INLINE–TO DR HARN (RR) (BLACK) (6–WAY M W/LEADS) (AC–DELCO #PT1013) ....
97–02	Y	12101855	2	20.56	CONNECTOR, INLINE–TO DR LK ACTR MOT (2–WAY F) (W/LEADS) (W/SEAL) (02.535) (AC–DELCO #PT247) .....

cardiagn.com

13.100 CONNECTOR, Body Wiring(Con't)

97-02	Y	12085536	1	29.85	CONNECTOR, INLINE-TO O/S RR VIEW MIR (BLACK) (4-WAY M) (W/LEADS) (02.535) (AC-DELCO #PT144)
97-02	Y	12101827	2	37.50	CONNECTOR, INLINE-TO O/S RR VIEW MIR (8-WAY M) (W/LEADS) (02.535) (AC-DELCO #PT219)
97-02	Y	15305872	1	33.15	CONNECTOR, INLINE-TO PWR ST (RR) (BLACK) (6-WAY M W/LEADS) (AC-DELCO #PT1013)
02	YY67 4-SPD A/TRANS (M30), A/C FRT AUTO/AUX CONT (CJ2), T&T WHL (N37), (EXC TAIL & S/LP (T89) (EXPORT)	15305872	1	33.15	CONNECTOR, INLINE-TO PWR ST (RR) (BLACK) (6-WAY M W/LEADS) (AC-DELCO #PT1013)
97-02	Y	12101825	2	18.01	CONNECTOR, INLINE-TO R/CMPT LID LAT REL SOL (GRAY) (2-WAY F W/LEADS) (INDEX TAB CTR CAVITY A&B) (02.535) (AC-DELCO #PT217)
97-02	Y	12117271	1	59.43	CONNECTOR, INLINE-TO RR BODY HARN (WHITE) (8-WAY F W/LEADS) (02.535) (AC-DELCO #PT444)
97-02	Y	12085481	2	18.12	CONNECTOR, INLINE-TO S/S MIR LP (BLACK) (2-WAY M W/LEADS) (02.535) (AC-DELCO #PT103)
99	Y	12101822	1	33.42	CONNECTOR, INLINE-TO S/S MIR LP (GRAY) (8-WAY F) (W/LEADS) (02.535) (AC-DELCO #PT214)
99	Y07-67	12101827	1	37.50	CONNECTOR, INLINE-TO S/S MIR LP (8-WAY M) (W/LEADS) (02.535) (AC-DELCO #PT219)
01-02	Y	12101822	1	33.42	CONNECTOR, INLINE-TO S/S MIR LP (GRAY) (8-WAY F) (W/LEADS) (02.535) (AC-DELCO #PT214)
97	Y	12085481	2	18.12	CONNECTOR, INLINE-TO ST BELT SW (BLACK) (2-WAY M W/LEADS) (02.535) (AC-DELCO #PT103)
97-02	Y	12126487	1	38.52	CONNECTOR, SW-DR AJAR IND (4-WAY F) (W/LEADS) (02.383) (AC-DELCO #PT757)

13.346 NUT - TOP - WEATHERSTRIP, Convertible and Hard Top

97	Y	10237960	6	.46	NUT, R/TOP BOLT GDE (M6X1.0) (10.512)
98-02	Y	10410398	6	*.51	NUT, R/TOP BOLT GDE (M6X1.0 ITR "D" THD) (10.512)
98-00	Y67 CONV ROOF (C05), (41T)	10445454	1	3177.00	TOP, FLDG (BLACK)
01-02	Y67 CONV ROOF (C05), (41T)	10306244	1	3177.00	TOP, FLDG (BLACK)
01-02	Y67 CONV ROOF (C05), VINYL TOP, DK ANTELOPE MET (67T)	10306245	1	3177.00	TOP, FLDG (METALLIC)
01-02	Y67 CONV ROOF (C05), (16T)	10306246	1	3177.00	TOP, FLDG (WHITE)
98-02	Y67 CONV ROOF (C05)	10446851	1	83.00	WEATHERSTRIP, F/TOP RR

14.865 BOLT - BRACKET - COIL - COIL KIT - CONNECTOR - HARNESS - INDICATOR - MODULE - NUT - RETAINER - SENSOR - SWITCH - SWITCH KIT - WASHER, Inflatable Restraint System

97	Y07	11514139	2	*1.08	BOLT, F/END INFL RST DISCRM SEN (M6X1X25) (08.900)
98	Y	11514139	2	*1.08	BOLT, F/END INFL RST DISCRM SEN (POS#2) (M6X1X25) (08.900)
98-99	Y F/SEAT INFL RST SYS (AK5)	11514139	2	*1.08	BOLT, F/END INFL RST DISCRM SEN (M6X1X25) (08.900)

cardiagn.com

14.865 BOLT – BRACKET – COIL – COIL KIT – CONNECTOR – HARNESS – INDICATOR – MODULE – NUT – RETAINER – SENSOR – SWITCH – SWITCH KIT – WASHER, Inflatable Restraint System(Con't)

97–02	Y F/SEAT INFL RST SYS (AK5)	11514623	3	*.96	BOLT, INFL RST DIAGN ENGY RESV MDL (M6X1X20) (08.900) .....
97–02	Y F/SEAT INFL RST SYS (AK5)	10406983	2	12.50	BOLT, STRG WHL INFL RST MDL .....
97–00	Y F/SEAT INFL RST SYS (AK5)	10437332	1	104.00	BRACKET, I/P INFL RST MDL (#50) ....
01–02	Y F/SEAT INFL RST SYS (AK5)	10437332	1	104.00	BRACKET, I/P INFL RST MDL (#50) ....
97–98	Y	26087359	1	78.00	COIL KIT, INFL RST STRG WHL MDL ...
99–01	Y	26069710	1	78.25	COIL, STRG WHL INFL RST MDL .....
02	Y	26095710	1	78.25	COIL, STRG WHL INFL RST MDL .....
97–98	Y	12167147	1	27.81	CONNECTOR, INFL RST F/END DISCM SEN (2–WAY F, W/LEADS) (16.712) (AC–DELCO #PT811) .....
99–01	YY67	15306044	1	21.52	CONNECTOR, INFL–INFL RST (2–WAY F) (W/LEADS) (AC–DELCO #PT1204) ....
01	YY67	12102101	1	51.51	CONNECTOR, INFL–INFL RST (2–WAY M) (W/4 LEADS..2 IN BOTH CAV A & B) .....
02	YY67	12102101	1	51.51	CONNECTOR, INFL–INFL RST (2–WAY M) (W/4 LEADS..2 IN BOTH CAV A & B) .....
02	YY67	15306044	1	21.52	CONNECTOR, INFL–INFL RST (2–WAY FEMALE M/P 150 (W/LEADS) .) (2–WAY F) (W/LEADS) (AC–DELCO #PT1204) .....
97–98	Y	12085486	1	53.04	CONNECTOR, INLINE–TO INFL RST HARN (BLACK) (10–WAY F) (W/LEADS) (02.535) (AC–DELCO #PT108) .....
01–02	YY67	12102101	1	51.51	CONNECTOR, INLINE–TO INFL RST HARN (2–WAY M) (W/4 LEADS..2 IN BOTH CAV A & B) .....
01–02	YY67	12126498	1	44.37	CONNECTOR, INLINE–TO INFL RST HARN (2–WAY FEMALE M/P 280. CONSISTS OF 12077921 W/LEADS.) (2–WAY F) (W/LEADS) (AC–DELCO #PT767) ....
97–00	Y	12126040	1	60.44	CONNECTOR, INLINE–TO INFL RST I/P MDL (2–WAY M) (W/LEADS) .....
97–00	Y	12126498	1	44.37	CONNECTOR, INLINE–TO INFL RST I/P MDL (2–WAY F) (W/LEADS) (AC–DELCO #PT767) .....
97–98	Y	12126039	1	50.49	CONNECTOR, INLINE–TO INFL RST STRG WHL MDL COIL (2–WAY M) (W/2 LEADS, IF 4 LEADS REQ USE 12126494) (AC–DELCO #PT1217) ..
99–02	Y	12102101	1	51.51	CONNECTOR, INLINE–TO INFL RST STRG WHL MDL COIL (2–WAY M) (W/4 LEADS..2 IN BOTH CAV A & B) .
97–98	Y	15305963	1	61.20	CONNECTOR, MDL–INFL RST DIAGN ENGY RESV (AC–DELCO #PT1099) .
97–98	Y	12126040	1	60.44	CONNECTOR, MDL–INFL RST I/P (2–WAY M) (W/LEADS) .....
99–01	Y	15306044	1	21.52	CONNECTOR, MDL–INFL RST I/P (2–WAY F) (W/LEADS) (AC–DELCO #PT1204) .....
99–02	Y	15306322	1	78.54	CONNECTOR, MDL–INFL RST SEN & DIAGN (AC–DELCO #PT1376) .....

cardiagn.com

14.865 BOLT – BRACKET – COIL – COIL KIT – CONNECTOR – HARNESS – INDICATOR – MODULE – NUT – RETAINER – SENSOR – SWITCH – SWITCH KIT – WASHER, Inflatable Restraint System(Con't)

00	Y07 4-SPD A/TRANS (M30), A/C FRT AUTO/AUX CONT (CJ2), ACTIVE BRAKE CTL (JL4), (EXC TAIL & S/L.P (T89) (EXPORT)	15306014	1	30.36	CONNECTOR, SW-INFL RST I/P MDL (6-WAY FEMALE M/P 150) (W/LEADS) (16.712) (AC-DELCO #PT1141) .....
01-02	YY	12085535	1	18.01	CONNECTOR, SW-INFL RST I/P MDL (2-WAY F W/LEADS W/INDEX TAB OTR EDGE OF CAVITY B) (02.535) (AC-DELCO #PT146) .....
01-02	YY67	15306014	1	30.36	CONNECTOR, SW-INFL RST I/P MDL (6-WAY FEMALE M/P 150 (W/LEADS) .) (6-WAY FEMALE M/P 150) (W/LEADS) (16.712) (AC-DELCO #PT1141) .....
02	YY67 4-SPD A/TRANS (M30), A/C FRT AUTO/AUX CONT (CJ2), T&T WHL (N37), (EXC TAIL & S/LP (T89) (EXPORT)	12085535	1	18.01	CONNECTOR, SW-INFL RST I/P MDL (2-WAY F W/LEADS W/INDEX TAB OTR EDGE OF CAVITY B) (02.535) (AC-DELCO #PT146) .....
97	Y F/SEAT INFL RST SYS (AK5)	10407332	1	638.00	MODULE, I/P INFL RST (MID MOUNT, MORTON 10" MDL) .....
98	Y F/SEAT INFL RST SYS (AK5)	10411125	1	638.00	MODULE, I/P INFL RST .....
99-02	Y F/SEAT INFL RST SYS (AK5)	10415724	1	638.00	MODULE, I/P INFL RST .....
97	Y F/SEAT INFL RST SYS (AK5)	09378281	1	399.00	MODULE, INFL RST SEN & DIAG .....
98	Y F/SEAT INFL RST SYS (AK5)	09378281	1	399.00	MODULE, INFL RST SEN & DIAG .....
99	Y F/SEAT INFL RST SYS (AK5)	09380620	1	399.00	MODULE, INFL RST SEN & DIAG .....
00	Y F/SEAT INFL RST SYS (AK5), (C88)	09391990	1	399.00	MODULE, INFL RST SEN & DIAG .....
00	Y07-67 F/SEAT INFL RST SYS (AK5), (EXC C88)	09391830	1	399.00	MODULE, INFL RST SEN & DIAG .....
01-02	Y F/SEAT INFL RST SYS (AK5), (C88)	12209740	1	399.00	MODULE, INFL RST SEN & DIAG .....
97	Y F/SEAT INFL RST SYS (AK5)	10407331	1	638.00	MODULE, STRG WHL INFL RST .....
98	Y F/SEAT INFL RST SYS (AK5)	10411124	1	638.00	MODULE, STRG WHL INFL RST .....
99-02	Y F/SEAT INFL RST SYS (AK5)	10415723	1	638.00	MODULE, STRG WHL INFL RST .....
00-02	Y (C88)	10440761	1	30.50	SWITCH, I/P INFL RST MDL .....
97-02	Y	26011609	1	[illegible]	WASHER, STRG WHL INFL RST MDL COIL .....
	*EXPORT***************EXPORT***************EXPORT***************EXPORT***************EXPORT*				
00-02	Y07-67 F/SEAT INFL RST SYS (AK5), (EXC C88)	12209730	1	399.00	MODULE, INFL RST SEN & DIAG .....

15.100 CARPET – MOLDING – PANEL – RETAINER, Rear Quarter

97-02	Y	10274637	LH	14.60	MOLDING, BODY SI FRT GARN (BLACK) .....
97-02	Y	10274638	RH	14.60	MOLDING, BODY SI FRT GARN (BLACK) .....
99-02	Y37	10258567	LH	80.25	PANEL, BODY SI TR ((BLACK)) .....
99-02	Y37	10258568	RH	80.25	PANEL, BODY SI TR (BLACK) .....
97-02	Y	15748479	2	*.62	RETAINER, BODY SI FRT G/MLDG (13.0MM WIDE) (YELLOW) (U-BASE) (16.575) .....
99-02	Y37	00332364	2	*.52	RETAINER, BODY SI T/PNL (08.154) ...
99-02	Y37	10417444	2	3.33	RETAINER, BODY SI T/PNL .....
99-02	Y37	15748479	8	*.62	RETAINER, BODY SI T/PNL (13.0MM WIDE) (YELLOW) (U-BASE) (16.575)

cardiagn.com

ILLUSTRATION INDEX

	TITLE	GRID
1997	Y07 MOLDINGS/BODY	6-C4
1998-2002	Y07-67 MOLDINGS/BODY	6-C4
1999-2000	Y37 MOLDINGS/BODY	6-C6
2001-2002	Y37 MOLDINGS/BODY	6-C8
1998	Y67 STRIPES/BODY (INDY PACE CAR)(Z4Z)	6-C10
1997-1998	Y07 REAR COMPARTMENT LID HARDWARE	6-C12
1998-2002	Y67 REAR COMPARTMENT LID HARDWARE	6-C15
1999-2000	Y07 REAR COMPARTMENT LID HARDWARE	6-C18
1999-2000	Y37 REAR COMPARTMENT LID HARDWARE	6-C21
2001-2002	Y07 REAR COMPARTMENT LID HARDWARE	6-C23
2001-2002	Y37 REAR COMPARTMENT LID HARDWARE	6-C26
1997	Y SHEET METAL/BODY PART 3 (BUMPER BARS,TUNNEL,RAILS)	6-D2
1997-2002	Y SHEET METAL/BODY PART 1 (DASH PANEL,H/PLR,WINDSHIELD)	6-D5
1997-2002	Y07 SHEET METAL/BODY PART 2 (FLOOR PANEL,BODY L/PLR,ROOF,R/CMPT)	6-D8
1998	Y SHEET METAL/BODY PART 3 (BUMPER BARS,TUNNEL,RAILS)	6-D14
1998-2002	Y67 SHEET METAL/BODY PART 2 (FLOOR PANEL,BODY L/PLR,ROOF,R/CMPT)	6-D17
1999-2001	Y37 SHEET METAL/BODY PART 2 (FLOOR PANEL,BODY L/PLR,ROOF,R/CMPT)	6-D23
1999-2002	Y SHEET METAL/BODY PART 3 (BUMPER BARS,TUNNEL,RAILS)	6-E2
2002	Y37 SHEET METAL/BODY PART 2 (FLOOR PANEL,BODY L/PLR,ROOF,R/CMPT)	6-E5
1997-2002	Y07 ROOF HARDWARE/LIFT OFF PANELS (C2L,CC3,CF7)	6-E8
1997-2002	Y07 BODY/REAR (QUARTER & LIFT WDO)	6-E14
1998-2002	Y67 BODY/REAR (QUARTER & LID)	6-E17
1999-2002	Y37 BODY/REAR (QUARTER & LID)	6-E20
1997-2002	Y07 COMPARTMENT/REAR STORAGE & HARDWARE	6-E24
1998-2002	Y67 COMPARTMENT/REAR STORAGE & HARDWARE	6-E27
1999	Y37 COMPARTMENT/REAR STORAGE & HARDWARE	6-F2
2000	Y37 COMPARTMENT/REAR STORAGE & HARDWARE	6-F4
2001-2002	Y37 COMPARTMENT/REAR STORAGE & HARDWARE	6-F6

cardiagn.com

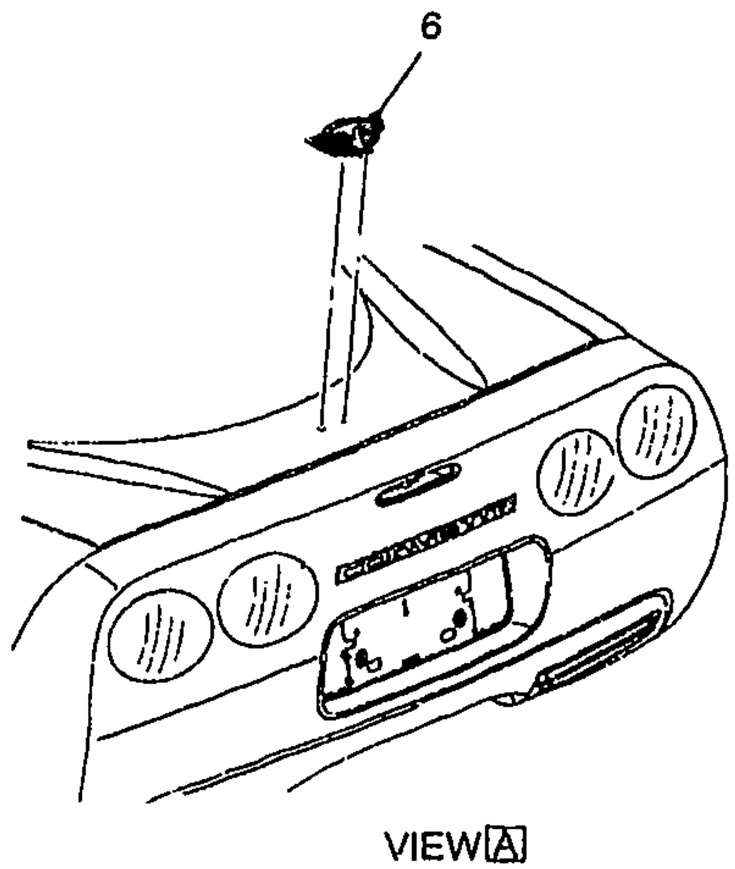

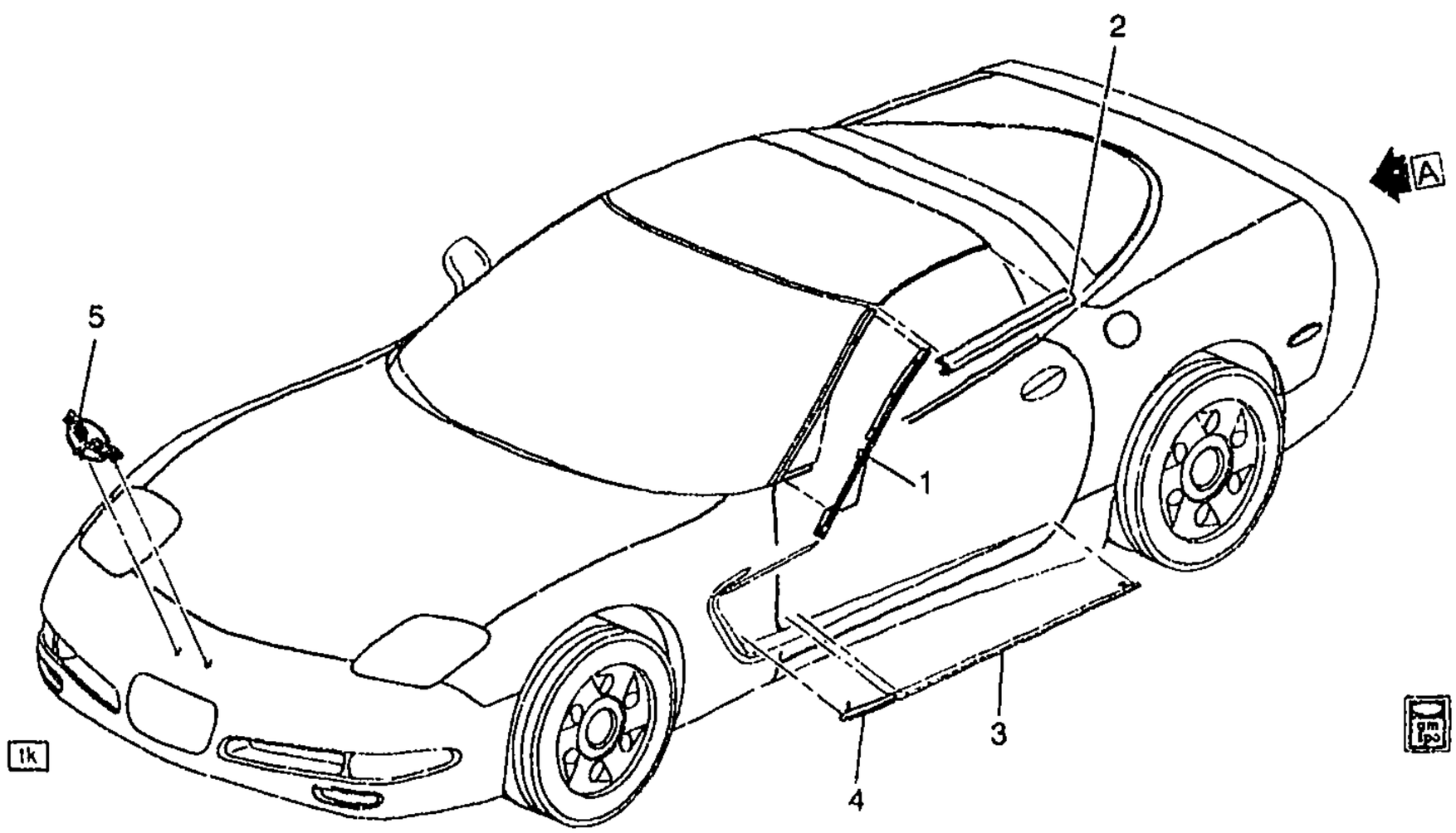

1Y12-007

1997 Y07 MOLDINGS/BODY
1998-2002 Y07-67 MOLDINGS/BODY

1.	6-N16	10.093	MOLDING, W/S SI RVL (BLACK) .	97	Y07	LH	10299306
	6-N16	10.093	MOLDING, W/S SI RVL (BLACK) .	97	Y07	RH	10299307
	6-N16	10.093	MOLDING, W/S SI RVL (BLACK) .	98-02	Y07-67	LH	10299306
	6-N16	10.093	MOLDING, W/S SI RVL (BLACK) .	98-02	Y07-67	RH	10299307

© 2001 GENERAL MOTORS SERVICE PARTS OPERATIONS - CHEVROLET - 15Y

cardiagn.com

							1Y12-007
2.	6-A16	12.810	MOLDING, RF LIFT OFF PNL/WDO RVL (PART OF WDO) (12.075)	97-02	Y07 (CC3, C2L)	LH	10401718
	6-A16	12.810	MOLDING, RF LIFT OFF PNL/WDO RVL (PART OF WDO) (12.075)	97-02	Y07 (CC3, C2L)	RH	10401719
	6-A16	12.810	MOLDING, RF LIFT OFF PNL/WDO RVL (PART OF WDO) .	97-02	Y07 (CF7, C2L)	LH	10438024
	6-A16	12.810	MOLDING, RF LIFT OFF PNL/WDO RVL (PART OF WDO) .	97-02	Y07 (CF7, C2L)	RH	10438025
3.	6-A8	12.112	MOLDING, FRT S/D CTR (WHITE) (PAINT TO MATCH)	97-02	Y (B84)	RH	10427432
	6-A8	12.112	MOLDING, FRT S/D CTR (WHITE) (PAINT TO MATCH)	97-02	Y (B84)	LH	10427433
4.	6-N14	8.132	MOLDING, F/FDR CTR RR	97-02	Y (B84)	RH	10427434
	6-N14	8.132	MOLDING, F/FDR CTR RR	97-02	Y (B84)	LH	10427435
5.	6-N14	7.832	EMBLEM, FRT BPR FASCIA	97-02	Y	1	10258164
6.	6-A10	12.182	EMBLEM, R/CMPT LIFT WDO PNL	97-02	Y	1	10258165

RPO DEFINITIONS
B84 – ORNAMENTATION,EXTERIOR,BODY SIDE MOLDING
CC3 – ROOF,SUN,REMOVEABLE PANELS(TRANSPARENT PLASTIC)
CF7 – ROOF,SUN,REMOVABLE,NON-TRANSPARENT
C2L – ROOF PACKAGE,DUAL REMOVEABLE

cardiagn.com

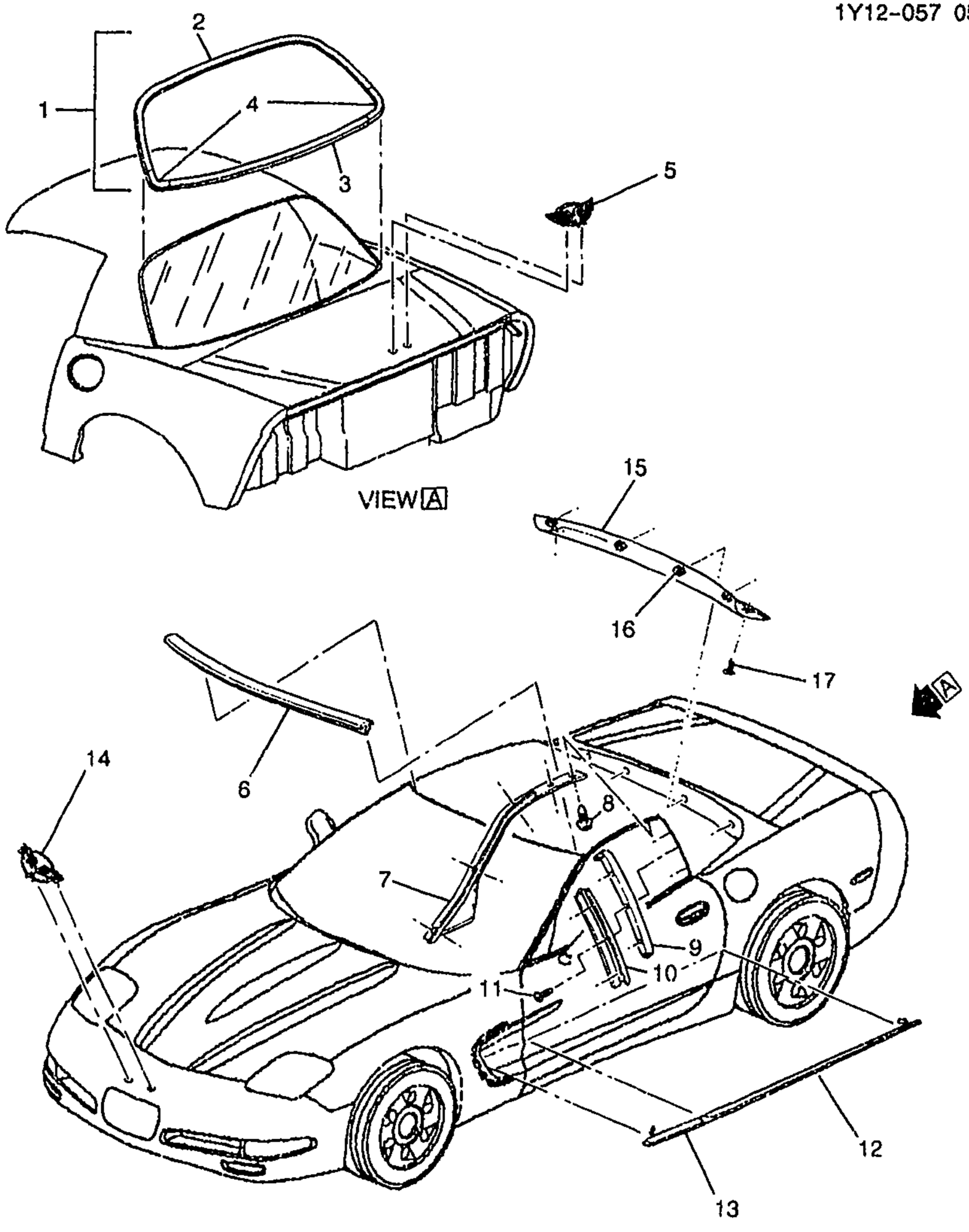

1Y12-057

1999-2000 Y37 MOLDINGS/BODY

1.	6-N23	11.208	MOLDING, R/WDO RVL (INCLS 2, 3, 4)	99-00	Y37	1 10400804
2.		N.S.	MOLDING, R/WDO UPR RVL (PART OF 1)			
3.		N.S.	MOLDING, R/WDO LWR RVL (PART OF 1)			

© 2001 GENERAL MOTORS SERVICE PARTS OPERATIONS-CHEVROLET-15Y

cardiagn.com

						1Y12–057	
4.		N.S.	MOLDING, R/WDO RVL (PART OF 1)				
5.	6–A10	12.182	EMBLEM, R/CMPT LIFT WDO PNL	99–00	Y	1	10258165
6.	6–N16	10.093	MOLDING, W/S UPR RVL	99–00	Y37	1	10427732
7.	6–N16	10.093	MOLDING, W/S SI RVL (BLACK)	99–00	Y37	RH	10422996
	6–N16	10.093	MOLDING, W/S SI RVL (BLACK)	99–00	Y37	LH	10422997
8.		8.977	SCREW, LG RND WA HD W/BLK NYL WA, 4.2X 1.41X13, 11–OD, DRILL PT, 6172, PEOR (W/S SI R/MLDG)	99–00		12	10180421
9.	6–A8	12.113	MOLDING, BODY L/PLR UPR RVL (12.942)	99–00	Y37	RH	10422994
	6–A8	12.113	MOLDING, BODY L/PLR UPR RVL (12.942)	99–00	Y37	LH	10422995
10.	6–N20	10.694	RETAINER, FRT S/D W/STR UPR RR (METAL STRIP RETAINS RR UPR W/STR) (10.695)	99–00	Y37	RH	10419267
	6–N20	10.694	RETAINER, FRT S/D W/STR UPR RR (METAL STRIP RETAINS RR UPR W/STR) (10.695)	99–00	Y37	LH	10419268
11.		8.977	BOLT, RD CROWNED WA HD C/R M4.2X1.41X16POR (FRT S/D WDO RR W/STR RET)	99–00		6	11508231
12.	6–A8	12.112	MOLDING, FRT S/D CTR (WHITE) (PAINT TO MATCH)	99–00	Y (B84)	RH	10427432
	6–A8	12.112	MOLDING, FRT S/D CTR (WHITE) (PAINT TO MATCH)	99–00	Y (B84)	LH	10427433
13.	6–N14	8.132	MOLDING, F/FDR CTR RR	99–00	Y (B84)	RH	10427434
	6–N14	8.132	MOLDING, F/FDR CTR RR	99–00	Y (B84)	LH	10427435
14.	6–N14	7.832	EMBLEM, FRT BPR FASCIA	99–00	Y	1	10255164
15.	6–N25	11.620	MOLDING, R/WDO LWR GARN (INCLS 16) (11.120)	99–00	Y37	1	10258601
16.	6–N23	11.120	RETAINER, R/WDO LWR G/MLDG (PART OF 15) (13.0MM WIDE) (YELLOW) (U–BASE) (16.575)	99–00	Y37	4	15748479
17.		8.950	RETAINER, FITS .250 HOLE, 1.01LG.700–OD NYLON BLACK (R/WDO LWR G/MLDG)	99–00		2	10121502

RPO DEFINITIONS
B84 – ORNAMENTATION,EXTERIOR,BODY SIDE MOLDING

cardiagn.com

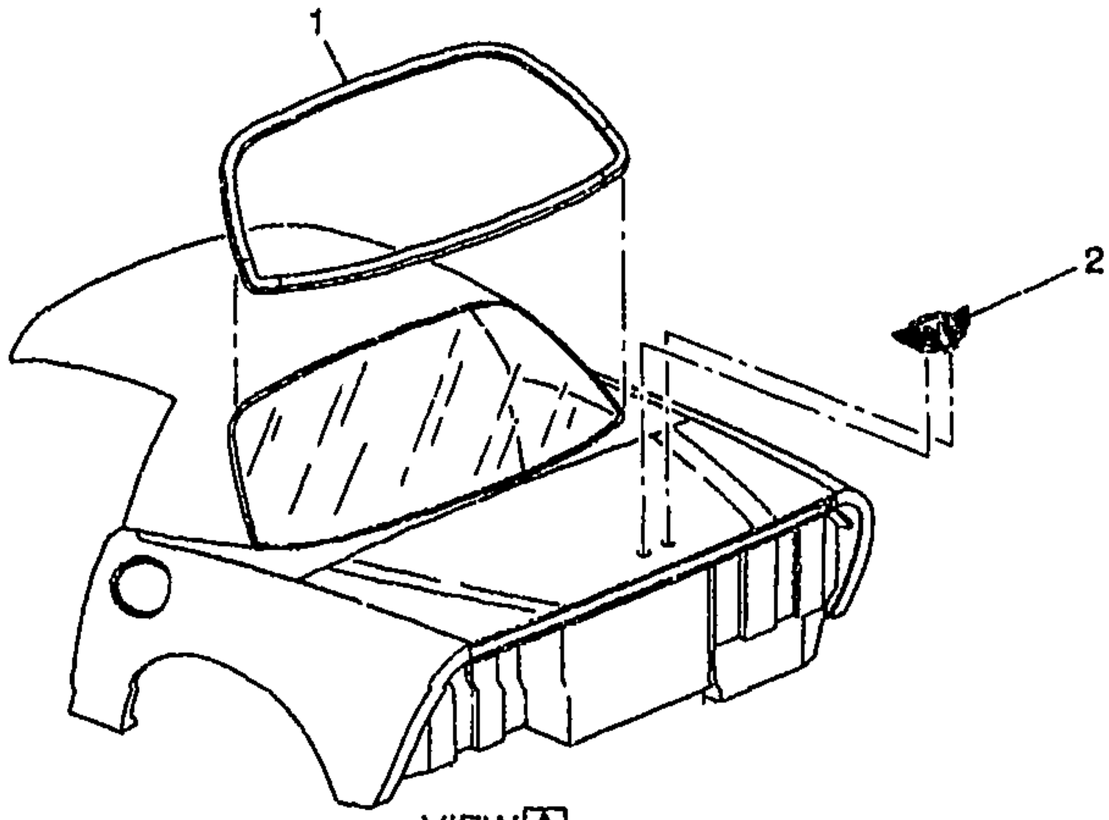

VIEW A

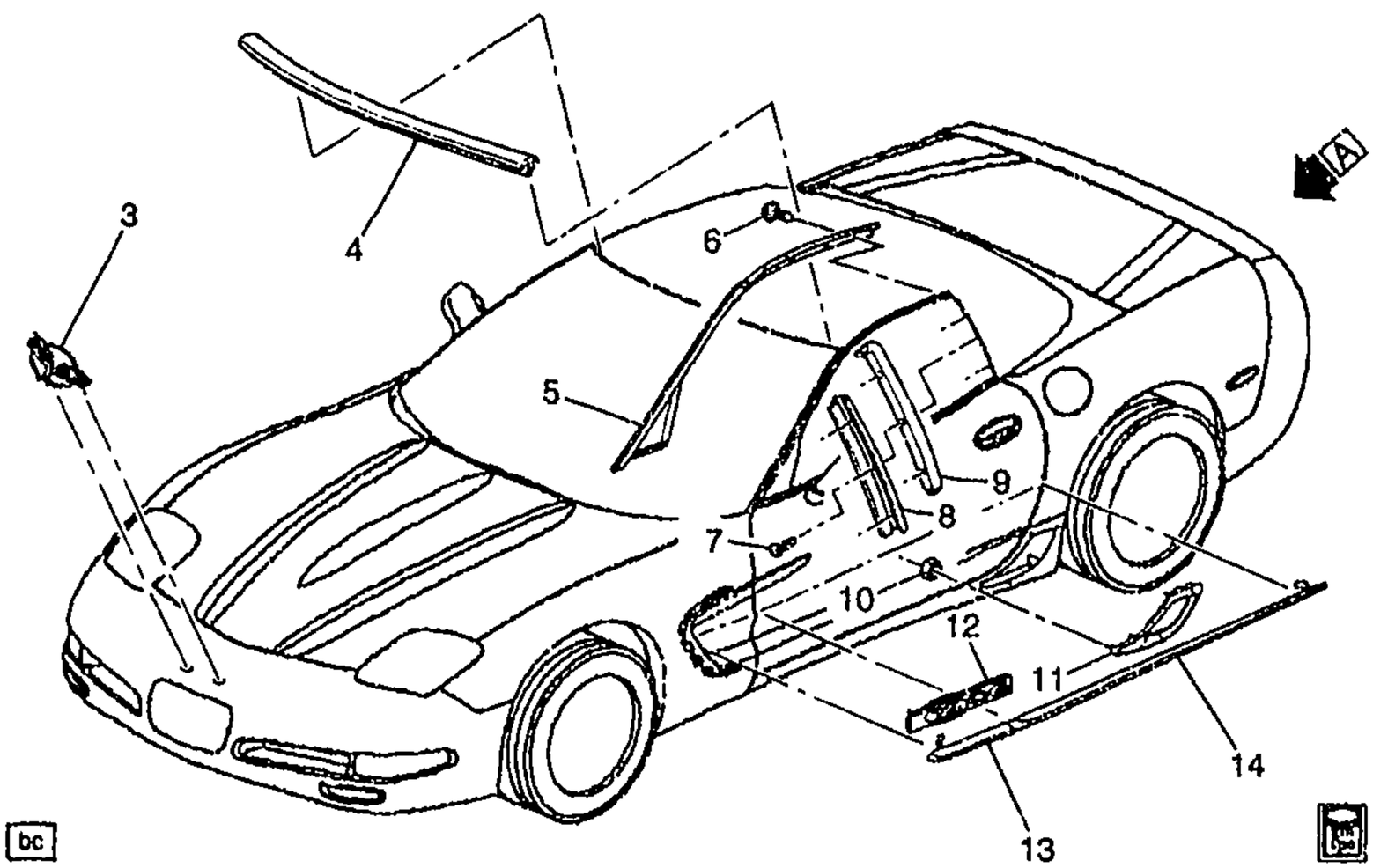

1Y12-068

2001-2002 Y37 MOLDINGS/BODY

1.		N.S.	MOLDING, R/WDO UPR RVL		.....		
2.	6-A10	12.182	EMBLEM, R/CMPT LIFT WDO PNL	01-02	Y	1	10258165
3.	6-N14	7.832	EMBLEM, FRT BPR FASCIA	01-02	Y	1	10258164
4.	6-N16	10.093	MOLDING, W/S UPR RVL	01-02	Y37	1	10427732
5.	6-N16	10.093	MOLDING, W/S SI RVL (BLACK) .	01-02	Y37	RH	10422996
	6-N16	10.093	MOLDING, W/S SI RVL (BLACK) .	01-02	Y37	LH	10422997

© 2001 GENERAL MOTORS SERVICE PARTS OPERATIONS-CHEVROLET-15Y

cardiagn.com

							1Y12-068
6.		8.977	SCREW, LG RND WA HD W/BLK NYL WA, 4.2X 1.41X13, 11-OD, DRILL PT, 6172, PEOR (W/S SI R/MLDG)	01-02		12	10180421
7.		8.977	BOLT, RD CROWNED WA HD C/R M4.2X1.41X16POR (FRT S/D WDO RR W/STR RET)	01-02		6	11508231
8.	6-N20	10.694	RETAINER, FRT S/D W/STR UPR RR (METAL STRIP RETAINS RR UPR W/STR) (10.695)	01-02	Y37	RH	10419267
	6-N20	10.694	RETAINER, FRT S/D W/STR UPR RR (METAL STRIP RETAINS RR UPR W/STR) (10.695)	01-02	Y37	LH	10419268
9.	6-A8	12.113	MOLDING, BODY L/PLR UPR RVL (12.942)	01-02	Y37	RH	10422994
	6-A8	12.113	MOLDING, BODY L/PLR UPR RVL (12.942)	01-02	Y37	LH	10422995
10.		8.917	NUT, CONICAL SPR WA HEX (METRIC STYLE 2) M5 X 0.86N 4 (RR BRK CLPR CLG AIR SCOOP)	01-02		8	11503647
11.	6-N11	4.665	SCOOP, RR BRK CLPR CLG AIR	01-02	Y37	RH	10440858
	6-N11	4.665	SCOOP, RR BRK CLPR CLG AIR	01-02	Y37	LH	10440860
12.	6-N14	8.147	EMBLEM, F/FDR (Z06)	01-02	Y37	2	10429629
	6-N14	8.147	EMBLEM, F/FDR (405 HP)	02	YY37	2	10314089
13.	6-N14	8.132	MOLDING, F/FDR CTR RR	01-02	Y (B84)	RH	10427434
	6-N14	8.132	MOLDING, F/FDR CTR RR	01-02	Y (B84)	LH	10427435
14.	6-A8	12.112	MOLDING, FRT S/D CTR (WHITE) (PAINT TO MATCH)	01-02	Y (B84)	RH	10427432
	6-A8	12.112	MOLDING, FRT S/D CTR (WHITE) (PAINT TO MATCH)	01-02	Y (B84)	LH	10427433

RPO DEFINITIONS
B84 – ORNAMENTATION,EXTERIOR,BODY SIDE MOLDING

cardiagn.com

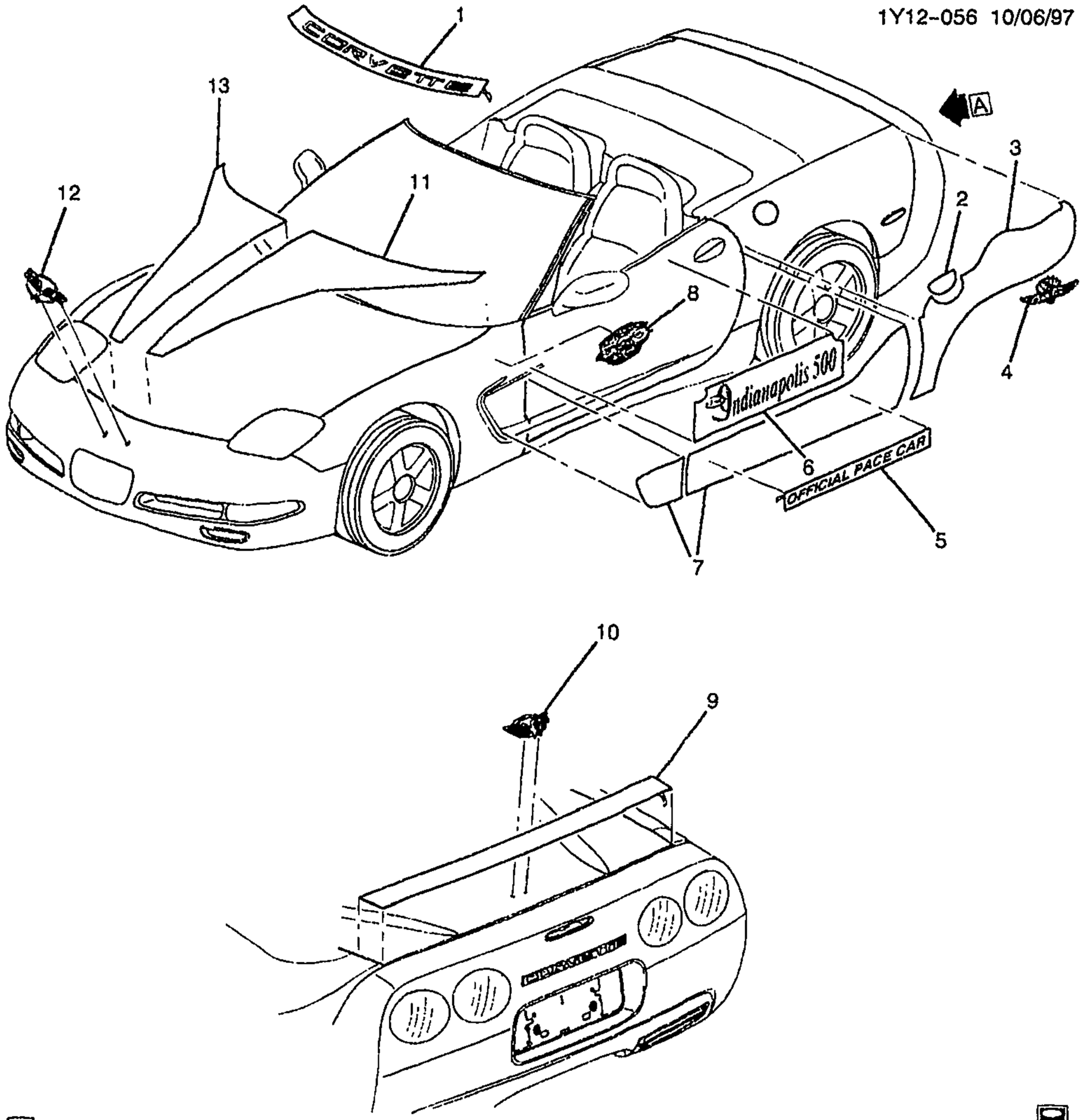

VIEW A

1Y12-056

1998 Y67 STRIPES/BODY (INDY PACE CAR)(Z4Z)

1.	6-N16	10.027	DECAL, W/S NA ("CORVETTE")	98 Y67 (Z4Z)	1	10405316
2.	6-A21	12.945	STRIPE, F/TNK FIL DR	98 Y67 (Z4Z)	1	10405310
3.	6-A8	12.116	STRIPE, R/Q UPR	98 Y67 (Z4Z)	LH	10405308
	6-A8	12.116	STRIPE, R/Q UPR	98 Y67 (Z4Z)	RH	10405309
4.	6-A8	12.116	DECAL, R/Q (WINGS & WHEELS) (12.112)	98 Y67 (Z4Z)	2	10405317

© 2001 GENERAL MOTORS SERVICE PARTS OPERATIONS-CHEVROLET-15Y

cardiagn.com

						1Y12–056	
5.	6–A8	12.112	DECAL, FRT S/D NA ("OFFICIAL PACE CAR")	98	Y67 (Z4Z)	2	10405314
6.	6–A8	12.112	DECAL, FRT S/D UPR (EVENT NAME & DATE)	98	Y67 (Z4Z)	2	10405312
7.	6–N14	8.132	STRIPE, BODY SI FRT	98	Y67 (Z4Z)	LH	10405306
	6–N14	8.132	STRIPE, BODY SI FRT	98	Y67 (Z4Z)	RH	10405307
8.	6–N14	8.147	DECAL, F/FDR RR (PACE CAR) (8.141)	98	Y67 (Z4Z)	2	10412667
9.	6–A10	12.182	STRIPE, R/CMPT LID	98	Y67 (Z4Z)	1	10405311
10.	6–A10	12.182	EMBLEM, R/CMPT LIFT WDO PNL	98	Y	1	10258165
11.	6–N14	8.055	STRIPE, HOOD CTR	98	Y67 (Z4Z)	LH	10405304
12.	6–N14	7.832	EMBLEM, FRT BPR FASCIA	98	Y	1	10258164
13.	6–N14	8.055	STRIPE, HOOD CTR	98	Y67 (Z4Z)	RH	10405305

RPO DEFINITIONS
Z4Z – MERCHANDISED PKG INDY PACE CAR

cardiagn.com

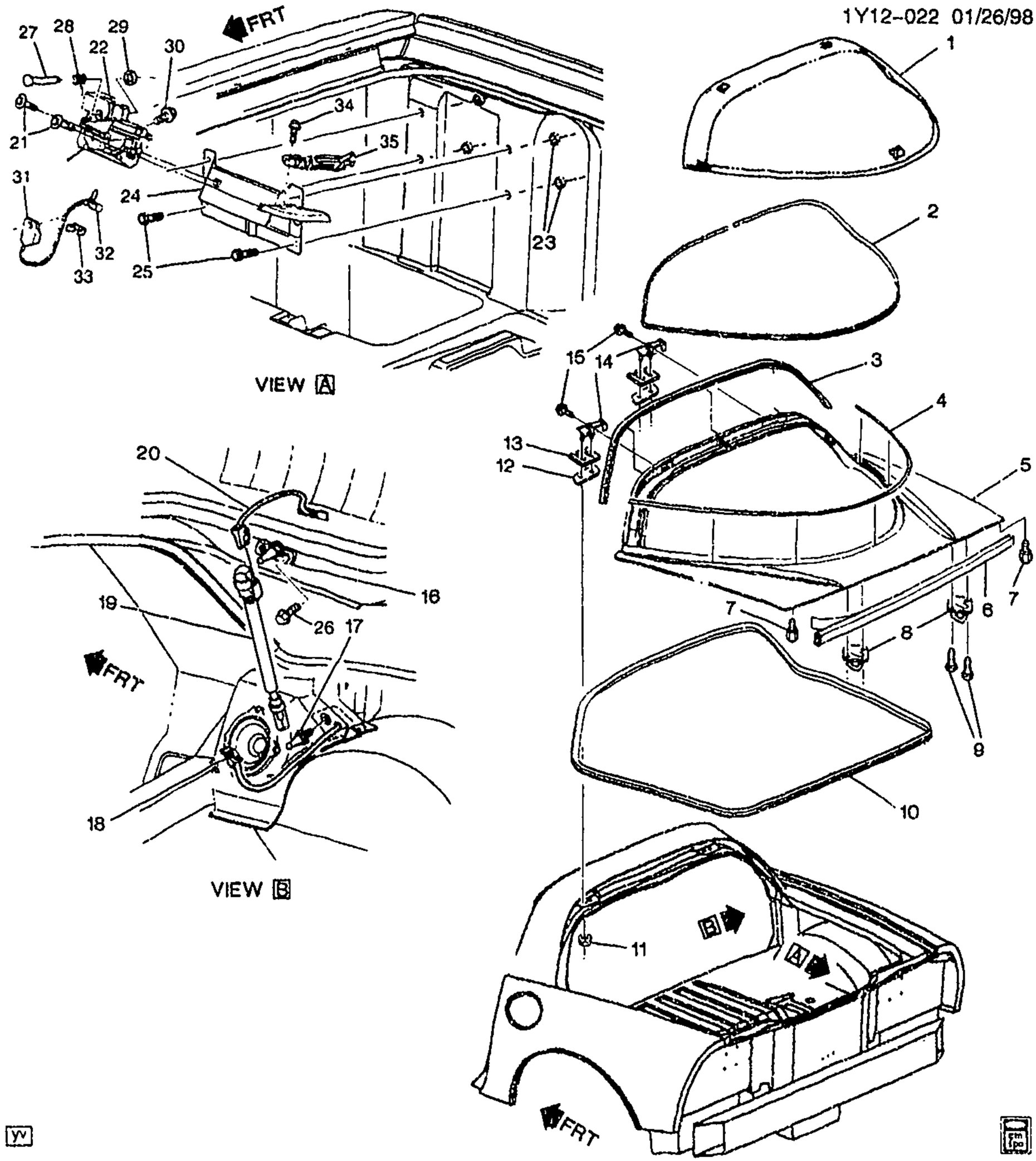

1Y12-022

1997-1998 Y07 REAR COMPARTMENT LID HARDWARE

1.	6-A10	12.180	WINDOW, R/CMPT LIFT (HTCH GLS)	97-98	Y07	1	10247317
2.	6-A14	12.269	SEAL, R/CMPT L/WDO RR AUX (POSN #1)	97-98	Y	1	10401665

cardiagn.com

							1Y12-022
3.	6-A14	12.269	SEAL, R/CMPT L/WDO RR AUX (FRT SECONDARY SEAL) (POSN #2) (NO TAIL AT END OF SEAL) .	97-98	Y07	1	10407727
4.	6-A14	12.269	SEAL, R/CMPT L/WDO FRT AUX .	97-98	Y07	1	10401667
5.	6-A10	12.181	PANEL, R/CMPT L/WDO	97-98	Y07	1	10400238
6.	6-A14	12.269	WEATHERSTRIP, R/CMPT L/WDO	97-98	Y	1	10280750
7.	6-A11	12.212	BUMPER, R/CMPT L/WDO	97-98	Y07	2	10292972
8.	6-A11	12.237	STRIKER, R/CMPT L/WDO LAT	97-98	Y07	2	10414970
9.		8.906	BOLT/SCREW, M6.0X1.0-20.0 TORX RD WA, GM6138M (R/CMPT L/WDO LK STKR)	97-98		4	11517230
10.	6-A14	12.269	WEATHERSTRIP, R/CMPT L/WDO	97-98	Y	1	10236980
11.		8.915	NUT, HEX W/CON WA, M8X1.25, 7.32 THK, 9, ZF (R/CMPT L/WDO BODY SI HGE)	97-98		4	11514519
12.		N.S.	GASKET, R/CMPT LID BODY SI HGE				
13.	6-A10	12.184	SHIM, R/CMPT LID HGE (1.0MM)	97-98	Y07	2	10263224
	6-A10	12.184	SHIM, R/CMPT LID HGE (0.5MM)	97-98	Y07	4	10270941
14.	6-A10	12.184	HINGE, R/CMPT L/WDO	97-98	Y07	2	10269625
15.	6-A10	12.184	BOLT, R/CMPT L/WDO WDO SI HGE (8.913)	97	Y07	4	11516470
		8.913	SCREW, TORX PAN HD W/WA) (M8X1.25X20) (9.8 STEEL (R/CMPT L/WDO WDO SI HGE)	98		4	15958413
16.	6-A10	12.187	BRACKET, R/CMPT L/WDO STRUT (WDO SI) (INCLS 17)	97-98	Y07	LH	10270971
	6-A10	12.187	BRACKET, R/CMPT L/WDO STRUT (WDO SI) (INCLS 17)	97-98	Y07	RH	10270972
17.	6-A10	12.187	STUD, R/CMPT L/WDO STRUT WDO SI BRKT (PART OF 16)	97-98	Y07	1	10143220
18.		8.965	CONNECTOR, W/LEADS (1 PIN F) (INLINE-TO R/WDO DEFG) (2.535) (AC-DELCO #PT230)	97-98	Y	2	12102561
19.	6-A10	12.187	STRUT, R/CMPT L/WDO	97-98	Y07	LH	10429204
	6-A10	12.187	STRUT, R/CMPT L/WDO	97-98	Y07	RH	10429205
20.		8.965	CONNECTOR, W/LEADS (1 PIN F) (INLINE-TO R/WDO DEFG) (2.535) (AC-DELCO #PT230)	97-98	Y	2	12102561
21.		8.900	BOLT, HEX W/WA (M6X1X20) (R/CMPT L/WDO LAT)	97		4	10077321
		8.900	BOLT/SCREW, HEX W/FL WA 17 OD, M6X1X20, 9.8, 4345M, DOG PT (R/CMPT L/WDO LAT)	98		4	11515704
22.	6-A12	12.242	LATCH, R/CMPT LID (INCLS 27-33) (W/ACTUATOR)	97-98	Y07	2	16637654
	6-A12	12.243	LATCH, R/CMPT LID (INCLS 27-33) (W/ACTUATOR) (12.242) .	97-98	Y07	2	16637654
		8.965	TERMINAL, MALE 150 METRI-PACK, 18-20 GA	97-98		AR	12047581
23.	6-A12	12.242	NUT, R/CMPT L/WDO LAT (M6X1X2.42) (12.243) .	97-98	Y07	8	25633101
24.	6-A12	12.242	BRACKET, R/CMPT L/WDO LAT (INCLS 25, 34, 35)	97-98	Y07	RH	10413889
	6-A12	12.242	BRACKET, R/CMPT L/WDO LAT (INCLS 25, 34, 35)	97-98	Y07	LH	10413890

cardiagn.com

							1Y12-022
25.		N.S.	STUD, R/CMPT L/WDO LAT BRKT (PART OF 24)				
26.	6-A10	12.187	BOLT, R/CMPT L/WDO STRUT BRKT (WDO SI) (12.810)	97-98	Y	4	10293378
27.	6-A10	12.187	RIVET, R/CMPT LID POP-UP ROD SPR SEAT (4.9X21) (12.966)	97-98	Y07	2	16605493
28.	6-A12	12.242	SPRING, R/CMPT L/WDO LAT RTN	97-98	Y07	1	16637696
29.		8.921	RETAINER, PUSH-ON, 1/8 SHF SIZE, ZN .CHRO (R/CMPT LID LAT) (AC-DELCO #17058193)	97-98		1	17058193
30.		8.977	SCREW, HEX W/FL WA, M4.8X1.6X13, BZ (R/CMPT LID REL SW)	97-98		2	11515440
31.	6-A12	12.243	SWITCH, R/CMPT LID AJAR IND (INCLS 32) (LOCATED ON LAT IN TRUNK) (AC-DELCO #D1459C)	97-98	Y07	1	16608046
32.	6-A12	12.243	CONNECTOR, SW-R/CMPT LID AJAR IND (PART OF 31) (BLACK) (3-WAY F W/LEADS) (2.535) (AC-DELCO #PT256)	97-98	Y07 (UZ6)	1	12101864
	6-A12	12.243	CONNECTOR, SW-R/CMPT LID AJAR IND (PART OF 31) (3-WAY M W/LEADS) (2.530) (AC-DELCO #PT504)	97-98	Y07	2	12117371
	6-N25	11.935	CONNECTOR, SW-DM LP (PART OF 31) (3-WAY M W/LEADS) (2.530) (AC-DELCO #PT504)	97-98	Y	2	12117371
33.	6-A12	12.243	CLIP, R/CMPT LID LAT REL WRG HARN (R/CMPT L/WDO LATCH)	97-98	Y07	2	16625936
34.		8.900	BOLT/SCREW, HEX W/FL WA 17 OD, M6X1X20, 9.8, 4345M, DOG PT (PART OF 24)	97-98		2	11515704
35.	6-A16	12.810	HANDLE, RF LIFT OFF PNL/WDO STOW LAT (PART OF 24) (RUBBER BUMPER-POA)	97-98	Y07	LH	10401060
	6-A16	12.810	HANDLE, RF LIFT OFF PNL/WDO STOW LAT (PART OF 24) (RUBBER BUMPER-POA)	97-98	Y07	RH	10401061

RPO DEFINITIONS
UZ6 - SPEAKER SYSTEM 6, QUAD FRT DR MTD, DUAL QTR MTD

cardiagn.com

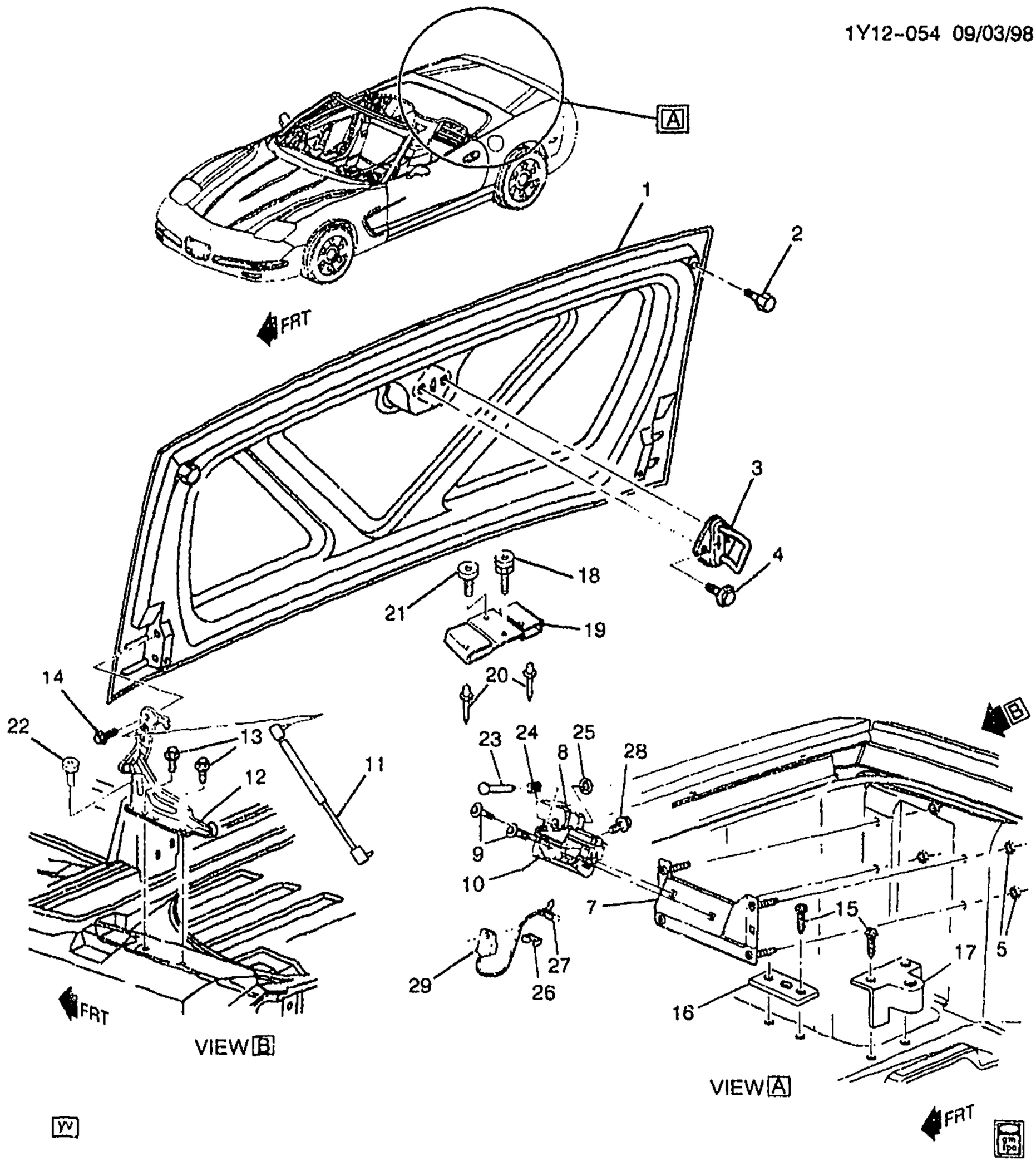

1998-2002 Y67 REAR COMPARTMENT LID HARDWARE

1.	6-A10	12.181	LID, R/CMPT (PRIMERED TO P/N 10421169)	98-02	Y67	1	10421169
2.	6-A11	12.212	BUMPER, R/CMPT LID (POSN #1)	98-02	Y67	2	10292972
3.	6-A11	12.237	STRIKER, R/CMPT LID LAT	98-02	Y67	1	10414970

© 2001 GENERAL MOTORS SERVICE PARTS OPERATIONS - CHEVROLET - 15Y

cardiagn.com

							1Y12-054
4.		8.900	SCREW, M6X1X30, 11 THD, 12.5 OD, 4.8, 6047M, P-PT (R/CMPT)	98-02	.....	2	11508128
5.	6-A11	12.237	NUT, R/CMPT LID LAT SUPT (M6X1X2.42) (12.243)	98-02	Y67	4	25633101
7.	6-A11	12.237	SUPPORT, R/CMPT LID LAT	98-02	Y67	1	10278683
8.	6-A12	12.242	LATCH, R/CMPT LID (INCLS 23-29) (W/ACTUATOR)	98-00	Y67	1	16637654
	6-A12	12.243	LATCH, R/CMPT LID (INCLS 23-29) (W/ACTUATOR) (12.242) .	98-00	Y67	1	16637654
	6-A12	12.243	LATCH, R/CMPT LID (INCLS 23-29) (12.242)	02	YY67	1	10305909
	6-A12	12.243	LATCH, R/CMPT LID (FOR VEHICLES BUILT W EMERGENCY TRUNK RELEASE LATCH SYSTEM; FOR 1ST DES SEE 16637654 W/O EMERGENCY TRUNK RELEASE SYSTEM.) (INCLS 23-29) (12.242)	01	YY67 (2ND DES)	1	10305909
	6-A12	12.242	LATCH, R/CMPT LID (FOR VEHICLES BUILT W/O EMERGENCY TRUNK RELEASE LATCH SYSTEM; FOR 2ND DES SEE 10305909 W/EMERGENCY TRUNK RELEASE SYSTEM) (INCLS 23-29) (W/ACTUATOR) ..	01-02	YY67 (1ST DES)	1	16637654
	6-A12	12.243	LATCH, R/CMPT LID (FOR VEHICLES BUILT W/O EMERGENCY TRUNK RELEASE LATCH SYSTEM; FOR 2ND DES SEE 10305909 W/EMERGENCY TRUNK RELEASE SYSTEM) (INCLS 23-29) (W/ACTUATOR) (12.242)	01-02	YY67 (1ST DES)	1	16637654
	6-N25	11.935	CONNECTOR, SW-DM LP (3-WAY M W/LEADS) (2.530) (AC-DELCO #PT504)	98-02	Y	2	12117371
9.		8.900	BOLT/SCREW, HEX W/FL WA 17 OD, M6X1X20, 9.8, 4345M, DOG PT (R/CMPT LID LAT)	98-02	.....	2	11515704
10.		N.S.	CABLE, ACTR C/LID LAT		.....		
11.	6-A10	12.187	STRUT, R/CMPT LID	98-02	Y67	2	10278149
12.	6-A10	12.184	HINGE, R/CMPT LID (INCLS 22) .	98-02	Y67	LH	10426103
	6-A10	12.184	HINGE, R/CMPT LID (INCLS 22) .	98-02	Y67	RH	10426104
13.	6-A10	12.184	BOLT, R/CMPT LID HGE (POSN #1) (TO BODY)	98-02	Y67	4	10292671
14.		8.900	BOLT, HEX W/WA, M8X1.25X20, 8.8, PC (R/CMPT LID HGE) (POSN #2)	98-02	.....	4	11504611
15.		8.977	SCREW, LG RND WA HD W/BLK NYL WA, 4.2X 1.41X13, 11-OD, DRILL PT, 6172, PEOR (R/CMPT PNL STOW PKT CVR LAT STKR) .	98-02	.....	8	10180421
16.	6-N26	15.222	STRIKER, R/CMPT PNL STOW PKT CVR LAT (POSN #1)	98-02	Y67	2	10401266
17.	6-N26	15.222	STRIKER, R/CMPT PNL STOW PKT CVR LAT (POSN #2)	98-02	Y67	2	10290688

cardiagn.com

							1Y12-054
18.	6-A8	12.170	PLUG, F/TOP STOW COMPT HOLE (BLACK) (4.8 HOLE) (14.685)	98-02	Y67	1	20538173
19.	6-A8	12.170	BRACKET, F/TOP STOW COMPT LID BPR	98-02	Y67	1	10405605
20.		N.S.	RIVET, F/TOP STOW COMPT BRKT				
21.	6-A8	12.170	BUMPER, F/TOP STOW COMPT LID (POSN #2)	98-02	Y67	1	10414378
22.	6-A11	12.212	BUMPER, R/CMPT LID HGE (PART OF 12) (12.170)	98-02	Y67	2	10414378
23.	6-A10	12.187	RIVET, R/CMPT LID POP-UP ROD SPR SEAT (PART OF 8) (4.9X21) (12.966)	98-02	Y67	1	16605493
24.	6-A14	12.249	SPRING, R/CMPT LID LAT (PART OF 8) (12.242)	98-02	Y67	1	16637696
25.		8.921	RETAINER, PUSH-ON, 1/8 SHF SIZE, ZN .CHRO (R/CMPT LID LK) (PART OF 8) (AC-DELCO #17058193)	98-02		1	17058193
26.	6-A12	12.243	CLIP, R/CMPT LID LAT REL WRG HARN (PART OF 8) (7" ADJ, W/ROSEBUD FOR .25 DIA HOLE .031-.14 TH) (8.965)	02	YY	1	3816659
	6-A12	12.243	CLIP, R/CMPT LID LAT REL WRG HARN (F/TOP STOW CMPT LID LATCH) (PART OF 8)	98-02	Y67	1	16625936
	6-A12	12.243	CLIP, R/CMPT LID LAT REL WRG HARN (R/CMPT LID LATCH) (PART OF 8)	98-02	Y67	1	16625936
27.	6-A12	12.243	CONNECTOR, SW-R/CMPT LID AJAR IND (PART OF 8) (BLACK) (3-WAY F W/LEADS) (2.535) (AC-DELCO #PT256)	98-02	Y67 (UZ6)	1	12101864
	6-A12	12.243	CONNECTOR, SW-R/CMPT LID AJAR IND (PART OF 8) (3-WAY M W/LEADS) (2.530) (AC-DELCO #PT504)	99-00	Y67	2	12117371
28.		8.977	SCREW, HEX W/FL WA, M4.8X1.6X13, BZ (R/CMPT LID REL SW) (PART OF 8)	98-02		2	11515440
29.	6-A12	12.243	SWITCH, R/CMPT LID AJAR IND (PART OF 8) (LOCATED ON LAT IN TRUNK) (AC-DELCO #D1459C)	98-02	Y67	1	16608046

RPO DEFINITIONS
UZ6 – SPEAKER SYSTEM 6, QUAD FRT DR MTD, DUAL QTR MTD

cardiagn.com

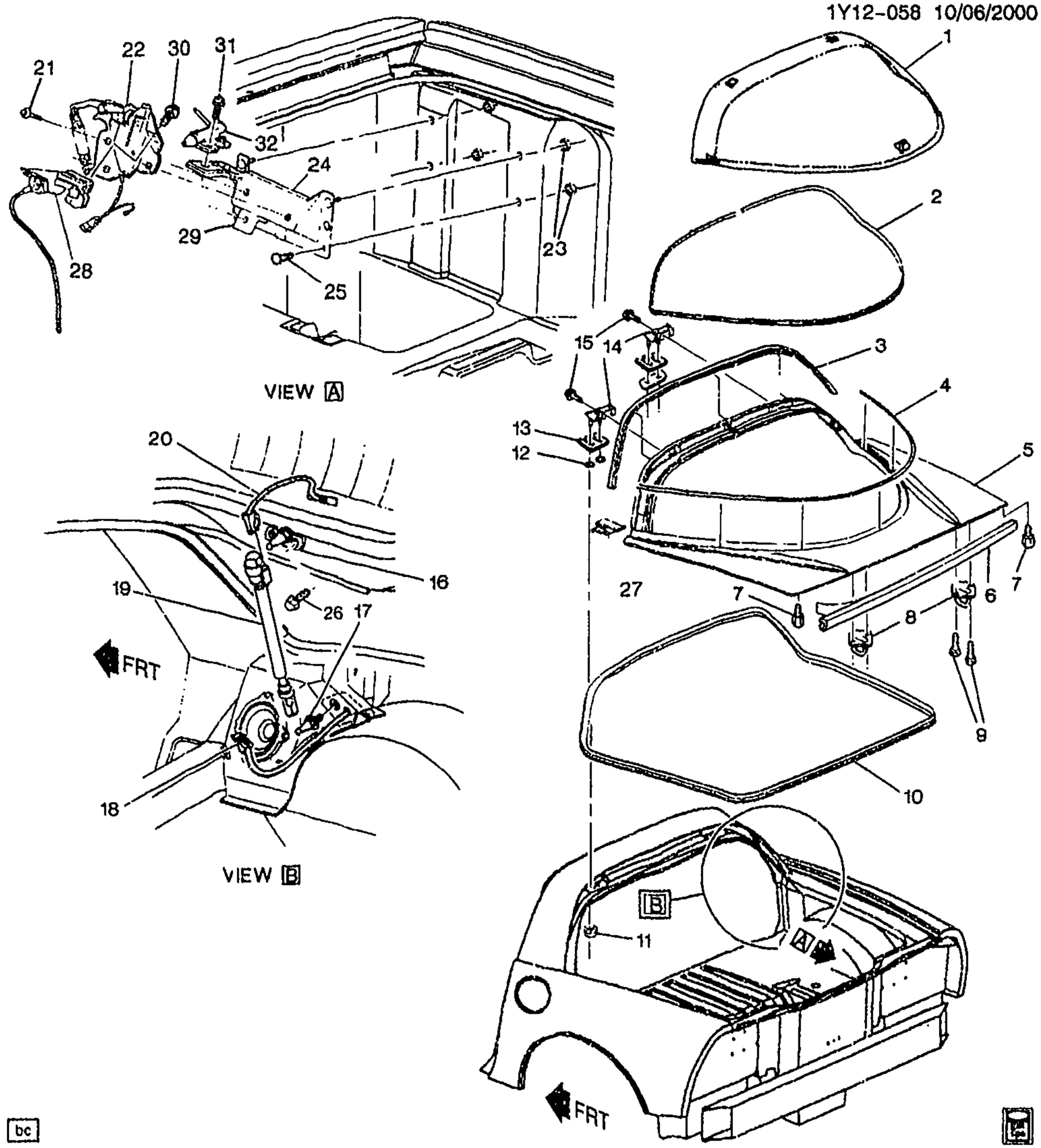

1Y12-058

1999-2000 Y07 REAR COMPARTMENT LID HARDWARE

1.	6-A10	12.180	WINDOW, R/CMPT LIFT (HTCH GLS)	99-00	Y07	1	10247317
2.	6-A14	12.269	SEAL, R/CMPT L/WDO RR AUX ..	99-00	Y	1	10401665
3.	6-A14	12.269	SEAL, R/CMPT L/WDO RR AUX (FRT SECONDARY SEAL)	99-00	Y07	1	10438026

© 2001 GENERAL MOTORS SERVICE PARTS OPERATIONS-CHEVROLET-15Y

cardiagn.com

							1Y12-058
4.	6-A14	12.269	SEAL, R/CMPT L/WDO FRT AUX .	99-00	Y07	1	10401667
5.	6-A10	12.181	PANEL, R/CMPT L/WDO	99-00	Y07	1	10400238
6.	6-A14	12.269	WEATHERSTRIP, R/CMPT L/WDO	99-00	Y	1	10280750
7.	6-A11	12.212	BUMPER, R/CMPT L/WDO	99-00	Y07	2	10292972
8.	6-A11	12.237	STRIKER, R/CMPT L/WDO LAT	99-00	Y07	2	16637685
9.		8.906	BOLT/SCREW, M6.0X1.0-20.0 TORX RD W/A, GM6138M (R/CMPT L/WDO LK STKR)	99-00		4	11517230
10.	6-A14	12.269	WEATHERSTRIP, R/CMPT L/WDO	99-00	Y	1	10236980
11.		8.915	NUT, HEX W/CON WA, M8X1.25, 7.32 THK, 9, ZF (R/CMPT L/WDO BODY SI HGE)	99-00		4	11514519
12.		N.S.	GASKET, R/CMPT LID BODY SI HGE			4	
13.	6-A10	12.184	SHIM, R/CMPT LID HGE (1.0MM)	99-00	Y07	6	10263224
	6-A10	12.184	SHIM, R/CMPT LID HGE (0.5MM)	99-00	Y07	2	10270941
14.	6-A10	12.184	HINGE, R/CMPT L/WDO	99-00	Y07	2	10269625
15.		8.913	SCREW, TORX PAN HD W/WA) (M8X1.25X20) (9.8 STEEL (R/CMPT L/WDO WDO SI HGE)	99-00		4	15958413
16.	6-A10	12.187	BRACKET, R/CMPT L/WDO STRUT (WDO SI) (INCLS 17)	99	Y07	LH	10270971
	6-A10	12.187	BRACKET, R/CMPT L/WDO STRUT (WDO SI) (INCLS 17)	99	Y07	RH	10270972
	6-A10	12.187	BRACKET, R/CMPT L/WDO STRUT (WDO SI) (INCLS 17)	00	Y07	LH	10270971
	6-A10	12.187	BRACKET, R/CMPT L/WDO STRUT (WDO SI) (INCLS 17)	00	Y07	RH	10270972
17.	6-A10	12.187	STUD, R/CMPT L/WDO STRUT WDO SI BRKT (PART OF 16)	99-00	Y07	1	10143220
18.	6-N16	9.778	CONNECTOR, INLINE-TO R/WDO DEFG (1-WAY F) (W/LEADS) (M/P 630 SELF LK) (AC-DELCO #PT798)	99-00	Y07 (UZ6)	2	12167133
19.	6-A10	12.187	STRUT, R/CMPT L/WDO	99-00	Y07	LH	10429204
	6-A10	12.187	STRUT, R/CMPT L/WDO	99-00	Y07	RH	10429205
20.	6-N16	9.778	CONNECTOR, INLINE-TO R/WDO DEFG (1-WAY F) (W/LEADS) (M/P 630 SELF LK) (AC-DELCO #PT798)	99-00	Y07 (UZ6)	2	12167133
21.	6-A12	12.242	BOLT, R/CMPT L/WDO LAT	99-00	Y07	6	11517753
22.	6-A12	12.242	LATCH, R/CMPT L/WDO (INCLS 28, 30)	99-00	Y07	2	16638796
	6-A12	12.243	LATCH, R/CMPT L/WDO (INCLS 28, 30) (12.242)	99-00	Y07	2	16638796
		8.965	TERMINAL, MALE 150 METRI-PACK, 18-20 GA	99-00		AR	12047581
	6-A12	12.243	CONNECTOR, SW-R/CMPT LID AJAR IND (BLACK) (3-WAY F W/LEADS) (2.535) (AC-DELCO #PT256)	99-00	Y07 (UZ6)	1	12101864
	6-A12	12.243	CONNECTOR, SW-R/CMPT LID AJAR IND (3-WAY M W/LEADS) (2.530) (AC-DELCO #PT504)	99	Y07	2	12117371
23.	6-A12	12.242	NUT, R/CMPT L/WDO LAT (M6X1X2.42) (12.243)	99-00	Y07	8	25633101

cardiagn.com

							1Y12-058
24.	6-A12	12.242	BRACKET, R/CMPT L/WDO LAT (INCLS 25, 29, 34-35)	99-00	Y07	LH	10403704
	6-A12	12.242	BRACKET, R/CMPT L/WDO LAT (INCLS 25, 29, 34-35)	99-00	Y07	RH	10403705
25.		N.S.	STUD, R/CMPT L/WDO LAT BRKT (PART OF 24)		.....		
26.	6-A10	12.187	BOLT, R/CMPT L/WDO STRUT BRKT (WDO SI) (12.810)	99-00	Y07	4	10293378
27.	6-A14	12.269	RETAINER, R/CMPT L/WDO SEAL	99-00	Y07	2	10427824
28.	6-A1[illegible]	12.243	ACTUATOR, R/CMPT LID LAT REL (PART OF 22) (AC-DELCO #16634742)	99-00	Y07	2	16634742
29.		N.S.	BRACKET, RF LIFT OFF PNL/WDO STOW RR (LATCH BRACKET) (PART OF 24))		.....	1	
30.		8.977	SCREW, HEX W/FL WA, M4.8X1.6X13, BZ (R/CMPT LID LATCH (TO STRIKER) (PART OF 22)	99-00	.....	2	11515440
31.		8.900	BOLT, HEX W/CON WA, M6X1X20 (RF LIFT OFF PNL/WDO) (PART OF 24)	99-00	.....	4	11514623
32.	6-A16	12.810	HANDLE, RF LIFT OFF PNL/WDO STOW LAT (PART OF 24) (RUBBER BUMPER-POA)	99-00	Y07	LH	10401060
	6-A16	12.810	HANDLE, RF LIFT OFF PNL/WDO STOW LAT (PART OF 24) (RUBBER BUMPER-POA)	99-00	Y07	RH	10401061

RPO DEFINITIONS
UZ6 - SPEAKER SYSTEM 6, QUAD FRT DR MTD, DUAL QTR MTD

cardiagn.com

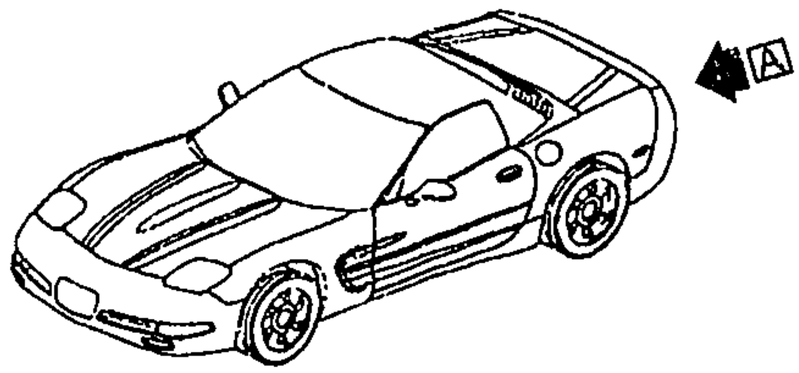

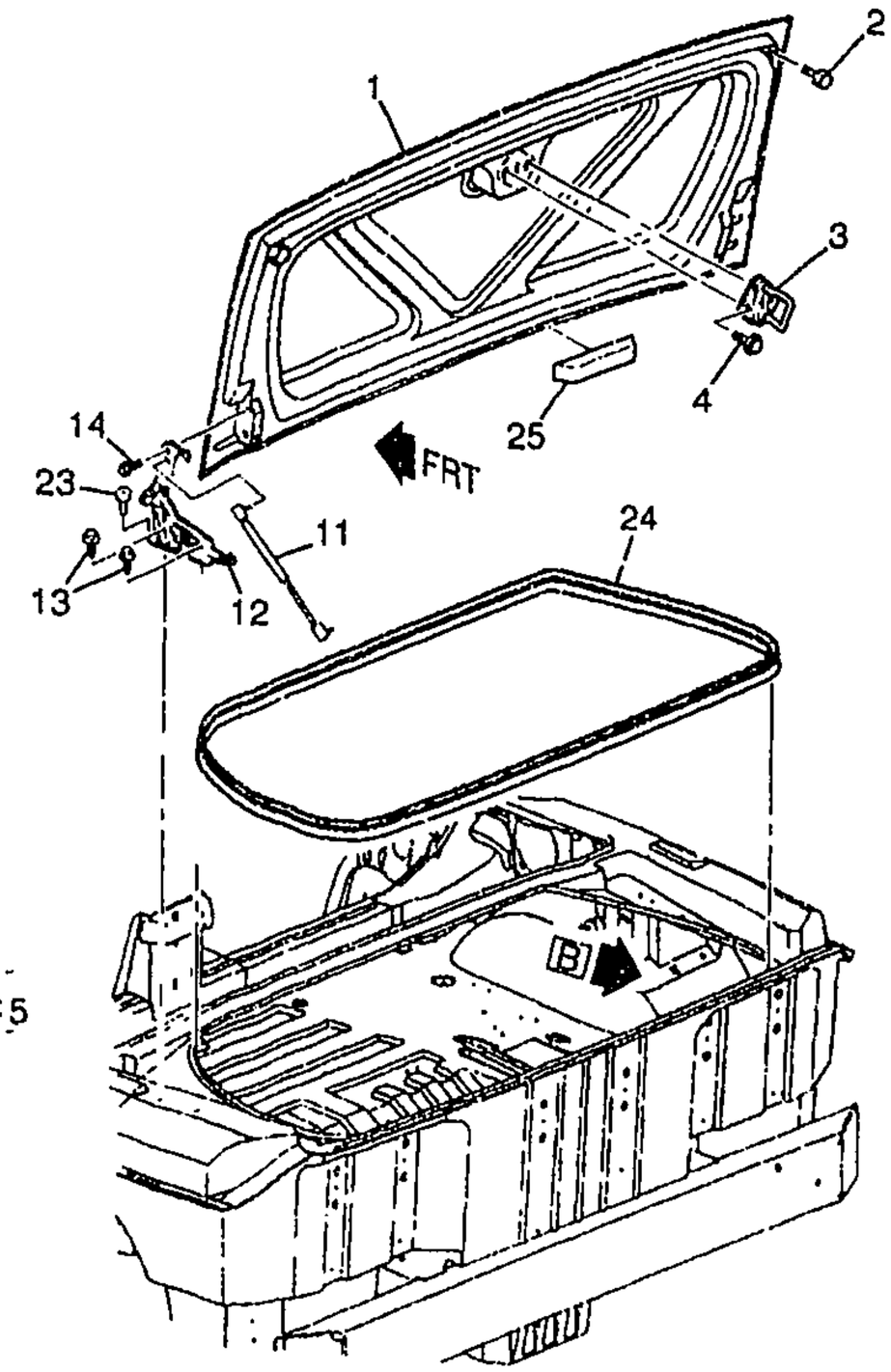

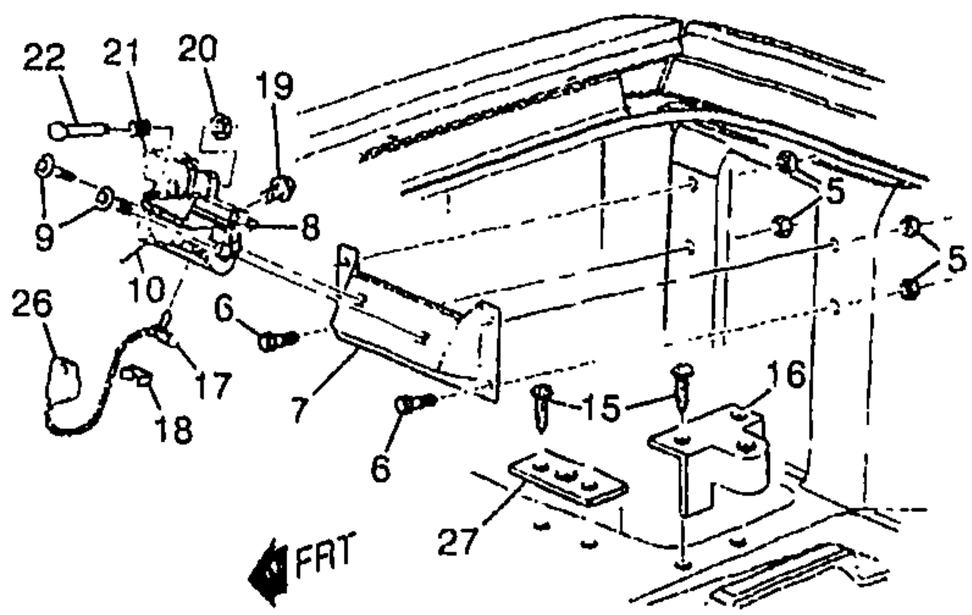

VIEW B

VIEW A

bc

1Y12-059

1999-2000 Y37 REAR COMPARTMENT LID HARDWARE

1.	6-A10	12.181	LID, R/CMPT (PRIMERED TO P/N 10421169)	99-00	Y37	1	10421169
2.	6-A11	12.212	BUMPER, R/CMPT LID	99-00	Y37	2	10292972
3.	6-A11	12.237	STRIKER, R/CMPT LID LAT	99-00	Y37	1	10414970
4.		8.906	BOLT/SCREW, M6.0X1.0-20.0 TORX RD WA, GM6138M (R/CMPT LID LAT STKR)	99-00		2	11517230
5.	6-A11	12.237	NUT, R/CMPT LID LAT SUPT (M6X1X2.42) (12.243)	99-00	Y37	4	25633101
6.		N.S.	STUD, R/CMPT LID LAT SUPT (PART OF 7)			4	
7.	6-A11	12.237	SUPPORT, R/CMPT LID LAT (INCLS 6)	99-00	Y37	1	10278683

cardiagn.com

						1Y12-059	
8.	6-A12	12.242	LATCH, R/CMPT LID (INCLS 10, 17-22, 26)) (W/ACTUATOR)	99-00	Y37	1	16637654
	6-A12	12.243	LATCH, R/CMPT LID (INCLS 10, 17-22, 26)) (W/ACTUATOR) (12.242)	99-00	Y37	1	16637654
	6-N25	11.935	CONNECTOR, SW-DM LP (3-WAY M W/LEADS) (2.530) (AC-DELCO #PT504)	99-00	Y	2	12117371
9.		8.900	BOLT/SCREW, HEX W/FL WA 17 OD, M6X1X20, 9.8, 4345M, DOG PT (R/CMPT LID LAT)	99-00		2	11515704
10.		N.S.	CABLE, ACTR C/LID LAT) (PART OF 8)				
11.	6-A10	12.187	STRUT, R/CMPT LID	99-00	Y37	2	10278149
12.	6-A10	12.184	HINGE, R/CMPT LID (INCLS 23)	99-00	Y37	LH	10426103
	6-A10	12.184	HINGE, R/CMPT LID (INCLS 23)	99-00	Y37	RH	10426104
13.	6-A10	12.184	BOLT, R/CMPT LID HGE (TO BODY)	99-00	Y37	4	10292671
14.		8.900	BOLT, HEX W/WA, M8X1.25X20, 8.8, PC (TO HGE)	99-00		4	11504611
15.		8.977	SCREW, LG RND WA HD W/BLK NYL WA, 4.2X 1.41X13, 11-OD, DRILL PT, 6172, PEOR (R/CMPT PNL STOW PKT CVR LAT STKR)	99-00		8	10180421
16.	6-N26	15.222	STRIKER, R/CMPT PNL STOW PKT CVR LAT	99-00			10290688
17.	6-A12	12.243	CONNECTOR, SW-R/CMPT LID AJAR IND (PART OF 8) (PART OF 26) (BLACK) (3-WAY F W/LEADS) (2.535) (AC-DELCO #PT256)	99-00	Y37	1	12101864
	6-A12	12.243	CONNECTOR, SW-R/CMPT LID AJAR IND (PART OF 8) (PART OF 26) (3-WAY M W/LEADS) (2.530) (AC-DELCO #PT504)	99-00	Y37	2	12117371
18.	6-A12	12.243	CLIP, R/CMPT LID LAT REL WRG HARN (PART OF 8)	99-00	Y37	2	16625936
19.		8.977	SCREW, HEX W/FL WA, M4.8X1.6X13, BZ (PART OF 8)	99-00		2	11515440
20.		8.921	RETAINER, PUSH-ON, 1/8 SHF SIZE, ZN .CHRO (PART OF 8) (AC-DELCO #17058193)	99-00		1	17058193
21.	6-A14	12.249	SPRING, R/CMPT LID LAT (PART OF 8) (12.242)	99-00	Y37	1	16637696
22.	6-A10	12.187	RIVET, R/CMPT LID POP-UP ROD SPR SEAT (PART OF 8) (4.9X21) (12.966)	99-00	Y37	2	16605493
23.	6-A11	12.212	BUMPER, R/CMPT LID HGE (PART OF 12) (12.170)	99-00	Y37	1	10414378
24.	6-A14	12.269	WEATHERSTRIP, R/CMPT LID	99-00	Y37	1	10255033
25.	6-A11	12.212	BUMPER, R/CMPT LID	99-00	Y37	1	10422620
26.	6-A12	12.243	SWITCH, R/CMPT LID AJAR IND (PART OF 8) (INCLS 17) (LOCATED ON LAT IN TRUNK) (AC-DELCO #D1459C)	99-00	Y37	1	16608046
27.	6-N26	15.222	STRIKER, R/CMPT PNL STOW PKT CVR LAT	99-00			10401266

cardiagn.com

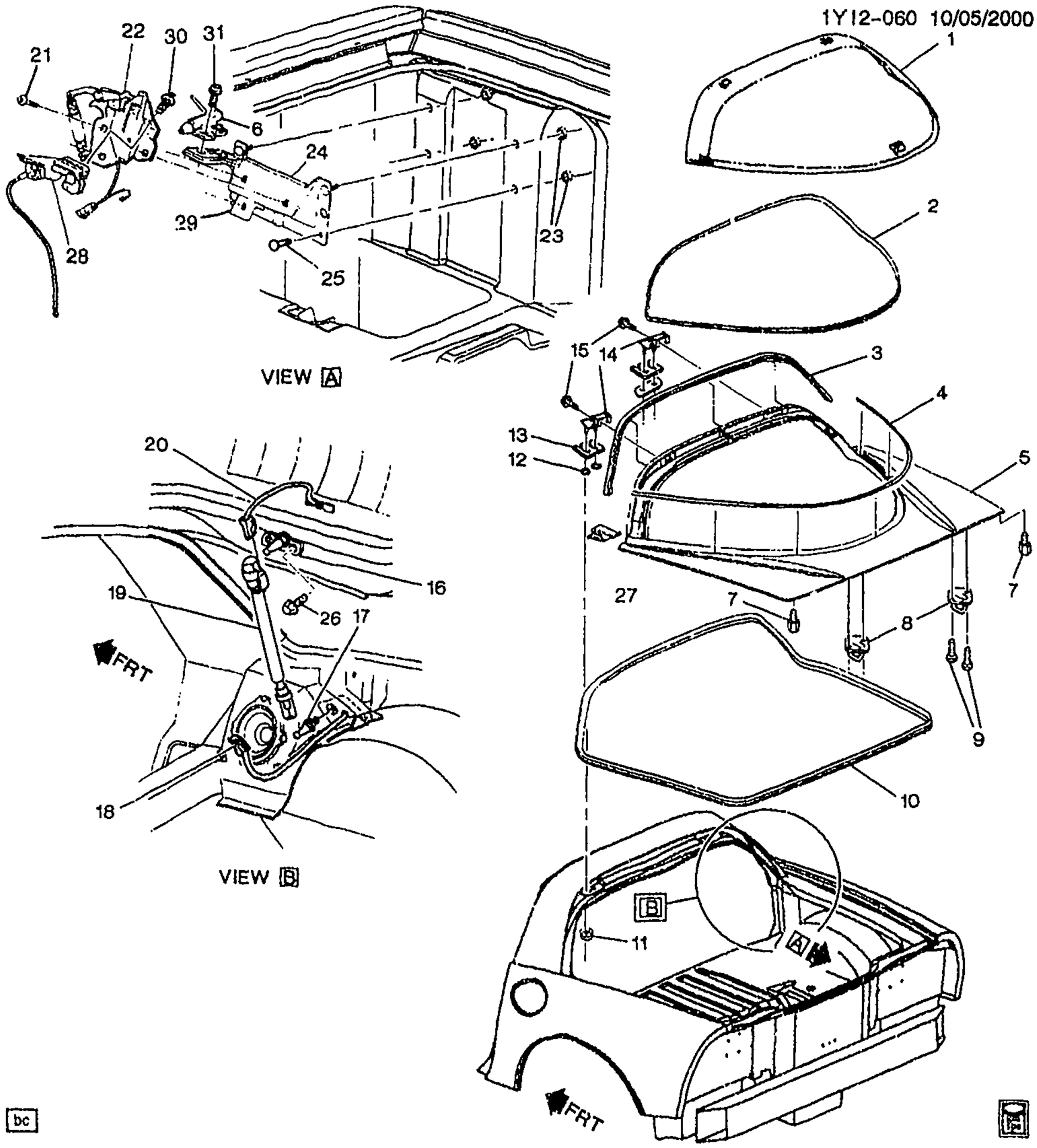

1Y12-060

2001-2002 Y07 REAR COMPARTMENT LID HARDWARE

1.	6-A10	12.180	WINDOW, R/CMPT LIFT (HTCH GLS)	01--02	Y07	1	10247317
2.	6-A14	12.269	SEAL, R/CMPT L/WDO RR AUX	01-02	Y	1	10401665
3.	6-A14	12.269	SEAL, R/CMPT L/WDO RR AUX (FRT SECONDARY SEAL)	01-02	Y07	1	10438026

cardiagn.com

							1Y12-060
4.	6-A14	12.269	SEAL, R/CMPT L/WDO FRT AUX	01-02	Y07	1	10401667
5.	6-A10	12.181	PANEL, R/CMPT L/WDO	01-02	Y07	1	10400238
6.	6-A16	12.810	HANDLE, RF LIFT OFF PNL/WDO STOW LAT (PART OF 24) (RUBBER BUMPER-POA)	01-02	Y07	LH	10401060
	6-A16	12.810	HANDLE, RF LIFT OFF PNL/WDO STOW LAT (PART OF 24) (RUBBER BUMPER-POA)	01-02	Y07	RH	10401061
7.	6-A11	12.212	BUMPER, R/CMPT L/WDO	01-02	Y07	2	10292972
8.	6-A11	12.237	STRIKER, R/CMPT L/WDO LAT	01-02	Y07	2	16637685
9.		8.906	BOLT/SCREW, M6.0X1.0-20.0 TORX RD WA, GM6138M (R/CMPT L/WDO LK STKR)	01-02		4	11517230
10.	6-A14	12.269	WEATHERSTRIP, R/CMPT L/WDO	01-02	Y	1	10236980
11.		8.915	NUT, HEX W/CON WA, M8X1.25, 7.32 THK, 9, ZF (R/CMPT L/WDO HGE (BODY SI))	01-02		4	11514519
12.		N.S.	GASKET, R/CMPT LID BODY SI HGE			4	
13.	6-A10	12.184	SHIM, R/CMPT LID HGE (1.0MM)	01-02	Y07	6	10263224
	6-A10	12.184	SHIM, R/CMPT LID HGE (0.5MM)	01-02	Y07	2	10270941
	6-A10	12.184	SHIM, R/CMPT LID HGE (BLACK) (36.0 X 72.0 X 1.0) (STL)	01-02	Y07	AR	10433796
14.	6-A10	12.184	HINGE, R/CMPT L/WDO	01-02	Y07	2	10269625
15.		8.913	SCREW, TORX PAN HD W/WA) (M8X1.25X20) (9.8 STEEL (R/CMPT L/WDO WDO SI HGE)	01-02		4	15958413
16.	6-A10	12.187	BRACKET, R/CMPT L/WDO STRUT (WDO SI) (INCLS 17)	01-02	Y07	LH	10270971
	6-A10	12.187	BRACKET, R/CMPT L/WDO STRUT (WDO SI) (INCLS 17)	01-02	Y07	RH	10270972
17.	6-A10	12.187	STUD, R/CMPT L/WDO STRUT WDO SI BRKT (PART OF 16)	01-02	Y07	1	10143220
18.	6-N16	9.778	CONNECTOR, INLINE-TO R/WDO DEFG (1-WAY F) (W/LEADS) (M/P 630 SELF LK) (AC-DELCO #PT798)	01-02	Y07 (UZ6)	2	12167133
19.	6-A10	12.187	STRUT, R/CMPT L/WDO	01-02	Y07	LH	10429204
	6-A10	12.187	STRUT, R/CMPT L/WDO	01-02	Y07	RH	10429205
20.	6-N16	9.778	CONNECTOR, INLINE-TO R/WDO DEFG (1-WAY F) (W/LEADS) (M/P 630 SELF LK) (AC-DELCO #PT798)	01-02	Y07 (UZ6)	2	12167133
21.	6-A12	12.242	BOLT, R/CMPT L/WDO LAT	01-02	Y07	6	11517753
22.	6-A12	12.242	LATCH, R/CMPT L/WDO (INCLS 28, 30)	01-02	Y07	2	16638796
	6-A12	12.243	LATCH, R/CMPT L/WDO (INCLS 28, 30) (12.242)	01-02	Y07	2	16638796
		8.965	TERMINAL, MALE 150 METRI-PACK, 18-20 GA	01-02		AR	12047581
	6-A12	12.243	CONNECTOR, SW-R/CMPT LID AJAR IND (BLACK) (3-WAY F W/LEADS) (2.535) (AC-DELCO #PT256)	01-02	Y07 (UZ6)	1	12101864
23.	6-A12	12.242	NUT, R/CMPT L/WDO LAT (M6X1X2.42) (12.243)	01-02	Y07	8	25633101

cardiagn.com

							1Y12–060
24.	6–A12	12.242	BRACKET, R/CMPT L/WDO LAT (INCLS 6, 29, 31)	01–02	Y07	LH	10403704
	6–A12	12.242	BRACKET, R/CMPT L/WDO LAT (INCLS 6, 29, 31)	01–02	Y07	RH	10403705
25.		N.S.	STUD, R/CMPT L/WDO LAT BRKT (PART OF 24)		.....		
26.	6–A10	12.187	BOLT, R/CMPT L/WDO STRUT BRKT (WDO SI) (12.810)	01–02	Y07	4	10293378
27.	6–A14	12.269	RETAINER, R/CMPT L/WDO SEAL	01–02	Y07	2	10427824
28.	6–A12	12.243	ACTUATOR, R/CMPT LID LAT REL (PART OF 22) (AC–DELCO #16634742)	01–02	Y07	2	16634742
29.		N.S.	LATCH BRACKET) (PART OF 24		.....	2	
30.		8.977	SCREW, HEX W/FL WA, M4.8X1.6X13, BZ (R/CMPT LID LATCH (TO STRIKER) (PART OF 22)	01–02	.....	2	11515440
31.		8.900	BOLT, HEX W/CON WA, M6X1X20 (RF LIFT OFF PNL/WDO) (PART OF 24)	01–02	.....	4	11514623

RPO DEFINITIONS
UZ6 – SPEAKER SYSTEM 6, QUAD FRT DR MTD, DUAL QTR MTD

cardiagn.com

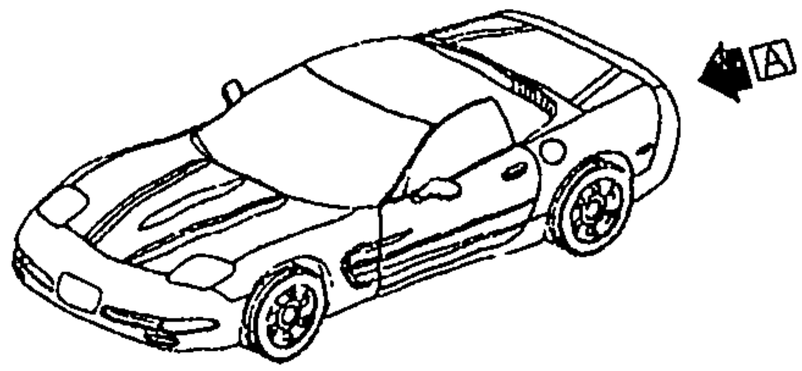

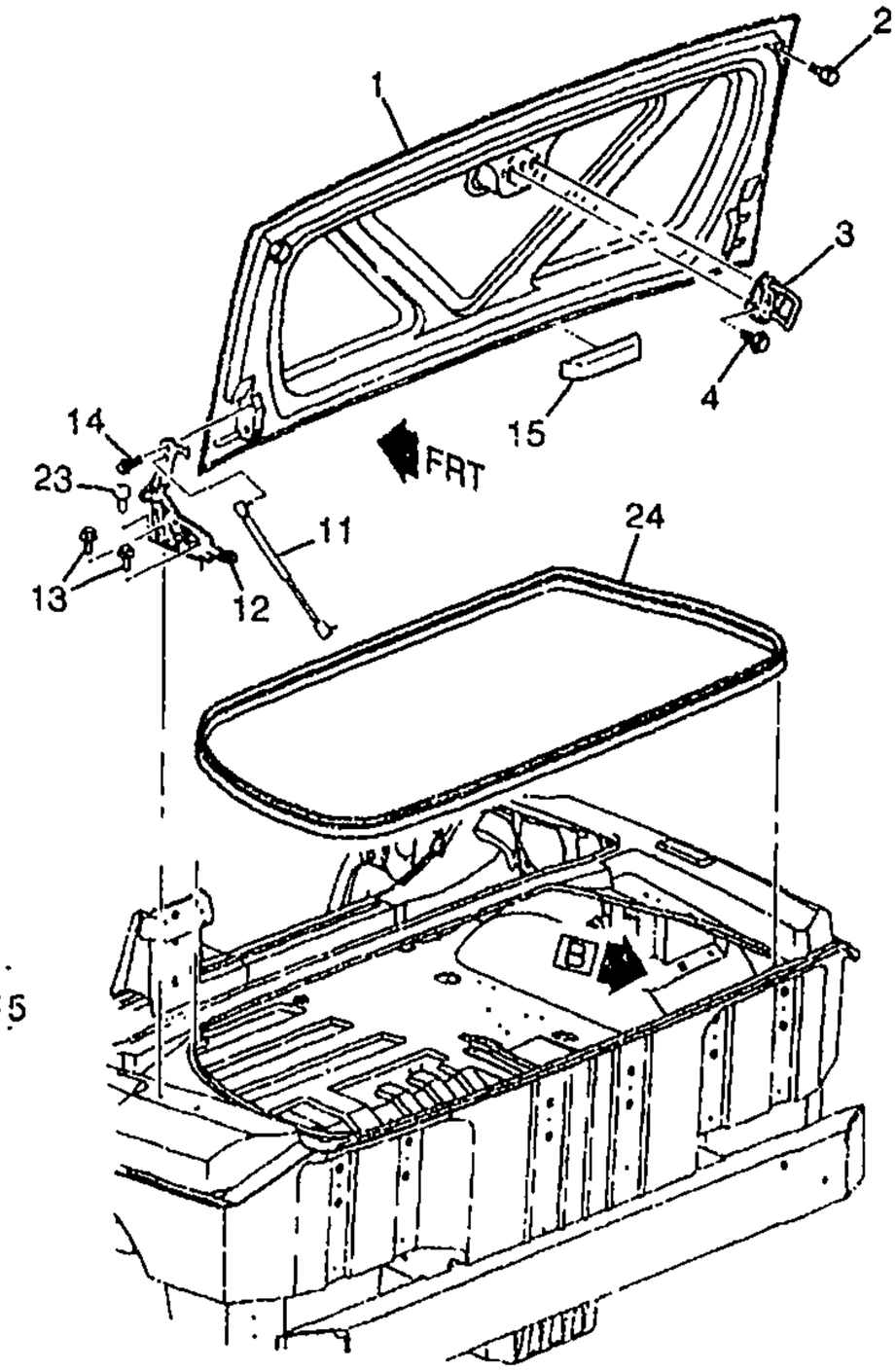

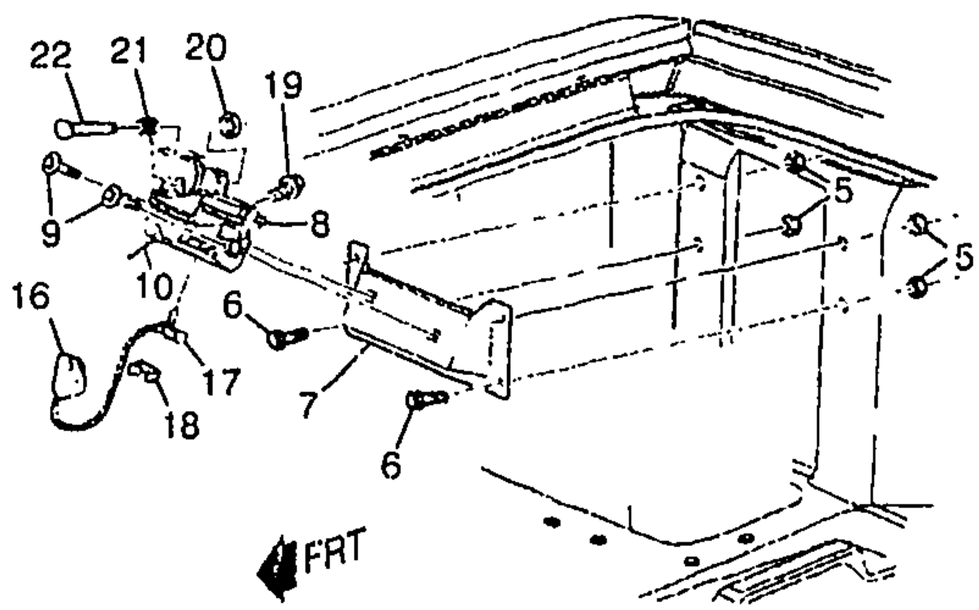

VIEW B

VIEW A

bc

1Y12-070

2001-2002 Y37 REAR COMPARTMENT LID HARDWARE

1.	6-A10	12.181	LID, R/CMPT (PRIMERED TO P/N 10421169)	01-02	Y37	1	10421169
2.	6-A11	12.212	BUMPER, R/CMPT LID	01-02	Y37	2	10292972
3.	6-A11	12.237	STRIKER, R/CMPT LID LAT	01-02	Y37	1	10414970
4.		8.906	BOLT/SCREW, M6.0X1.0-20.0 TORX RD WA, GM6138M (R/CMPT LID LAT STKR)	01-02		2	11517230
5.	6-A11	12.237	NUT, R/CMPT LID LAT SUPT (M6X1X2.42) (12.243)	01-02	Y37	4	25633101
6.		N.S.	STUD, R/CMPT LID LAT SUPT (PART OF 7)			4	
7.	6-A11	12.237	SUPPORT, R/CMPT LID LAT (INCLS 6)	01-02	Y37	1	10278683

cardiagn.com

							1Y12-070
8.	6-A12	12.242	LATCH, R/CMPT LID (INCLS 17-22, 26) (W/ACTUATOR)	01-02	Y37	1	16637654
	6-A12	12.243	LATCH, R/CMPT LID (INCLS 17-22, 26) (W/ACTUATOR) (12.242)	01-02	Y37	1	16637654
	6-N25	11.935	CONNECTOR, SW-DM LP (3-WAY M W/LEADS) (2.530) (AC-DELCO #PT504)	01-02	Y	2	12117371
9.		8.900	BOLT/SCREW, HEX W/FL WA 17 OD, M6X1X20, 9.8, 4345M, DOG PT (R/CMPT LID LAT)	01-02	.....	2	11515704
10.		N.S.	CABLE, ACTR C/LID LAT		.....		
11.	6-A10	12.187	STRUT, R/CMPT LID	01-02	Y37	2	10278149
12.	6-A10	12.184	HINGE, R/CMPT LID (INCLS 23) .	01-02	Y37	LH	10426103
	6-A10	12.184	HINGE, R/CMPT LID (INCLS 23) .	01-02	Y37	RH	10426104
13.	6-A10	12.184	BOLT, R/CMPT LID HGE (TO BODY)	01-02	Y37	4	10292671
14.		8.900	BOLT, HEX W/WA, M8X1.25X20, 8.8, PC (TO HGE)	01-02	.....	4	11504611
15.	6-A11	12.212	BUMPER, R/CMPT LID	01-02	Y37	1	10422620
16.	6-A12	12.243	SWITCH, R/CMPT LID AJAR IND (PART OF 8) (INCLS 17) (LOCATED ON LAT IN TRUNK) (AC-DELCO #D1459C)	01-02	Y37	1	16608046
17.	6-A12	12.243	CONNECTOR, SW-R/CMPT LID AJAR IND (PART OF 8) (PART OF 26) (BLACK) (3-WAY F W/LEADS) (2.535) (AC-DELCO #PT256)	01-02	Y37	1	12101864
	6-A12	12.243	CONNECTOR, SW-R/CMPT LID AJAR IND (PART OF 8) (PART OF 26) (3-WAY M W/LEADS) (2.530) (AC-DELCO #PT504)	01-02	Y37	2	12117371
18.	6-A12	12.243	CLIP, R/CMPT LID LAT REL WRG HARN (PART OF 8)	01-02	Y37	2	16625936
	6-A12	12.243	CLIP, R/CMPT LID LAT REL WRG HARN (PART OF 8) (7" ADJ, W/ROSEBUD FOR .25 DIA HOLE .031-.14 TH) (8.965)	02	YY	1	3816659
19.		8.977	SCREW, HEX W/FL WA, M4.8X1.6X13, BZ (PART OF 8) ...	01-02	.....	2	11515440
20.		8.921	RETAINER, PUSH-ON, 1/8 SHF SIZE, ZN .CHRO (PART OF 8) (AC-DELCO #17058193)	01-02	.....	1	17058193
21.	6-A14	12.249	SPRING, R/CMPT LID LAT (PART OF 8) (12.242)	01-02	Y37	1	16637396
22.	6-A10	12.187	RIVET, R/CMPT LID POP-UP ROD SPR SEAT (PART OF 8) (4.9X21) (12.966)	01-02	Y37	2	16605493
23.	6-A11	12.212	BUMPER, R/CMPT LID (PART OF 12) (12.170)	01-02	Y37	1	10414378
24.	6-A14	12.269	WEATHERSTRIP R/CMPT LID ...	01-02	Y37	1	10255033

cardiagn.com

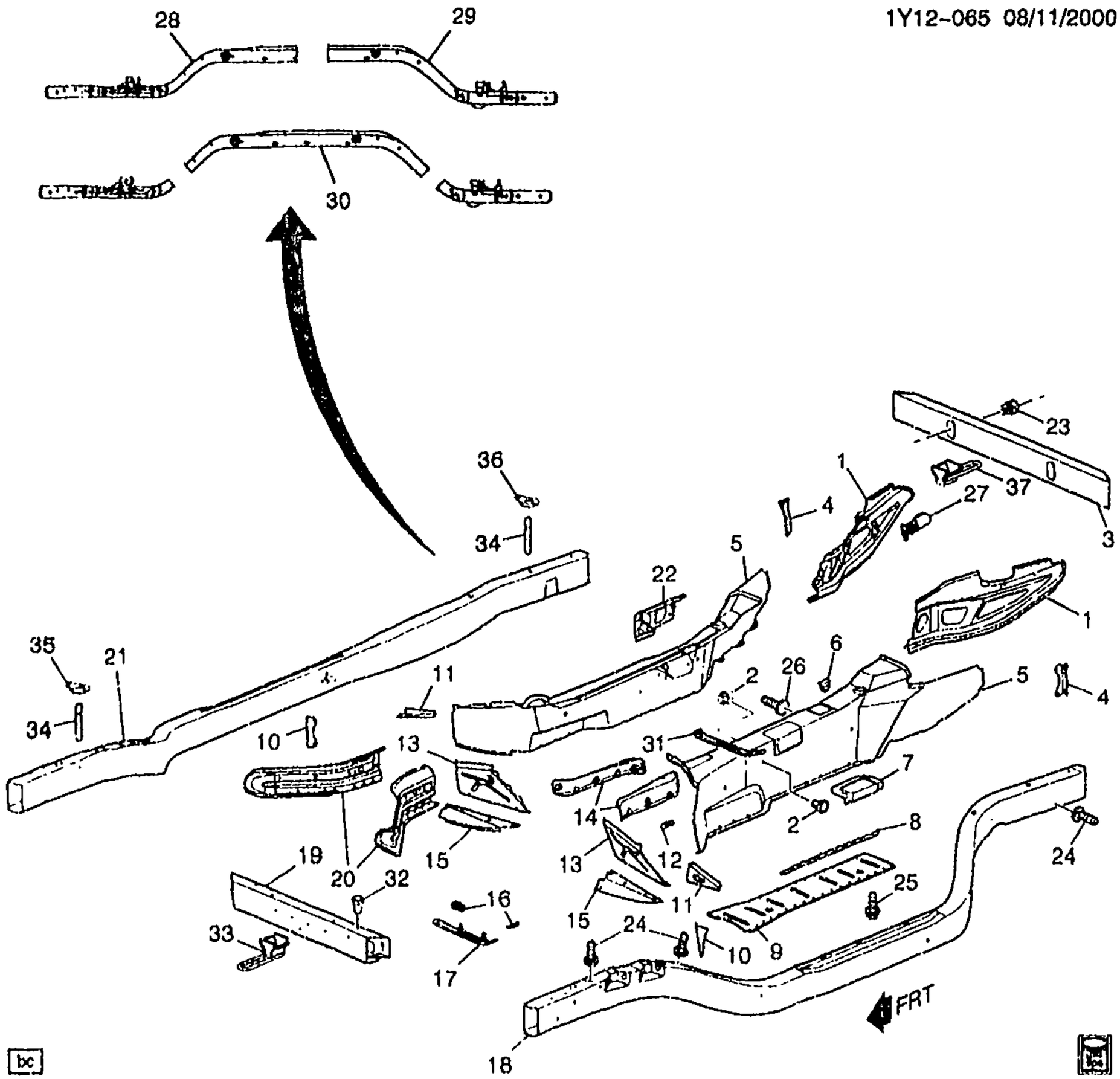

1Y12-065

1997 Y SHEET METAL/BODY PART 3 (BUMPER BARS,TUNNEL,RAILS)

1.	6-A23	12.980	BRACE, FLR PNL TUN RR	97	Y	LH	10293681
	6-A23	12.980	BRACE, FLR PNL TUN RR	97	Y	RH	10293682
2.	6-N19	10.230	NUT, I/P CTR SUPT BRKT (AT I/P CTR BRKT) (4.665)	97	Y	2	10281487
3.	6-N13	7.831	BAR, RR BPR IMP	97	Y	1	12533362
4.	6-A23	12.980	BRACKET, FLR PNL TUN PNL SI RR	97	Y	LH	10284287
	6-A23	12.980	BRACKET, FLR PNL TUN PNL SI RR	97	Y	RH	10284288
5.		N.S.	PANEL, FLR PNL TUN PNL SI ...		.....		
6.	6-N11	4.047	BRACKET, A/TRNS RANGE SEL LVR CBL (TO FRONT)	97	Y	1	10277347

cardiagn.com

							1Y12-065
7.		N.S.	REINFORCEMENT, TRANS CONT LVR BOOT				
8.	6-A23	12.980	BRACKET, FLR PNL TUN REINF	97	Y	LH	10250149
	6-A23	12.980	BRACKET, FLR PNL TUN REINF	97	Y	RH	10250150
9.		N.S.	REINFORCEMENT, FLR PNL TUN PNL				
10.	6-A23	12.980	BRACKET, FLR PNL TUN PNL SI FRT	97	Y	LH	10284285
	6-A23	12.980	BRACKET, FLR PNL TUN PNL SI FRT	97	Y	RH	10284286
11.	6-A23	12.980	EXTENSION, FLR PNL TUN PNL FRT UPR	97	Y	LH	10250158
	6-A23	12.980	EXTENSION, FLR PNL TUN PNL FRT UPR	97	Y	RH	10250159
12.		N.S.	BRACKET, CTLTC CONV H/SHLD				
13.	6-A22	12.975	REINFORCEMENT, FLR K/UP PNL	97	Y	LH	10299652
	6-A22	12.975	REINFORCEMENT, FLR K/UP PNL	97	Y	RH	10299653
14.	6-N11	3.690	SHIELD, CTLTC CONV HT	97	Y	LH	10259597
	6-N11	3.690	SHIELD, CTLTC CONV HT	97	Y	RH	10259598
15.	6-A23	12.980	EXTENSION, FLR PNL CTR TUN PNL FRT LWR (#41, INTERMEDIATE)	97	Y	RH	10425851
16.		N.S.	SPACER, I/P TIE LWR				
17.		N.S.	BRACKET, I/P LWR TIE BAR ("TO TUNNEL ATTACH")				
18.		N.S.	RAIL, U/B SI			LH	
19.	6-N13	7.831	BAR, FRT BPR IMP	97	Y	1	12533361
20.	6-A23	12.980	BRACE, FLR PNL TUN FRT	97	Y	RH	10293680
	6-A23	12.980	BRACE, FLR PNL TUN FRT	97	Y	LH	10444631
21.		N.S.	RAIL, U/B SI			RH	
22.		N.S.	BRACKET, PARK BRK LVR				
23.	6-N14	7.840	NUT, RR BPR ENGY ABS (TO IMPACT BAR) (4.665)	97	Y	3	10281487
24.	6-N9	2.559	STUD, WRG HARN GND	97	Y	6	10278878
25.		8.900	BOLT, W/WA (M6X1X25) (FLR PNL TUN REINF)	97	Y	3	11514139
26.	6-N11	3.162	STUD, FUEL FEED & RTN PIPE CLIP	97	Y	3	10267731
27.	6-N10	3.130	BRACKET, EVAP EMIS CNSTR PURGE SOL VLV	97	Y (LS1)	1	12560834
28.	6-A23	12.980	RAIL, U/B FRT SI (INCLUDES NUT 10281493)	97	Y	LH	12533430
	6-A23	12.980	RAIL, U/B FRT SI (INCLUDES NUT 10281493)	97	Y	RH	12533431
29.	6-A23	12.980	RAIL, U/B RR SI	97	Y	LH	12533432
	6-A23	12.980	RAIL, U/B RR SI	97	Y	RH	12533433
30.	6-A23	12.980	RAIL, U/B SI (CTR)	97	Y	LH	12533434
	6-A23	12.980	RAIL, U/B SI (CTR)	97	Y	RH	12533435
31.		N.S.	BRACKET, I/P LWR TIE BAR (TO TUNNEL ATTACH)				
32.	6-N13	7.831	NUT, FRT BPR FASCIA BRKT (BRKT TO BAR) (4.665)	97	Y	4	10281487
33.	6-N12	7.068	HOOK, FRT TOW	97	Y (V76) (EXPORT)	1	10281051
34.		N.S.	SPACER, U/B S/RL				

cardiagn.com

							1Y12-065
35.	6-N12	7.039	LOCATOR, FRT C/MBR	97	Y	4	10280876
36.	6-N12	7.039	LOCATOR, RR C/MBR	97	Y	4	10280876
37.	6-N12	7.068	HOOK, RR TOW	97	Y (V76) (EXPORT)	1	10281052

RPO DEFINITIONS
LS1 – ENGINE GAS, 8 CYL, 5.7L, SFI, ALUMINUM ENGINE
V76 – HOOK,FRONT TOW(EXPORT)

cardiagn.com

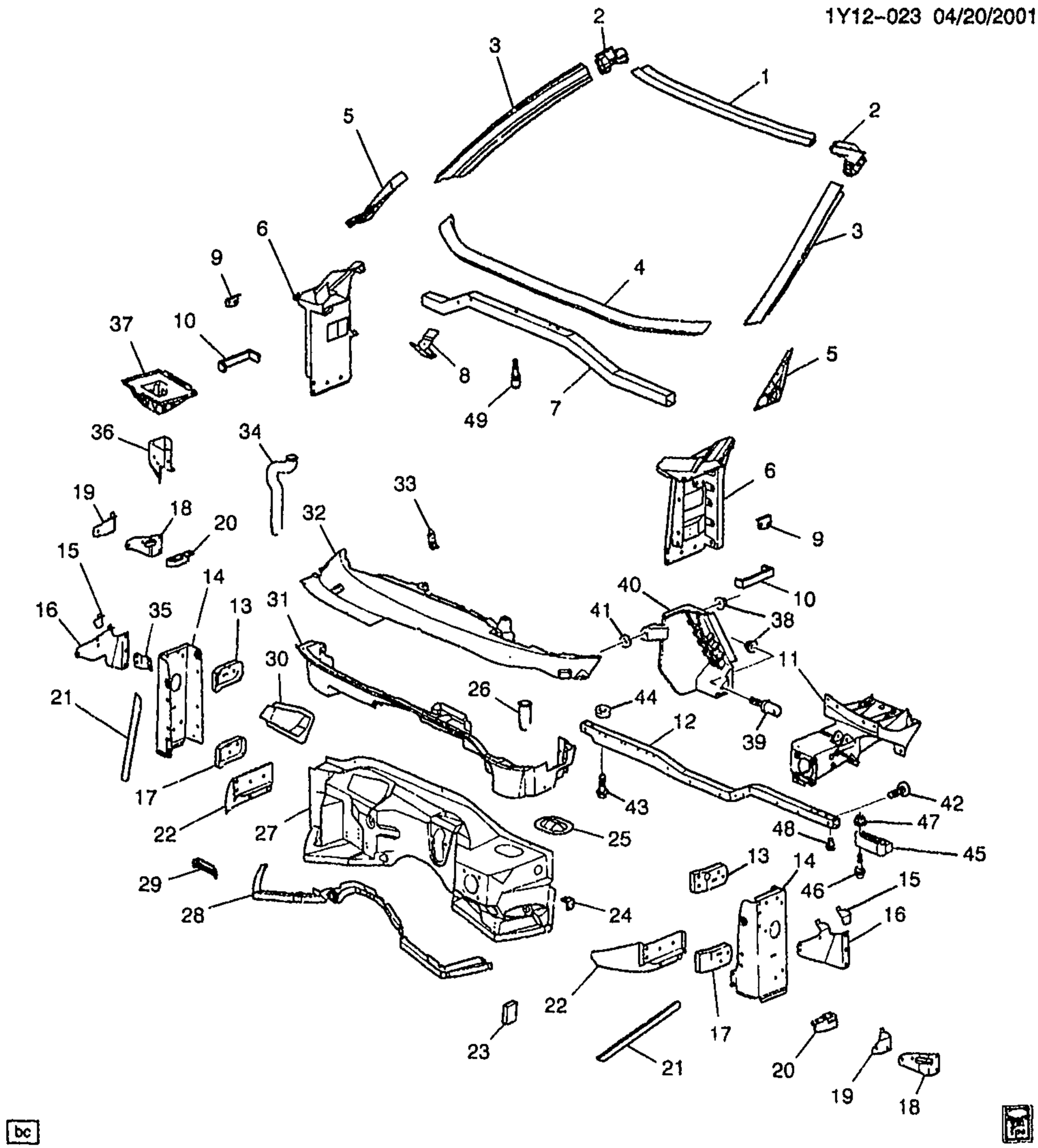

bc

1Y12-023

1997-2002 Y SHEET METAL/BODY PART 1 (DASH PANEL,H/PLR,WINDSHIELD)

1.	N.S.	FRAME, W/S UPR (SEE GROUP 10.000) (WINDSHIELD TRIM AND HARDWARE) FOR SERVICED W/S FRAME)	.....
2.	N.S.	FRAME, W/S OTR UPR COR	.....
3.	N.S.	FRAME, W/S SI	.....

© 2001 GENERAL MOTORS SERVICE PARTS OPERATIONS-CHEVROLET-15Y

cardiagn.com

							1Y12-023
4.		N.S.	FRAME, W/S LWR				
5.	6-N20	10.685	FILLER, FRT S/D WDO BELT FRT (W/PUSH PIN)	97-00	Y	LH	10260109
	6-N20	10.685	FILLER, FRT S/D WDO BELT FRT (W/PUSH PIN)	97-00	Y	RH	10260110
	6-N20	10.685	FILLER, FRT S/D WDO BELT FRT (W/O PUSH PIN)	01-02	Y	LH	10310079
	6-N20	10.685	FILLER, FRT S/D WDO BELT FRT (W/O PUSH PIN)	01-02	Y	RH	10310080
6.		N.S.	PANEL, BODY H/PLR INR UPR				
7.		N.S.	BAR, BODY H/PLR TIE				
8.		N.S.	SUPPORT, WSW SYS MDL				
9.		N.S.	EXTENSION, W/S LWR FRM				
10.		N.S.	SEAL, BODY H/PLR				
11.	6-N12	6.760	BRACKET, STRG COL (#52)	97-02	Y	1	10402879
12.	6-N19	10.230	BAR, I/P TIE (#47)	97-02	Y	1	10425866
13.		N.S.	REINFORCEMENT, FRT S/D UPR HGE (DR SI)				
14.	6-A18	12.840	PANEL, BODY H/PLR OTR	97-02	Y	LH	10431695
	6-A18	12.840	PANEL, BODY H/PLR OTR (#42)	99-02	Y	RH	10431696
15.		N.S.	REINFORCEMENT, HOOD PRIM LAT				
16.		N.S.	SUPPORT, HOOD LATCH PRIM OTR				
17.		N.S.	REINFORCEMENT, FRT S/D LWR HGE (DR SI)				
18.	6-N14	8.024	BRACKET, HOOD STOP	97-02	Y	LH	10277923
	6-N14	8.024	BRACKET, HOOD STOP	97-02	Y	RH	10277924
19.	6-N14	8.024	STOP, HOOD (INCLS 20)	97-02	Y	LH	10408730
	6-N14	8.024	STOP, HOOD (INCLS 20)	97-02	Y	RH	10408731
20.		N.S.	STOP, HOOD (PART OF 19)				
21.	6-A23	12.980	BRACE, U/B FRT S/RL UPR (7.039)	97-02	Y	LH	10262059
	6-A23	12.980	BRACE, U/B FRT S/RL UPR (7.039)	97-02	Y	RH	10262060
22.	6-A18	12.840	PANEL, BODY H/PLR INR LWR (#43)	97-02	Y	LH	10409987
	6-A18	12.840	PANEL, BODY H/PLR INR LWR (#43)	97-02	Y	RH	10409988
23.	6-A15	12.804	SEAL, PLNM PNL (4 1/4"X7 1/2") (TRIM AS REQ'D) (15.492)	97-02	Y	1	11515174
24.	6-N16	10.152	BRACKET, WSW MOT	97-02	Y	1	10264094
25.		N.S.	COVER, BRK PED HSG				
26.	6-A15	12.804	TUBE, PLNM DRN (POSN #1)	97-02	Y	3	14047487
27.	6-A15	12.804	PANEL, DA	97-02	Y	1	10424966
28.		N.S.	PANEL, DA LWR EXTN				
29.	6-N14	8.155	BRACKET, FRT W/H PNL	97-02	Y	1	10409585
30.		N.S.	DEFLECTOR, PLNM WAT				
31.	6-A15	12.804	PANEL, PLNM LWR	97-02	Y	1	10247310
32.	6-A15	12.804	PANEL, PLNM UPR	97-98	Y	1	10247311
	6-A15	12.804	PANEL, PLNM UPR	99-01	Y (EXC UV6)	1	10247311
	6-A15	12.804	PANEL, PLNM UPR	02	Y07-67 (EXC UV6)	1	10247311
	6-A15	12.804	PANEL, PLNM UPR	99-01	Y (UV6)	1	10410117
33.		N.S.	PLATE, A/C ACCUM ANC				
34.	6-A15	12.804	TUBE, PLNM DRN (POSN #2)	97-02	Y	1	10280066
35.		N.S.	SUPPORT, HOOD LATCH PRIM INR				

cardiagn.com

						1Y12–023	
36.	6–N8	2.333	SUPPORT, BAT TRAY	97–02	Y	1	10400530
37.	6–N8	2.333	TRAY, BAT (W/SUPT)	97–02	Y	1	10268430
38.		8.917	NUT, HEX W/CON WA 6X1X5.5 16–OD ZP 9 (DRVR F/RST BRKT)	97–02		2	11517293
39.		N.S.	BOLT, DRVR F/RST BRKT (RIVET STUD)			1	
40.	6–A23	12.980	BRACKET, DRVR F/RST	97–02	Y	1	10271958
41.	6–A23	12.980	SPACER, DRVR F/RST BRKT	97–02	Y	1	10278039
42.		8.900	BOLT/SCREW, HFH, M8X1.25X65, 9.8, PZOR, 7114 18 FLG OD (I/P TIE BAR) (QTY 4 AT HGE PLR/QTY 1 POSN #2 AT I/P TIE BAR)	97–02		5	11516344
43.		8.977	BOLT, HEX W/WA, M6X1X35, 9.8, POR, 24 OD, ABPT (I/P TIE BAR) (TO TUNNEL BRKT) (POSN #1)	97–02		2	11513947
44.	6–N19	10.230	SPACER, I/P (7.832)	97–02	Y	AR	10149281
45.	6–N19	10.230	REINFORCEMENT, I/P TIE BAR (POSN #1)	97–02	Y	1	10290611
	6–N19	10.230	REINFORCEMENT, I/P TIE BAR (POSN #2)	97–02	Y	1	10290612
46.		8.900	BOLT/SCREW, HFH, M8X1.25X65, 9.8, PZOR, 7114 18 FLG OD (I/P TIE BAR)	97–02	Y	AR	11516344
47.		8.917	NUT, HFH, M8X1.25, 17.9 OD, 738 THK, 13MM HEX, 10, ZF (I/P TIE BAR) (8.915) (AC–DELCO #11514596)	97–02	Y	AR	11514596
48.	6–N19	10.230	RETAINER, I/P TIE BAR (BLACK) (4.8 HOLE) (14.685)	97–02	Y	2	20538173
49.	6–A15	12.659	STUD, BODY H/PLR TIE BAR	97–02	Y	1	10290211

RPO DEFINITIONS
UV6 – DISPLAY,HEADUP

cardiagn.com

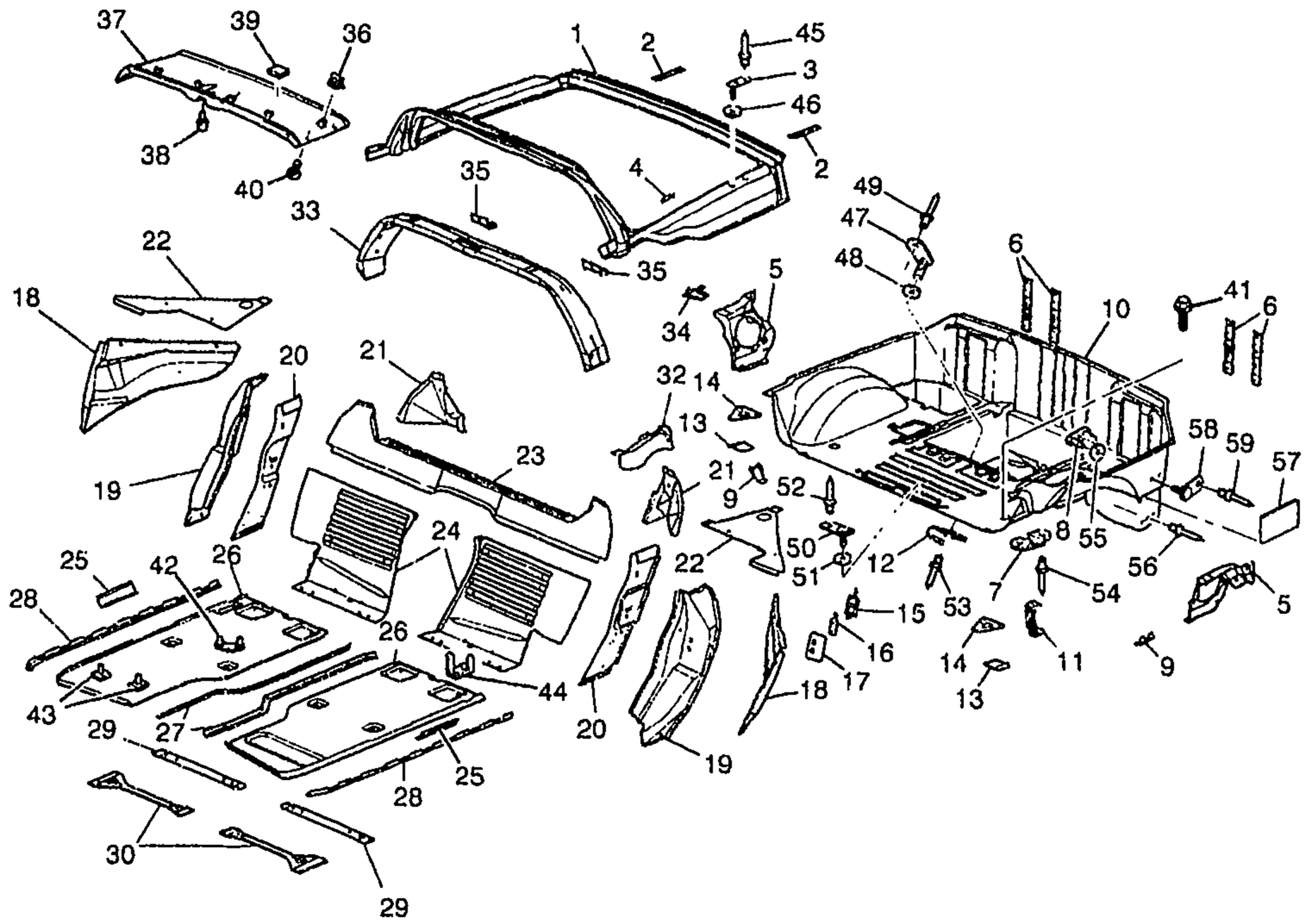

bc

1Y12-029

1997-2002 Y07 SHEET METAL/BODY PART 2 (FLOOR PANEL,BODY L/PLR,ROOF,R/CMPT)

1.		N.S.	FRAME, R/CMPT PNL		.....		
	6-A24	12.981	FRAME KIT, R/CMPT PNL	97-02	Y07	1	12457470
2.		N.S.	REINFORCEMENT, R/CMPT L/WDO BODY SI HGE	97-99	.....		
		N.S.	REINFORCEMENT, R/CMPT L/WDO HGE (BODY SI)	00-02	.....		
3.	6-N26	15.222	PLATE, CONVENIENCE NET UPR STUD (POSN #2) (4.785) ...	97-02	Y07	2	10404603
4.	6-A21	12.945	BRACKET, F/TNK FIL DR LK ACTR	97-02	Y	1	10280943
5.	6-N15	9.665	HOUSING, RDO RR SPKR (MTS SPKR)	97-02	Y07	LH	10288371
	6-N15	9.665	HOUSING, RDO RR SPKR (MTS SPKR)	97-02	Y07	RH	10288372

© 2001 GENERAL MOTORS SERVICE PARTS OPERATIONS-CHEVROLET-15Y

cardiagn.com

							1Y12-029
6.	6-A12	12.242	REINFORCEMENT, R/CMPT L/WDO LAT BRKT	97-02	Y07	4	10263147
7.	6-A21	12.944	BRACKET, RR W/H LNR	97-02	Y	6	10281372
8.	6-A22	12.966	PLATE, BODY UPR RR PNL SUPT ANC (12.980)	97-02	Y	2	10264812
9.	6-N12	5.380	BRACKET, RR SUSP UPR CONT ARM (RR)	97-02	Y	LH	10281367
	6-N12	5.380	BRACKET, RR SUSP UPR CONT ARM (RR)	97-02	Y	RH	10281368
10.	6-A24	12.981	PANEL KIT, R/CMPT FLR	97-02	Y	1	12455603
11.	6-N12	7.450	BRACKET, ELEK SUSP CONT MDL	97-02	Y (F45)	1	10280844
12.	6-N11	4.785	CLIP, PARK BRK RR CBL	97-02	Y	2	10281421
13.	6-N12	5.380	REINFORCEMENT, RR SUSP CONT ARM BRKT	97-02	Y	2	10280564
14.	6-A16	12.810	PLATE, RF LIFT OFF PNL/WDO STOW FRT BRKT STUD (UNDERSIDE OF R/CMPT PNL)	97-02	Y07	2	10284890
15.		N.S.	RETAINER, FRT S/D LK STKR ANC PLT				
16.		N.S.	PLATE, FRT S/D LK STKR ANC				
17.		N.S.	REINFORCEMENT, FRT S/D LK				
18.	6-A19	12.942	EXTENSION, BODY L/PLR OTR PNL	97-99	Y	LH	10252545
	6-A19	12.942	EXTENSION, BODY L/PLR OTR PNL	97-99	Y	RH	10252546
	6-A19	12.942	EXTENSION, BODY L/PLR OTR PNL	00-01	Y	LH	10428922
	6-A19	12.942	EXTENSION, BODY L/PLR OTR PNL	00	Y	RH	10428923
	6-A19	12.942	EXTENSION, BODY L/PLR OTR PNL (CARS BUILT WITH AND AFTER THE LAST EIGHT DIGIT OF VIN 15117747;FOR 2ND DESIGN SEE 10438547)	01	Y (1ST DES)	RH	10428923
	6-A19	12.942	EXTENSION, BODY L/PLR OTR PNL (CARS BUILT PRIOR TO LAST EIGHT DIGIT OF VIN 15117747;FOR 1ST DESIGN SEE 10440111)	01	Y (2ND DES)	RH	10438546
	6-A19	12.942	EXTENSION, BODY L/PLR OTR PNL	02	Y	LH	10438546
	6-A19	12.942	EXTENSION, BODY L/PLR OTR PNL (#111) (CARS BUILT PRIOR TO LAST EIGHT DIGIT OF VIN 15117747;FOR 1ST DESIGN SEE 10428923)	01	Y (2ND DES)	LH	10438547
	6-A19	12.942	EXTENSION, BODY L/PLR OTR PNL (#111)	02	Y	RH	10438547
19.	6-A19	12.942	PANEL, BODY L/PLR OTR (#54)	97-00	Y	LH	12369436
	6-A19	12.942	PANEL, BODY L/PLR OTR (#54)	97-00	Y	RH	12369437
	6-A19	12.942	PANEL, BODY L/PLR OTR (#54) (CARS BUILT PRIOR TO LAST EIGHT DIGIT OF VIN 15117747;FOR 1ST DESIGN SEE 88951187)	01	Y (2ND DES)	LH	12369436

cardiagn.com

							1Y12-029
	6-A19	12.942	PANEL, BODY L/PLR OTR (#54) (CARS BUILT PRIOR TO LAST EIGHT DIGIT OF VIN 15117747;FOR 1ST DESIGN SEE 88951188)	01	Y (2ND DES)	RH	12369437
	6-A19	12.942	PANEL, BODY L/PLR OTR (#54) (CARS BUILT WITH AND AFTER THE LAST EIGHT DIGIT OF VIN 15117747;FOR 2ND DESIGN SEE 12369436)	01	Y (1ST DES)	LH	88951187
	6-A19	12.942	PANEL, BODY L/PLR OTR (#54) (CARS BUILT WITH AND AFTER THE LAST EIGHT DIGIT OF VIN 15117747;FOR 2ND DESIGN SEE 12369437)	01	Y (1ST DES)	RH	88951188
	6-A19	12.942	PANEL, BODY L/PLR OTR (#54) .	02	Y	LH	88951187
	6-A19	12.942	PANEL, BODY L/PLR OTR (#54) .	02	Y	RH	88951188
20.	6-A21	12.944	PANEL, BODY L/PLR INR (#55) (12.942)	97-98	Y07	RH	12458932
	6-A21	12.944	PANEL, BODY L/PLR INR (#55) (12.942)	97-98	Y07	LH	12458933
	6-A21	12.944	PANEL, BODY L/PLR INR (#55) (12.942)	99-02	Y07-37	RH	12458932
	6-A21	12.944	PANEL, BODY L/PLR INR (#55) (12.942)	99-02	Y07-37	LH	12458933
21.	6-A19	12.942	EXTENSION, BODY L/PLR UPR TIE BAR (#114, INNER) (CARS BUILT PRIOR TO LAST EIGHT DIGIT OF VIN 15117747;FOR 1ST DESIGN SEE 10252541)	01	Y (2ND DES)	LH	10438474
	6-A19	12.942	EXTENSION, BODY L/PLR UPR TIE BAR (#114, INNER)	02	Y	LH	10438474
	6-A19	12.942	EXTENSION, BODY L/PLR UPR TIE BAR (ITEM #114) (INR)	97-98	Y	LH	10252541
	6-A19	12.942	EXTENSION, BODY L/PLR UPR TIE BAR (ITEM #114) (INR)	99	Y	LH	10296359
	6-A19	12.942	EXTENSION, BODY L/PLR UPR TIE BAR (ITEM #114) (INR)	00	Y	LH	10252541
	6-A19	12.942	EXTENSION, BODY L/PLR UPR TIE BAR (ITEM #114) (INR) (CARS BUILT WITH AND AFTER THE LAST EIGHT DIGIT OF VIN 15117747;FOR 2ND DESIGN SEE 10438474)	01	Y (1ST DES)	LH	10252541
	6-A19	12.942	EXTENSION, BODY L/PLR UPR TIE BAR (ITEM #114) (OTR)	97-02	Y	LH	10262081
	6-A19	12.942	EXTENSION, BODY L/PLR UPR TIE BAR (#114) (CARS BUILT PRIOR TO LAST EIGHT DIGIT OF VIN 15117747;FOR 1ST DESIGN SEE 10252542)	01	Y (2ND DES)	RH	10438475
	6-A19	12.942	EXTENSION, BODY L/PLR UPR TIE BAR (#114)	02	Y	RH	10438475
	6-A19	12.942	EXTENSION, BODY L/PLR UPR TIE BAR (ITEM #114)	97-00	Y	RH	10252542

cardiagn.com

							1Y12-029
	6-A19	12.942	EXTENSION, BODY L/PLR UPR TIE BAR (ITEM #114) (CARS BUILT WITH AND AFTER THE LAST EIGHT DIGIT OF VIN 15117747;FOR 2ND DESIGN SEE 10438475)	01	Y (1ST DES)	RH	10252542
22.	6-A23	12.980	EXTENSION FLR PNL TUN PNL RR UPR (ITEM #112)	97-02	Y	RH	10252540
	6-A23	12.980	EXTENSION, FLR PNL TUN PNL RR UPR (ITEM #112)	97-02	Y	LH	10438688
23.	6-A19	12.942	BAR, BODY L/PLR UPR TIE (#61)	97-00	Y	1	10412957
	6-A19	12.942	BAR, BODY L/PLR UPR TIE (#61) (CARS BUILT WITH AND AFTER THE LAST EIGHT DIGIT OF VIN 15117747;FOR 2ND DESIGN SEE 10438462)	01	Y (1ST DES)	1	10412957
	6-A19	12.942	BAR, BODY L/PLR UPR TIE (#61) (CARS BUILT PRIOR TO LAST EIGHT DIGIT OF VIN 15117747;FOR 1ST DESIGN SEE 10412957)	01	Y (2ND DES)	1	10438462
	6-A19	12.942	BAR, BODY L/PLR UPR TIE (#61)	02	Y	1	10438462
24.	6-N23	11.373	PANEL, F/SEAT BK BODY	97-99	Y	LH	10290554
	6-N23	11.373	PANEL, F/SEAT BK BODY	97-99	Y	RH	10290555
	6-N23	11.373	PANEL, F/SEAT BK BODY (W/O REINFORCEMENT) (10.527)	00	Y	RH	10409443
	6-N23	11.373	PANEL, F/SEAT BK BODY (W/O REINFORCEMENT)	00	Y	LH	10409444
	6-N23	11.373	PANEL, F/SEAT BK BODY (W/O REINFORCEMENT) (10.527) (CARS BUILT WITH AND AFTER THE LAST EIGHT DIGIT OF VIN 15117747;FOR 2ND DESIGN SEE 10449456)	01	Y (1ST DES)	RH	10409443
	6-N23	11.373	PANEL, F/SEAT BK BODY (W/O REINFORCEMENT) (CARS BUILT WITH AND AFTER THE LAST EIGHT DIGIT OF VIN 15117747;FOR 2ND DESIGN SEE 10449455)	01	Y (1ST DES)	LH	10409444
	6-N23	11.373	PANEL, F/SEAT BK BODY	02	Y	LH	10449455
	6-N23	11.373	PANEL, F/SEAT BK BODY	02	Y	RH	10449456
	6-N23	11.373	PANEL, F/SEAT BK BODY (CARS BUILT PRIOR TO LAST 8 DIGITS OF VIN 15117747)	01	Y (2ND DES)	LH	10449455
	6-N23	11.373	PANEL, F/SEAT BK BODY (CARS BUILT PRIOR TO LAST 8 DIGITS OF VIN 15117747)	01	Y (2ND DES)	RH	10449456
25.	6-A23	12.980	SUPPORT, FLR PNL (UPR/OTR) (POSN #2)	97-02	Y	2	10277079
26.		N.S.	PANEL, FLR (KIT INCLS FLR PNL & SUPT) (*KIT1)		.....		
27.		N.S.	SUPPORT, FLR PNL (INBOARD UPR) (POSN #1)		.....		
28.		N.S.	SUPPORT, FLR PNL (KIT INCLS FLR PNL & SUPT) (*KIT1)		.....	LH	
		N.S.	SUPPORT, FLR PNL (*KIT1)		.....	RH	
29.	6-A23	12.980	BAR, FLR PNL #2 CR	97-02	Y	2	10410261

cardiagn.com

							1Y12–029
30.	6–A23	12.980	BAR, FLR PNL #1 CR (#30.2) ...	97–02	Y	2	10247225
32.	6–A19	12.942	EXTENSION, BODY L/PLR UPR TIE BAR (OTR) (LH ONLY)	97–02	Y	1	10262081
33.	6–A22	12.952	BOW, RF PNL	99–02	Y07	1	12459091
	6–A22	12.952	BOW, RF PNL (#62)	97–98	Y07	1	12455670
34.	6–N19	10.485	BRACKET, R/CON DR LK RCVR .	97–02	Y	1	10282800
35.		N.S.	REINFORCEMENT, R/CMPT L/WDO BODY SI HGE		.....		
36.	6–N25	14.640	CLIP, RF RR INR T/PNL RET (PART OF 37) (13.0MM WIDE) (YELLOW) (U–BASE) (16.575) ...	97–02	Y07	4	15748479
37.	6–N25	14.640	PANEL, HDLNG RR TR (INCLS 36, 38, 39) (BLACK)	97–02	Y07	1	10406506
38.	6–A18	12.811	BUMPER, RF LIFT OFF PNL/WDO RR LAT HDL (PART OF 37)	97–02	Y07	1	10290999
39.		8.958	TAPE, DUAL LK FSTN (44.5MM X 44.5MM – 5 PER PKG) (RF RR INR T/PNL) (PART OF 37) (2.483)	97–02	.....	2	12520053
40.	6–N25	14.640	RETAINER, HDLNG RR T/PNL (BLACK) (4.8 HOLE) (14.685)	97–02	Y07	4	20538173
41.		8.977	BOLT, HFH, W/FL WA, TAP, M4.2X1.41X16, 6172M, POR, 12.5MM FL WA, BSSD (RR CMPT PNL TO SI RL)	97–02	.....	6	11513942
42.	6–N12	7.440	BRACKET, VEH LATL ACCLRM ..	98–02	Y (JL4)	1	10290470
		N.S.	BRACKET, VEH LATL ACCLRM (NOT USED IN 1997)	97	.....		
43.	6–N8	2.483	PLATE, MULTIUSE RLY BRKT STUD (M6 X 1 X 24) (1.271)	97	Y	2	10135646
	6–N8	2.483	PLATE, MULTIUSE RLY BRKT STUD (BRACKET REPLACES CENTER–MOST OF THE THREE SIMILAR BRACKETS ON THE PASSENGER SIDE OF DASHBOARD & BOTH BRACKETS ON DRIVER SIDE OF DASHBOARD) (3.162)	97	Y	1	10402723
	6–N8	2.483	PLATE, MULTIUSE RLY BRKT STUD (BRACKET REPLACES THE TWO OUTBOARD OF THE THREE SIMILAR BRACKETS ON THE PASSENGER SIDE OF DASHBOARD) (12.986)	97	Y	1	14058658
	6–N8	2.483	STUD, MULTIUSE RLY BRKT (ANC PLT) (M6 X 1 X 24) (1.271) .	98–02	Y	2	10135646
	6–N8	2.483	STUD, MULTIUSE RLY BRKT (ANC PLT) (M6 X 1 X 24) (1.271) .	98–01	Y	2	10135646
44.	6–B6	13.090	CLIP, BODY FRT WRG HARN	97–02	Y	4	21020632
45.		N.S.	RIVET, CONVENIENCE NET UPR STUD PLT		.....		
46.	6–N26	15.222	SEAL, CONVENIENCE NET UPR STUD PLT	98–02	Y07	2	10415038
		N.S.	ADHESIVE, CONVENIENCE NET UPR STUD PLT	97	.....		
47.	6–N11	4.785	PLATE, PARK BRK RR CBL CLIP STUD	97–02	Y	2	10404603

cardiagn.com

							1Y12-029
48.	6-N11	4.785	SEAL, PARK BRK RR CBL CLIP STUD PLT (15.222)	98-02	Y	2	10415038
		N.S.	ADHESIVE, PARK BRK RR CBL CLIP STUD PLT	97			
49.		N.S.	RIVET, PARK BRK RR CBL CLIP STUD PLT				
50.	6-N11	3.162	PLATE, FUEL FEED PIPE CLIP STUD	97-02	Y	2	10402723
51.	6-N11	3.162	SEAL, FUEL FEED PIPE CLIP STUD PLT (15.222)	98-00	Y	2	10415038
		N.S.	SEALER, FUEL FEED PIPE CLIP STUD PLT	01-02			
		N.S.	ADHESIVE, FUEL FEED PIPE CLIP STUD PLT	97			
52.		N.S.	RIVET, FUEL FEED PIPE CLIP				
53.		N.S.	RIVET, PARK BRK RR CBL CLIP				
54.		N.S.	RIVET, RR W/H LNR BRKT				
55.	6-A22	12.966	SEAL, BODY UPR RR PNL SUPT ANC PLT (15.222)	98-02	Y	4	10415038
		N.S.	ADHESIVE, BODY UPR RR PNL	97			
56.		N.S.	RIVET, BODY UPR RR PNL SUPT STUD PLT				
57.	6-N26	15.222	SEAL, CONVENIENCE NET LWR STUD PLT (4 1/4"X7 1/2") (TRIM AS REQ'D) (15.492)	98-02	YY07	2	11515174
		N.S.	ADHESIVE, CONVENIENCE NET LWR STUD PLT	97			
58.	6-N26	15.222	PLATE, CONVENIENCE NET LWR STUD (4.785)	97-02	Y07	2	10404603
59.		N.S.	RIVET, CONVENIENCE NET LWR STUD PLT				

SERVICE KITS

1.	6-A23	12.980	PANEL KIT, FLR (INCLS 26, 28)	97-01	Y	RH	12455606
	6-A23	12.980	PANEL KIT, FLR (#70) (INCLS 26, 28)	97-02	Y	LH	12493114

RPO DEFINITIONS
F45 – CHASSIS CONTINUOUS VALVE REAL TIME DAMPING
JL4 – CONTROL ACTIVE BRAKE

cardiagn.com

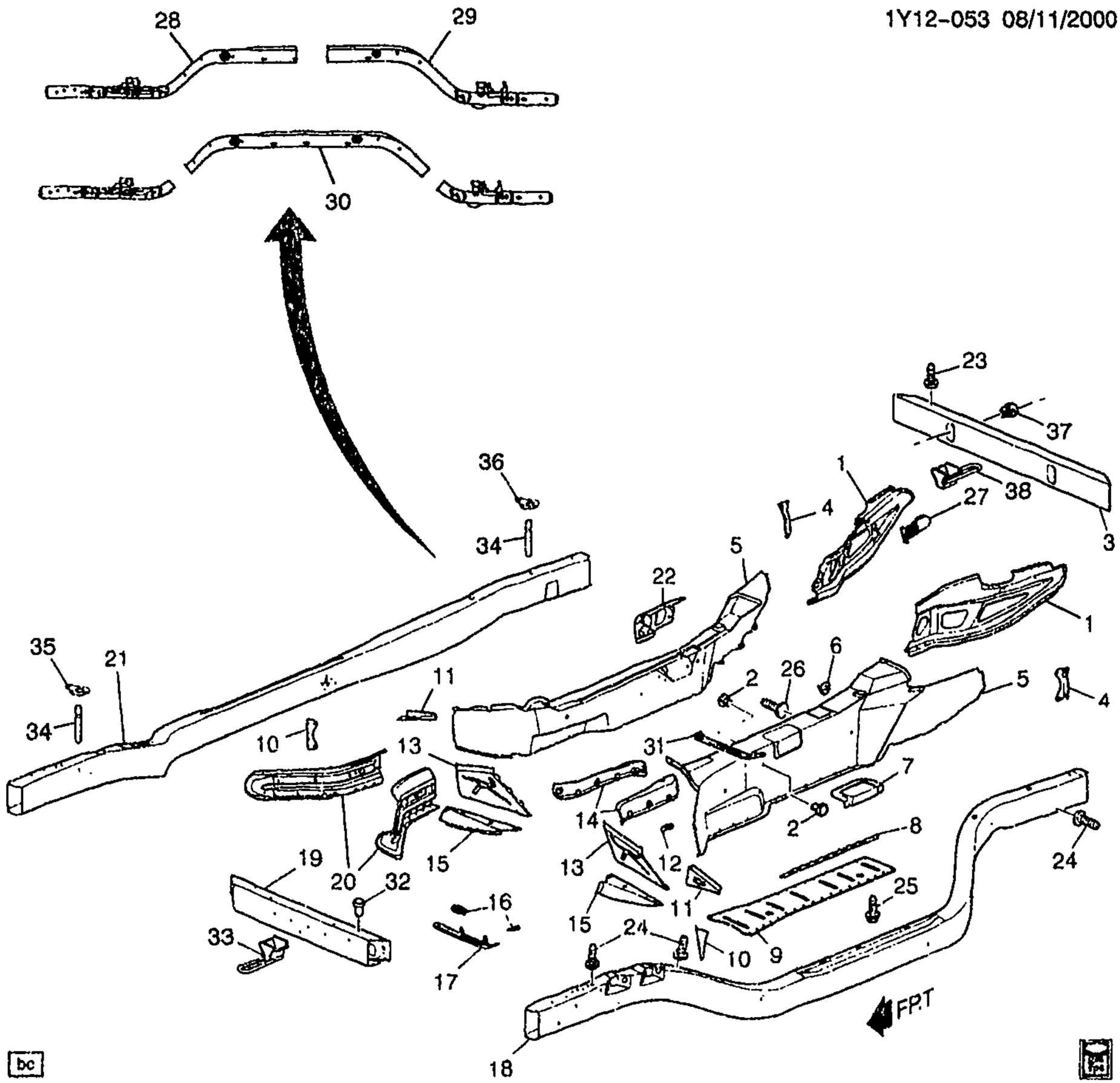

1Y12-053

1998 Y SHEET METAL/BODY PART 3 (BUMPER BARS,TUNNEL,RAILS)

1.	6-A23	12.980	BRACE, FLR PNL TUN RR	98	Y	LH	10293681
	6-A23	12.980	BRACE, FLR PNL TUN RR	98	Y	RH	10293682
2.	6-N19	10.230	NUT, I/P CTR SUPT BRKT (AT I/P CTR BRKT) (4.665)	98	Y	2	10281487
3.	6-N13	7.831	BAR, RR BPR IMP	98	Y	1	12533362
4.	6-A23	12.980	BRACKET, FLR PNL TUN PNL SI RR	98	Y	LH	10284287
	6-A23	12.980	BRACKET, FLR PNL TUN PNL SI RR	98	Y	RH	10284288
5.		N.S.	PANEL, FLR PNL TUN PNL SI ...		.....		
6.	6-N11	4.047	BRACKET, A/TRNS RANGE SEL LVR CBL (TO FRONT)	98	Y	1	10277347

cardiagn.com

							1Y12-053
7.		N.S.	REINFORCEMENT, TRANS CONT LVR BOOT				
8.	6-A23	12.980	BRACKET, FLR PNL TUN REINF	98	Y	LH	10250149
	6-A23	12.980	BRACKET, FLR PNL TUN REINF	98	Y	RH	10250150
9.	6-A23	12.980	REINFORCEMENT, FLR PNL TUN PNL (#33)	98	Y	1	10250151
10.	6-A23	12.980	BRACKET, FLR PNL TUN PNL SI FRT	98	Y	LH	10284285
	6-A23	12.980	BRACKET, FLR PNL TUN PNL SI FRT	98	Y	RH	10284286
11.	6-A23	12.980	EXTENSION, FLR PNL TUN PNL FRT UPR	98	Y	LH	10250158
	6-A23	12.980	EXTENSION, FLR PNL TUN PNL FRT UPR	98	Y	RH	10250159
12.		N.S.	BRACKET, CTLTC CONV H/SHLD				
13.	6-A22	12.975	REINFORCEMENT, FLR K/UP PNL	98	Y	LH	10299652
	6-A22	12.975	REINFORCEMENT, FLR K/UP PNL	98	Y	RH	10299653
14.	6-N11	3.690	SHIELD, CTLTC CONV HT	98	Y	LH	10259597
	6-N11	3.690	SHIELD, CTLTC CONV HT	98	Y	RH	10259598
15.	6-A23	12.980	EXTENSION, FLR PNL CTR TUN PNL FRT LWR (#41, INTERMEDIATE)	98	Y	RH	10425851
16.		N.S.	SPACER, I/P TIE LWR				
17.		N.S.	BRACKET, I/P LWR TIE BAR ("TO TUNNEL ATTACH")				
18.		N.S.	RAIL, U/B SI			LH	
19.	6-N13	7.831	BAR, FRT BPR IMP	98	Y	1	12533361
20.	6-A23	12.980	BRACE, FLR PNL TUN FRT	98	Y	RH	10293680
	6-A23	12.980	BRACE, FLR PNL TUN FRT	98	Y	LH	10444631
21.		N.S.	RAIL, U/B SI			RH	
22.		N.S.	BRACKET, PARK BRK LVR				
23.	6-N14	9.647	STUD, RDO ANT (ANTENNA GROUND) (2.559)	98	Y67	1	10278878
24.	6-N9	2.559	STUD, WRG HARN GND	98	Y	6	10278878
25.		8.900	BOLT, W/WA (M6X1X25) (FLR PNL TUN REINF)	98	Y	3	11514139
26.	6-N11	3.162	STUD, FUEL FEED & RTN PIPE CLIP	98	Y	3	10267731
27.	6-N10	3.130	BRACKET, EVAP EMIS CNSTR PURGE SOL VLV	98	Y (LS1)	1	12560884
28.	6-A23	12.980	RAIL, U/B FRT SI (INCLUDES NUT 10281493)	98	Y	LH	12533430
	6-A23	12.980	RAIL, U/B FRT SI (INCLUDES NUT 10281493)	98	Y	RH	12533431
29.	6-A23	12.980	RAIL, U/B RR SI	98	Y	LH	12533432
	6-A23	12.980	RAIL, U/B RR SI	98	Y	RH	12533433
30.	6-A23	12.980	RAIL, U/B SI (CTR)	98	Y	LH	12533434
	6-A23	12.980	RAIL, U/B SI (CTR)	98	Y	RH	12533435
31.		N.S.	BRACKET, I/P LWR TIE BAR (TO TUNNEL ATTACH)				
32.	6-N13	7.831	NUT, FRT BPR FASCIA BRKT (BRKT TO BAR) (4.665)	98	Y	4	10281487
33.	6-N12	7.068	HOOK, FRT TOW	98	Y (V76) (EXPORT)	1	10281051
34.		N.S.	SPACER, U/B S/RL				

cardiagn.com

							1Y12–053
35.	6–N12	7.039	LOCATOR, FRT C/MBR	98	Y	4	10280876
36.	6–N12	7.039	LOCATOR, RR C/MBR	98	Y	4	10280876
37.	6–N14	7.840	NUT, RR BPR ENGY ABS (TO IMPACT BAR) (4.665)	98	Y	3	10281487
38.	6–N12	7.068	HOOK, RR TOW	98	Y (V76) (EXPORT)	1	10281052

RPO DEFINITIONS
LS1 – ENGINE GAS, 8 CYL, 5.7L, SFI, ALUMINUM ENGINE
V76 – HOOK,FRONT TOW(EXPORT)

cardiagn.com

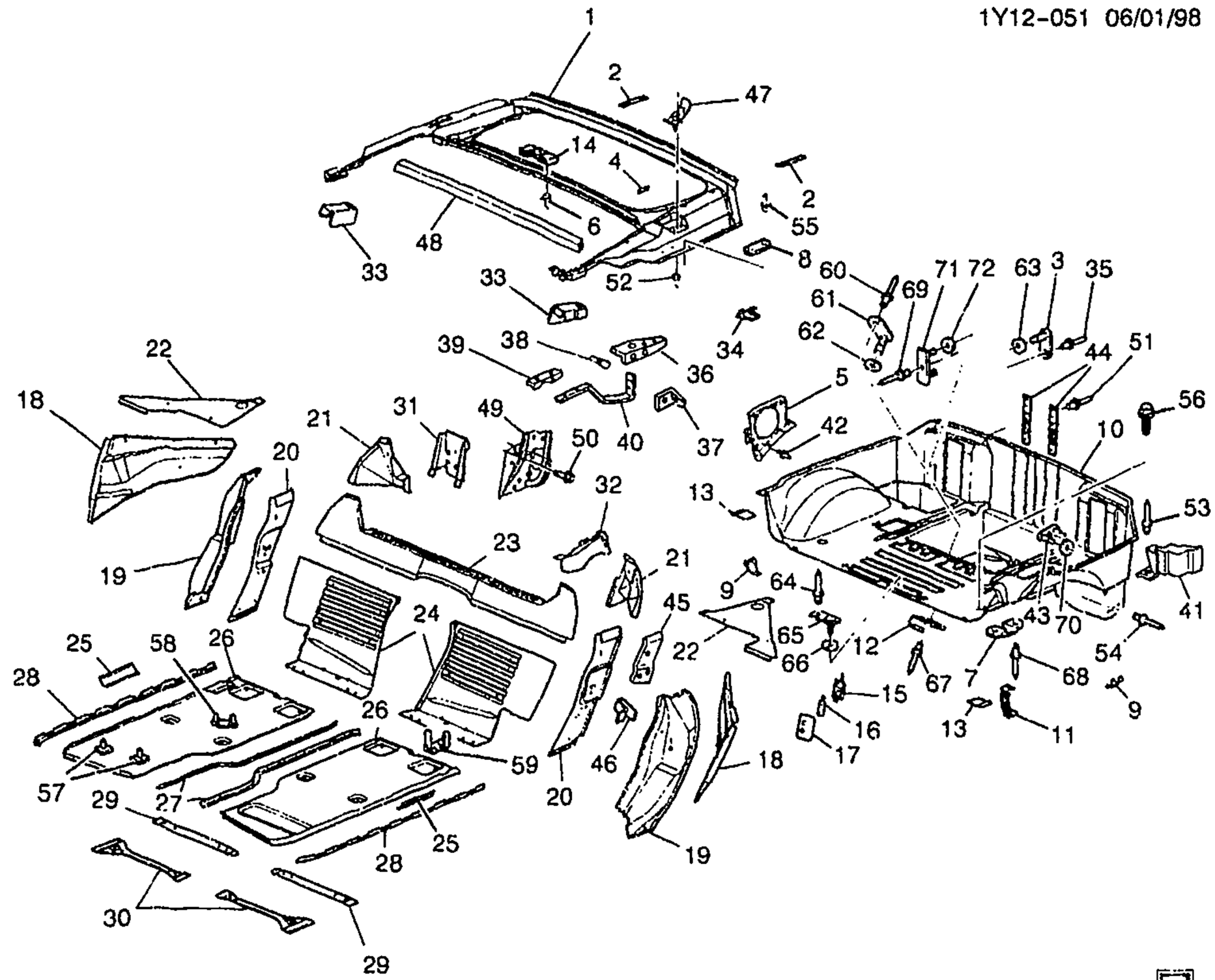

yv

1Y12-051

1998-2002 Y67 SHEET METAL/BODY PART 2 (FLOOR PANEL,BODY L/PLR,ROOF,R/CMPT)

1.	6-A24	12.981	FRAME, R/CMPT PNL	98-02	Y67	1	10410425
2.	6-A10	12.184	PLATE, R/CMPT LID HGE ANC	98-02	Y67	2	10289507
3.	6-N26	15.222	PLATE, CONVENIENCE NET STUD (4.785)	98-02	YY37-67	4	10404603
	6-N26	15.222	SEAL, CONVENIENCE NET ANC PLT	98-02	YY37-67	4	10415038
4.	6-A21	12.945	BRACKET, F/TNK FIL DR LK ACTR	98-02	Y	1	10280943
5.	6-N15	9.665	HOUSING, RDO RR SPKR	98-02	Y67	LH	10272205
	6-N15	9.665	HOUSING, RDO RR SPKR	98-02	Y67	RH	10272206
6.		N.S.	RIVET, F/TOP STOW COMPT BRKT				
7.	6-A21	12.944	BRACKET, RR W/H LNR	98-02	Y	6	10281372
8.	6-A24	12.981	REINFORCEMENT, R/CMPT PNL FRM (2 PLATES EACH SIDE) (1 ON TOP OF FRAME, 1 ON UNDERSIDE FLANGE OF PANEL) (12.980)	98-02	Y67	4	10264812

cardiagn.com

							1Y12-051
9.	6-N12	5.380	BRACKET, RR SUSP UPR CONT ARM (RR)	98-02	Y	LH	10281367
	6-N12	5.380	BRACKET, RR SUSP UPR CONT ARM (RR)	98-02	Y	RH	10281368
10.	6-A24	12.981	PANEL KIT, R/CMPT FLR	98-02	Y	1	12455603
11.	6-N12	7.450	BRACKET, ELEK SUSP CONT MDL	98-02	Y (F45)	1	10280844
12.	6-N11	4.785	CLIP, PARK BRK RR CBL	98-02	Y	2	10281421
13.	6-N12	5.380	REINFORCEMENT, RR SUSP CONT ARM BRKT	98-02	Y	2	10280564
14.	6-A8	12.170	BRACKET, F/TOP STOW COMPT LID BPR	98-02	Y67	1	10405605
15.		N.S.	RETAINER, FRT S/D LK STKR ANC PLT				
16.		N.S.	PLATE, FRT S/D LK STKR ANC				
17.		N.S.	REINFORCEMENT, FRT S/D LK				
18.	6-A19	12.942	EXTENSION, BODY L/PLR OTR PNL	98-99	Y	LH	10252545
	6-A19	12.942	EXTENSION, BODY L/PLR OTR PNL	98-99	Y	RH	10252546
	6-A19	12.942	EXTENSION, BODY L/PLR OTR PNL	00-01	Y	LH	10428922
	6-A19	12.942	EXTENSION, BODY L/PLR OTR PNL	00	Y	RH	10428923
	6-A19	12.942	EXTENSION, BODY L/PLR OTR PNL (CARS BUILT WITH AND AFTER THE LAST EIGHT DIGIT OF VIN 15117747;FOR 2ND DESIGN SEE 10438547)	01	Y (1ST DES)	RH	10428923
	6-A19	12.942	EXTENSION, BODY L/PLR OTR PNL (CARS BUILT PRIOR TO LAST EIGHT DIGIT OF VIN 15117747;FOR 1ST DESIGN SEE 10440111)	01	Y (2ND DES)	RH	10438546
	6-A19	12.942	EXTENSION, BODY L/PLR OTR PNL	02	Y	LH	10438546
	6-A19	12.942	EXTENSION, BODY L/PLR OTR PNL (#111) (CARS BUILT PRIOR TO LAST EIGHT DIGIT OF VIN 15117747;FOR 1ST DESIGN SEE 10428923)	01	Y (2ND DES)	LH	10438547
	6-A19	12.942	EXTENSION, BODY L/PLR OTR PNL (#111)	02	Y	RH	10438547
19.	6-A19	12.942	PANEL, BODY L/PLR OTR (#54)	98-00	Y	LH	12369436
	6-A19	12.942	PANEL, BODY L/PLR OTR (#54)	98-00	Y	RH	12369437
	6-A19	12.942	PANEL, BODY L/PLR OTR (#54) (CARS BUILT PRIOR TO LAST EIGHT DIGIT OF VIN 15117747;FOR 1ST DESIGN SEE 88951187)	01	Y (2ND DES)	LH	12369436
	6-A19	12.942	PANEL, BODY L/PLR OTR (#54) (CARS BUILT PRIOR TO LAST EIGHT DIGIT OF VIN 15117747;FOR 1ST DESIGN SEE 88951188)	01	Y (2ND DES)	RH	12369437

cardiagn.com

							1Y12-051
	6-A19	12.942	PANEL, BODY L/PLR OTR (#54) (CARS BUILT WITH AND AFTER THE LAST EIGHT DIGIT OF VIN 15117747;FOR 2ND DESIGN SEE 12369436)	01	Y (1ST DES)	LH	88951187
	6-A19	12.942	PANEL, BODY L/PLR OTR (#54) (CARS BUILT WITH AND AFTER THE LAST EIGHT DIGIT OF VIN 15117747;FOR 2ND DESIGN SEE 12369437)	01	Y (1ST DES)	RH	88951188
	6-A19	12.942	PANEL, BODY L/PLR OTR (#54) .	02	Y	LH	88951187
	6-A19	12.942	PANEL, BODY L/PLR OTR (#54) .	02	Y	RH	88951188
20.	6-A21	12.944	PANEL, BODY L/PLR INR (INCLS 45)	98-02	Y67	RH	12458930
	6-A21	12.944	PANEL, BODY L/PLR INR (INCLS 45)	98-02	Y67	LH	12458931
21.	6-A19	12.942	EXTENSION, BODY L/PLR UPR TIE BAR (#114, INNER) (CARS BUILT PRIOR TO LAST EIGHT DIGIT OF VIN 15117747;FOR 1ST DESIGN SEE 10252541)	01	Y (2ND DES)	LH	10438474
	6-A19	12.942	EXTENSION, BODY L/PLR UPR TIE BAR (#114, INNER)	02	Y	LH	10438474
	6-A19	12.942	EXTENSION, BODY L/PLR UPR TIE BAR (ITEM #114) (INR)	98	Y	LH	10252541
	6-A19	12.942	EXTENSION, BODY L/PLR UPR TIE BAR (ITEM #114) (INR)	99	Y	LH	10296359
	6-A19	12.942	EXTENSION, BODY L/PLR UPR TIE BAR (ITEM #114) (INR)	00	Y	LH	10252541
	6-A19	12.942	EXTENSION, BODY L/PLR UPR TIE BAR (ITEM #114) (INR) (CARS BUILT WITH AND AFTER THE LAST EIGHT DIGIT OF VIN 15117747;FOR 2ND DESIGN SEE 10438474)	01	Y (1ST DES)	LH	10252541
	6-A19	12.942	EXTENSION, BODY L/PLR UPR TIE BAR (ITEM #114) (OTR)	98-02	Y	LH	10262081
	6-A19	12.942	EXTENSION, BODY L/PLR UPR TIE BAR (#114) (CARS BUILT PRIOR TO LAST EIGHT DIGIT OF VIN 15117747;FOR 1ST DESIGN SEE 10252542)	01	Y (2ND DES)	RH	10438475
	6-A19	12.942	EXTENSION, BODY L/PLR UPR TIE BAR (#114)	02	Y	RH	10438475
	6-A19	12.942	EXTENSION, BODY L/PLR UPR TIE BAR (ITEM #114)	98-00	Y	RH	10252542
	6-A19	12.942	EXTENSION, BODY L/PLR UPR TIE BAR (ITEM #114) (CARS BUILT WITH AND AFTER THE LAST EIGHT DIGIT OF VIN 15117747;FOR 2ND DESIGN SEE 10438475)	01	Y (1ST DES)	RH	10252542
22.	6-A23	12.980	EXTENSION, FLR PNL TUN PNL. RR UPR (ITEM #112)	98-02	Y	RH	10252540
	6-A23	12.980	EXTENSION, FLR PNL TUN PNL RR UPR (ITEM #112)	98-02	Y	LH	10438688
23.	6-A19	12.942	BAR, BODY L/PLR UPR TIE (#61)	98-00	Y	1	10412957

cardiagn.com

							1Y12-051
	6-A19	12.942	BAR, BODY L/PLR UPR TIE (#61) (CARS BUILT WITH AND AFTER THE LAST EIGHT DIGIT OF VIN 15117747;FOR 2ND DESIGN SEE 10438462)	01	Y (1ST DES)	1	10412957
	6-A19	12.942	BAR, BODY L/PLR UPR TIE (#61) (CARS BUILT PRIOR TO LAST EIGHT DIGIT OF VIN 15117747;FOR 1ST DESIGN SEE 10412957)	01	Y (2ND DES)	1	10438462
	6-A19	12.942	BAR, BODY L/PLR UPR TIE (#61)	02	Y	1	10438462
24.	6-N23	11.373	PANEL, F/SEAT BK BODY	98-99	Y	LH	10290554
	6-N23	11.373	PANEL, F/SEAT BK BODY	98-99	Y	RH	10290555
	6-N23	11.373	PANEL, F/SEAT BK BODY (W/O REINFORCEMENT) (10.527)	00	Y	RH	10409443
	6-N23	11.373	PANEL, F/SEAT BK BODY (W/O REINFORCEMENT)	00	Y	LH	10409444
	6-N23	11.373	PANEL, F/SEAT BK BODY (W/O REINFORCEMENT) (10.527) (CARS BUILT WITH AND AFTER THE LAST EIGHT DIGIT OF VIN 15117747;FOR 2ND DESIGN SEE 10449456)	01	Y (1ST DES)	RH	10409443
	6-N23	11.373	PANEL, F/SEAT BK BODY (W/O REINFORCEMENT) (CARS BUILT WITH AND AFTER THE LAST EIGHT DIGIT OF VIN 15117747;FOR 2ND DESIGN SEE 10449455)	01	Y (1ST DES)	LH	10409444
	6-N23	11.373	PANEL, F/SEAT BK BODY	02	Y	LH	10449455
	6-N23	11.373	PANEL, F/SEAT BK BODY	02	Y	RH	10449456
	6-N23	11.373	PANEL, F/SEAT BK BODY (CARS BUILT PRIOR TO LAST 8 DIGITS OF VIN 15117747)	01	Y (2ND DES)	LH	10449455
	6-N23	11.373	PANEL, F/SEAT BK BODY (CARS BUILT PRIOR TO LAST 8 DIGITS OF VIN 15117747)	01	Y (2ND DES)	RH	10449456
25.	6-A23	12.980	SUPPORT, FLR PNL (POSN #2)	98-02	Y	2	10277079
26.	6-A23	12.980	PANEL KIT, FLR			LH	12493114
	6-A23	12.980	PANEL KIT, FLR			RH	12455606
27.		N.S.	SUPPORT, FLR PNL (INBOARD/UPR) (POSN #1)				
28.		N.S.	SUPPORT, FLR PNL			LH	
		N.S.	SUPPORT, FLR PNL			RH	
29.	6-A23	12.980	BAR, FLR PNL #2 CR	98-02	Y	2	10410261
30.	6-A23	12.980	BAR, FLR PNL #1 CR (#30.2)	98-02	Y	2	10247225
31.	6-A8	12.170	BRACKET, F/TOP STOW COMPT LID LAT	98-02	Y67	1	10404536
32.	6-A19	12.942	EXTENSION, BODY L/PLR UPR TIE BAR (OTR) (LH ONLY)	98-02	Y	1	10262081
33.	6-A19	12.942	PANEL, BODY L/PLR OTR UPR	98-02	Y67	LH	10414164
	6-A19	12.942	PANEL, BODY L/PLR OTR UPR	98-02	Y67	RH	10414165
34.	6-N19	10.485	BRACKET, R/CON DR LK RCVR	98-02	Y	1	10282800
35.		N.S.	RIVET, CONVENIENCE NET ANC PLT				
36.		N.S.	BRACKET, F/TOP STOW COMPT LID LAT				

cardiagn.com

							1Y12-051
37.	6-A8	12.170	BRACKET, F/TOP STOW COMPT LID BPR	98-02	Y67	1	10405605
38.	6-A8	12.170	BUMPER, F/TOP STOW COMPT LID HGE	98-02	Y67	2	10278609
39.		N.S.	BRACKET, F/TOP STOW COMPT LID HGE				
40.		N.S.	LINK, F/TOP STOW COMPT LID HGE				
41.	6-A24	12.981	SUPPORT, R/CMPT PNL FRM	98	Y67	RH	10408901
	6-A24	12.981	SUPPORT, R/CMPT PNL FRM	98	Y67	LH	10408902
	6-A24	12.981	SUPPORT, R/CMPT PNL FRM	99-02	Y37-67	RH	10408901
	6-A24	12.981	SUPPORT, R/CMPT PNL FRM	99-02	Y37-67	LH	10408902
42.		N.S.	RIVET, RDO RR SPKR HSG			4	
43.	6-A22	12.966	PLATE, BODY UPR RR PNL SUPT ANC (12.980)	98-02	Y	2	10264812
	6-A22	12.966	SEAL, BODY UPR RR PNL SUPT ANC PLT (15.222)	98-02	Y	4	10415038
44.	6-A11	12.237	REINFORCEMENT, R/CMPT LID LAT SUPT	98-02	Y67	2	10279694
45.		N.S.	REINFORCEMENT, BODY L/PLR INR PNL UPR (PART OF 20)				
46.	6-A19	12.942	REINFORCEMENT, BODY L/PLR	98-02	Y67	2	10279074
47.	6-A8	12.170	PLATE, F/TOP STOW COMPT LID HGE ANC	98-02	Y67	LH	10279082
	6-A8	12.170	PLATE, F/TOP STOW COMPT LID HGE ANC	98-02	Y67	RH	10284586
48.	6-A24	12.981	REINFORCEMENT, R/CMPT PNL FRM	98-02	Y67	1	10282732
49.	6-N26	14.875	BRACKET, D/SEAT SHLDR BELT GDE	98-02	Y67	1	10402798
	6-N26	14.875	BRACKET, P/SEAT SHLDR BELT GDE	98-02	Y67	1	10402807
50.		8.900	BOLT-HEX, M8X1.25X30, 22 THD, 24MM OD, 9.8, 7114M (D/ST SHLDR BELT GDE BRKT)	98-02		2	11516594
		8.900	BOLT-HEX, M8X1.25X30, 22 THD, 24MM OD, 9.8, 7114M (P/ST SHLDR BELT GDE BRKT)	98-02		2	11516594
51.		N.S.	RIVET, R/CMPT LID LAT SUPT REINF			4	
52.		N.S.	RIVET, F/TOP STOW COMPT LID HGE STUD PLT			2	
53.		N.S.	RIVET, R/CMPT PNL FRM SUPT			4	
54.		N.S.	RIVET, BODY UPR RR PNL SUPT STUD PLT				
55.	6-A24	12.981	RIVET, R/CMPT PNL (FRM SUPT) (1/4"DIA) (ALUMINIUM)	98-02	Y67	4	10407692
56.	6-A24	12.981	RIVET, R/CMPT PNL (FRM SUPT) (RR CMPT PNL TO SI RL) (1/4"DIA) (ALUMINIUM)	98-02	Y67	4	10407692
57.	6-N8	2.483	STUD, MULTIUSE RLY BRKT (ANC PLT) (M6 X 1 X 24) (1.271)	98-02	Y	2	10135646
58.	6-N12	7.440	BRACKET, VEH LATL ACCLRM	98-02	Y (JL4)	1	10290470
59.	6-B6	13.090	CLIP, BODY FRT WRG HARN	98-02	Y	4	21020632
60.		N.S.	RIVET, PARK BRK RR CBL CLIP STUD PLT				
61.	6-N11	4.785	PLATE, PARK BRK RR CBL CLIP STUD	98-02	Y	2	10404603

cardiagn.com

							1Y12-051
62.	6-N11	4.785	SEAL, PARK BRK RR CBL CLIP STUD PLT (15.222)	98-02	Y	2	10415038
63.	6-N26	15.222	SEAL, CONVENIENCE NET ANC PLT	98-02	YY37-67	4	10415038
64.		N.S.	RIVET, FUEL FEED PIPE CLIP				
65.	6-N11	3.162	PLATE, FUEL FEED PIPE CLIP STUD	98-02	Y	2	10402723
66.	6-N11	3.162	SEAL, FUEL FEED PIPE CLIP STUD PLT (15.222)	98-00	Y	2	10415038
		N.S.	SEALER, FUEL FEED PIPE CLIP STUD PLT	01-02			
67.		N.S.	RIVET, PARK BRK RR CBL CLIP				
68.		N.S.	RIVET, HR W/H LNR BRKT				
69.		N.S.	RIVET, RDO ANT BRKT STUD PLT				
70.	6-A22	12.966	SEAL, BODY UPR RR PNL SUPT ANC PLT (15.222)	98-02	Y	4	10415038
71.	6-N14	9.647	PLATE, RDO PWR ANT BRKT STUD (12.980)	98	Y67 (U75)	1	10264812
	6-N14	9.647	PLATE, RDO ANT BRKT STUD (12.980)	99-02	Y67	1	10264812
72.	6-N14	9.647	SEAL, RDO PWR ANT BRKT STUD PLT (15.222)	98	Y67 (U75)	2	10415038
	6-N14	9.647	SEAL, RDO PWR ANT BRKT STUD PLT (15.222)	99-02	Y37-67	2	10415038

RPO DEFINITIONS
F45 – CHASSIS CONTINUOUS VALVE REAL TIME DAMPING
JL4 – CONTROL ACTIVE BRAKE
U75 – ANTENNA,POWER(CHROME)

cardiagn.com

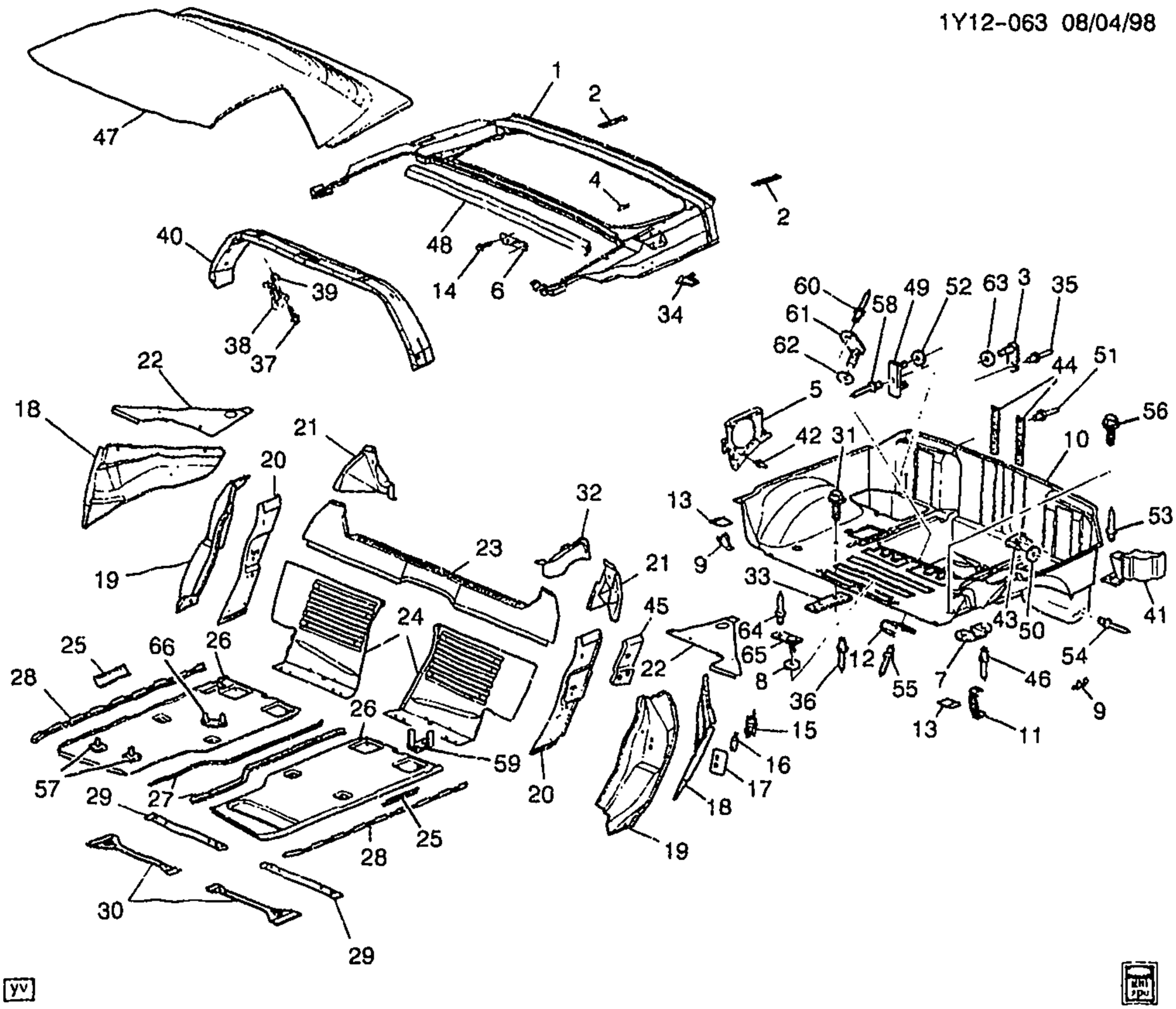

1Y12-063

1999-2001 Y37 SHEET METAL/BODY PART 2 (FLOOR PANEL,BODY L/PLR,ROOF,R/CMPT)

1.	6-A24	12.981	FRAME, R/CMPT PNL	99-01	Y37	1	10269095
2.	6-A10	12.184	PLATE, R/CMPT LID HGE ANC	99-01	Y37	2	10289507
3.	6-N26	15.222	PLATE, CONVENIENCE NET STUD (4.785)	99-01	YY37-67	4	10404603
	6-N26	15.222	PLATE, CONVENIENCE NET STUD (4.785)	99-01	Y37	4	10404603
4.	6-A21	12.945	BRACKET, F/TNK FIL DR LK ACTR	99-01	Y	1	10280943
5.	6-N15	9.665	HOUSING, RDO RR SPKR	99-01	Y37	LH	10272205
	6-N15	9.665	HOUSING, RDO RR SPKR	99-01	Y37	RH	10272206
6.	6-A22	12.966	BRACKET, BODY UPR RR PNL (LWR RR, POSN #2 & #3 LH & RH) (12.940)	99-01	Y37	3	10280465
7.	6-A21	12.944	BRACKET, RR W/H LNR	99-01	Y	6	10281372
8.	6-N11	3.162	SEAL, FUEL FEED PIPE CLIP STUD PLT (15.222)	99-00	Y	2	10415038

cardiagn.com

							1Y12-063
		N.S.	SEAL, FUEL FEED PIPE CLIP STUD PLT	01			
9.	6-N12	5.380	BRACKET, RR SUSP UPR CONT ARM (RR)	99-01	Y	LH	10281367
	6-N12	5.380	BRACKET, RR SUSP UPR CONT ARM (RR)	99-01	Y	RH	10281368
10.	6-A24	12.981	PANEL KIT, R/CMPT FLR	99-01	Y	1	12455603
11.	6-N12	7.450	BRACKET, ELEK SUSP CONT MDL	99-01	Y (F45)	1	10280844
12.	6-N11	4.785	CLIP, PARK BRK RR CBL	99-01	Y	2	10281421
13.	6-N12	5.380	REINFORCEMENT, RR SUSP CONT ARM BRKT	99-01	Y	2	10280564
14.	6-A22	12.966	BOLT, BODY UPR RR PNL BRKT (LWR RR) (M6.3X1.27-25 HEX HD) (7.833)	99-01	Y37	6	10284014
15.		N.S.	RETAINER, FRT S/D LK STKR ANC PLT				
16.		N.S.	PLATE, FRT S/D LK STKR ANC				
17.		N.S.	REINFORCEMENT, FRT S/D LK				
18.	6-A19	12.942	EXTENSION, BODY L/PLR OTR PNL	99	Y	LH	10252545
	6-A19	12.942	EXTENSION, BODY L/PLR OTR PNL	99	Y	RH	10252546
	6-A19	12.942	EXTENSION, BODY L/PLR OTR PNL	00-01	Y	LH	10428922
	6-A19	12.942	EXTENSION, BODY L/PLR OTR PNL	00	Y	RH	10428923
	6-A19	12.942	EXTENSION, BODY L/PLR OTR PNL (CARS BUILT WITH AND AFTER THE LAST EIGHT DIGIT OF VIN 15117747;FOR 2ND DESIGN SEE 10438547)	01	Y (1ST DES)	RH	10428923
	6-A19	12.942	EXTENSION, BODY L/PLR OTR PNL (CARS BUILT PRIOR TO LAST EIGHT DIGIT OF VIN 15117747;FOR 1ST DESIGN SEE 10440111)	01	Y (2ND DES)	RH	10438546
	6-A19	12.942	EXTENSION, BODY L/PLR OTR PNL (#111) (CARS BUILT PRIOR TO LAST EIGHT DIGIT OF VIN 15117747;FOR 1ST DESIGN SEE 10428923)	01	Y (2ND DES)	LH	10438547
19.	6-A19	12.942	PANEL, BODY L/PLR OTR (#54)	99-00	Y	LH	12369436
	6-A19	12.942	PANEL, BODY L/PLR OTR (#54)	99-00	Y	RH	12369437
	6-A19	12.942	PANEL, BODY L/PLR OTR (#54) (CARS BUILT PRIOR TO LAST EIGHT DIGIT OF VIN 15117747;FOR 1ST DESIGN SEE 88951187)	01	Y (2ND DES)	LH	12369436
	6-A19	12.942	PANEL, BODY L/PLR OTR (#54) (CARS BUILT PRIOR TO LAST EIGHT DIGIT OF VIN 15117747;FOR 1ST DESIGN SEE 88951188)	01	Y (2ND DES)	RH	12369437

cardiagn.com

							1Y12-063
	6-A19	12.942	PANEL, BODY L/PLR OTR (#54) (CARS BUILT WITH AND AFTER THE LAST EIGHT DIGIT OF VIN 15117747;FOR 2ND DESIGN SEE 12369436)	01	Y (1ST DES)	LH	88951187
	6-A19	12.942	PANEL, BODY L/PLR OTR (#54) (CARS BUILT WITH AND AFTER THE LAST EIGHT DIGIT OF VIN 15117747;FOR 2ND DESIGN SEE 12369437)	01	Y (1ST DES)	RH	88951188
20.	6-A21	12.944	PANEL, BODY L/PLR INR (#55) (12.942)	99-01	Y07-37	RH	12458932
	6-A21	12.944	PANEL, BODY L/PLR INR (#55) (12.942)	99-01	Y07-37	LH	12458933
21.	6-A19	12.942	EXTENSION, BODY L/PLR UPR TIE BAR (#114, INNER) (CARS BUILT PRIOR TO LAST EIGHT DIGIT OF VIN 15117747;FOR 1ST DESIGN SEE 10252541)	01	Y (2ND DES)	LH	10438474
	6-A19	12.942	EXTENSION, BODY L/PLR UPR TIE BAR (ITEM #114) (INR)	99	Y	LH	10296359
	6-A19	12.942	EXTENSION, BODY L/PLR UPR TIE BAR (ITEM #114) (INR)	00	Y	LH	10252541
	6-A19	12.942	EXTENSION, BODY L/PLR UPR TIE BAR (ITEM #114) (INR) (CARS BUILT WITH AND AFTER THE LAST EIGHT DIGIT OF VIN 15117747;FOR 2ND DESIGN SEE 10438474)	01	Y (1ST DES)	LH	10252541
	6-A19	12.942	EXTENSION, BODY L/PLR UPR TIE BAR (ITEM #114) (OTR)	99-01	Y	LH	10262081
	6-A19	12.942	EXTENSION, BODY L/PLR UPR TIE BAR (#114) (CARS BUILT PRIOR TO LAST EIGHT DIGIT OF VIN 15117747;FOR 1ST DESIGN SEE 10252542)	01	Y (2ND DES)	RH	10438475
	6-A19	12.942	EXTENSION, BODY L/PLR UPR TIE BAR (ITEM #114)	99-00	Y	RH	10252542
	6-A19	12.942	EXTENSION, BODY L/PLR UPR TIE BAR (ITEM #114) (CARS BUILT WITH AND AFTER THF LAST EIGHT DIGIT OF VIN 15117747;FOR 2ND DESIGN SEE 10438475)	01	Y (1ST DES)	RH	10252542
22.	6-A23	12.980	EXTENSION, FLR PNL TUN PNL RR UPR (ITEM #112)	99-01	Y	RH	10252540
	6-A23	12.980	EXTENSION, FLR PNL TUN PNL RR UPR (ITEM #112)	99-01	Y	LH	10438688
23.	6-A19	12.942	BAR, BODY L/PLR UPR TIE (#61)	99-00	Y	1	10412957
	6-A19	12.942	BAR, BODY L/PLR UPR TIE (#61) (CARS BUILT WITH AND AFTER THE LAST EIGHT DIGIT OF VIN 15117747;FOR 2ND DESIGN SEE 10438462)	01	Y (1ST DES)	1	10412957

cardiagn.com

							1Y12-063
	6-A19	12.942	BAR, BODY L/PLR UPR TIE (#61) (CARS BUILT PRIOR TO LAST EIGHT DIGIT OF VIN 15117747;FOR 1ST DESIGN SEE 10412957)	01	Y (2ND DES)	1	10438462
24.	6-N23	11.373	PANEL, F/SEAT BK BODY	99	Y	LH	10290554
	6-N23	11.373	PANEL, F/SEAT BK BODY	99	Y	RH	10290555
	6-N23	11.373	PANEL, F/SEAT BK BODY (W/O REINFORCEMENT) (10.527)	00	Y	RH	10409443
	6-N23	11.373	PANEL, F/SEAT BK BODY (W/O REINFORCEMENT)	00	Y	LH	10409444
	6-N23	11.373	PANEL, F/SEAT BK BODY (W/O REINFORCEMENT) (10.527) (CARS BUILT WITH AND AFTER THE LAST EIGHT DIGIT OF VIN 15117747;FOR 2ND DESIGN SEE 10449456)	01	Y (1ST DES)	RH	10409443
	6-N23	11.373	PANEL, F/SEAT BK BODY (W/O REINFORCEMENT) (CARS BUILT WITH AND AFTER THE LAST EIGHT DIGIT OF VIN 15117747;FOR 2ND DESIGN SEE 10449455)	01	Y (1ST DES)	LH	10409444
	6-N23	11.373	PANEL, F/SEAT BK BODY (CARS BUILT PRIOR TO LAST 8 DIGITS OF VIN 15117747)	01	Y (2ND DES)	LH	10449455
	6-N23	11.373	PANEL, F/SEAT BK BODY (CARS BUILT PRIOR TO LAST 8 DIGITS OF VIN 15117747)	01	Y (2ND DES)	RH	10449456
25.	6-A23	12.980	SUPPORT, FLR PNL (POS #1) (IN BOARD) (#29.2)	99-01	Y	LH	10257727
	6-A23	12.980	SUPPORT, FLR PNL (POS #1) (IN BOARD) (#29.2)	99-01	Y	RH	10257728
	6-A23	12.980	SUPPORT, FLR PNL (UPR OTR) (POSN #29)	99-01	Y	2	10277079
26.		N.S.	PANEL, FLR		.....		
27.	6-A23	12.980	SUPPORT, FLR PNL (POS #1) (IN BOARD) (#29.2)	99-01	Y	LH	10257727
	6-A23	12.980	SUPPORT, FLR PNL (POS #1) (IN BOARD) (#29.2)	99-01	Y	RH	10257728
	6-A23	12.980	SUPPORT, FLR PNL (UPR OTR) (POSN #29)	99-01	Y	2	10277079
28.		N.S.	SUPPORT, FLR PNL		.....		
29.	6-A23	12.980	BAR, FLR PNL #2 CR	99-01	Y	2	10410261
30.	6-A23	12.980	BAR, FLR PNL #1 CR (#30.2) ...	99-01	Y	2	10247225
31.		8.977	BOLT, HWH TAP M4.8X1.59X16 10.5-OD AB PT 6010 PC (CHILD ST TOP STRP BRKT)	99-01	Y37	2	11504640
32.	6-A19	12.942	EXTENSION, BODY L/PLR UPR TIE BAR (OTR) (LH ONLY)	99-01	Y	1	10262081
33.	6-N26	14.870	PLATE, CHILD ST TOP STRP BRKT ANC (12.184)	00-01	Y37	1	10289507
	6-N26	14.870	PLATE, CHILD ST TOP STRP BRKT ANC (12.184)	99	Y37 (AN4) (EXPORT) ..	1	10289507
34.	6-N19	10.485	BRACKET, R/CON DR LK RCVR .	99-01	Y	1	10282800
35.		N.S.	RIVET, CONVENIENCE NET ANC PLT		.....		

cardiagn.com

36.		N.S.	RIVET, CHILD ST TOP STRP BRKT ANC PLT				
37.	6-A16	12.810	BOLT, RF PNL RR BRKT (UPR RR M10" INTO RF BOW) (HEX M10X1.5X28) (16.545)	99-01	Y37	4	15567059
38.	6-A16	12.810	BRACKET, RF PNL RR (UPR RR)	99-01	Y37	LH	10291419
	6-A16	12.810	BRACKET, RF PNL RR (UPR RR)	99-01	Y37	RH	10291420
39.	6-A16	12.810	NUT, RF PNL RR BRKT (UPR RR M10")	99-01	Y37	4	10285255
40.	6-A22	12.952	BOW, RF PNL	99-01	Y37	1	12459092
41.	6-A24	12.981	SUPPORT, R/CMPT PNL FRM	99-01	Y37-67	RH	10408901
	6-A24	12.981	SUPPORT, R/CMPT PNL FRM	99-01	Y37-67	LH	10408902
42.		N.S.	RIVET, RDO RR SPKR HSG			4	
43.	6-A22	12.966	PLATE, BODY UPR RR PNL SUPT ANC (12.380)	99-01	Y	2	10264812
	6-A22	12.966	SEAL, BODY UPR RR PNL SUPT ANC PLT (15.222)	99-01	Y	4	10415038
44.	6-A11	12.237	REINFORCEMENT, R/CMPT LID LAT SUPT	99-01	Y37	2	10279694
45.		N.S.	REINFORCEMENT, BODY L/PLR INR PNL UPR				
46.		N.S.	RIVET, RR W/H LNR BRKT				
47.	6-A16	12.810	PANEL, RF	99-01	Y37	1	10255235
48.	6-A24	12.981	REINFORCEMENT, R/CMPT PNL FRM	99-01	Y37	1	10288225
49.	6-N14	9.647	PLATE, RDO ANT BRKT STUD (12.980)	99-01	Y37	1	10264812
50.	6-A22	12.966	SEAL, BODY UPR RR PNL SUPT ANC PLT (15.222)	99-01	Y	4	10415038
51.		N.S.	RIVET, R/CMPT LID LAT SUPT REINF			4	
52.	6-N14	9.647	SEAL, RDO PWR ANT BRKT STUD PLT (15.222)	99-01	Y37-67	2	10415038
53.		N.S.	RIVET, R/CMPT PNL FRM SUPT			4	
54.		N.S.	RIVET, BODY UPR RR PNL SUPT STUD PLT				
55.		N.S.	RIVET, PARK BRK RR CBL CLIP				
56.		8.977	BOLT, HFH, W/FL WA, TAP, M4.2X1.41X16, 6172M, POR, 12.5MM FL WA, BSSD (RR CMPT PNL TO SI RL)	99-01		6	11513942
57.	6-N8	2.483	STUD, MULTIUSE RLY BRKT (ANC PLT) (M6 X 1 X 24) (1.271)	99-01	Y	2	10135646
58.		N.S.	RIVET, RDO ANT BRKT STUD PLT				
59.	6-B6	13.090	CLIP, BODY FRT WRG HARN	99-01	Y	4	21020632
60.		N.S.	RIVET, PARK BRK RR CBL CLIP STUD PLT				
61.	6-N11	4.785	PLATE, PARK BRK RR CBL CLIP STUD	99-01	Y	2	10404603
62.	6-N11	4.785	SEAL, PARK BRK RR CBL CLIP STUD PLT (15.222)	99-01	Y	2	10415038
63.		N.S.	SEAL, CONVENIENCE NET ANC PLT				
64.		N.S.	RIVET, FUEL FEED PIPE CLIP				
65.	6-N11	3.162	PLATE, FUEL FEED PIPE CLIP STUD	99-01	Y	2	10402723
66.	6-N12	7.440	BRACKET, VEH LATL ACCLRM	99-01	Y (JL4)	1	10290470

cardiagn.com

RPO DEFINITIONS
AN4 – RESTRAINT PROVISIONS,CHILD(CANADIAN)
F45 – CHASSIS CONTINUOUS VALVE REAL TIME DAMPING
JL4 – CONTROL ACTIVE BRAKE

cardiagn.com

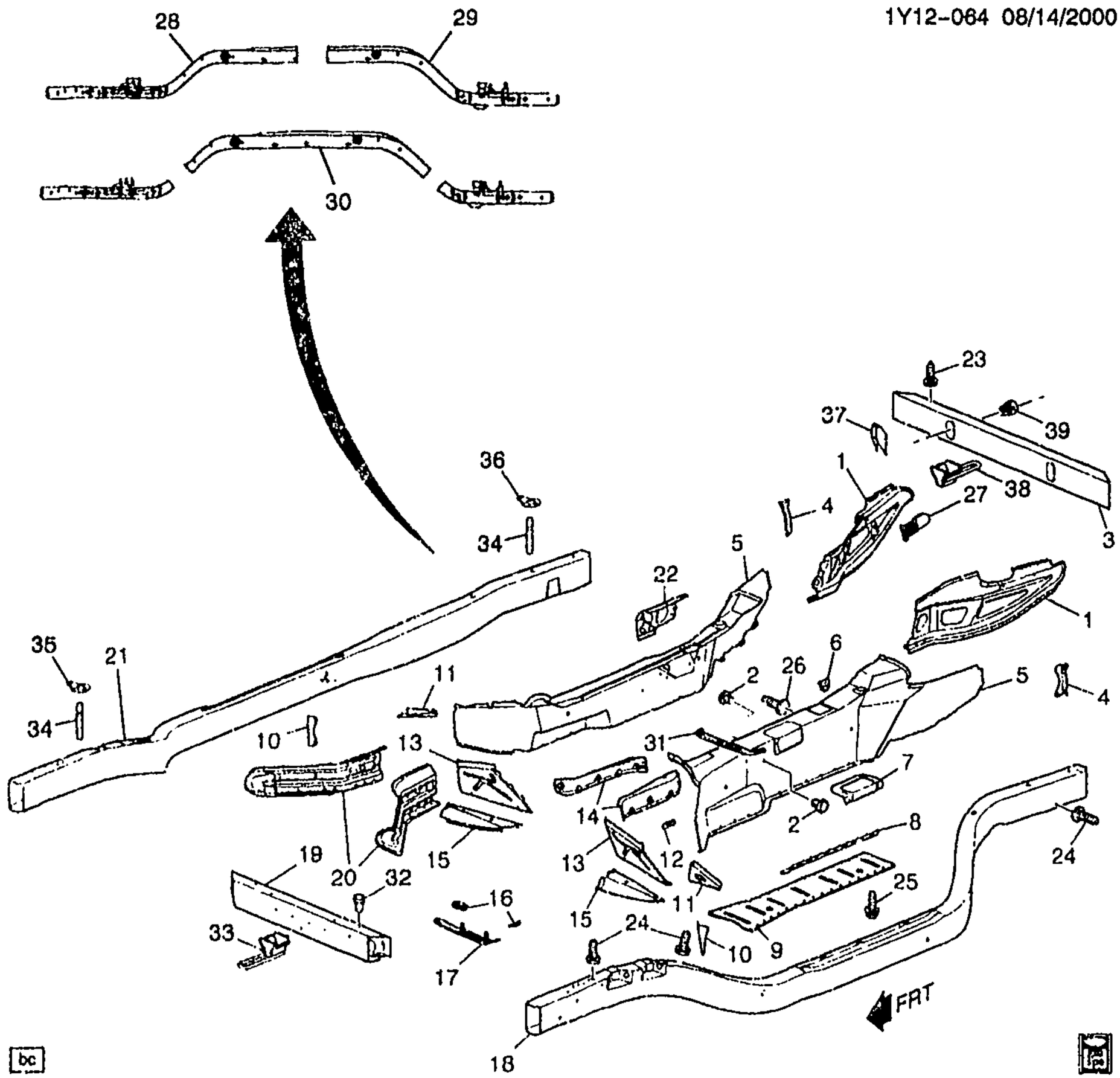

1Y12-064

1999-2002 Y SHEET METAL/BODY PART 3 (BUMPER BARS,TUNNEL,RAILS)

1.	6-A23	12.980	BRACE, FLR PNL TUN RR	99-01	Y	LH	10293681
	6-A23	12.980	BRACE, FLR PNL TUN RR	99-01	Y	RH	10293682
	6-A23	12.980	BRACE, FLR PNL TUN RR (#36) .	02	Y	LH	10438455
	6-A23	12.980	BRACE, FLR PNL TUN RR (#36) .	02	Y	RH	10438456
2.	6-N19	10.230	NUT, I/P CTR SUPT BRKT (AT I/P CTR BRKT) (4.665)	99-02	Y	2	10281487
3.	6-N13	7.831	BAR, RR BPR IMP	99-02	Y	1	12533362
4.	6-A23	12.980	BRACKET, FLR PNL TUN PNL SI RR	99-02	Y	LH	10284287
	6-A23	12.980	BRACKET, FLR PNL TUN PNL SI RR	99-02	Y	RH	10284288
5.		N.S.	PANEL, FLR PNL TUN PNL SI ...		.....		

cardiagn.com

							1Y12-064
6.	6-N11	4.047	BRACKET, A/TRNS RANGE SEL LVR CBL (TO FRONT)	99-02	Y	1	10277347
7.		N.S.	REINFORCEMENT, TRANS CONT LVR BOOT				
8.	6-A23	12.980	BRACKET, FLR PNL TUN REINF	99-01	Y	LH	10250149
	6-A23	12.980	BRACKET, FLR PNL TUN REINF	99-01	Y	RH	10250150
	6-A23	12.980	BRACKET, FLR PNL TUN REINF (#32)	02	Y	LH	10449844
	6-A23	12.980	BRACKET, FLR PNL TUN REINF (#32)	02	Y	RH	10449845
9.		N.S.	REINFORCEMENT, FLR PNL TUN PNL				
10.	6-A23	12.980	BRACKET, FLR PNL TUN PNL SI FRT	99-02	Y	LH	10284285
	6-A23	12.980	BRACKET, FLR PNL TUN PNL SI FRT	99-02	Y	RH	10284286
11.	6-A23	12.980	EXTENSION, FLR PNL TUN PNL FRT UPR	99-02	Y	LH	10250158
	6-A23	12.980	EXTENSION, FLR PNL TUN PNL FRT UPR	99-02	Y	RH	10250159
12.		N.S.	BRACKET, CTLTC CONV H/SHLD				
13.	6-A22	12.975	REINFORCEMENT, FLR K/UP PNL	99-02	Y	LH	10299652
	6-A22	12.975	REINFORCEMENT, FLR K/UP PNL	99-02	Y	RH	10299653
14.	6-N11	3.690	SHIELD, CTLTC CONV HT	99-02	Y	LH	10259597
	6-N11	3.690	SHIELD, CTLTC CONV HT	99-02	Y	RH	10259598
15.	6-A23	12.980	EXTENSION, FLR PNL CTR TUN PNL FRT LWR (#41, INTERMEDIATE)	99-02	Y	LH	10425850
16.		N.S.	SPACER, I/P TIE LWR				
17.		N.S.	BRACKET, I/P LWR TIE BAR ("TO TUNNEL ATTACH")				
18.		N.S.	RAIL, U/B SI			LH	
19.	6-N13	7.831	BAR, FRT BPR IMP	99-02	Y	1	12533361
20.	6-A23	12.980	BRACE, FLR PNL TUN FRT	99-01	Y	RH	10293680
	6-A23	12.980	BRACE, FLR PNL TUN FRT	99-01	Y	LH	10444631
	6-A23	12.980	BRACE, FLR PNL TUN FRT (#35)	02	Y	RH	10438452
	6-A23	12.980	BRACE, FLR PNL TUN FRT (#35)	02	Y	LH	10438453
21.		N.S.	RAIL, U/B SI			RH	
22.		N.S.	BRACKET, PARK BRK LVR				
23.	6-N14	9.647	STUD, RDO ANT (ANTENNA GROUND) (2.559)	99-02	Y67	1	10278878
	6-N14	9.647	STUD, RDO ANT (ANTENNA GROUND) (2.559)	99-02	Y37	1	10278878
24.		N.S.	STUD, WRG HARN GND				
25.		8.900	BOLT, W/WA (M6X1X25) (FLR PNL TUN REINF)	99-02	Y	3	11514139
26.	6-N11	3.162	STUD, FUEL FEED & RTN PIPE CLIP	99-02	Y	3	10267731
27.	6-N10	3.130	BRACKET, EVAP EMIS CNSTR PURGE SOL VLV	99-02	Y (LS1)	1	12560884
	6-N10	3.130	BRACKET, EVAP EMIS CNSTR PURGE SOL VLV	99-02	Y	1	10277833
	6-N10	3.130	BRACKET, EVAP EMIS CNSTR PURGE SOL VLV	01-02	Y (LS6)	1	12560884

cardiagn.com

							1Y12-064
28.	6-A23	12.980	RAIL, U/B FRT SI (INCLUDES NUT 10281493)	99-02	Y	LH	12533430
	6-A23	12.980	RAIL, U/B FRT SI (INCLUDES NUT 10281493)	99-02	Y	RH	12533431
29.	6-A23	12.980	RAIL, U/B RR SI	99-02	Y	LH	12533432
	6-A23	12.980	RAIL, U/B RR SI	99-02	Y	RH	12533433
30.	6-A23	12.980	RAIL, U/B SI (CTR)	99-02	Y	LH	12533434
	6-A23	12.980	RAIL, U/B SI (CTR)	99-02	Y	RH	12533435
31.		N.S.	BRACKET, I/P LWR TIE BAR (TO TUNNEL ATTACH)				
32.	6-N13	7.831	NUT, FRT BPR FASCIA BRKT (BRKT TO BAR) (4.665)	99-02	Y	4	10281487
33.	6-N12	7.068	HOOK, FRT TOW	99-02	Y (V76) (EXPORT)	1	10281051
34.		N.S.	SPACER, U/B S/RL				
35.	6-N12	7.039	LOCATOR, FRT C/MBR	99-02	Y	4	10280876
36.	6-N12	7.039	LOCATOR, RR C/MBR	99-02	Y	4	10280876
37.	6-A25	12.986	BRACE, R/CMPT PNL (127.9X126.3X66.5)	99-02	Y	LH	10263983
	6-A25	12.986	BRACE, R/CMPT PNL (127.9X126.3X73.1)	99-02	Y	RH	10299078
	6-A25	12.986	BRACE, R/CMPT PNL (57.0X70.0X147.0)	99-02	Y	2	10424152
38.	6-N12	7.068	HOOK, RR TOW	99-02	Y (V76) (EXPORT)	1	10281052
39.	6-N14	7.840	NUT, RR BPR ENGY ABS (TO IMPACT BAR) (4.665)	99-02	Y	3	10281487

RPO DEFINITIONS

LS1 – ENGINE GAS, 8 CYL, 5.7L, SFI, ALUMINUM ENGINE
LS6 – ENGINE GAS, 8 CYL, 5.7L, SFI, ALUMINUM, HIGH OUTPUT
V76 – HOOK,FRONT TOW

cardiagn.com

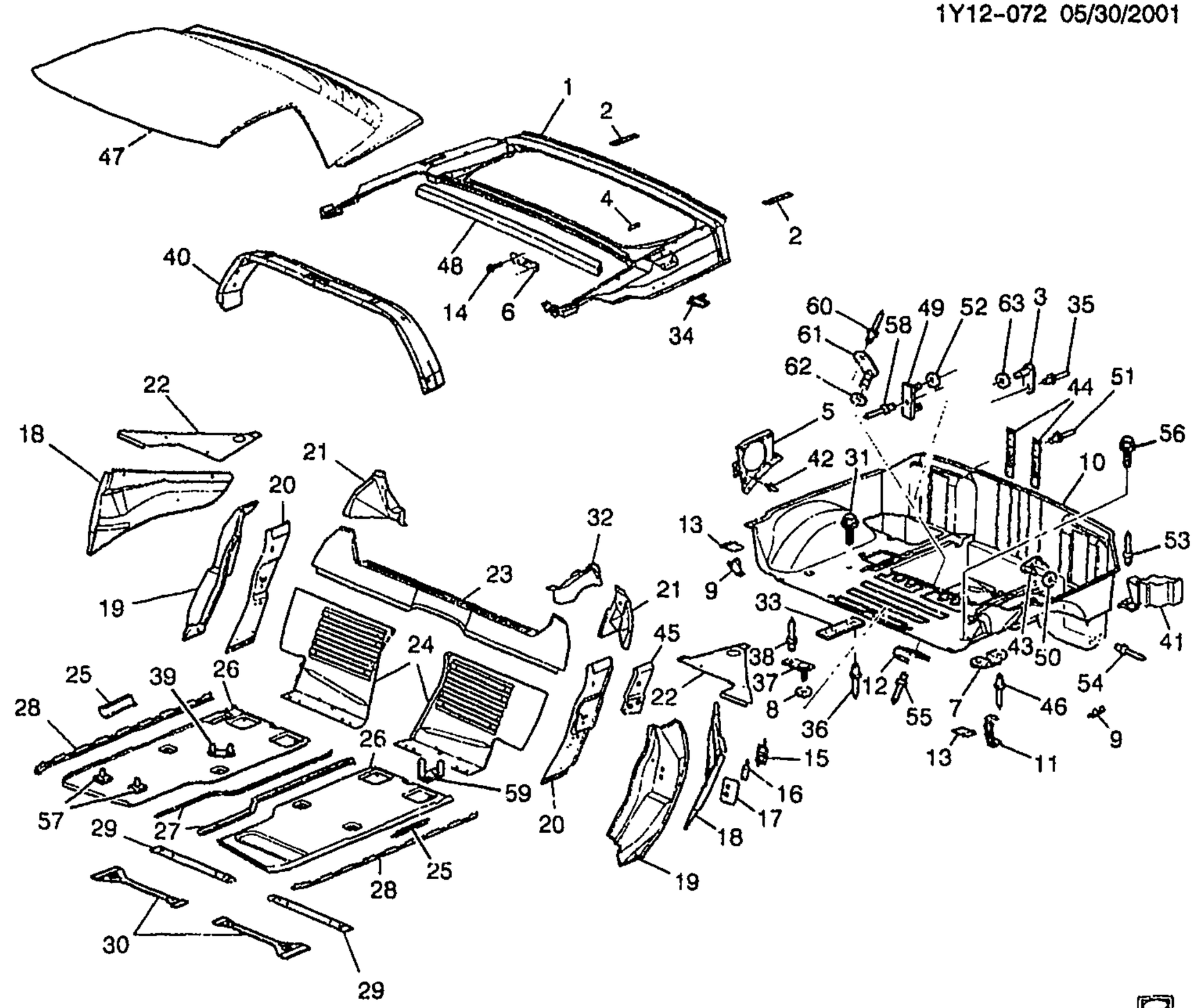

2002 Y37 SHEET METAL/BODY PART 2 (FLOOR PANEL,BODY L/PLR,ROOF,R/CMPT)

1.	6-A24	12.981	FRAME, R/CMPT PNL	02	Y37	1	10269095
2.	6-A10	12.184	PLATE, R/CMPT LID HGE ANC	02	Y37	2	10289567
3.	6-N26	15.222	PLATE, CONVENIENCE NET STUD (4.785)	02	YY37-67	4	10404603
	6-N26	15.222	PLATE, CONVENIENCE NET STUD (4.785)	02	Y37	4	10404603
4.	6-A21	12.945	BRACKET, F/TNK FIL DR LK ACTR	02	Y	1	10280943
5.	6-N15	9.665	HOUSING, RDO RR SPKR	02	Y37	LH	10272205
	6-N15	9.665	HOUSING, RDO RR SPKR	02	Y37	RH	10272206
6.	6-A22	12.966	BRACKET, BODY UPR RR PNL (LWR RR, POSN #2 & #3 LH & RH) (12 940)	02	Y37	3	10280465
7.	6-A21	12.944	BRACKET, RR W/H LNR	02	Y	6	10281372
8.		N.S.	SEAL, FUEL FEED PIPE CLIP STUD PLT				

cardiagn.com

							1Y12-072
9.	6-N12	5.380	BRACKET, RR SUSP UPR CONT ARM (RR)	02	Y	LH	10281367
10.	6-A24	12.981	PANEL KIT, R/CMPT FLR	02	Y	1	12455603
11.	6-N12	7.450	BRACKET, ELEK SUSP CONT MDL	02	Y (F45)	1	10280844
12.	6-N11	4.785	CLIP, PARK BRK RR CBL	02	Y	2	10281421
13.	6-N12	5.380	REINFORCEMENT, RR SUSP CONT ARM BRKT	02	Y	2	10280564
14.	6-A22	12.966	BOLT, BODY UPR RR PNL BRKT (LWR RR) (M6.3X1.27-25 HEX HD) (7.833)	02	Y37	6	10284014
15.		N.S.	RETAINER, FRT S/D LK STKR ANC PLT				
16.		N.S.	PLATE, FRT S/D LK STKR ANC				
17.		N.S.	REINFORCEMENT, FRT S/D LK				
18.	6-A19	12.942	EXTENSION, BODY L/PLR OTR PNL	02	Y	LH	10438546
	6-A19	12.942	EXTENSION, BODY L/PLR OTR PNL (#111)	02	Y	RH	10438547
19.	6-A19	12.942	PANEL, BODY L/PLR OTR (#54)	02	Y	LH	88951187
	6-A19	12.942	PANEL, BODY L/PLR OTR (#54)	02	Y	RH	88951188
20.	6-A21	12.944	PANEL, BODY L/PLR INR (#55) (12.942)	02	Y07-37	RH	12458932
	6-A21	12.944	PANEL, BODY L/PLR INR (#55) (12.942)	02	Y07-37	LH	12458933
21.	6-A19	12.942	EXTENSION, BODY L/PLR UPR TIE BAR (#114, INNER)	02	Y	LH	10438474
	6-A19	12.942	EXTENSION, BODY L/PLR UPR TIE BAR (ITEM #114) (OTR)	02	Y	LH	10262081
	6-A19	12.942	EXTENSION, BODY L/PLR UPR TIE BAR (#114)	02	Y	RH	10438475
22.	6-A23	12.980	EXTENSION, FLR PNL TUN PNL RR UPR (ITEM #112)	02	Y	RH	10252540
	6-A23	12.980	EXTENSION, FLR PNL TUN PNL RR UPR (ITEM #112)	02	Y	LH	10438688
23.	6-A19	12.942	BAR, BODY L/PLR UPR TIE (#61)	02	Y	1	10438462
24.	6-N23	11.373	PANEL, F/SEAT BK BODY	02	Y	LH	10449455
	6-N23	11.373	PANEL, F/SEAT BK BODY	02	Y	RH	10449456
25.	6-A23	12.980	SUPPORT, FLR PNL (UPR OTR) (POSN #29)	02	Y	2	10277079
26.		N.S.	PANEL, FLR				
27.	6-A23	12.980	SUPPORT, FLR PNL (UPR OTR) (POSN #29)	02	Y	2	10277079
28.		N.S.	SUPPORT, FLR PNL				
29.	6-A23	12.980	BAR, FLR PNL #2 CR	02	Y	2	10410261
30.	6-A23	12.980	BAR, FLR PNL #1 CR (#30.2)	02	Y	2	10247225
31.		8.977	BOLT, HWH TAP M4.8X1.59X16 10.5-OD AB PT 6010 PC (CHILD ST TOP STRP BRKT)	02	Y37	2	11504640
32.	6-A19	12.942	EXTENSION, BODY L/PLR UPR TIE BAR (OTR) (LH ONLY)	02	Y	1	10262081
33.	6-N26	14.870	PLATE, CHILD ST TOP STRP BRKT ANC (12.184)	02	Y37	1	10289507
34.	6-N19	10.485	BRACKET, R/CON DR LK RCVR	02	Y	1	10282800
35.		N.S.	RIVET, CONVENIENCE NET ANC PLT				
36.		N.S.	RIVET, CHILD ST TOP STRP BRKT ANC PLT				

cardiagn.com

							1Y12–072
37.	6–N11	3.162	PLATE, FUEL FEED PIPE CLIP STUD	02	Y	2	10402723
38.		N.S.	RIVET, FUEL FEED PIPE CLIP				
39.	6–N12	7.440	BRACKET, VEH LATL ACCLRM	02	Y (JL4)	1	10290470
40.	6–A22	12.852	BOW, RF PNL	02	Y37	1	12459092
41.	6–A24	12.981	SUPPORT, R/CMPT PNL FRM	02	Y37–67	RH	10408901
	6–A24	12.981	SUPPORT, R/CMPT PNL FRM	02	Y37–67	LH	10408902
42.		N.S.	RIVET, RDO RR SPKR HSG			4	
43.	6–A22	12.966	PLATE, BODY UPR RR PNL SUPT ANC (12.980)	02	Y	2	10264812
	6–A22	12.966	SEAL, BODY UPR RR PNL SUPT ANC PLT (15.222)	02	Y	4	10415038
44.	6–A11	12.237	REINFORCEMENT, R/CMPT LID LAT SUPT	02	Y37	2	10279694
45.		N.S.	REINFORCEMENT, BODY L/PLR INR PNL UPR				
46.		N.S.	RIVET, RR W/H LNR BRKT				
47.	6–A16	12.810	PANEL, RF	02	Y37	1	10255235
48.	6–A24	12.981	REINFORCEMENT, R/CMPT PNL FRM	02	Y37	1	10288225
49.	6–N14	9.647	PLATE, RDO ANT BRKT STUD (12.980)	02	Y37	1	10264812
50.	6–A22	12.966	SEAL, BODY UPR RR PNL SUPT ANC PLT (15.222)	02	Y	4	10415038
51.		N.S.	RIVET, R/CMPT LID LAT SUPT REINF			4	
52.	6–N14	9.647	SEAL, RDO PWR ANT BRKT STUD PLT (15.222)	02	Y37–67	2	10415038
53.		N.S.	RIVET, R/CMPT PNL FRM SUPT			4	
54.		N.S.	RIVET, BODY UPR RR PNL SUPT STUD PLT				
55.		N.S.	RIVET, PARK BRK RR CBL CLIP				
56.		8.977	BOLT, HFH, W/FL WA, TAP, M4.2X1.41X16, 6172M, POR, 12.5MM FL WA, BSSD (RR CMPT PNL TO SI RL)	02		6	11513942
57.	6–N8	2.483	STUD, MULTIUSE RLY BRKT (ANC PLT) (M6 X 1 X 24) (1.271)	02	Y	2	10135646
58.		N.S.	RIVET, RDO ANT BRKT STUD PLT				
59.	6–B6	13.090	CLIP, BODY FRT WRG HARN	02	Y	4	21020632
60.		N.S.	RIVET, PARK BRK RR CBL CLIP STUD PLT				
61.	6–N11	4.785	PLATE, PARK BRK RR CBL CLIP STUD	02	Y	2	10404603
62.	6–N11	4.785	SEAL, PARK BRK RR CBL CLIP STUD PLT (15.222)	02	Y	2	10415038
63.		N.S.	SEAL, CONVENIENCE NET ANC PLT				

RPO DEFINITIONS
F45 – CHASSIS CONTINUOUS VALVE REAL TIME DAMPING
JL4 – CONTROL ACTIVE BRAKE

cardiagn.com

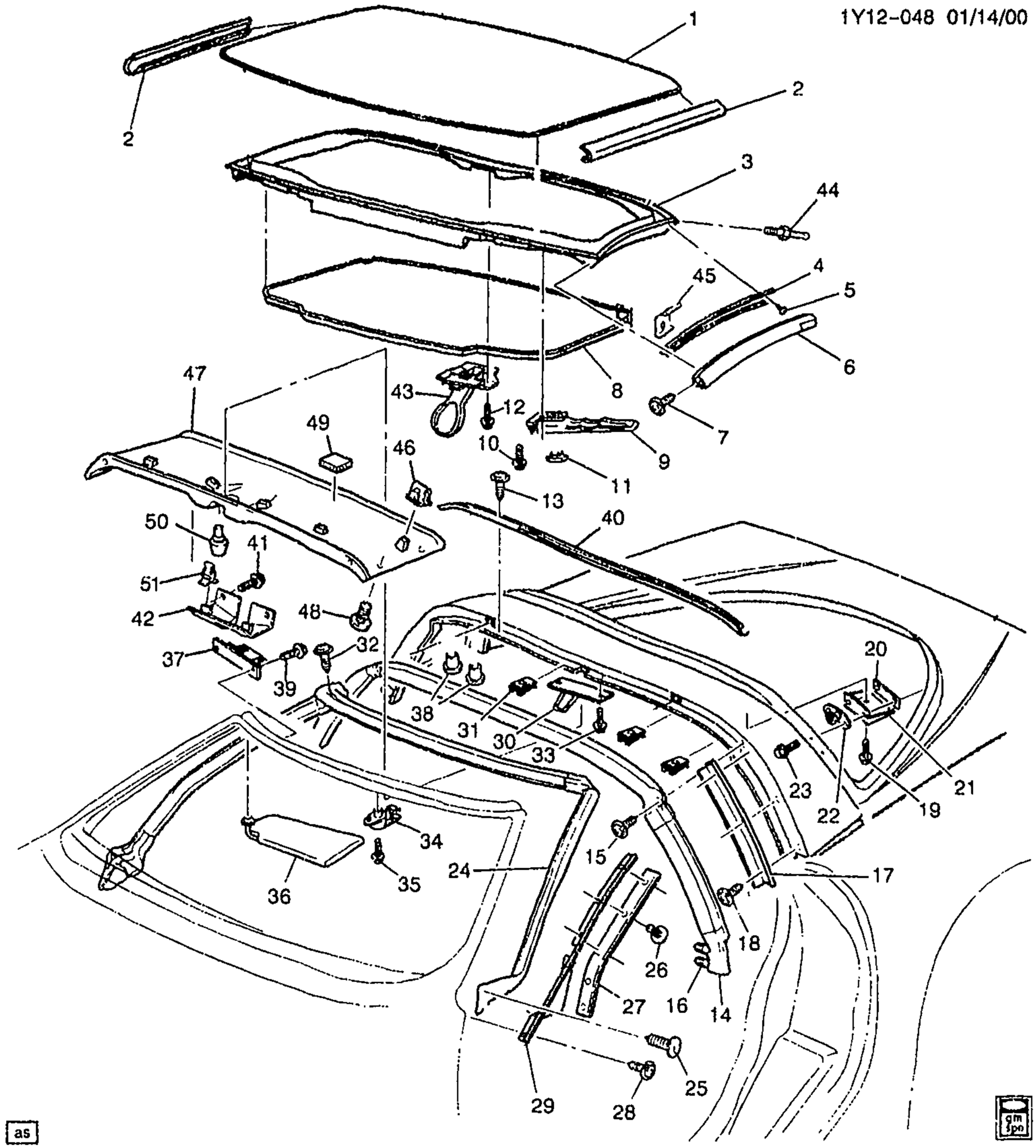

1Y12-048

1997-2002 Y07 ROOF HARDWARE/LIFT OFF PANELS (C2L,CC3,CF7)

1.	6-N8	21.552 A	WINDOW PKG, RF LIFT OFF (INCLS 2) (BLUE) (INSTALL .25) (TRANSPARENT) (12.810)	97-02	Y07 (CC3, C2L)	1	12370935
	6-A16	12.810	PANEL, RF LIFT OFF (PRIMED) (NON-TRANSPARENT)	97-02	Y07 (CF7, C2L)	1	12453435

cardiagn.com

							1Y12-048
2.	6-A16	12.810	MOLDING, RF LIFT OFF PNL/WDO RVL (PART OF 1) (12.075)	97-02	Y07 (CC3, C2L)	LH	10401718
	6-A16	12.810	MOLDING, RF LIFT OFF PNL/WDO RVL (PART OF 1) (12.075)	97-02	Y07 (CC3, C2L)	RH	10401719
	6-A16	12.810	MOLDING, RF LIFT OFF PNL/WDO RVL (PART OF 1)	97-02	Y07 (CF7, C2L)	LH	10438024
	6-A16	12.810	MOLDING, RF LIFT OFF PNL/WDO RVL (PART OF 1)	97-02	Y07 (CF7, C2L)	RH	10438025
3.		N.S.	FRAME, RF LIFT OFF PNL/WDO (PART OF RF LIFT-OFF PNL) ...		.....		
4.	6-N21	10.710	RETAINER, FRT S/D WDO UPR W/STR (RF PNL RET ALUM)	97-02	Y07 (CC3, CF7)	LH	10252849
	6-N21	10.710	RETAINER, FRT S/D WDO UPR W/STR (RF PNL RET ALUM)	97-02	Y07 (C2L)	LH	10252849
	6-N21	10.710	RETAINER, FRT S/D WDO UPR W/STR (RF PNL RET ALUM) (NON ENCAPSULATED)	97-02	Y07 (CC3, CF7)	RH	10252850
	6-N21	10.710	RETAINER, FRT S/D WDO UPR W/STR (RF PNL RET ALUM) (NON ENCAPSULATED)	97-02	Y07 (C2L)	RH	10252850
5.		8.977	BOLT, RD CROWNED WA HD C/R M4.2X1.41X16POR (FRT S/D WDO UPR W/STR RET) (W/C2L) .	97-02	.....	16	11508231
		8.977	BOLT, RD CROWNED WA HD C/R M4.2X1.41X16POR (FRT S/D WDO UPR W/STR RET) (W/CC3, CF7)	97-02	.....	8	11508231
6.	6-N21	10.710	WEATHERSTRIP, FRT S/D WDO UPR	97-00	Y07 (CC3, CF7)	LH	10236315
	6-N21	10.710	WEATHERSTRIP, FRT S/D WDO UPR	97-00	Y07 (C2L)	LH	10236315
	6-N21	10.710	WEATHERSTRIP, FRT S/D WDO UPR	97-00	Y07 (CC3, CF7)	RH	10236316
	6-N21	10.710	WEATHERSTRIP, FRT S/D WDO UPR	97-00	Y07 (C2L)	RH	10236316
	6-N21	10.710	WEATHERSTRIP, FRT S/D WDO UPR	01-02	Y07 (CC3, CF7)	LH	10313370
	6-N21	10.710	WEATHERSTRIP, FRT S/D WDO UPR	01-02	Y07 (C2L)	LH	10313370
	6-N21	10.710	WEATHERSTRIP, FRT S/D WDO UPR	01-02	Y07 (CC3, CF7)	RH	10313371
	6-N21	10.710	WEATHERSTRIP, FRT S/D WDO UPR	01-02	Y07 (C2L)	RH	10313371
7.		8.977	BOLT, RD CROWNED WA HD C/R M4.2X1.41X16POR (FRT S/D WDO UPR W/STR) (W/C2L)	97-02	.....	8	11508231
		8.977	BOLT, RD CROWNED WA HD C/R M4.2X1.41X16POR (FRT S/D WDO UPR W/STR) (W/CC3, CF7)	97-02	.....	4	11508231
8.	6-N25	14.640	PANEL, HDLNG TR	97-02	Y07 (CF7, C2L)	1	10246988
9.	6-A16	12.810	HANDLE, RF LIFT OFF PNL/WDO LAT	97-01	Y07 (CC3, CF7)	LH	10449578
	6-A16	12.810	HANDLE, RF LIFT OFF PNL/WDO LAT	97-02	Y07 (C2L)	LH	10449578
	6-A16	12.810	HANDLE, RF LIFT OFF PNL/WDO LAT	97-01	Y07 (CC3, CF7)	RH	10449579

cardiagn.com

						1Y12–048	
	6–A16	12.810	HANDLE, RF LIFT OFF PNL/WDO LAT	97–02	Y07 (C2L)	RH	10449579
10.	6–A16	12.810	BOLT, RF LIFT OFF PNL/WDO LAT HDL	97–02	Y07 (CC3, CF7)	4	10293378
	6–A16	12.810	BOLT, RF LIFT OFF PNL/WDO LAT HDL	97–02	Y07 (C2L)	8	10293378
11.	6–A18	12.811	COVER, RF LIFT OFF PNL/WDO LAT TR	97–02	Y07 (CC3, CF7)	2	10267173
	6–A18	12.811	COVER, RF LIFT OFF PNL/WDO LAT TR	97–02	Y07 (C2L)	4	10267173
12.		8.900	BOLT/SCREW, HEX W/FL WA 17 OD, M6X1X20, 9.8, 4345M, DOG PT (RF RR PNL LAT)	97–02	Y	2	11515704
13.		8.977	BOLT, RD CROWNED WA HD C/R M4.2X1.41X16POR (RF LIFT OFF PNL/WDO RR W/STR RET)	97–02	Y	4	11508231
14.	6–A16	12.810	WEATHERSTRIP, RF LIFT OFF PNL/WDO RR	97–02	Y07	1	10415918
15.		8.977	BOLT, RD CROWNED WA HD C/R M4.2X1.41X16POR (RF L/OFF PNL/WDO RR W/STR)	97–02	Y	4	11508231
16.	6–A16	12.810	RETAINER, RF LIFT OFF PNL/WDO RR W/STR (PUSH IN) (#83) (BLACK) (4.8 HOLE) (14.685)	97–02	Y07	4	20538173
17.	6–N21	10.710	RETAINER, FRT S/D WDO RR W/STR	97–02	Y07	RH	10299394
	6–N21	10.710	RETAINER, FRT S/D WDO RR W/STR	97–02	Y07	LH	10299393
18.		8.977	BOLT, RD CROWNED WA HD C/R M4.2X1.41X16POR (FRT S/D WDO RR W/STR RET)	97–02	Y	6	11508231
19.	6–A16	12.810	BOLT, RF LIFT OFF PNL/WDO RR LOCR BRKT (HEX M10X1.5X28) (16.545)	97–02	Y07	4	15567059
20.	6–A16	12.810	PLATE, RF LIFT OFF PNL/WDO RR LOCR ANC	97–02	Y07	2	10277360
21.	6–A16	12.810	BRACKET, RF LIFT OFF PNL/WDO RR LOCR	97–02	Y07	LH	10262515
	6–A16	12.810	BRACKET, RF LIFT OFF PNL/WDO RR LOCR	97–02	Y07	RH	10262516
22.	6–A16	12.810	LOCATOR, RF LIFT OFF PNL/WDO RR	97–02	Y07	2	10270313
23.		8.977	SCREW, HEX W/TT CON WA TYPE C M6X1X20 HRD PT PZOR (RF LIFT OFF PNL/WDO RR LOCR)	97–02	Y	6	11508023
24.	6–A15	12.807	WEATHERSTRIP, W/S FRM	97–02	Y07	1	10432623
25.	6–A15	12.807	RETAINER, W/S FRM W/STR (PAINT TO MATCH) (FITS .18 HOLE, .7 LG, .43 OD, NYLON) (14.630)	97–02	Y	4	20540336
26.		8.977	BOLT, RD CROWNED WA HD C/R M4.2X1.41X16POR (FRT S/D WDO FRT W/STR RET)	97–02	Y	10	11508231
27.	6–N21	10.710	RETAINER, FRT S/D WDO FRT W/STR	97–02	Y07	LH	10252847

cardiagn.com

							1Y12-048
	6-N21	10.710	RETAINER, FRT S/D WDO FRT W/STR	97-02	Y07	RH	10252848
28.		8.977	BOLT, RD CROWNED WA HD C/R M4.2X1.41X16POR (W/S SI R/MLDG)	97-02	Y	6	11508231
29.	6-N16	10.093	MOLDING, W/S SI RVL (BLACK)	97	Y07	LH	10299306
	6-N16	10.093	MOLDING, W/S SI RVL (BLACK)	97	Y07	RH	10299307
	6-N16	10.093	MOLDING, W/S SI RVL (BLACK)	98-02	Y07-67	LH	10299306
	6-N16	10.093	MOLDING, W/S SI RVL (BLACK)	98-02	Y07-67	RH	10299307
30.	6-A18	12.811	STRIKER, RF LIFT OFF PNL/WDO RR	97-02	Y07	1	10263234
31.		8.921	NUT, U TYPE, MULTI THD, PREV TORQ, M4.2X1.41TAP, 8.1REACH, 0.65-3.80 PNLS 1065 PZOR (RF LIFT OFF PNL/WDO RR W/STR RET) (AC-DELCO #11513599)	97-02	Y	6	11513599
32.		8.977	BOLT, RD CROWNED WA HD C/R M4.2X1.41X16POR (W/S FRM W/STR)	97-02	Y	7	11508231
33.		8.900	BOLT/SCREW, HEX W/FL WA 17 OD, M6X1X20, 9.8, 4345M, DOG PT (RF LIFT OFF WDO RR STKR)	97-02	Y	2	11515704
34.	6-N19	10.219	RETAINER, S/S	97-02	Y	2	10411051
35.		8.977	SCREW, HIGH-HEX WA HD TAP/B 4.200X 1.41X 30.00 PO (S/S RET) (8.900)	97-02	Y	6	11509541
36.	6-N16	10.203	SUNSHADE, (BLACK)	97	Y07	LH	10426849
	6-N16	10.203	SUNSHADE, (BLACK)	97	Y07	RH	10426850
	6-N16	10.203	SUNSHADE, (BLACK) (W/2.5" EXPOSED RETAINER PIN) (FOR 2ND DES SEE 10426849)	98	Y (EXC Z49) (1ST DES)	LH	10426849
	6-N16	10.203	SUNSHADE, (BLACK) (W/1" EXPOSED RETAINER PIN) (FOR 1ST DES SEE 10407144)	98	Y (EXC Z49) (2ND DES)	LH	10426849
	6-N16	10.203	SUNSHADE, (BLACK) (W/2.5" EXPOSED RETAINER PIN) (FOR 2ND DES SEE 10426850)	98	Y (EXC Z49) (1ST DES)	RH	10426850
	6-N16	10.203	SUNSHADE, (BLACK) (W/1" EXPOSED RETAINER PIN) (FOR 1ST DES SEE 10407145)	98	Y (EXC Z49) (2ND DES)	RH	10426850
	6-N16	10.203	SUNSHADE, (BLACK) (W/2.5" EXPOSED RETAINER PIN) (FOR 2ND DES SEE 10426849)	99	Y07-67 (EXC Z49) (1ST DES)	LH	10426849
	6-N16	10.203	SUNSHADE, (BLACK) (W/1" EXPOSED RETAINER PIN) (FOR 1ST DES SEE 10407144)	99	Y07-67 (EXC Z49) (2ND DES)	LH	10426849
	6-N16	10.203	SUNSHADE, (BLACK)	99	Y07-67 (EXC Z49)	RH	10426850
	6-N16	10.203	SUNSHADE,	00-02	Y07-67 (EXC C88, Z49)	RH	10442033
	6-N16	10.203	SUNSHADE,	00-02	Y07-67 (EXC C88, Z49)	LH	10442034
	6-N16	10.203	SUNSHADE, (1" EXPOSED RETAINER PIN) (BLACK) (EARLY 2000 VEHICLES BUILT W/O MANUAL PSIR SUPPRESSION SWITCH IN GLOVE BOX, FOR 2ND DESIGN SEE 10442035)	00	Y07-67 (Z49) (1ST DES)	LH	10426489

cardiagn.com

							1Y12-048
	6-N16	10.203	SUNSHADE, (1" EXPOSED RETAINER PIN) (BLACK) (EARLY 2000 VEHICLES BUILT W/O MANUAL PSIR SUPPRESSION SWITCH IN GLOVE BOX, FOR 2ND DESIGN SEE 10442035)	00	Y07-67 (Z49) (1ST DES)	RH	10426490
	6-N16	10.203	SUNSHADE, (1" EXPOSED RETAINER PIN) (LATER 2000 VEHICLES W/MANUAL PSIR SUPPRESSION SWITCH IN GLOVEBOX, FOR 1ST DESIGN SEE 10426490)	00	Y07-67 (Z49) (2ND DES)	RH	10442035
	6-N16	10.203	SUNSHADE, (1" EXPOSED RETAINER PIN) (LATER 2000 VEHICLES W/MANUAL PSIR SUPPRESSION SWITCH IN GLOVEBOX, FOR 1ST DESIGN SEE 10426490)	00	Y07-67 (Z49) (2ND DES)	LH	10442036
	6-N16	10.203	SUNSHADE, (1" EXPOSED RETAINER PIN)	01-02	Y (Z49)	RH	10442035
	6-N16	10.203	SUNSHADE, (1" EXPOSED RETAINER PIN)	01-02	Y (Z49)	LH	10442036
	6-N16	10.203	SUNSHADE, (BLACK)	00-02	Y07-67 (C88) (EXPORT)	LH	10426849
	6-N16	10.203	SUNSHADE, (BLACK)	00-02	Y07-67 (C88) (EXPORT)	RH	10426850
37.	6-A18	12.811	STRIKER, RF LIFT OFF PNL/WDO FRT	97-02	Y07	LH	10263229
	6-A18	12.811	STRIKER, RF LIFT OFF PNL/WDO FRT	97-02	Y07	RH	10263230
38.	6-A16	12.810	NUT, RF LIFT OFF PNL/WDO RR LOCR BRKT (POSN #1) (CENTER OF RF PANEL BOW) (4.665)	97-02	Y07	2	10281487
	6-A16	12.810	NUT, RF LIFT OFF PNL/WDO RR LOCR BRKT (POSN #2) (AT ENDS OF RF PANEL BOW)	97-02	Y07	4	10285255
39.		8.900	BOLT, HEX M6X1.25X25, 9.8, 6138M DOG PT W/CON WA 170D (RF LIFT OFF PNL/WDO FRT STKR)	97-02	.....	4	11516932
40.	6-A16	12.810	RETAINER, RF LIFT OFF PNL/WDO RR W/STR	97-02	Y07	1	10252874
41.		8.977	BOLT, RD CROWNED WA HD C/R M4.2X1.41X16POR (RF LIFT OFF PNL/WDO LAT TR CVR) (W/CC3, CF7)	97-02	Y	2	11508231
		8.977	SCREW, LG RND WA HD W/BLK NYL WA, 4.2X 1.41X13, 11-OD, DRILL PT, 6172, PEOR (RF LIFT OFF PNL/WDO LAT TR CVR) (W/C2L)	97-02	Y	4	10180421
42.	6-A18	12.811	COVER, RF LIFT OFF PNL/WDO LAT TR (RR CTR CVR) (INCLS 51)	97-02	Y07 (CC3, CF7)	1	10275882
	6-A18	12.811	COVER, RF LIFT OFF PNL/WDO LAT TR (RR CTR CVR) (INCLS 51)	97-02	Y07 (C2L)	2	10275882
43.	6-A18	12.811	LATCH, RF LIFT OFF PNL/WDO RR	97-02	Y07 (CC3, CF7)	1	10400239

cardiagn.com

						1Y12–048	
	6–A18	12.811	LATCH, RF LIFT OFF PNL/WDO RR	97–02	Y07 (C2L)	2	10400239
44.	6–A16	12.810	PIN, RF LIFT OFF PNL/WDO RR LOC	97–02	Y07 (CC3, CF7)	2	10263243
	6–A16	12.810	PIN, RF LIFT OFF PNL/WDO RR LOC	97–02	Y07 (C2L)	4	10263243
45.	6–N21	10.703	CLIP, FRT S/D WDO W/STR RET (POSITION ON BACK OF RETAINER)	97–02	Y07 (CC3, CF7)	2	10408012
	6–N21	10.703	CLIP, FRT S/D WDO W/STR RET (RF PNL RET ALUM) (POSITION ON BACK OF RETAINER)	97–02	Y07 (C2L)	4	10408012
46.	6–N25	14.640	CLIP, RF RR INR T/PNL RET (PART OF 47) (13.0MM WIDE) (YELLOW) (U–BASE) (16.575) ...	97–02	Y07	4	15748479
47.	6–N25	14.640	PANEL, HDLNG RR TR (INCLS 46, 49, 50) (BLACK)	97–02	Y07	1	10406506
48.	6–N25	14.640	RETAINER, HDLNG RR T/PNL (BLACK) (4.8 HOLE) (14.685)	97–02	Y07	4	20538173
49.		8.958	TAPE, DUAL LK FSTN (44.5MM X 44.5MM – 5 PER PKG) (PART OF 47) (2.483)	97–02	.....	2	12520053
50.	6–A18	12.811	BUMPER, RF LIFT OFF PNL/WDO RR LAT HDL (PART OF 47)	97–02	Y07	1	10290999
51.	6–A18	12.811	RETAINER, RF LIFT OFF PNL/WDO LAT TR CVR (PART OF 42)	97–02	Y07 (CC3, CF7, C2L) ..	2	10290472

RPO DEFINITIONS

CC3 – ROOF,SUN,REMOVEABLE PANELS(TRANSPARENT PLASTIC)
CF7 – ROOF,SUN,REMOVABLE,NON–TRANSPARENT
C2L – ROOF PACKAGE,DUAL REMOVEABLE
C88 – SWITCH INFL RST I/P MDL MAN SUPPRESSION – – DELETE
Z49 – MANDATORY CANADIAN BASE EQUIPMENT MODIFICATIONS(CANADIAN)

cardiagn.com

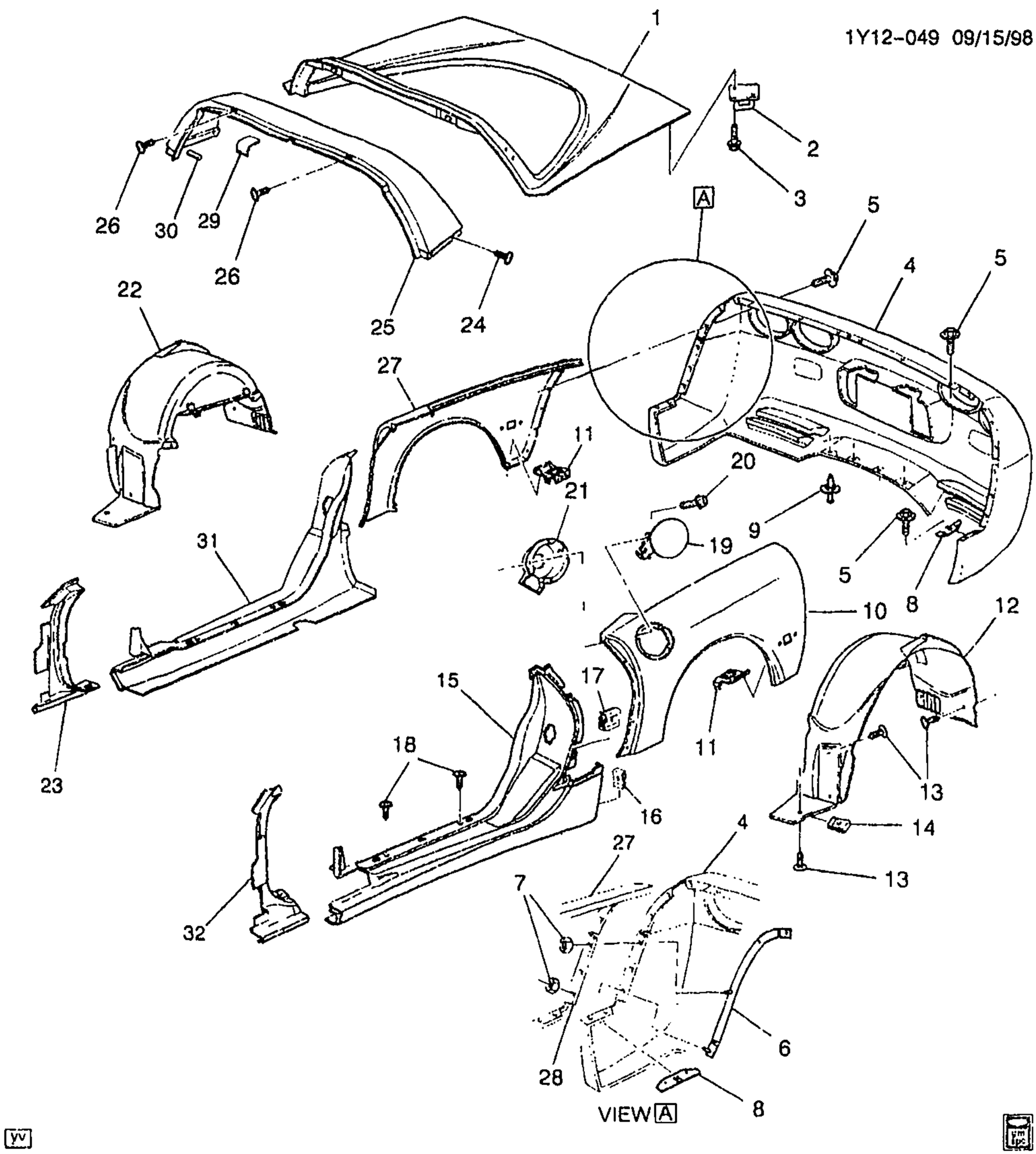

1Y12-049

1997-2002 Y07 BODY/REAR (QUARTER & LIFT WDO)

1.	6-A10	12.181	PANEL, R/CMPT L/WDO	97-02	Y07	1	10400238
2.	6-A11	12.237	STRIKER, R/CMPT L/WDO LAT ..	97-98	Y07	2	10414970
	6-A11	12.237	STRIKER, R/CMPT L/WDO LAT ..	99-02	Y07	2	16637685

2001 GENERAL MOTORS SERVICE PARTS OPERATIONS-CHEVROLET-15Y

cardiagn.com

							1Y12-049
3.		8.906	BOLT/SCREW, M6.0X1.0-20.0 TORX RD WA, GM6138M (R/CMPT L/WDO LK STKR)	97-02		4	11517230
4.	6-N13	7.831	FASCIA, RR BPR (PAINT TO MATCH)	97-02	Y	1	10433081
5.	6-N13	7.831	BOLT, RR BPR FASCIA (TO SEAL RING) (POSN #1) (8.906)	97-02	Y	6	11516965
		8.900	BOLT, W/WA (M6X1X25) (RR BPR FASCIA)	97-02		4	11514139
6.	6-N13	7.831	RETAINER, RR BPR FASCIA OTR (FASCIA TO QTR)	97-02	Y	LH	10257149
	6-N13	7.831	RETAINER, RR BPR FASCIA OTR (FASCIA TO QTR)	97-02	Y	RH	10257150
7.		8.917	NUT, HEX W/CON WA 6X1X5.5 16-OD ZP 9 (R/CMPT PNL BR)	97-02		4	11517293
8.	6-N13	7.831	RETAINER, RR BPR FASCIA LWR (FASCIA OTR TO QTR SI LWR)	97-02	Y	2	10276529
9.	6-N13	7.831	RETAINER, RR BPR FASCIA (PUSH IN) (TO IMPACT BAR) (22.5MM LG) (1.269)	97-02	Y	4	5973400
10.	6-A19	12.940	PANEL, QTR OTR (1" NOTCH AT FRONT EDGE OF FLANGE SURFACE MATING W/HATCH)	97-02	Y07	LH	10418926
11.	6-A25	12.986	BRACE, R/CMPT PNL (127.9X126.3X66.5)	97-02	Y	LH	10263983
	6-A25	12.986	BRACE, R/CMPT PNL (127.9X126.3X73.1)	97-02	Y	RH	10299078
12.	6-A21	12.944	LINER, RR W/H PNL	97-00	Y	LH	10253795
	6-A21	12.944	LINER, RR W/H PNL	01-02	Y07-67	LH	10253795
13.		8.977	SCREW, HEX W/FL WA M4.2X2.25X20 TAP POR (RR W/H PNL LNR)	97-02		16	11508443
14.		8.921	NUT, U TYPE, MULTI THD, PREV TORQ, M4.2X1.41TAP 8.1REACH, 0.65-3.80 PNLS 1065 PZOR (RR W/H PNL LNR) (AC-DELCO #11513599)	97-02		8	11513599
15.	6-N26	14.665	PANEL, FRT S/D OPG FIN (LWR)	97-02		LH	10444701
16.		8.921	NUT, U TYPE, MULTI THD, PREV TORQ, M4.2X1.41TAP 8.1REACH, 0.65-3.80 PNLS 1065 PZOR (FRT S/D OPG FIN PNL) (AC-DELCO #11513599)	97-02		AR	11513599
17.	6-N26	14.665	NUT, FRT S/D OPG FIN PNL (RING TO QTR PNL JOINT) (POSN #1) (12.942)	97-98	Y	6	10277883
		8.919	NUT, (M43.2X1.41) TYP B I/P SND INS (FRT S/D OPG FIN PNL) (RING TO QTR PNL JOINT) (POSN #1)	99-02	Y	6	1629843
18.		8.977	SCREW, LG RD HD TORX TAP M4.2X1.41X20 SS BL OX (FRT S/D OPG FIN PNL)	97-02		4	16751144
19.	6-A21	12.945	DOOR, F/TNK FIL (SMC DR W/STEEL HGE)	97-00	Y	1	10429498
	6-A21	12.945	DOOR, F/TNK FIL (SMC DR W/STEEL HGE)	01-02	Y	1	10443229

cardiagn.com

							1Y12-049
20.		8.977	BOLT-SCREW, M4.2X1.41X13, 5.4 THD, 12.5 OD, GM6172M, GM6138M (F/TNK FIL DR HGE) ..	97-02	.....	2	15714277
21.	6-N10	3.003	HOUSING, F/TNK FIL PIPE (POCKET)	97-02	Y	1	10401497
22.	6-A21	12.944	LINER, RR W/H PNL	00-02	Y07	RH	10411578
	6-A21	12.944	LINER, RR W/H PNL (INJECTION MOLDED) (MUST BE DRILLED FOR 1999 AND PRIOR)	97-99	Y	RH	10411578
23.	6-N26	14.665	PANEL, FRT S/D OPG FIN (UPR) (12.942)	97-02	Y	RH	10418922
24.	6-A16	12.810	BOLT, RF PNL (LWR RF) (M4.2X1.15X20)	97-02	Y07	4	10092102
25.	6-A16	12.810	PANEL, RF	97-02	Y07	1	10289224
26.		8.977	SCREW-ROUNDWASHER M4.2X1.4X13, 8.63OD, 6010M, 6138M, C/R, TAP (RF PNL)	97-02	.....	2	11515893
27.	6-A19	12.940	PANEL, QTR OTR (1" NOTCH AT FRONT EDGE OF FLANGE SURFACE MATING W/HATCH) ...	97-02	Y07	RH	10418927
28.	6-A19	12.940	REINFORCEMENT, QTR OTR UPR PNL (OTR TO FASCIA) (7.831)	97-02	Y	LH	10278282
	6-A19	12.940	REINFORCEMENT, QTR OTR UPR PNL (QTR TO FASCIA)	97-02	Y	RH	10408625
29.	6-A22	12.952	SEALER, RF PNL BOW OTR (POSN #2) (9.665)	97-99	Y07	2	14064578
	6-A22	12.952	SEALER, RF PNL BOW OTR (POSN #2) (9.665)	00-02	Y07	2	14064578
30.		N.S.	SEALER, RF PNL BOW OTR (POSN #1)		.....		
31.	6-N26	14.665	PANEL, FRT S/D OPG FIN (LWR)	97-00	Y	RH	10444702
	6-N26	14.665	PANEL, FRT S/D OPG FIN (LWR)	01-02	Y07, 67	RH	10444702
32.	6-N26	14.665	PANEL, FRT S/D OPG FIN (UPR) (12.942)	97-02	Y	LH	10418921

cardiagn.com

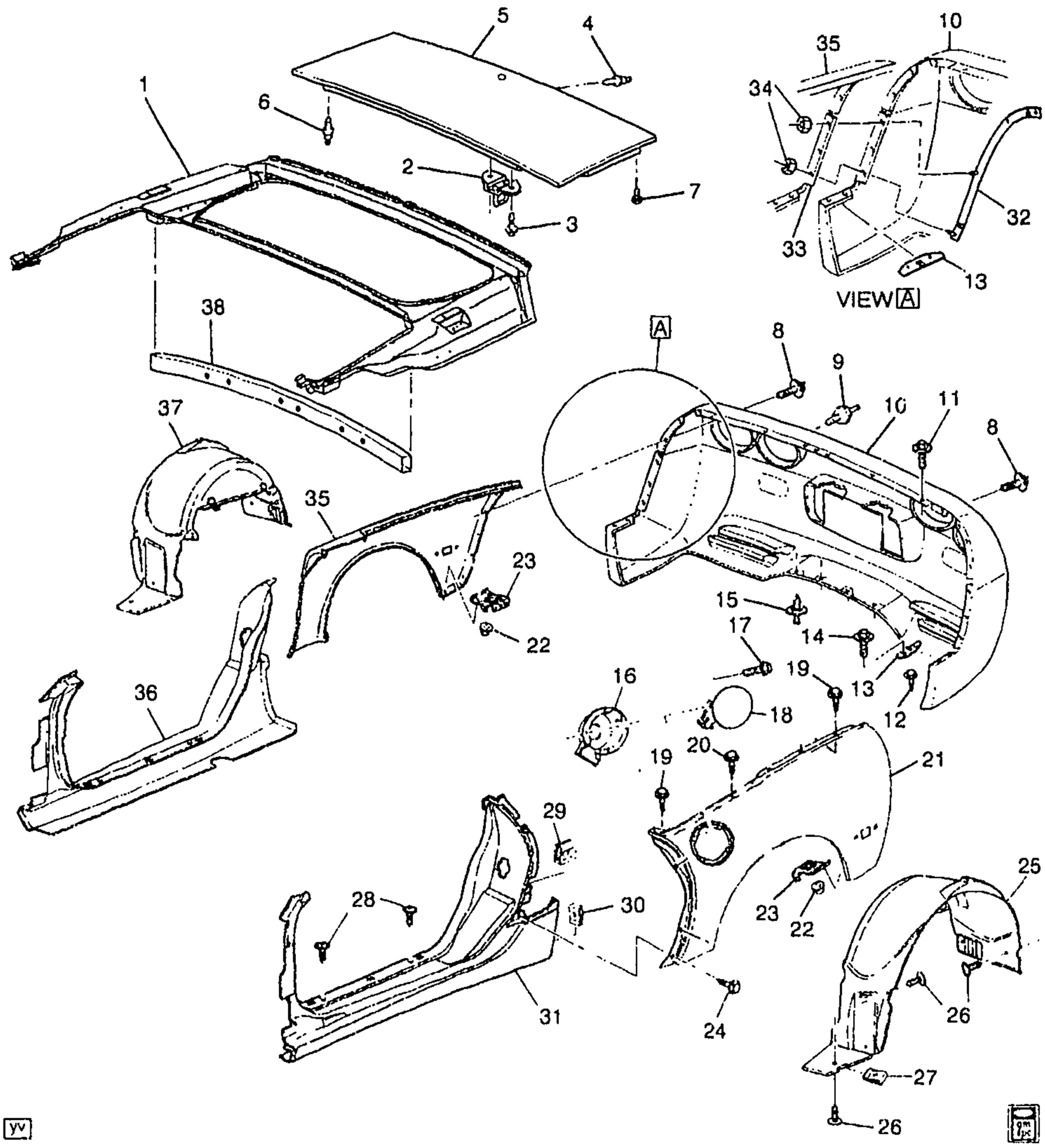

1Y12-055

1998-2002 Y67 BODY/REAR (QUARTER & LID)

1.	6-A24	12.981	FRAME, R/CMPT PNL	98-02	Y67	1	10410425
2.	6-A11	12.237	STRIKER, R/CMPT LID LAT	98-02	Y67	1	10414970
3.		8.900	SCREW, M6X1X30, 11 THD, 12.5 OD, 4.8, 6047M, P-PT (R/CMPT LID LK STKR)	98-02		2	11508128

cardiagn.com

							1Y12-055
4.		8.967	RIVET-3/16X.430, STYLE 1C (R/CMPT LID LK STKR)	98-02		1	9440392
5.	6-A10	12.181	LID, R/CMPT (PRIMERED TO P/N 10421169)	98-02	Y67	1	10421169
6.		8.967	RIVET-3/16X.430, STYLE 1C (R/CMPT LID HGE)	98-02		4	9440392
7.	6-A11	12.212	BUMPER, R/CMPT LID (POSN #1)	98-02	Y67	2	10292972
8.		8.900	BOLT, W/WA (M6X1X25) (RR BPR FASCIA) (POSN #2)	98-02		3	11514139
9.		8.900	BOLT/SCREW, HEX W/FL WA 17 OD, M6X1X20, 9.8, 4345M, DOG PT (RR BPR FASCIA)	98-02		1	11515704
10.	6-N13	7.831	FASCIA, RR BPR (PAINT TO MATCH)	98-02	Y	1	10433081
11.	6-N13	7.831	BOLT, RR BPR FASCIA (TO SEAL RING) (POSN #1) (8.906)	98-02	Y	6	11516965
12.		8.900	BOLT/SCREW, HEX W/FL WA 17 OD, M6X1X20, 9.8, 4345M, DOG PT (RR BPR FASCIA) (PART OF 13)	98-02		2	11515704
13.	6-N13	7.831	RETAINER, RR BPR FASCIA LWR (FASCIA OTR TO QTR SI LWR) (INCLS 12)	98-02	Y	2	10276529
14		8.900	BOLT, W/WA (M6X1X25) (QTR OTR PNL) (TO FASCIA)	98-02		4	11514139
15.	6-N13	7.831	RETAINER, RR BPR FASCIA (PUSH IN) (TO IMPACT BAR) (22.5MM LG) (1.269)	98-02	Y	4	5973400
16.	6-N10	3.003	HOUSING, F/TNK FIL PIPE (POCKET)	98-02	Y	1	10401497
17.		8.977	BOLT-SCREW, M4.2X1.41X13, 5.4 THD, 12.5 OD, GM6172M, GM6138M (F/TNK FIL DR HGE)	98-02		2	15714277
18.	6-A21	12.945	DOOR, F/TNK FIL (SMC DR W/STEEL HGE)	98-00	Y	1	10429498
	6-A21	12.945	DOOR, F/TNK FIL (SMC DR W/STEEL HGE)	01-02	Y	1	10443229
19.	6-A19	12.940	BOLT, QTR OTR PNL (PC3N #3) (QTR TO TONNEAU DECK SURROUND) (8.906)	98-02	Y67	8	11516965
20.		8.977	SCREW, LG RND WA HD W/BLK NYL WA, 4.2X 1.41X13, 11-OD, DRILL PT, 6172, PEOR (QTR OTR PNL) (POSN #4)	98-02		3	10180421
21.	6-A19	12.940	PANEL, QTR OTR	98-02	Y67	LH	10418388
22.		8.917	NUT, HEX W/CON WA 6X1X5.5 16-OD ZP 9 (QTR OTR PNL TO FASCIA) (POSN #2)	98-02		4	11517293
23.	6-A25	12.986	BRACE, R/CMPT PNL (127.9X126.3X66.5)	98-02	Y	LH	10263983
	6-A25	12.986	BRACE, R/CMPT PNL (127.9X126.3X73.1)	98-02	Y	RH	10299078
24.		8.977	SCREW, RD LRG WA HD C/R M4.2X1.41X25PEOR (QTR OTR PNL) (QTR TO S/D OPG FIN PNL) (POSN #2)	98-02		6	11515007
25.	6-A21	12.944	LINER, RR W/H PNL	98-00	Y	LH	10253795

cardiagn.com

							1Y12-055
	6-A21	12.944	LINER, RR W/H PNL	01-02	Y07-67	LH	10253795
26.		8.977	SCREW, HEX W/FL WA M4.2X2.25X20 TAP POR (RR W/H PNL LNR)	98-02		16	11508443
27.		8.921	NUT, U TYPE, MULTI THD, PREV TORQ, M4.2X1.41TAP, 8.1REACH, 0.65-3.80 PNLS 1065 PZOR (W/H RR PNL LNR) (AC-DELCO #11513599)	98-02		8	11513599
28.		8.977	SCREW, LG RD HD TORX TAP M4.2X1.41X20 SS BL OX (FRT S/D OPG LWR FIN PNL)	98-02		4	16751144
29.	6-N26	14.665	NUT, FRT S/D OPG FIN PNL (RING TO QTR PNL JOINT) (POSN #1) (12.942)	98	Y	6	10277883
	6-N26	14.665	NUT, FRT S/D OPG FIN PNL (RING TO QTR PNL JOINT) (PAINT TO MATCH) (8.919)	99-02	Y	6	1629843
30.		8.921	NUT, U TYPE, MULTI THD, PREV TORQ, M4.2X1.41TAP, 8.1REACH, 0.65-3.80 PNLS 1065 PZOR (FRT S/D OPG FIN PNL) (POSN #2) (AC-DELCO #11513599)	98-02		2	11513599
31.	6-N26	14.665	PANEL, FRT S/D OPG FIN (LWR)	98-00	Y	LH	10444701
	6-N26	14.665	PANEL, FRT S/D OPG FIN (LWR)	01-02	Y07-67	LH	10444701
	6-N26	14.665	PANEL, FRT S/D OPG FIN (UPR) (12.942)	98-00	Y	LH	10418921
	6-N26	14.665	PANEL, FRT S/D OPG FIN (UPR) (12.942)	01-02	Y07-67	LH	10418921
32.	6-N13	7.831	RETAINER, RR BPR FASCIA OTR (FASCIA TO QTR)	98-02	Y	LH	10257149
	6-N13	7.831	RETAINER, RR BPR FASCIA OTR (FASCIA TO QTR)	98-02	Y	RH	10257150
33.	6-A19	12.940	REINFORCEMENT, QTR OTR UPR PNL (OTR TO FASCIA) (7.831)	98-02	Y	LH	10278282
	6-A19	12.940	REINFORCEMENT, QTR OTR UPR PNL (QTR TO FASCIA)	98-02	Y	RH	10408625
34.		8.917	NUT, HEX W/CON WA 6X1X5.5 16-OD ZP 9 (R/CMPT PNL BR)	98-02		4	11517293
35.	6-A19	12.940	PANEL, QTR OTR	98-02	Y67	RH	10418389
36.	6-N26	14.665	PANEL, FRT S/D OPG FIN (LWR)	98-00	Y	RH	10444702
	6-N26	14.665	PANEL, FRT S/D OPG FIN (LWR)	01-02	Y07-67	RH	10444702
	6-N26	14.665	PANEL, FRT S/D OPG FIN (UPR) (12.942)	98-00	Y	RH	10418922
	6-N26	14.665	PANEL, FRT S/D OPG FIN (UPR) (12.942)	01-02	Y07-67	RH	10418922
37.	6-A21	12.944	LINER, RR W/H PNL (INJECTION MOLDED) (MUST BE DRILLED FOR 1999 AND PRIOR)	98-99	Y	RH	10411578
	6-A21	12.944	LINER, RR W/H PNL (NEW VAPOR REL SYS)	00	Y37-67	RH	10411578
	6-A21	12.944	LINER, RR W/H PNL (NEW VAPOR REL SYS)	01-02	Y67	RH	10411578
38.	6-A24	12.981	REINFORCEMENT, R/CMPT PNL FRM	98-02	Y67	1	10282732

cardiagn.com

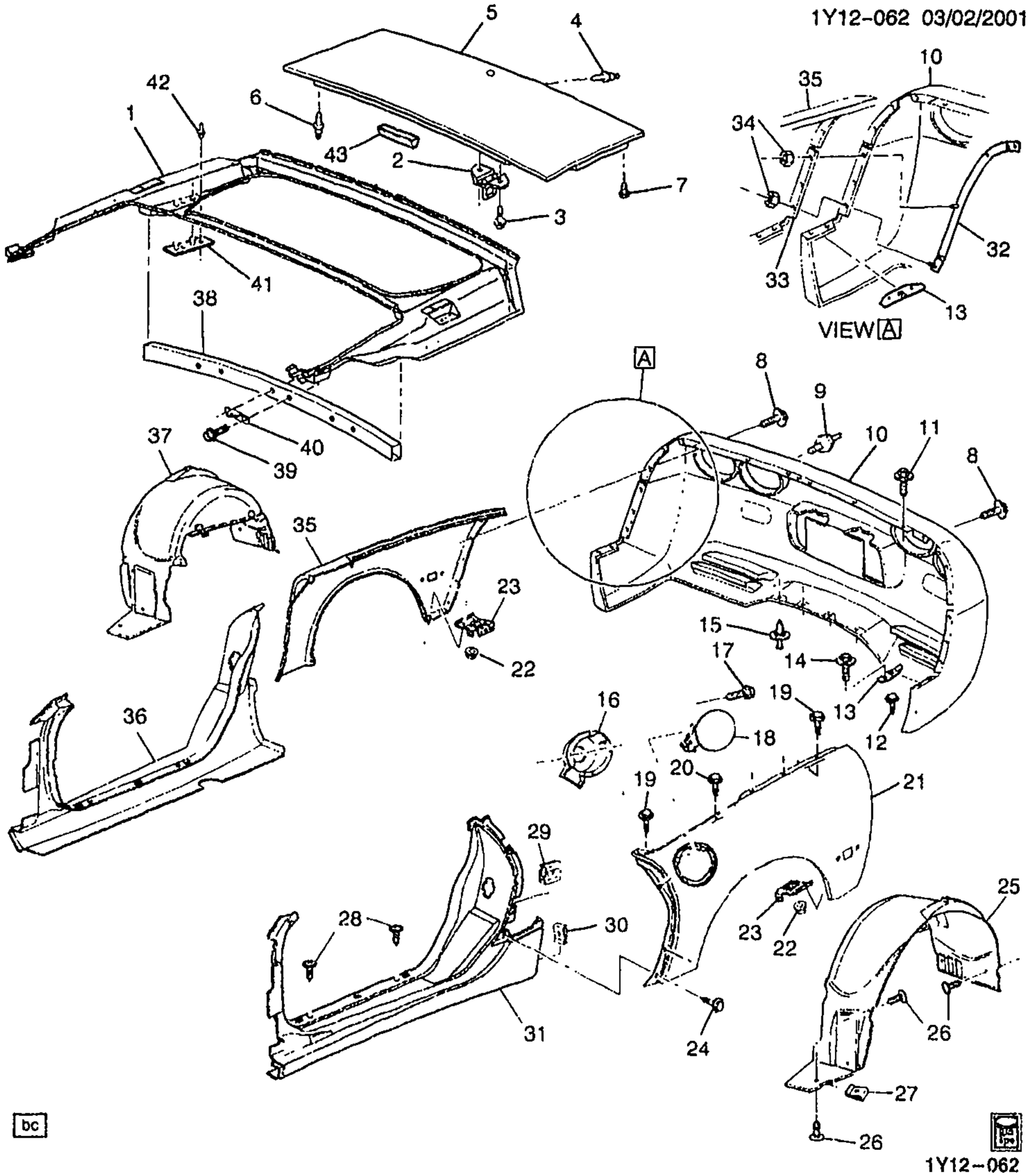

bc

1999-2002 Y37 BODY/REAR (QUARTER & LID)

1.	6-A24	12.981	FRAME, R/CMPT PNL	99-02	Y37	1	10269095
2.	6-A11	12.237	STRIKER, R/CMPT LID LAT	99-02	Y37	1	10414970
3.		8.900	SCREW, M6X1X30, 11 THD, 12.5 OD, 4.8, 6047M, P-PT (R/CMPT LID LK STKR)	99-02	.....	2	11508128
4.		8.967	RIVET-3/16X.430, STYLE 1C (R/CMPT LID LK STKR)	99-02	.....	1	9440392

cardiagn.com

							1Y12-062
5.	6-A10	12.181	LID, R/CMPT (PRIMERED TO P/N 10421169)	99-02	Y37	1	10421169
6.		8.967	RIVET-3/16X.430, STYLE 1C (R/CMPT LID HGE)	99-02		4	9440392
7.	6-A11	12.212	BUMPER, R/CMPT LID	99-02	Y37	2	10292972
8.		8.900	BOLT, W/WA (M6X1X25) (RR BPR FASCIA) (POSN #2)	99-02		3	11514139
9.		8.900	BOLT/SCREW, HEX W/FL WA 17 OD, M6X1X20, 9.8, 4345M, DOG PT (RR BPR FASCIA)	99-02		1	11515704
10.	6-N13	7.831	FASCIA, RR BPR (PAINT TO MATCH)	99-02	Y	1	10433081
11.	6-N13	7.831	BOLT, RR BPR FASCIA (TO SEAL RING) (POSN #1) (8.906)	99-02	Y	6	11516965
12.		8.900	BOLT/SCREW, HEX W/FL WA 17 OD, M6X1X20, 9.8, 4345M, DOG PT (RR BPR FASCIA) (PART OF 13)	99-02		2	11515704
13.	6-N13	7.831	RETAINER, RR BPR FASCIA LWR (FASCIA OTR TO QTR SI LWR) (INCLS 12)	99-02	Y	2	10276529
14.		8.900	BOLT, W/WA (M6X1X25) (QTR OTR PNL) (TO FASCIA)	99-02		4	11514139
15.	6-N13	7.831	RETAINER, RR BPR FASCIA (PUSH IN) (TO IMPACT BAR) (22.5MM LG) (1.269)	99-02	Y	4	5973400
16.	6-N10	3.003	HOUSING, F/TNK FIL PIPE (POCKET)	99-02	Y	1	10401497
17.		8.977	BOLT-SCREW, M4.2X1.41X13, 5.4 THD, 12.5 OD, GM6172M, GM6138M (F/TNK FIL DR HGE)	99-02		2	15714277
18.	6-A21	12.945	DOOR, F/TNK FIL (SMC DR W/STEEL HGE)	99-00	Y	1	10429498
	6-A21	12.945	DOOR, F/TNK FIL (SMC DR W/STEEL HGE)	01-02	Y	1	10443229
19.	6-A19	12.940	BOLT, QTR OTR PNL (POSN #3) (QTR TO TONNEAU DECK SURROUND) (8.906)	99-02	Y37	8	11516965
20.		8.977	SCREW, LG RND WA HD W/BLK NYL WA, 4.2X 1.41X13, 11-OD, DRILL PT, 6172, PEOR (QTR OTR PNL) (POSN #4)	99-02		3	10180421
21.	6-A19	12.940	PANEL, QTR OTR	99-02	Y37	LH	10418388
22.		8.917	NUT, HEX W/CON WA 6X1X5.5 16--OD ZP 9 (QTR OTR PNL TO FASCIA) (POSN #2)	99-02		4	11517293
23.	6-A25	12.986	BRACE, R/CMPT PNL (127.9X126.3X66.5)	99-02	Y	LH	10263983
	6-A25	12.986	BRACE, R/CMPT PNL (127.9X126.3X73.1)	99-02	Y	RH	10299078
24.		8.977	SCREW, RD LRG WA HD C/R M4.2X1.41X25PEOR (QTR OTR PNL) (QTR TO S/D OPG FIN PNL) (POSN #2)	99-02		6	11515007
25.	6-A21	12.944	LINER, RR W/H PNL	99-00	Y	LH	10253795
	6-A21	12.944	LINER, RR W/H PNL	01-02	Y37	LH	10424682

cardiagn.com

							1Y12-062
26.		8.977	SCREW, HEX W/FL WA M4.2X2.25X20 TAP POR (RR W/H PNL LNR)	99-02		16	11508443
27.		8.921	NUT, U TYPE, MULTI THD, PREV TORQ, M4.2X1.41TAP, 8.1REACH, 0.65-3.80 PNLS 1065 PZOR (W/H RR PNL LNR) (AC-DELCO #11513599)	99-02		8	11513599
28.		8.977	SCREW, LG RD HD TORX TAP M4.2X1.41X20 SS BL OX (FRT S/D OPG LWR FIN PNL)	99-02		4	16751144
29.	6-N26	14.665	NUT, FRT S/D OPG FIN PNL (RING TO QTR PNL JOINT) (PAINT TO MATCH) (8.919)	99-02	Y	6	1629843
30.		8.921	NUT, U TYPE, MULTI THD, PREV TORQ, M4.2X1.41TAP, 8.1REACH, 0.65-3.80 PNLS 1065 PZOR (FRT S/D OPG FIN PNL) (POSN #2) (AC-DELCO #11513599)	99-02		2	11513599
31.	6-N26	14.665	PANEL, FRT S/D OPG FIN (LWR)	99-00	Y	LH	10444701
	6-N26	14.665	PANEL, FRT S/D OPG FIN (UPR) (12.942)	99-00	Y	LH	10418921
	6-N26	14.665	PANEL, FRT S/D OPG FIN (LWR)	01-02	Y37	LH	10444708
	6-N26	14.665	PANEL, FRT S/D OPG FIN (UPR)	01-02	Y37	LH	10420532
32.	6-N13	7.831	RETAINER, RR BPR FASCIA OTR (FASCIA TO QTR)	99-02	Y	LH	10257149
	6-N13	7.831	RETAINER, RR BPR FASCIA OTR (FASCIA TO QTR)	99-02	Y	RH	10257150
33.	6-A19	12.940	REINFORCEMENT, QTR OTR UPR PNL. (OTR TO FASCIA) (7.831)	99-02	Y	LH	10278282
	6-A19	12.940	REINFORCEMENT, QTR OTR UPR PNL (QTR TO FASCIA)	99-02	Y	RH	10408625
34.		8.917	NUT, HEX W/CON WA 6X1X5.5 16-OD ZP 9 (R/CMPT PNL BR)	99-02		4	11517293
35.	6-A19	12.940	PANEL, QTR OTR	99-02	Y37	RH	10418389
36.	6-N26	14.665	PANEL, FRT S/D OPG FIN (LWR)	99-00	Y	RH	10444702
	6-N26	14.665	PANEL, FRT S/D OPG FIN (UPR) (12.942)	99-00	Y	RH	10418922
	6-N26	14.665	PANEL, FRT S/D OPG FIN (LWR)	01-02	Y37	RH	10444707
	6-N26	14.665	PANEL, FRT S/D OPG FIN (UPR)	01-02	Y37	RH	10420534
37.	6-A21	12.944	LINER, RR W/H PNL	01-02	Y37	RH	10424681
	6-A21	12.944	LINER, RR W/H PNL (INJECTION MOLDED) (MUST BE DRILLED FOR 1999 AND PRIOR)	99	Y	RH	10411578
	6-A21	12.944	LINER, RR W/H PNL (NEW VAPOR REL SYS)	00	Y37-67	RH	10411578
38.	6-A24	12.981	REINFORCEMENT, R/CMPT PNL FRM	99-02	Y37	1	10288225
39.	6-A22	12.966	BOLT, BODY UPR RR PNL BRKT (LWR RR) (M6.3X1.27-25 HEX HD) (7.833)	99-02	Y37	6	10284014
40.	6-A22	12.966	BRACKET, BODY UPR RR PNL (LWR RR, POSN #2 & #3 LH & RH) (12.940)	99-02	Y37	3	10280465
41.	6-A10	12.184	PLATE, R/CMPT LID HGE ANC	99-02	Y37	2	10289507

cardiagn.com

							1Y12–062
42.		N.S.	RIVET, R/CMPT LID HGE ANC PLT		.....		
43.	6–A11	12.212	BUMPER, R/CMPT LID (CTR)	99–02	Y37	1	10422620

cardiagn.com

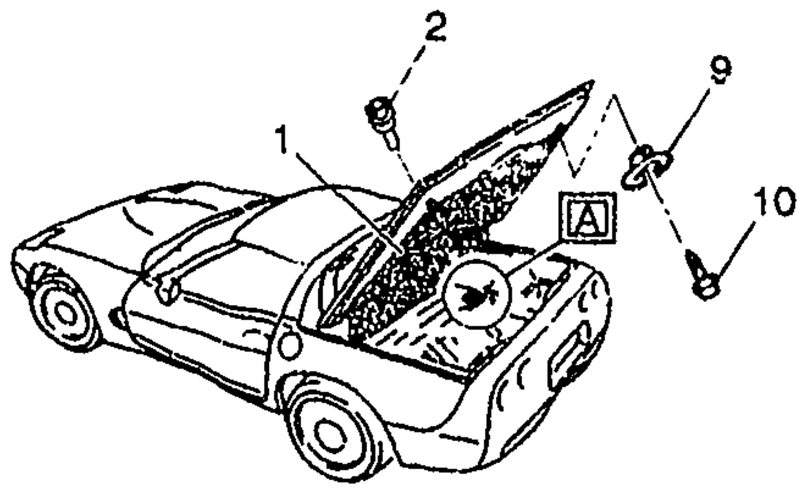

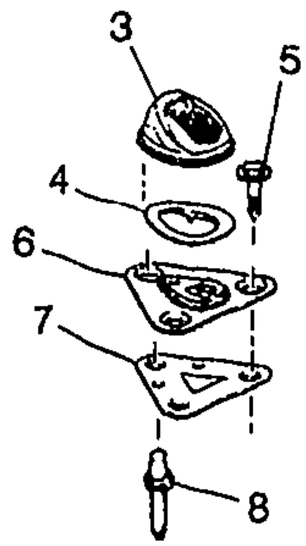

VIEW A

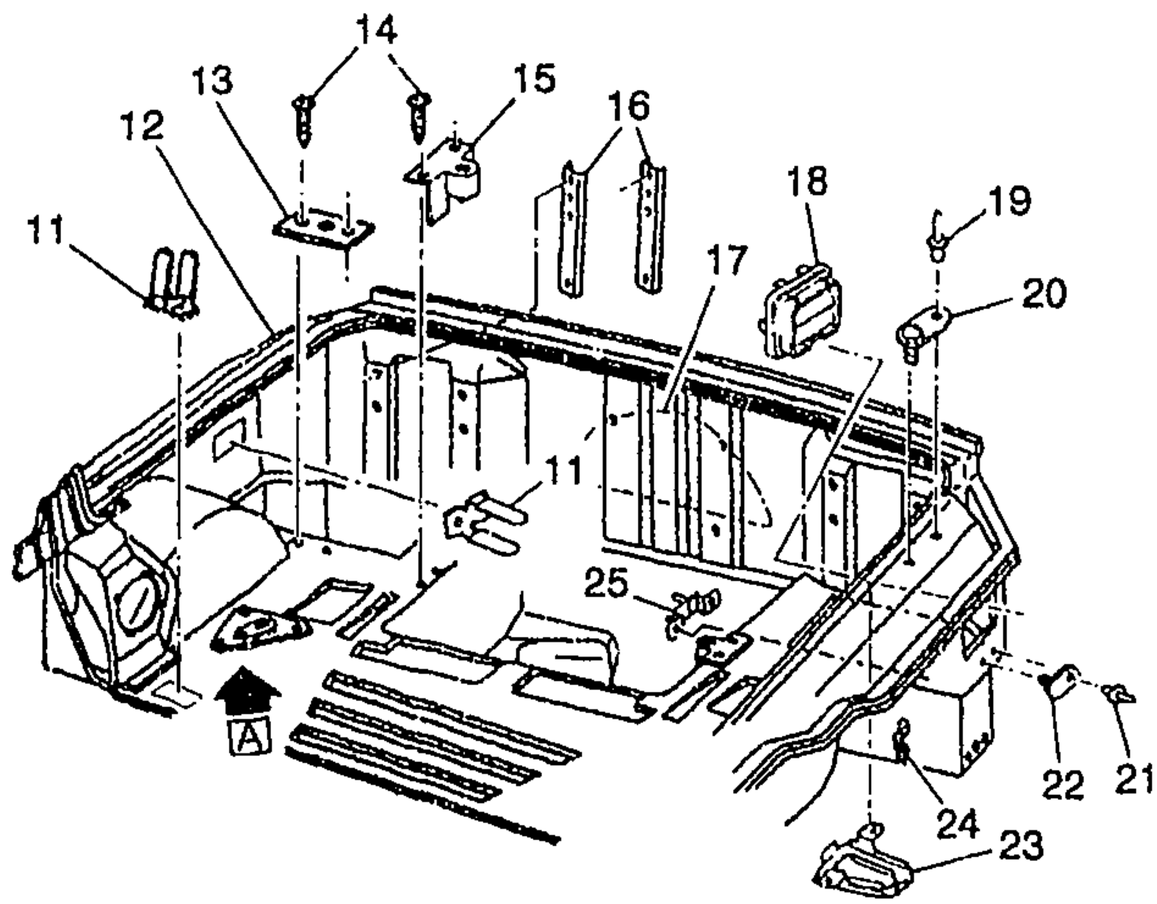

bc

1Y12-052

1997-2002 Y07 COMPARTMENT/REAR STORAGE & HARDWARE

1.	6-N26	15.024	SHADE, LUGG (INCLS 15) (INCLS NET, SHADE, BAG)	97-02	Y07 (D42)	1	10269718
2.	6-N26	15.024	RETAINER, LUGG SHADE (15.222)	97-02	Y07	2	10209685

© 2001 GENERAL MOTORS SERVICE PARTS OPERATIONS-CHEVROLET-15Y

cardiagn.com

							1Y12-052
3.	6-A16	12.810	BRACKET, RF LIFT OFF PNL/WDO STOW FRT (BRACKET INCLUDES NOT SERVICED INSULATOR & COVER) (W/COVER & INSULATOR) (12.815)	97-02	Y07	2	10284474
4.	6-A16	12.810	BEZEL, RF LIFT OFF PNL/WDO STOW FRT BRKT MT	97-02	Y07	2	10284478
5.		8.900	BOLT/SCREW, HFH M6X1X20, 9.8, 7114M, DOG PT, 14.2 OD (RF LIFT OFF PNL/WDO STOW FRT BRKT)	97-02		6	11516398
6.	6-A16	12.810	PLATE, RF LIFT OFF PNL/WDO STOW FRT BRKT STUD (BLACK)	97-02	Y	2	10284475
7.	6-A16	12.810	PLATE, RF LIFT OFF PNL/WDO STOW FRT BRKT STUD	97-02	Y	2	10284890
8.		N.S.	RIVET, RF LIFT OFF PNL/WDO STOW FRT BRKT MT			4	
9.	6-N26	15.024	SUPPORT, LUGG SHADE (RR)	97-02	Y07	2	10271944
10.		8.906	BOLT/SCREW, M6.0X1.0-20.0 TORX RD WA, GM6138M (LUGG SHADE SUPT)	97-02		2	11517230
11.	6-B6	13.090	CLIP, BODY RR WRG HARN	97	Y07	11	21020632
	6-B6	13.090	CLIP, BODY RR WRG HARN	98-02	Y	7	21020632
12.		N.S.	FRAME, R/CMPT PNL				
	6-N11	3.602	BRACKET, EXH MUFF H/SHLD (PART OF R/CMPT PNL)	97-02	Y	6	10296759
13.	6-N26	15.222	STRIKER, R/CMPT PNL STOW PKT CVR LAT (POSN #1)	97-02	Y	2	10401266
14.		8.977	SCREW, LG RND WA HD W/BLK NYL WA, 4.2X 1.41X13, 11-OD, DRILL PT, 6172, PEOR (R/CMPT PNL STOW PKT CVR LAT STRKR)	97-02		6	10180421
15.	6-N26	15.222	STRIKER, R/CMPT PNL STOW PKT CVR LAT (POSN #2)	97-02	Y	2	10290688
16.	6-A12	12.242	REINFORCEMENT, R/CMPT L/WDO LAT BRKT	97-02	Y07	4	10263147
17.	6-A24	12.981	PANEL KIT, R/CMPT FLR	97-02	Y	1	12455603
18.	6-A19	12.940	VALVE, QTR OTR PNL PRESS RLF	97-02	Y	1	10285751
19.		N.S.	RIVET, CONVENIENCE NET UPR STUD PLT			2	
20.	6-N26	15.222	PLATE, CONVENIENCE NET UPR STUD (POSN #2) (4.785)	97-02	Y07	2	10404603
		N.S.	SEALER, CONVENIENCE NET UPR STUD PLT			1	
21.		N.S.	RIVET, CONVENIENCE NET LWR STUD PLT			2	
22.	6-N26	15.222	PLATE, CONVENIENCE NET LWR STUD (4.785)	97-02	Y07	2	10404603
		N.S.	SEALER, CONVENIENCE NET LWR STUD PLT			1	
23.	6-N19	10.485	BRACKET, R/CON DR LK RCVR	97-02	Y	1	10282800
24.	6-A21	12.944	BRACKET, RR W/H LNR	97-02	Y	6	10281372
25.	6-A21	12.945	BRACKET, F/TNK FIL DR LK ACTR	97-02	Y	1	10280943

cardiagn.com

cardiagn.com

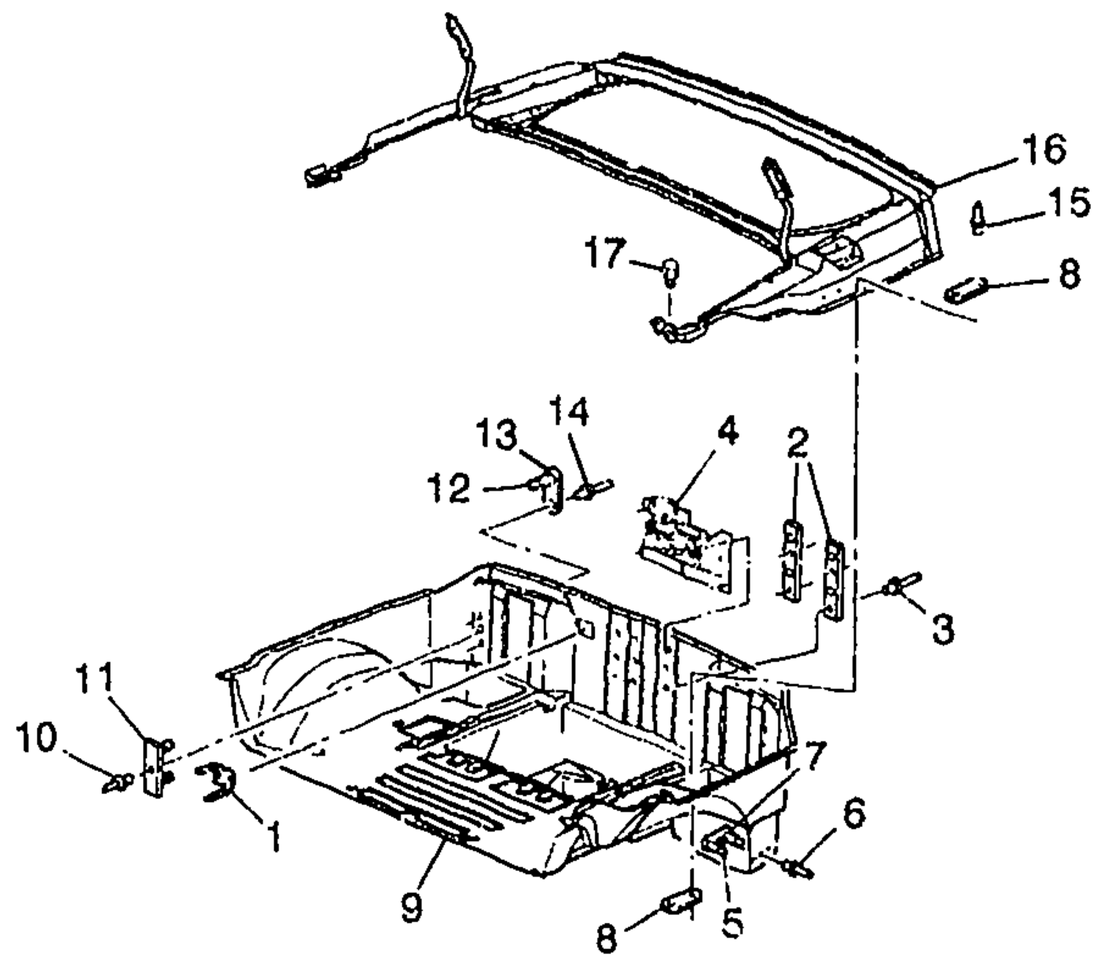

bc

1Y12-050

1998-2002 Y67 COMPARTMENT/REAR STORAGE & HARDWARE

1.	6-B6	13.090	CLIP, BODY RR WRG HARN	98-02	Y	7	21020632
2.	6-A11	12.237	REINFORCEMENT, R/CMPT LID LAT SUPT	98-02	Y67	2	10279694
3.		N.S.	RIVET, R/CMPT LID LAT SUPT REINF		.....		
4.	6-A12	12.242	LATCH, R/CMPT LID (FOR LATCH DETAILS, SEE 1Y12-054) (W/ACTUATOR)	98-00	Y67	1	16637654
	6-A12	12.243	LATCH, R/CMPT LID (FOR LATCH DETAILS, SEE 1Y12-054) (W/ACTUATOR) (12.242)	98-00	Y67	1	16637654
	6-A12	12.243	LATCH, R/CMPT LID (FOR LATCH DETAILS, SEE 1Y12-054) (12.242)	02	YY67	1	10305909
	6-A12	12.243	LATCH, R/CMPT LID (FOR VEHICLES BUILT W EMERGENCY TRUNK RELEASE LATCH SYSTEM; FOR 1ST DES SEE 16637654 W/O EMERGENCY TRUNK RELEASE SYSTEM.) (FOR LATCH DETAILS, SEE 1Y12-054) (12.242)	01	YY67 (2ND DES)	1	10305909

cardiagn.com

							1Y12–050
	6–A12	12.242	LATCH, R/CMPT LID (FOR VEHICLES BUILT W/O EMERGENCY TRUNK RELEASE LATCH SYSTEM; FOR 2ND DES SEE 10305909 W/EMERGENCY TRUNK RELEASE SYSTEM) (FOR LATCH DETAILS, SEE 1Y12–054) (W/ACTUATOR)	01–02	YY67 (1ST DES)	1	16637654
	6–A12	12.243	LATCH, R/CMPT LID (FOR VEHICLES BUILT W/O EMERGENCY TRUNK RELEASE LATCH SYSTEM; FOR 2ND DES SEE 10305909 W/EMERGENCY TRUNK RELEASE SYSTEM) (FOR LATCH DETAILS, SEE 1Y12–054) (W/ACTUATOR) (12.242)	01–02	YY67 (1ST DES)	1	16637654
5.		N.S.	STUD, BODY UPR RR PNL SUPT (PART OF 22)		.....		
6		N.S.	RIVET, BODY UPR RR PNL SUPT STUD PLT		.....		
7.	6–A24	12.981	REINFORCEMENT, R/CMPT PNL FRM (INCLS 20) (12.980)	98–02	Y67	4	10264812
	6–A22	12.966	SEAL, BODY UPR RR PNL SUPT ANC PLT (15.222)	98–02	Y	4	10415038
8.	6–A24	12.981	REINFORCEMENT, R/CMPT PNL FRM (12.980)	98–02	Y67	4	10264812
9.	6–A24	12.981	PANEL KIT, R/CMPT FLR	98–02	Y	1	12455603
	6–N11	3.602	BRACKET, EXH MUFF H/SHLD (PART OF R/CMPT PANEL)	98–02	Y	6	10296759
10.		N.S.	RIVET, RDO PWR ANT BRKT STUD PLT		.....		
11.	6–N14	9.647	PLATE, RDO PWR ANT BRKT STUD (12.980)	98	Y67 (U75)	1	10264812
	6–N14	9.647	PLATE, RDO ANT BRKT STUD (12.980)	99–01	Y67	1	10264812
	6–N14	9.647	SEAL, RDO PWR ANT BRKT STUD PLT (15.222)	98	Y67 (U75)	2	10415038
	6–N14	9.647	SEAL, RDO PWR ANT BRKT STUD PLT (15.222)	99–02	Y37–67	2	10415038
12.		N.S.	STUD, FRT W/H PNL BRKT ANC PLT		.....		
13.	6–N26	15.222	PLATE, CONVENIENCE NET STUD (4.785)	98–02	YY37–67	4	10404603
14.		N.S.	RIVET, CONVENIENCE NET ANC PLT		.....		
15.	6–A24	12.981	RIVET, R/CMPT PNL (FRM SUPT) (1/4"DIA) (ALUMINIUM)	98–02	Y67	4	10407692
16.	6–A24	12.981	FRAME, R/CMPT PNL	98–02	Y67	1	10410425
17.	6–A8	12.170	BUMPER, F/TOP STOW COMPT LID (POSN #1) (12.212)	98–02	Y67	2	10103036

RPO DEFINITIONS
U75 – ANTENNA,POWER(CHROME)

cardiagn.com

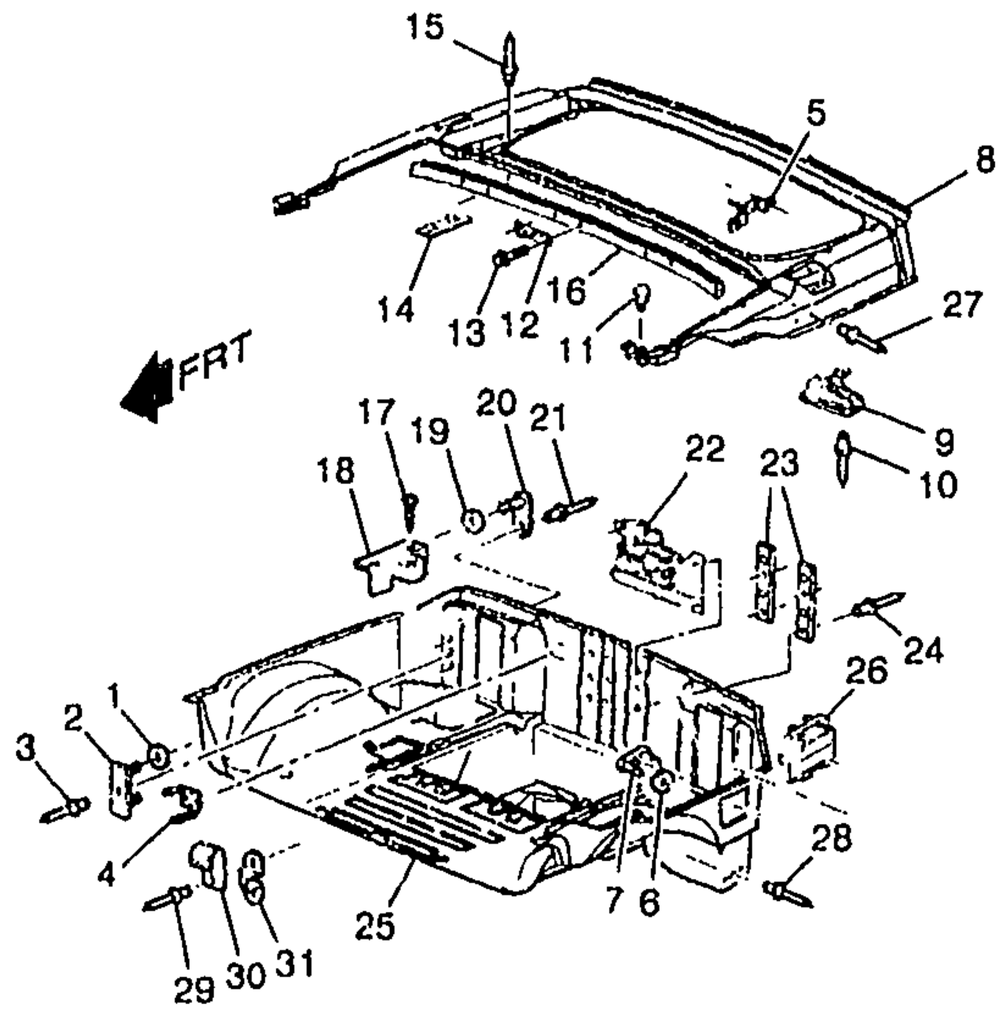

1Y12-061

1999 Y37 COMPARTMENT/REAR STORAGE & HARDWARE

1.	6-N14	9.647	SEAL, RDO PWR ANT BRKT STUD PLT (15.222)	99	Y37-67	2	10415038
2.	6-N14	9.647	PLATE, RDO ANT BRKT STUD (12.980)	99	Y37	1	10264812
3.		N.S.	RIVET, RDO ANT BRKT STUD PLT				
4.	6-B6	13.090	CLIP, BODY RR WRG HARN	99	Y	7	21020632
5.	6-A21	12.945	BRACKET, F/TNK FIL DR LK ACTR	99	Y	1	10280943
6.	6-A22	12.966	SEAL, BODY UPR RR PNL SUPT ANC PLT (15.222)	99	Y	4	10415038
7.	6-A22	12.966	PLATE, BODY UPR RR PNL SUPT ANC (12.980)	99	Y	2	10264812
8.	6-A24	12.981	FRAME, R/CMPT PNL	99	Y37	1	10269095
9.	6-N19	10.485	BRACKET, R/CON DR LK RCVR	99	Y	1	10282800
10.		N.S.	RIVET, R/CON DR LK RCVR BRKT				
11.		8.900	BOLT, HWH, M4.2X1.41X18, 12.5 OD, 6010M, PS (R/CMPT PNL) (8.977)	99		6	15714276
12.	6-A22	12.966	BRACKET, BODY UPR RR PNL (LWR RR, POSN #2 & #3 LH & RH) (12.940)	99	Y37	3	10280465
13.	6-A22	12.966	BOLT, BODY UPR RR PNL BRKT (LWR RR) (M6.3X1.27-25 HEX HD) (7.833)	99	Y37	6	10284014
14.	6-A10	12.184	PLATE, R/CMPT LID HGE ANC	99	Y37	2	10289507

cardiagn.com

							1Y12-061
15.		N.S.	RIVET, R/CMPT LID HGE ANC PLT				
16.	6-A24	12.981	REINFORCEMENT, R/CMPT PNL FRM	99	Y37	1	10288225
17.		8.977	SCREW, LG RND WA HD W/BLK NYL WA, 4.2X 1.41X13, 11-OD, DRILL PT, 6172, PEOR (R/CMPT PNL STOW PKT CVR LAT STKR)	99		4	10180421
18.	6-N26	15.222	STRIKER, R/CMPT PNL STOW PKT CVR LAT (POSN #2)	99	Y	2	10290688
19.		N.S.	SEAL, CONVENIENCE NET ANC PLT				
20.	6-N26	15.222	PLATE, CONVENIENCE NET STUD (4.785)	99	YY37-67	4	10404603
	6-N26	15.222	PLATE, CONVENIENCE NET STUD (4.785)	99	Y37	4	10404603
21.		N.S.	RIVET, CONVENIENCE NET ANC PLT				
22.	6-A12	12.242	LATCH, R/CMPT LID (W/ACTUATOR)	99	Y37	1	16637654
	6-A12	12.243	LATCH, R/CMPT LID (W/ACTUATOR) (12.242)	99	Y37	1	16637654
23.	6-A11	12.237	REINFORCEMENT, R/CMPT LID LAT SUPT	99	Y37	2	10279694
24.		N.S.	RIVET, R/CMPT LID LAT SUPT REINF				
25.	6-A24	12.981	PANEL KIT, R/CMPT FLR	99	Y	1	12455603
	6-N11	3.602	BRACKET, EXH MUFF H/SHLD	99	Y	6	10296759
26.	6-A19	12.940	VALVE, QTR OTR PNL PRESS RLF	99	Y	1	10285751
27.		N.S.	RIVET, F/TNK FIL DR LK ACTR BRKT				
28.		N.S.	RIVET, BODY UPR RR PNL SUPT STUD PLT				
29.		N.S.	RIVET, RR W/H LNR BRKT				
30.	6-N10	3.145	CLIP, EVAP EMIS HOSE (4.785)	99	Y	1	10281421
31.	6-A21	12.944	BRACKET, RR W/H LNR	99	Y	6	10281372

cardiagn.com

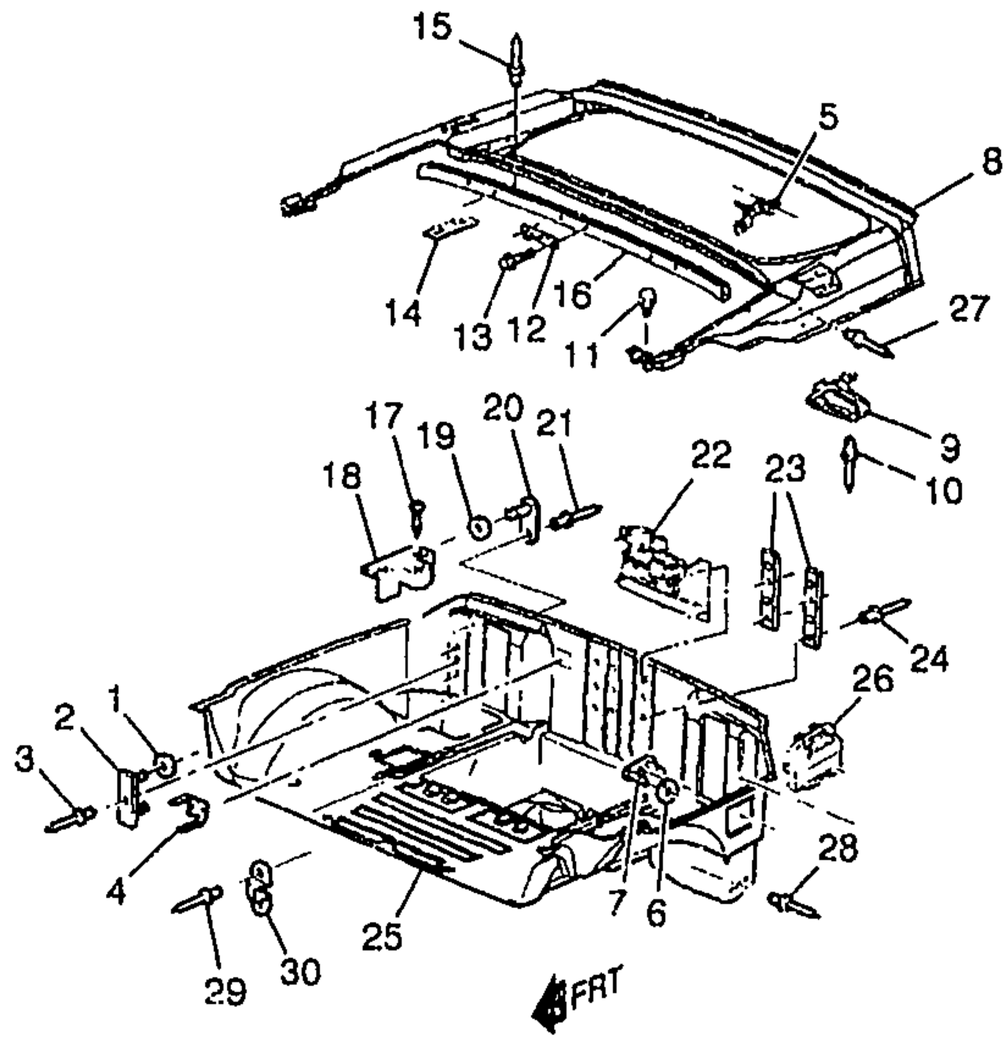

bc

1Y12-066

2000 Y37 COMPARTMENT/REAR STORAGE & HARDWARE

1.	6-N14	9.647	SEAL, RDO PWR ANT BRKT STUD PLT (15.222)	00	Y37-67	2	10415038
2.	6-N14	9.647	PLATE, RDO ANT BRKT STUD (12.980)	00	Y37	1	10264812
3.		N.S.	RIVET, RDO ANT BRKT STUD PLT				
4.	6-B6	13.090	CLIP, BODY RR WRG HARN	00	Y	7	21020632
5.	6-A21	12.945	BRACKET, F/TNK FIL DR LK ACTR	00	Y	1	10280943
6.	6-A22	12.966	SEAL, BODY UPR RR PNL SUPT ANC PLT (15.222)	00	Y	4	10415038
7.	6-A22	12.966	PLATE, BODY UPR RR PNL SUPT ANC (12.980)	00	Y	2	10264812
8.	6-A24	12.981	FRAME, R/CMPT PNL	00	Y37	1	10269095
9.	6-N19	10.485	BRACKET, R/CON DR LK RCVR	00	Y	1	10282800
10.		N.S.	RIVET, R/CON DR LK RCVR BRKT				
11.		8.900	BOLT, HWH, M4.2X1.41X18, 12.5 OD, 6010M, PS (R/CMPT PNL) (8.977)	00		6	15714276
12.	6-A22	12.966	BRACKET, BODY UPR RR PNL (LWR RR, POSN #2 & #3 LH & RH) (12.940)	00	Y37	3	10280465
13.	6-A22	12.966	BOLT, BODY UPR RR PNL BRKT (LWR RR) (M6.3X1.27-25 HEX HD) (7.833)	00	Y37	6	10284014
14.	6-A10	12.184	PLATE, R/CMPT LID HGE ANC	00	Y37	2	10289507

© 2001 GENERAL MOTORS SERVICE PARTS OPERATIONS - CHEVROLET-15Y

cardiagn.com

							1Y12-066
15.		N.S.	RIVET, R/CMPT LID HGE ANC PLT				
16.	6-A24	12.981	REINFORCEMENT, R/CMPT PNL FRM	00	Y37	1	10288225
17.		8.977	SCREW, LG RND WA HD W/BLK NYL WA, 4.2X 1.41X13, 11-OD, DRILL PT, 6172, PEOR (R/CMPT PNL STOW PKT CVR LAT STKR)	00		4	10180421
18.	6-N26	15.222	STRIKER, R/CMPT PNL STOW PKT CVR LAT (POSN #2)	00	Y	2	10290688
19.		N.S.	SEAL, CONVENIENCE NET ANC PLT				
20.	6-N26	15.222	PLATE, CONVENIENCE NET STUD (4.785)	00	YY37-67	4	10404603
	6-N26	15.222	PLATE, CONVENIENCE NET STUD (4.785)	00	Y37	4	10404603
21.		N.S.	RIVET, CONVENIENCE NET ANC PLT				
22.	6-A12	12.242	LATCH, R/CMPT LID (W/ACTUATOR)	00	Y37	1	16637654
	6-A12	12.243	LATCH, R/CMPT LID (W/ACTUATOR) (12.242)	00	Y37	1	16637654
23.	6-A11	12.237	REINFORCEMENT, R/CMPT LID LAT SUPT	00	Y37	2	10279694
24.		N.S.	RIVET, R/CMPT LID LAT SUPT REINF				
25.	6-A24	12.981	PANEL KIT, R/CMPT FLR	00	Y	1	12455603
	6-N11	3.602	BRACKET, EXH MUFF H/SHLD	00	Y	6	10296759
26.	6-A19	12.940	VALVE, QTR OTR PNL PRESS RLF	00	Y	1	10285751
27.		N.S.	RIVET, F/TNK FIL DR LK ACTR BRKT				
28.		N.S.	RIVET, BODY UPR RR PNL SUPT STUD PLT				
29.		N.S.	RIVET, RR W/H LNR BRKT				
30.	6-A21	12.944	BRACKET, RR W/H LNR	00	Y	6	10281372

cardiagn.com

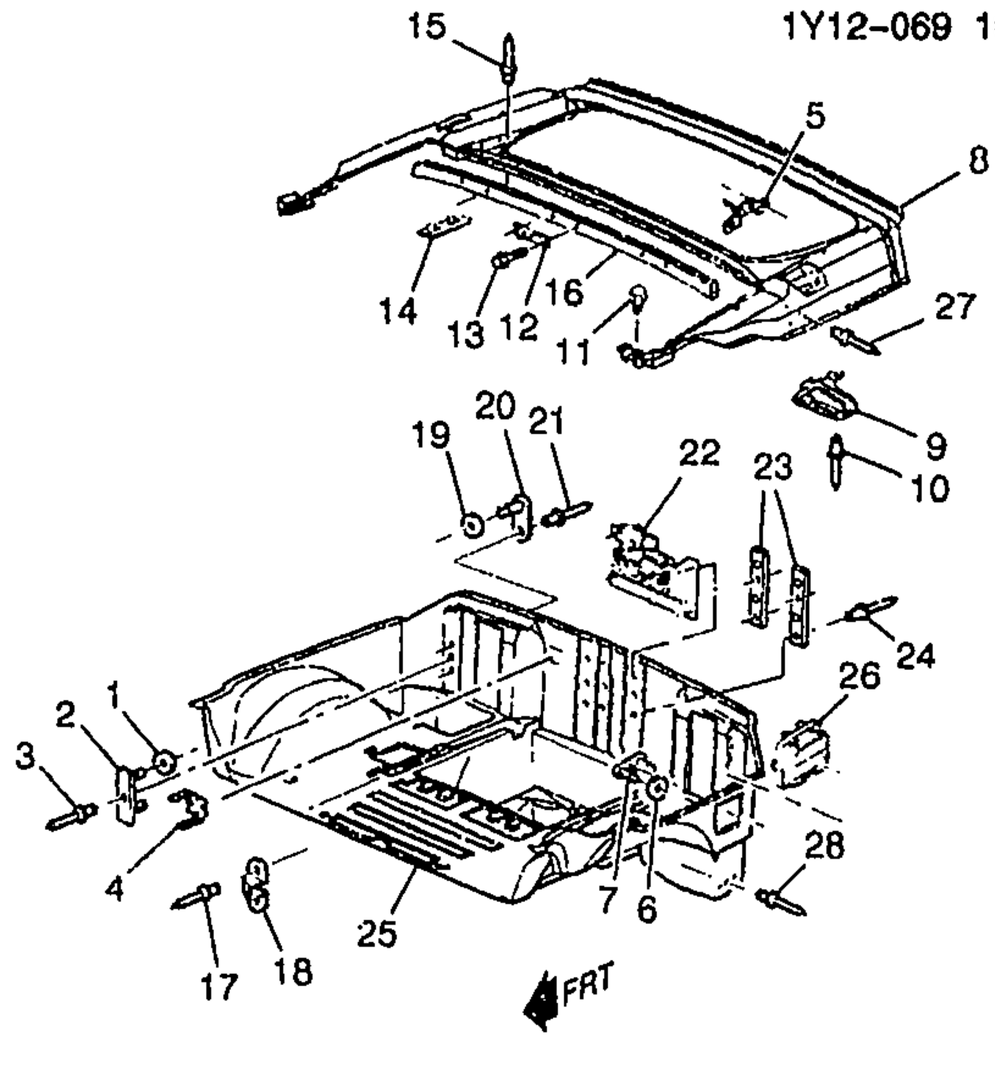

1Y12-069

2001-2002 Y37 COMPARTMENT/REAR STORAGE & HARDWARE

1.	6-N14	9.647	SEAL, RDO PWR ANT BRKT STUD PLT (15.222)	01-02	Y37-67	2	10415038
2.	6-N14	9.647	PLATE, RDO ANT BRKT STUD (12.980)	01-02	Y37	1	10264812
3.		N.S.	RIVET, RDO ANT BRKT STUD PLT				
4.	6-B6	13.090	CLIP, BODY RR WRG HARN	01-02	Y	7	21020632
5.	6-A21	12.945	BRACKET, F/TNK FIL DR LK ACTR	01-02	Y	1	10280943
6.	6-A22	12.966	SEAL, BODY UPR RR PNL SUPT ANC PLT (15.222)	01-02	Y	4	10415038
7.	6-A22	12.966	PLATE, BODY UPR RR PNL SUPT ANC (12.980)	01-02	Y	2	10264812
8.	6-A24	12.981	FRAME, R/CMPT PNL	01-02	Y37	1	10269095
9.	6-N19	10.485	BRACKET, R/CON DR LK RCVR	01-02	Y	1	10282800
10.		N.S.	RIVET, R/CON DR LK RCVR BRKT				
11.		8.900	BOLT, HWH, M4.2X1.41X18, 12.5 OD, 6010M, PS (R/CMPT PNL) (8.977)	01-02		6	15714276
12.	6-A22	12.966	BRACKET, BODY UPR RR PNL (LWR RR, POSN #2 & #3 LH & RH) (12.940)	01-02	Y37	3	10280465
13.	6-A22	12.966	BOLT, BODY UPR RR PNL BRKT (LWR RR) (M6.3X1.27-25 HEX HD) (7.833)	01-02	Y37	6	10284014
14.	6-A10	12.184	PLATE, R/CMPT LID HGE ANC	01-02	Y37	2	10289507
15.		N.S.	RIVET, R/CMPT LID HGE ANC PLT				

cardiagn.com

							1Y12-069
16.	6-A24	12.981	REINFORCEMENT, R/CMPT PNL FRM	01-02	Y37	1	10288225
17.		N.S.	RIVET, RR W/H LNR BRKT				
18.	6-A21	12.944	BRACKET, RR W/H LNR	01-02	Y	6	10281372
19.		N.S.	SEAL, CONVENIENCE NET ANC PLT				
20.	6-N26	15.222	PLATE, CONVENIENCE NET STUD (4.785)	01-02	YY37-67	4	10404603
	6-N26	15.222	PLATE, CONVENIENCE NET STUD (4.785)	01-02	Y37	4	10404603
21.		N.S.	RIVET, CONVENIENCE NET ANC PLT				
22.	6-A12	12.242	LATCH, R/CMPT LID (W/ACTUATOR)	01-02	Y37	1	16637654
	6-A12	12.243	LATCH, R/CMPT LID (W/ACTUATOR) (12.242)	01-02	Y37	1	16637654
23.	6-A11	12.237	REINFORCEMENT, R/CMPT LID LAT SUPT	01-02	Y37	2	10279694
24.		N.S.	RIVET, R/CMPT LID LAT SUPT REINF				
25.	6-A24	12.981	PANEL KIT, R/CMPT FLR	01-02	Y	1	12455603
	6-N11	3.602	BRACKET, EXH MUFF H/SHLD	01-02	Y	6	10296759
26.	6-A19	12.940	VALVE, QTR OTR PNL PRESS RLF	01-02	Y	1	10285751
27.		N.S.	RIVET, F/TNK FIL DR LK ACTR BRKT				
28.		N.S.	RIVET, BODY UPR RR PNL SUPT STUD PLT				

cardiagn.com

12.009 ASHTRAY – RETAINER – SPRING, Instrument Panel Ashtray

97–02	Y	10247681	1	16.70	ASHTRAY, I/P	5–G23,20
97–02	Y	10401217	2	3.45	RETAINER, I/P ASHTRAY (10.242)	5–G23,17
97	Y	17997760	1	3.45	SPRING, I/P ASHTRAY DR	

12.112 DECAL – MOLDING, Front Side Door

98	Y67 INDY PACE CAR (Z4Z)	10405314	2	18.45	DECAL, FRT S/D NA ("OFFICIAL PACE CAR")	6–C10,5
98	Y67 INDY PACE CAR (Z4Z)	10405312	2	48.25	DECAL, FRT S/D UPR (EVENT NAME & DATE)	6–C10,6
97–02	Y BODY SI MLDG (B84)	10427432	RH	85.00	MOLDING, FRT S/D CTR (WHITE) (PAINT TO MATCH)	6–C4,3
97–02	Y BODY SI MLDG (B84)	10427433	LH	85.00	MOLDING, FRT S/D CTR (WHITE) (PAINT TO MATCH)	6–C4,3

12.113 MOLDING, Center Pillar

99–02	Y37	10422994	RH	15.85	MOLDING, BODY L/PLR UPR RVL (12.942)	6–C6,9
99–02	Y37	10422995	LH	15.85	MOLDING, BODY L/PLR UPR RVL (12.942)	6–C6,9

12.116 DECAL – STRIPE, Rear Quarter Panel

98	Y67 INDY PACE CAR (Z4Z)	10405317	2	35.75	DECAL, R/Q (WINGS & WHEELS) (12.112)	6–C10,4
98	Y67 INDY PACE CAR (Z4Z)	10405308	LH	78.00	STRIPE, R/Q UPR	6–C10,3
98	Y67 INDY PACE CAR (Z4Z)	10405309	RH	78.00	STRIPE, R/Q UPR	6–C10,3

12.170 BRACKET – BUMPER – CONNECTOR – EMBLEM – HINGE – INSULATOR – LATCH – LID – NUT – PANEL – PLATE – PLUG – PROTECTOR – SHIM – STRIKER – STRUT – WEATHERSTRIP, Folding Top Compartment

98–02	Y67	10282643	1	10.70	BRACKET, F/TOP STOW COMPT EXTN PNL	7–D8,32
98–02	Y67	10405605	1	6.55	BRACKET, F/TOP STOW COMPT LID BPR	6–C15,19
98–02	Y67	10404536	1	9.70	BRACKET, F/TOP STOW COMPT LID LAT	6–D17,31
98–02	Y67	10103036	2	*.51	BUMPER, F/TOP STOW COMPT LID (POSN #1) (12.212)	6–E27,17
98–02	Y67	10414378	1	3.45	BUMPER, F/TOP STOW COMPT LID (POSN #2)	6–C15,21
98–02	Y67	10278669	2	3.45	BUMPER, F/TOP STOW COMPT LID HGE	6–D17,38
98–02	Y67	12101825	1	18.01	CONNECTOR, SOL–F/TOP LAT REL ACTR (GRAY) (2–WAY F W/LEADS) (INDEX TAB CTR CAVITY A&B) (02.535) (AC–DELCO #PT217)	7–D8,35
01–02	Y	12101888	2	18.01	CONNECTOR, SOL–F/TOP LAT REL ACTR (BLACK) (2–WAY F W/LEADS) (02.535) (AC–DELCO #PT159)	7–D18,35
98–02	Y67	10282774	1	17.55	EMBLEM, F/TOP STOW CMPT EXTN OTR PNL	7–D8,40
98–02	Y67	10418263	LH	41.00	HINGE, F/TOP STOW COMPT LID	7–D8,29
98–02	Y67	10418266	RH	41.00	HINGE, F/TOP STOW COMPT LID	7–D8,29
98–02	YY67	10308440	2	3.45	INSULATOR, F/TOP STOW FRT	7–D8,3
98–99	YY67	10404291	1	3.45	INSULATOR, F/TOP STOW FRT (POS #2)	7–D8,4

cardiagn.com

12.170 BRACKET – BUMPER – CONNECTOR – EMBLEM – HINGE – INSULATOR – LATCH – LID – NUT – PANEL – PLATE – PLUG – PROTECTOR – SHIM – STRIKER – STRUT – WEATHERSTRIP, Folding Top Compartment (Con't)

00–02	YY67	10404291	1	3.45	INSULATOR, F/TOP STOW FRT (POS #2)	7–D8,4
98–02	Y67	10445389	1	82.25	LATCH, F/TOP STOW COMPT LID (W/ACTUATOR & LID AJAR SW)	7–D8,35
98–02	Y67	10414341	1	438.00	LID, F/TOP STOW COMPT	5–D14,4
98–01	Y67	20350354	4	*.55	NUT, F/TOP STOW COMPT EXTN PNL (PUSH–IN 6.3 SQ HOLE) (NYLON) (11.175)	7–D8,41
00–02	Y67	347347	4	*1.03	NUT, F/TOP STOW COMPT EXTN PNL (UPLEVEL) (01.267)	7–D18,41
98–00	Y67 (10U)	10284823	1	252.00	PANEL, F/TOP STOW COMPT EXTN OTR (WHITE)	7–D8,39
98–02	Y67 (11U)	10284824	1	252.00	PANEL, F/TOP STOW COMPT EXTN OTR (WHITE)	7–D8,39
98–00	Y67 (23U)	10284825	1	252.00	PANEL, F/TOP STOW COMPT EXTN OTR (BLUE)	7–D8,39
98–02	Y67 (41U)	10284826	1	252.00	PANEL, F/TOP STOW COMPT EXTN OTR (BLACK)	7–D8,39
98	Y67 (53U)	10284827	1	252.00	PANEL, F/TOP STOW COMPT EXTN OTR (RED)	7–D8,39
98–02	Y67 (70U)	10284830	1	252.00	PANEL, F/TOP STOW COMPT EXTN OTR (RED)	7–D8,39
98	Y67 (87U)	10284831	1	252.00	PANEL, F/TOP STOW COMPT EXTN OTR (GREEN)	7–D8,39
98–00	Y67 (13U)	10402183	1	252.00	PANEL, F/TOP STOW COMPT EXTN OTR (SILVER)	7–D8,39
98–99	Y67 (95U)	10402184	1	252.00	PANEL, F/TOP STOW COMPT EXTN OTR (AMETHYST)	7–D8,39
98	Y67 (21U)	10402821	1	252.00	PANEL, F/TOP STOW COMPT EXTN OTR (BLUE)	7–D8,39
98–99	Y67 (58U)	10404958	1	252.00	PANEL, F/TOP STOW COMPT EXTN OTR (SUEDE)	7–D8,39
98–01	Y67 (28U)	10421288	1	252.00	PANEL, F/TOP STOW COMPT EXTN OTR (BLUE)	7–D8,39
99	Y67 (86U)	10298644	1	252.00	PANEL, F/TOP STOW COMPT EXTN OTR (RED)	7–D13,39
00–02	Y67 (79U)	10410618	1	252.00	PANEL, F/TOP STOW COMPT EXTN OTR (YELLOW)	7–D18,39
00–01	Y67 (91U)	10426575	1	252.00	PANEL, F/TOP STOW COMPT EXTN OTR (GREEN)	7–D18,39
00–02	Y67 (86U)	10437434	1	252.00	PANEL, F/TOP STOW COMPT EXTN OTR (RED)	7–D18,39
01–02	Y67 (40U)	10427429	1	252.00	PANEL, F/TOP STOW COMPT EXTN OTR (WHITE)	7–D18,39
01–02	Y67 (12U)	10427447	1	252.00	PANEL, F/TOP STOW COMPT EXTN OTR (SILVER)	7–D18,39
02	Y (21U)	10444464	1	342.00	PANEL, F/TOP STOW COMPT EXTN OTR (BLUE)	7–D18,39
98–02	Y67	10279082	LH	4.65	PLATE, F/TOP STOW COMPT LID HGE ANC	6–D17,47
98–02	Y67	10284586	RH	4.65	PLATE, F/TOP STOW COMPT LID HGE ANC	6–D17,47
98–02	Y67	20538173	1	3.45	PLUG, F/TOP STOW COMPT HOLE (BLACK) (4.8 HOLE) (14.685)	6–C15,18
98–02	Y67	10279019	1	35.00	PROTECTOR, F/TOP STOW COMPT LID	5–D14,2
98–02	Y67	10400232	1	2.95	SHIM, F/TOP STOW COMPT LID	7–D8,7

cardiagn.com

12.170 BRACKET – BUMPER – CONNECTOR – EMBLEM – HINGE – INSULATOR – LATCH – LID – NUT – PANEL – PLATE – PLUG – PROTECTOR – SHIM – STRIKER – STRUT – WEATHERSTRIP, Folding Top Compartment (Con't)

98–02	Y67	10275646	1	9.50	STRIKER, F/TOP STOW COMPT LID LAT	7–D8,8
98–02	Y67	10275941	2	17.55	STRUT, F/TOP STOW COMPT LID	7–D8,8
98–02	Y67	10444523	1	98.50	WEATHERSTRIP, F/TOP STOW COMPT LID	5–D14,7

12.180 WINDOW, Rear Hatch Window

97–02	Y07	10247317	1	1108.80	WINDOW, R/CMPT LIFT (HTCH GLS)	6–C12,1

12.181 LID – PANEL – PLUG, Rear Compartment

98–02	Y67	10421169	1	450.00	LID, R/CMPT (PRIMERED TO P/N 10421169)	6–C15,1
99–02	Y37	10421169	1	450.00	LID, R/CMPT (PRIMERED TO P/N 10421169)	6–C15,1
97–02	Y07	10400238	1	383.00	PANEL, R/CMPT L/WDO	6–C12,5
97	Y	10231979	2	3.33	PLUG, R/CMPT L/WDO PNL DRN HOLE	

12.182 EMBLEM – STRIPE, Rear Compartment Lid, Rear End Panel and Tailgate

97–02	Y	10258165	1	17.30	EMBLEM, R/CMPT LIFT WDO PNL	6–C4,6
98	Y67 INDY PACE CAR (Z4Z)	10405311	1	39.00	STRIPE, R/CMPT LID	6–C10,9

12.184 BOLT – HINGE – PLATE – SHIM, Rear Hatch Window

97	Y07	11516470	4	3.33	BOLT, R/CMPT L/WDO WDO SI HGE (08.913)	6–C12,15
98–02	Y67	10292671	4	3.40	BOLT, R/CMPT LID HGE	6–C15,13
99–02	Y37	10292671	4	3.40	BOLT, R/CMPT LID HGE	6–C15,13
97–02	Y07	10269625	2	9.30	HINGE, R/CMPT L/WDO	6–C12,14
98–02	Y67	10426103	LH	43.50	HINGE, R/CMPT LID	6–C15,12
98–02	Y67	10426104	RH	43.50	HINGE, R/CMPT LID	6–C15,12
99–02	Y37	10426103	LH	43.50	HINGE, R/CMPT LID	6–C15,12
99–02	Y37	10426104	RH	43.50	HINGE, R/CMPT LID	6–C15,12
98–02	Y67	10289507	2	1.90	PLATE, R/CMPT LID HGE ANC	6–D17,2
99–02	Y37	10289507	2	1.90	PLATE, R/CMPT LID HGE ANC	6–D17,2
97–98	Y07	10263224	2	.84	SHIM, R/CMPT LID HGE (1.0MM)	6–C12,13
97–98	Y07	10270941	4	.84	SHIM, R/CMPT LID HGE (0.5MM)	6–C12,13
99–02	Y07	10263224	6	.84	SHIM, R/CMPT LID HGE (1.0MM)	6–C12,13
99–02	Y07	10270941	2	.84	SHIM, R/CMPT LID HGE (0.5MM)	6–C12,13
01–02	Y07	10433796	AR	3.40	SHIM, R/CMPT LID HGE (BLACK) (36.0 X 72.0 X 1.0) (STL)	6–C23,13

12.187 BOLT – BRACKET – RIVET – STRUT – STUD, Rear Hatch Window

97–98	Y	10293378	4	*1.65	BOLT, R/CMPT L/WDO STRUT BRKT (WDO SI) (12.810)	6–C12,26
99–02	Y07	10293378	4	*1.65	BOLT, R/CMPT L/WDO STRUT BRKT (WDO SI) (12.810)	6–C12,26
97–99	Y07	10270971	LH	12.30	BRACKET, R/CMPT L/WDO STRUT (WDO SI)	6–C12,16
97–99	Y07	10270972	RH	12.30	BRACKET, R/CMPT L/WDO STRUT (WDO SI)	6–C12,16
00–02	Y07	10270971	LH	12.30	BRACKET, R/CMPT L/WDO STRUT (WDO SI)	6–C12,16

© 2001 GENERAL MOTORS SERVICE PARTS OPERATIONS–CHEVROLET–15Y

cardiagn.com

12.187 BOLT – BRACKET – RIVET – STRUT – STUD, Rear Hatch Window (Con't)

00–02	Y07	10270972	RH	12.30	BRACKET, R/CMPT L/WDO STRUT (WDO SI)	6–C12,16
97–02	Y07	15690531	2	*.52	RIVET, R/CMPT L/WDO STRUT BODY SI BRKT (FOR 3/16" HOLE W/ 1/4" GRIP) (09.665) (AC–DELCO #15690531)	4–J13,16
97–98	Y07	16605493	2	3.33	RIVET, R/CMPT LID POP–UP ROD SPR SEAT (4.9X21) (12.966)	6–C12,27
98–02	Y67	16605493	1	3.33	RIVET, R/CMPT LID POP–UP ROD SPR SEAT (4.9X21) (12.966)	6–C12,27
99–02	Y37	16605493	2	3.33	RIVET R/CMPT LID POP–UP ROD SPR SEAT (4.9X21) (12.966)	6–C12,27
97–02	Y07	10429204	LH	49.75	STRUT, R/CMPT L/WDO	6–C12,19
97–02	Y07	10429205	RH	49.75	STRUT, R/CMPT L/WDO	6–C12,19
98–02	Y67	10278149	2	18.05	STRUT, R/CMPT LID	6–C15,11
99–02	Y37	10278149	2	18.05	STRUT, R/CMPT LID	6–C15,11
97–99	Y07	10143220	2	1.60	STUD, R/CMPT L/WDO STRUT (BODY SI)	6–C12,17
00–02	Y07	10143220	2	1.60	STUD, R/CMPT L/WDO STRUT	6–C12,17
97–02	Y07	10143220	1	1.60	STUD, R/CMPT L/WDO STRUT WDO SI BRKT	6–C12,17

12.212 BUMPER, Rear Compartment Lid or Tailgate

97–02	Y07	10292972	2	*.51	BUMPER, R/CMPT L/WDO	6–C12,7
98–02	Y67	10292972	2	*.51	BUMPER, R/CMPT LID (POSN #1)	6–C12,7
99–02	Y37	10292972	2	*.51	BUMPER, R/CMPT LID	6–C12,7
99–02	Y37	10422620	1	8.00	BUMPER, R/CMPT LID	6–C21,25
98–99	Y67	10414378	1	3.45	BUMPER, R/CMPT LID HGE (12.170)	6–C15,22
99	Y37	10414378	1	3.45	BUMPER, R/CMPT LID HGE (12.170)	6–C15,22

12.237 NUT – REINFORCEMENT – STRIKER – SUPPORT, Rear Hatch Window

97	Y07	10237960	AR	.46	NUT, R/CMPT L/WDO LK STKR (M6X1.0) (10.512)	
98–99	Y07	10410398	AR	*.51	NUT, R/CMPT L/WDO LK STKR (M6X1.0 ITR "D" THD) (10.512)	
01–02	Y07	10410398	AR	*.51	NUT, R/CMPT L/WDO LK STKR (M6X1.0 ITR "D" THD) (10.512)	
98–02	Y67	25633101	4	7.45	NUT, R/CMPT LID LAT SUPT (M6X1X2.42) (12.243)	6–C15,5
99–02	Y37	25633101	4	7.45	NUT, R/CMPT LID LAT SUPT (M6X1X2.42) (12.243)	6–C15,5
98–02	Y67	10279694	2	1.15	REINFORCEMENT, R/CMPT LID LAT SUPT	6–D17,44
99–02	Y37	10279694	2	1.15	REINFORCEMENT, R/CMPT LID LAT SUPT	6–D17,44
97–98	Y07	10414970	2	8.85	STRIKER, R/CMPT L/WDO LAT	6–C12,8
99–02	Y07	16637685	2	7.15	STRIKER, R/CMPT L/WDO LAT	6–C18,8
98–02	Y67	10414970	1	8.85	STRIKER, R/CMPT LID LAT	6–C12,8
99–02	Y37	10414970	1	8.85	STRIKER, R/CMPT LID LAT	6–C12,8
98–02	Y67	10278683	1	18.55	SUPPORT, R/CMPT LID LAT	6–C15,7
99–02	Y37	10278683	1	18.55	SUPPORT, R/CMPT LID LAT	6–C15,7

cardiagn.com

12.242 BOLT – BRACKET – LATCH – NUT – REINFORCEMENT – SPRING, Rear Hatch Window

99	Y07	11517753	6	.27	BOLT, R/CMPT L/WDO LAT	6–C18,21
99–02	Y07	11517887	6	.27	BOLT, R/CMPT L/WDO LAT (08.900)	
99	Y37–67	11517753	2	.27	BOLT, R/CMPT LID LAT	6–C18,21
99	Y37–67	11517887	2	.27	BOLT, R/CMPT LID LAT (08.900)	
97–98	Y07	10413839	RH	53.25	BRACKET, R/CMPT L/WDO LAT	6–C12,24
97–98	Y07	10413890	LH	53.25	BRACKET, R/CMPT L/WDO LAT	6–C12,24
99–02	Y07	10403704	LH	53.25	BRACKET, R/CMPT L/WDO LAT	6–C18,24
99–02	Y07	10403705	RH	53.25	BRACKET, R/CMPT L/WDO LAT	6–C18,24
99–02	Y07	16638796	2	83.25	LATCH, R/CMPT L/WDO	6–C18,22
97–98	Y07	16637654	2	90.25	LATCH, R/CMPT LID (W/ACTUATOR)	6–C12,22
98–00	Y67	16637654	1	90.25	LATCH, R/CMPT LID (W/ACTUATOR)	6–C12,22
99–02	Y37	16637654	1	90.25	LATCH, R/CMPT LID (W/ACTUATOR)	6–C12,22
01	YY67 (1ST DES)	16637654	1	90.25	LATCH, R/CMPT LID (FOR VEHICLES BUILT W/O EMERGENCY TRUNK RELEASE LATCH SYSTEM; FOR 2ND DES SEE 10305909 W/EMERGENCY TRUNK RELEASE SYSTEM) (W/ACTUATOR)	6–C12,22
02	YY67 (1ST DES)	16637654	1	90.25	LATCH, R/CMPT LID (FOR VEHICLES BUILT W/O EMERGENCY TRUNK RELEASE LATCH SYSTEM; FOR 2ND DES SEE 10305909 W/EMERGENCY TRUNK RELEASE SYSTEM) (W/ACTUATOR)	6–C12,22
97–02	Y07	25633101	8	7.45	NUT, R/CMPT L/WDO LAT (M6X1X2.42) (12.243)	6–C12,23
97–02	Y07	10263147	4	1.50	REINFORCEMENT, R/CMPT L/WDO LAT BRKT	6–D8,6
97–98	Y07	16637696	1	1.40	SPRING, R/CMPT L/WDO LAT RTN	6–C12,28
97–98	Y 07	16637696	1	1.40	SPRING, R/D LAT	6–C12,28

12.243 ACTUATOR – CLIP – CONNECTOR – HANDLE – LATCH – RELAY – SWITCH, Rear Compartment Lid Release or Ajar

99–02	Y07	16634742	2	23.15	ACTUATOR, R/CMPT LID LAT REL (AC–DELCO #16634742)	6–C18,28
97–98	Y07	16625936	2	3.33	CLIP, R/CMPT LID LAT REL WRG HARN (R/CMPT L/WDO LATCH)	6–C12,33
98–02	Y67	16625936	1	3.33	CLIP, R/CMPT LID LAT REL WRG HARN (F/TOP STOW CMPT LID LATCH)	6–C12,33
98–02	Y67	16625936	1	3.33	CLIP, R/CMPT LID LAT REL WRG HARN (R/CMPT LID LATCH)	6–C12,33
99–02	Y37	16625936	2	3.33	CLIP, R/CMPT LID LAT REL WRG HARN	6–C12,33
02	YY	3816659	1	*.87	CLIP, R/CMPT LID LAT REL WRG HARN (7" ADJ, W/ROSEBUD FOR .25 DIA HOLE .031–.14 TH) (08.965)	6–C15,26
99	Y07	12117371	2	25.70	CONNECTOR, MOT–R/CMPT LID PULDN ACTR (3–WAY M W/LEADS) (02.530) (AC–DELCO #PT504)	6–C12,32

cardiagn.com

12.243 ACTUATOR – CLIP – CONNECTOR – HANDLE – LATCH – RELAY – SWITCH, Rear Compartment Lid Release or Ajar (Con't)

97–02	Y07 SPEAKER SYSTEM 6 (UZ6)	12101864	1	18.16	CONNECTOR, SW–R/CMPT LID AJAR IND (BLACK) (3–WAY F W/LEADS) (02.535) (AC–DELCO #PT256)	6–C12,32
97–99	Y07	12117371	2	25.70	CONNECTOR, SW–R/CMPT LID AJAR IND (3–WAY M W/LEADS) (02.530) (AC–DELCO #PT504)	6–C12,32
98–02	Y67 SPEAKER SYSTEM 6 (UZ6)	12101864	1	18.16	CONNECTOR, SW–R/CMPT LID AJAR IND (BLACK) (3–WAY F W/LEADS) (02.535) (AC–DELCO #PT256)	6–C12,32
99–02	Y37	12101864	1	18.16	CONNECTOR, SW–R/CMPT LID AJAR IND (BLACK) (3–WAY F W/LEADS) (02.535) (AC–DELCO #PT256)	6–C12,32
99–02	Y37	12117371	2	25.70	CONNECTOR, SW–R/CMPT LID AJAR IND (3–WAY M W/LEADS) (02.530) (AC–DELCO #PT504)	6–C12,32
99–00	Y67	12117371	2	25.70	CONNECTOR, SW–R/CMPT LID AJAR IND (3–WAY M W/LEADS) (02.530) (AC–DELCO #PT504)	6–C12,32
01–02	YY37	12101825	1	18.01	CONNECTOR, SW–R/CMPT LID REL (GRAY) (2–WAY F W/LEADS) (INDEX TAB CTR CAVITY A&B) (02.535) (AC–DELCO #PT217)	
01–02	Y67	10305910	1	12.00	HANDLE, R/CMPT LID LAT REL CBL	
99–02	Y07	16638796	2	83.25	LATCH, R/CMPT L/WDO (12.242)	6–C18,22
97–98	Y07	16637654	2	90.25	LATCH, R/CMPT LID (W/ACTUATOR) (12.242)	6–C12,22
98–00	Y67	16637654	1	90.25	LATCH, R/CMPT LID (W/ACTUATOR) (12.242)	6–C12,22
98–00	Y67	16637654	1	90.25	LATCH, R/CMPT LID (W/ACTUATOR) (12.242)	6–C12,22
99–02	Y37	16637654	1	90.25	LATCH, R/CMPT LID (W/ACTUATOR) (12.242)	6–C12,22
01	YY67 (2ND DES)	10305909	1	90.25	LATCH, R/CMPT LID (FOR VEHICLES BUILT W EMERGENCY TRUNK RELEASE LATCH SYSTEM; FOR 1ST DES SEE 16637654 W/O EMERGENCY TRUNK RELEASE SYSTEM.) (12.242)	6–C15,8
01	YY67 (1ST DES)	16637654	1	90.25	LATCH, R/CMPT LID (FOR VEHICLES BUILT W/O EMERGENCY TRUNK RELEASE LATCH SYSTEM; FOR 2ND DES SEE 10305909 W/EMERGENCY TRUNK RELEASE SYSTEM) (W/ACTUATOR) (12.242)	6–C12,22
02	YY67	10305909	1	90.25	LATCH, R/CMPT LID (12.242) ...	6–C15,8
02	YY67 (1ST DES)	16637654	1	90.25	LATCH, R/CMPT LID (FOR VEHICLES BUILT W/O EMERGENCY TRUNK RELEASE LATCH SYSTEM; FOR 2ND DES SEE 10305909 W/EMERGENCY TRUNK RELEASE SYSTEM) (W/ACTUATOR) (12.242)	6–C12,22

© 2001 GENERAL MOTORS SERVICE PARTS OPERATIONS–CHEVROLET–15Y

cardiagn.com

12.243 ACTUATOR – CLIP – CONNECTOR – HANDLE – LATCH – RELAY – SWITCH, Rear Compartment Lid Release or Ajar (Con't)

97–02	Y	12088567	1	16.45	RELAY, R/CMPT LID REL (GRAY) (4–WAY) (09.277) (AC–DELCO #15–8571)	2–G10,40
97–02	Y (EXC EUROPEAN PROVISIONS (VD1) (EXPORT)	10276017	1	9.31	SWITCH, F/TNK FIL DR LK REL (03.028)	5–H2,32
97–98	Y07	16608046	1	8.40	SWITCH, R/CMPT LID AJAR IND (LOCATED ON LAT IN TRUNK) (AC–DELCO #D1459C)	6–C12,31
98–02	Y67	16608046	1	8.40	SWITCH, R/CMPT LID AJAR IND (LOCATED ON LAT IN TRUNK) (AC–DELCO #D1459C)	6–C12,31
99–02	Y37	16608046	1	8.40	SWITCH, R/CMPT LID AJAR IND (LOCATED ON LAT IN TRUNK) (AC–DELCO #D1459C)	6–C12,31
97–02	Y (EXC FRT FOG LP (T96), EUROPEAN PROVISIONS (VD1) (EXPORT)	12135157	1	57.06	SWITCH, R/CMPT LID REL (AC–DELCO #D7012C)	5–G16,20
02	Y67	16608046	1	8.40	SWITCH, R/CMPT LID REL (LOCATED ON LAT IN TRUNK) (AC–DELCO #D1459C)	6–C12,31
	*EXPORT***	*EXPORT***	*EXPORT***	*EXPORT***	*EXPORT***	*EXPORT*
97–02	Y EUROPEAN PROVISIONS (VD1) (EXPORT)	10280957	1	66.19	SWITCH, R/CMPT LID & FUEL FIL DR REL (AC–DELCO #D7007C)	5–H2,32

12.249 CONNECTOR – SPRING, Rear Hatch \Window

98	Y	12117371	1	25.70	CONNECTOR, R/CMPT LID LK CYL (3–WAY M W/LEADS) (02.530) (AC–DELCO #PT504)	
00–02	Y67	12117371	1	25.70	CONNECTOR, R/CMPT LID LK CYL (3–WAY M W/LEADS) (02.530) (AC–DELCO #PT504)	
98–02	Y67	16637696	1	1.40	SPRING, R/CMPT LID LAT (12.242)	6–C15,24
99–02	Y37	16637696	1	1.40	SPRING, R/CMPT LID LAT (12.242)	6–C15,24

12.269 RETAINER – SEAL – SEALING STRIP – WEATHERSTRIP, Rear Hatch Window

99–02	Y07	10427824	2	.44	RETAINER, R/CMPT L/WDO SEAL	6–C18,27
97–02	Y07	10401667	1	17.65	SEAL, R/CMPT L/WDO FRT AUX	6–C12,4
97–02	Y07	10401665	1	16.65	SEAL, R/CMPT L/WDO RR AUX (POSN #1)	6–C12,2
97–98	Y07	10407727	1	29.50	SEAL, R/CMPT L/WDO RR AUX (FRT SECONDARY SEAL) (POSN #2) (NO TAIL AT END OF SEAL)	6–C12,3
99–02	Y07	10438026	1	26.75	SEAL, R/CMPT L/WDO RR AUX (FRONT SECONDARY SEAL)	6–C18,3
98–02	Y67	10408626	2	8.95	SEALING STRIP, R/CMPT LID AUX	5–D14,5
97–02	Y07	10236980	1	99.00	WEATHERSTRIP, R/CMPT L/WDO (EPDM EXTRUDED)	6–C12,10
97–00	Y07	10280750	1	18.05	WEATHERSTRIP, R/CMPT L/WDO	6–C12,6
98–02	Y67	10255033	1	46.25	WEATHERSTRIP, R/CMPT LID	6–C21,24
99–02	Y37	10255033	1	46.25	WEATHERSTRIP, R/CMPT LID	6–C21,24

© 2001 GENERAL MOTORS SERVICE PARTS OPERATIONS – CHEVROLET – 15Y

cardiagn.com

12.659 NUT – RIVET – STUD, Front Body Hinge Pillar

97	Y	10237960	13	.46	NUT, BODY H/PLR TIE BAR (M6X1.0) (10.512)	5–D4,12
98–02	Y	10410398	13	*.51	NUT, BODY H/PLR TIE BAR (M6X1.0 ITR "D" THD) (10.512)	5–D7,9
98–02	Y	10274355	AR	*.52	RIVET, BODY H/PLR OTR PNL UPR REINF (10.512)	
97–02	Y	10290211	1	7.45	STUD, BODY H/PLR TIE BAR	6–D5,49

12.684 RETAINER – SEALING STRIP, Body Lock Pillar

98–02	Y67	20538173	2	3.45	RETAINER, BODY L/PLR UPR SEAL (BLACK) (4.8 HOLE) (14.685)	5–D14,8
98–02	Y67	11515174	1	*1.75	SEALING STRIP, BODY L/PLR LWR REINF (4 1/4"X7 1/2") (TRIM AS REQ'D) (15.492)	
02	Y07–37	11515174	1	*1.75	SEALING STRIP, BODY L/PLR UPR (4 1/4"X7 1/2") (TRIM AS REQ'D) (15.492)	
02	Y07–37	11515174	1	*1.75	SEALING STRIP, BODY L/PLR UPR REINF (4 1/4"X7 1/2") (TRIM AS REQ'D) (15.492)	

12.800 RETAINER – SCREEN, Cowl Top Vent Louver

97–02	Y	21075686	4	*.51	RETAINER, AIR INL SCRN (10.154)	5–E2,7
97	Y	10247327	1	68.75	SCREEN, AIR INL (#86) (W/SEAL & FRM)	5–E2,8
97	Y	10446063	1	68.75	SCREEN, AIR INL (#86)	5–E2,8
98–02	Y	10446063	1	68.75	SCREEN, AIR INL (#86)	5–E2,8

12.804 BOLT – INSULATOR – PANEL – SEAL – TUBE, Shroud and Dash and Vent Duct Panel

01	Y	10175814	3	3.33	BOLT, PLNM PNL (12.981)	
97–02	Y	10433334	1	69.50	INSULATOR, DA PNL	5–G12,1
97–02	Y	10424966	1	251.00	PANEL, DA	6–D5,27
97–02	Y	10247310	1	82.25	PANEL, PLNM LWR	6–D5,31
97–98	Y	10247311	1	82.25	PANEL, PLNM UPR	6–D5,32
99–01	Y (EXC HEAD UP DISPLAY (UV6)	10247311	1	82.25	PANEL, PLNM UPR	6–D5,32
99–01	Y HEAD UP DISPLAY (UV6)	10410117	1	114.00	PANEL, PLNM UPR	6–D5,32
02	YY07–67 HEAD UP DISPLAY (UV6)	10410117	1	114.00	PANEL, PLNM UPR	6–D5,32
02	YY37	10410117	1	114.00	PANEL, PLNM UPR	6–D5,32
02	Y07–67 (EXC HEAD UP DISPLAY (UV6)	10247311	1	82.25	PANEL, PLNM UPR	6–D5,32
97–02	Y	11515174	1	*1.75	SEAL, PLNM PNL (4 1/4"X7 1/2") (TRIM AS REQ'D) (15.492)	6–D5,23
97–02	Y	10280066	1	17.80	TUBE, PLNM DRN (POSN #2)	6–D5,34
97–02	Y	14047487	3	12.70	TUBE, PLNM DRN (POSN #1)	6–D5,26

12.807 BOLT – FRAME – RETAINER – WEATHERSTRIP, Windshield Frame

97	Y	3541904	5	3.45	BOLT, W/S FRM W/STR (POS#1) (4.2X1.41X10, 11.1O.D., W THD SLR) (12.812)	
97–02	Y	10420764	1	920.00	FRAME, W/S	5–D7,3
97–02	Y	20540336	4	3.45	RETAINER, W/S FRM W/STR (PAINT TO MATCH) (FITS .18 HOLE, .7 LG, .43 OD, NYLON) (14.630)	6–E8,25

© 2001 GENERAL MOTORS SERVICE PARTS OPERATIONS–CHEVROLET–15Y

cardiagn.com

12.807 BOLT – FRAME – RETAINER – WEATHERSTRIP, Windshield Frame (Con't)

97–02	Y07	10432623	1	241.00	WEATHERSTRIP, W/S FRM	6–E8,24
98–02	Y67	10305948	1	241.00	WEATHERSTRIP, W/S FRM	5–D14,32

12.810 BEZEL – BOLT – BRACKET – HANDLE – LOCATOR – MOLDING – NUT – PANEL – PIN – PLATE – RETAINER – SPACER – WEATHERSTRIP, Roof Panel

NOTE: PLEASE REFER TO ACCESSORY GROUP 21.552 FOR WINDOWS NOT FOUND.

97–02	Y07	10284478	2	3.45	BEZEL, RF LIFT OFF PNL/WDO STOW FRT BRKT MT	6–E24,4
97–02	Y07 DUAL REMOVEABLE ROOF (C2L)	10293378	8	*1.65	BOLT, RF LIFT OFF PNL/WDO LAT HDL	6–E8,10
97–02	Y07 CLEAR ROOF PANEL (CC3), REMOVABLE SUNROOF (CF7)	10293378	4	*1.65	BOLT, RF LIFT OFF PNL/WDO LAT HDL	6–E8,10
00–01	Y67 CONV ROOF (C05)	10293378	4	*1.65	BOLT, RF LIFT OFF PNL/WDO LAT HDL	6–E8,10
01–02	YY67 CONV ROOF (C05), (16T)	10293378	4	*1.65	BOLT, RF LIFT OFF PNL/WDO LAT HDL	6–E8,10
97–02	Y07	15567059	4	3.33	BOLT, RF LIFT OFF PNL/WDO RR LOCR BRKT (HEX M10X1.5X28) (16.545)	6–D23,37
97–02	Y07	10092102	4	*.52	BOLT, RF PNL (LWR RF) (M4.2X1.15X20)	6–E14,24
99	Y37	11516932	4	*.61	BOLT, RF PNL FRT BRKT ("UPR FRT" ATTACHES TO FRAME–V//S) (08.900)	
99–02	Y37	15567059	4	3.33	BOLT, RF PNL RR BRKT (UPR RR M10" INTO RF BOW) (HEX M10X1.5X28) (16.545)	6–D23,37
97–02	Y07	10262515	LH	3.40	BRACKET, RF LIFT OFF PNL/WDO RR LOCR	6–E8,21
97–02	Y07	10262516	RH	3.40	BRACKET, RF LIFT OFF PNL/WDO RR LOCR	6–E8,21
97–02	Y07	10284474	2	16.45	BRACKET, RF LIFT OFF PNL/WDO STOW FRT (W/COVER & INSULATOR) (12.815)	6–E24,3
99–02	Y37	10290699	LH	4.95	BRACKET, RF PNL FRT (UPR FRT)	5–D7,1
99–02	Y37	10290700	RH	4.95	BRACKET, RF PNL FRT (UPR FRT)	5–D7,1
99–01	Y37	10291419	LH	7.85	BRACKET, RF PNL RR (UPR RR)	6–D23,38
99–01	Y37	10291420	RH	7.85	BRACKET, RF PNL RR (UPR RR)	6–D23,38
97–01	Y07 CLEAR ROOF PANEL (CC3), REMOVABLE SUNROOF (CF7)	10449578	LH	106.00	HANDLE, RF LIFT OFF PNL/WDO LAT	6–E8,9
97–02	Y07 DUAL REMOVEABLE ROOF (C2L)	10449578	LH	106.00	HANDLE, RF LIFT OFF PNL/WDO LAT	6–E8,9
97–01	Y07 CLEAR ROOF PANEL (CC3), REMOVABLE SUNROOF (CF7)	10449579	RH	106.00	HANDLE, RF LIFT OFF PNL/WDO LAT	6–E8,9
97–02	Y07 DUAL REMOVEABLE ROOF (C2L)	10449579	RH	106.00	HANDLE, RF LIFT OFF PNL/WDO LAT	6–E8,9
97–02	Y07	10401060	LH	31.25	HANDLE, RF LIFT OFF PNL/WDO STOW LAT (RUBBER BUMPER–POA)	6–C12,35
97–02	Y07	10401061	RH	31.25	HANDLE, RF LIFT OFF PNL/WDO STOW LAT (RUBBER BUMPER–POA)	6–C12,35
97–02	Y07	10270313	2	8.45	LOCATOR, RF LIFT OFF PNL/WDO RR	6–E8,22

cardiagn.com

12.810 BEZEL – BOLT – BRACKET – HANDLE – LOCATOR – MOLDING – NUT – PANEL – PIN – PLATE – RETAINER – SPACER – WEATHERSTRIP, Roof Panel (Con't)

97–02	Y07 CLEAR ROOF PANEL (CC3), DUAL REMOVEABLE ROOF (C2L)	10401718	LH	17.30	MOLDING, RF LIFT OFF PNL/WDO RVL (12.075)	6–C4,2
97–02	Y07 CLEAR ROOF PANEL (CC3), DUAL REMOVEABLE ROOF (C2L)	10401719	RH	17.30	MOLDING, RF LIFT OFF PNL/WDO RVL (12.075)	6–C4,2
97–02	Y07 REMOVABLE SUNROOF (CF7), DUAL REMOVEABLE ROOF (C2L)	10438024	LH	17.30	MOLDING, RF LIFT OFF PNL/WDO RVL	6–C4,2
97–02	Y07 REMOVABLE SUNROOF (CF7), DUAL REMOVEABLE ROOF (C2L)	10438025	RH	17.30	MOLDING, RF LIFT OFF PNL/WDO RVL	6–C4,2
97–02	Y07	10281487	2	*.69	NUT, RF LIFT OFF PNL/WDO RR LOCR BRKT (POSN #1) (CENTER OF RF PANEL BOW) (04.665)	6–E8,38
97–02	Y07	10285255	4	3.45	NUT, RF LIFT OFF PNL/WDO RR LOCR BRKT (POSN #2) (AT ENDS OF RF PANEL BOW)	6–D23,39
99	Y37	10258563	7	3.45	NUT, RF PNL (14.686)	
99–02	Y37	10285255	4	3.45	NUT, RF PNL RR BRKT (UPR RR M10")	6–D23,39
97–02	Y07	10289224	1	219.00	PANEL, RF	6–E1[illegible],25
99–02	Y37	10255235	1	2687.00	PANEL, RF	6–D23,47
97–02	Y07 REMOVABLE SUNROOF (CF7), DUAL REMOVEABLE ROOF (C2L)	12453435	1	1118.00	PANEL, RF LIFT OFF (PRIMED) (NON–TRANSPARENT)	6–E8,1
97–02	Y07 CLEAR ROOF PANEL (CC3), REMOVABLE SUNROOF (CF7)	10263243	2	8.15	PIN, RF LIFT OFF PNL/WDO RR LOC	6–E8,44
97–02	Y07 DUAL REMOVEABLE ROOF (C2L)	10263243	4	8.15	PIN, RF LIFT OFF PNL/WDO RR LOC	6–E8,44
97–02	Y07	10277360	2	3.45	PLATE, RF LIFT OFF PNL/WDO RR LOCR ANC	6–E8,20
97–02	Y07	10284475	2	7.30	PLATE, RF LIFT OFF PNL/WDO STOW FRT BRKT STUD (UPR SIDE OF R/CMPT PNL) (BLACK)	6–E24,6
97–02	Y07	10284890	2	3.45	PLATE, RF LIFT OFF PNL/WDO STOW FRT BRKT STUD (UNDERSIDE OF R/CMPT PNL)	6–D8,14
97–02	Y07	10252874	1	21.15	RETAINER, RF LIFT OFF PNL/WDO RR W/STR	6–E8,40
97–02	Y07	20538173	4	3.45	RETAINER, RF LIFT OFF PNL/WDO RR W/STR (PUSH IN) (#83) (BLACK) (4.8 HOLE) (14.685)	6–E8,16
99–02	Y	10127825	2	.74	SPACER, RF PNL (NEUTRAL) (6.5MM) (10.027)	7–D24,10
00	Y37	10445128	2	3.45	SPACER, RF PNL	7–D24,10
00	Y37	10445128	2	3.45	SPACER, RF PNL	7–D24,10
97	Y07	10415918	1	80.50	WEATHERSTRIP, RF LIFT OFF PNL/WDO RR	6–E8,14
98–02	Y07	10415918	1	80.50	WEATHERSTRIP, RF LIFT OFF PNL/WDO RR	6–E8,14

cardiagn.com

12.811 BOLT – BUMPER – COVER – LATCH – RETAINER – STRIKER, Roof Ventilation

97	Y	11508231	2	*.52	BOLT, RF LIFT OFF PNL/WDO LAT TR CVR (M4.2X1.41X16) (08.977)	
00	Y07 DUAL REMOVEABLE ROOF (C2L)	11508231	4	*.52	BOLT, RF LIFT OFF PNL/WDO LAT TR CVR (M4.2X1.41X16) (08.977)	
97–99	Y07	11516932	4	*.61	BOLT, RF LIFT OFF WDO FRT STKR (08.900)	
97–02	Y07	10290999	1	5.10	BUMPER, RF LIFT OFF PNL/WDO RR LAT HDL	6–D8,38
97–02	Y07 CLEAR ROOF PANEL (CC3), REMOVABLE SUNROOF (CF7)	10267173	2	3.05	COVER, RF LIFT OFF PNL/WDO LAT TR	6–E8,11
97–02	Y07 DUAL REMOVEABLE ROOF (C2L)	10267173	4	3.05	COVER, RF LIFT OFF PNL/WDO LAT TR	6–E8,11
97–02	Y07 CLEAR ROOF PANEL (CC3), REMOVABLE SUNROOF (CF7)	10275882	1	7.95	COVER, RF LIFT OFF PNL/WDO LAT TR (RR CTR CVR)	6–E8,42
97–02	Y07 DUAL REMOVEABLE ROOF (C2L)	10275882	2	7.95	COVER, RF LIFT OFF PNL/WDO LAT TR (RR CTR CVR)	6–E8,42
98–02	Y67	10267173	2	3.05	COVER, RF LIFT OFF PNL/WDO LAT TR	6–E8,11
97–02	Y07 CLEAR ROOF PANEL (CC3), REMOVABLE SUNROOF (CF7)	10400239	1	114.00	LATCH, RF LIFT OFF PNL/WDO RR	6–E8,43
97–02	Y07 DUAL REMOVEABLE ROOF (C2L)	10400239	2	114.00	LATCH, RF LIFT OFF PNL/WDO RR	6–E8,43
97–02	Y07 CLEAR ROOF PANEL (CC3), REMOVABLE SUNROOF (CF7), DUAL REMOVEABLE ROOF (C2L)	10290472	2	3.33	RETAINER, RF LIFT OFF PNL/WDO LAT TR CVR	6–E8,51
97–02	Y07	10263229	LH	31.00	STRIKER, RF LIFT OFF PNL/WDO FRT	6–E8,37
97–02	Y07	10263230	RH	31.00	STRIKER, RF LIFT OFF PNL/WDO FRT	6–E8,37
97–02	Y07	10263234	1	9.35	STRIKER, RF LIFT OFF PNL/WDO RR	6–E8,30

12.840 NUT – PANEL, Front Body Hinge Pillar

97–02	Y	10281493	AR	*1.00	NUT, BODY H/PLR INR PNL (03.015)	5–D7,12
97–02	Y	27000835	13	3.33	NUT, BODY H/PLR INR UPR PNL (INSERT M8X1.25) (STEEL) (06.760)	5–D7,16
97–02	Y	10409987	LH	23.55	PANEL, BODY H/PLR INR LWR (#43)	6–D5,22
97–02	Y	10409988	RH	23.55	PANEL, BODY H/PLR INR LWR (#43)	6–D5,22
97–02	Y	10431695	LH	57.00	PANEL, BODY H/PLR OTR	6–D5,14
98–02	Y	10431696	RH	57.00	PANEL, BODY H/PLR OTR (#42)	6–D5,14

12.895 PANEL – SEAL, Front Door Inner/Outer Panel

97–02	Y	12529725	LH	291.00	PANEL, FRT S/D OTR	7–E2,7
97–02	Y	88894418	RH	291.00	PANEL, FRT S/D OTR	
98–02	Y	11515174	AR	*1.75	SEAL, FRT S/D INR PNL HOLE (4 1/4"X7 1/2") (TRIM AS REQ'D) (15.492)	5–H12,52

cardiagn.com

12.940 BOLT – PANEL – REINFORCEMENT – VALVE, Rear Quarter Outer

97–02	Y07	11516965	8	*1.29	BOLT, QTR OTR PNL (POSN #1, QTR TO HTCH SURROUND) (08.906)	6–E17,19
98	Y	11514139	4	*1.08	BOLT, QTR OTR PNL (QTR TO FASCIA) (M6X1X25) (08.900)	
98–02	Y67	11516965	8	*1.29	BOLT, QTR OTR PNL (POSN #3) (QTR TO TONNEAU DECK SURROUND) (08.906)	6–E17,19
99–02	Y37	11516965	8	*1.29	BOLT, QTR OTR PNL (POSN #3) (QTR TO TONNEAU DECK SURROUND) (08.906)	6–E17,19
97–98	Y07	10418926	LH	375.00	PANEL, QTR OTR (1" NOTCH AT FRONT EDGE OF FLANGE SURFACE MATING W/HATCH)	6–E14,10
97–02	Y07	10418927	RH	375.00	PANEL, QTR OTR (1" NOTCH AT FRONT EDGE OF FLANGE SURFACE MATING W/HATCH)	6–E14,27
98–02	Y67	10418388	LH	375.00	PANEL, QTR OTR	6–E17,21
98–02	Y67	10418389	RH	375.00	PANEL, QTR OTR	6–E17,35
99–02	Y07	10418926	LH	375.00	PANEL, QTR OTR (1" NOTCH AT FRONT EDGE OF FLANGE SURFACE MATING W/HATCH)	6–E14,10
99–02	Y37	10418388	LH	375.00	PANEL, QTR OTR	6–E17,21
99–02	Y37	10418389	RH	375.00	PANEL, QTR OTR	6–E17,35
97–02	Y	10278282	LH	6.20	REINFORCEMENT, QTR OTR UPR PNL (OTR TO FASCIA) (07.831)	6–E14,28
97–02	Y	10408625	RH	6.35	REINFORCEMENT, QTR OTR UPR PNL (QTR TO FASCIA)	6–E14,28
97–02	Y	10285751	1	9.30	VALVE, QTR OTR PNL PRESS RLF	6–E24,18

12.942 BAR – EXTENSION – PANEL – REINFORCEMENT, Rear Body Lock Pillar

97–00	Y	10412957	1	91.50	BAR, BODY L/PLR UPR TIE (#61)	6–D8,23
01	Y (1ST DES)	10412957	1	91.50	BAR, BODY L/PLR UPR TIE (#61) (CARS BUILT WITH AND AFTER THE LAST EIGHT DIGIT OF VIN 15117747;FOR 2ND DESIGN SEE 10438462)	6–D8,23
01	Y (2ND DES)	10438462	1		BAR, BODY L/PLR UPR TIE (#61) (CARS BUILT PRIOR TO LAST EIGHT DIGIT OF VIN 15117747;FOR 1ST DESIGN SEE 10412957)	6–D8,23
02	Y	10438462	1		BAR, BODY L/PLR UPR TIE (#61)	6–D8,23
97–99	Y	10252545	LH	27.00	EXTENSION, BODY L/PLR OTR PNL	6–D8,18
97–99	Y	10252546	RH	27.00	EXTENSION, BODY L/PLR OTR PNL	6–D8,18
00–01	Y	10428922	LH	27.00	EXTENSION, BODY L/PLR OTR PNL	6–D8,18
00	Y	10428923	RH	27.00	EXTENSION, BODY L/PLR OTR PNL	6–D8,18
01	Y (1ST DES)	10428923	RH	27.00	EXTENSION, BODY L/PLR OTR PNL (CARS BUILT WITH AND AFTER THE LAST EIGHT DIGIT OF VIN 15117747;FOR 2ND DESIGN SEE 10438547)	6–D8,18

cardiagn.com

12.942 BAR – EXTENSION – PANEL – REINFORCEMENT, Rear Body Lock Pillar (Con't)

01	Y (2ND DES)	10438546	RH	27.75	EXTENSION, BODY L/PLR OTR PNL (CARS BUILT PRIOR TO LAST EIGHT DIGIT OF VIN 15117747;FOR 1ST DESIGN SEE 10440111)	6–D8,18
01	Y (2ND DES)	10438547	LH	27.75	EXTENSION, BODY L/PLR OTR PNL (#111) (CARS BUILT PRIOR TO LAST EIGHT DIGIT OF VIN 15117747;FOR 1ST DESIGN SEE 10428923)	6–D8,18
02	Y	10438546	LH	27.75	EXTENSION, BODY L/PLR OTR PNL	6–D8,18
02	Y	10438547	RH	27.75	EXTENSION, BODY L/PLR OTR PNL (#111)	6–D8,18
97–98	Y	10252541	LH	27.00	EXTENSION, BODY L/PLR UPR TIE BAR (ITEM #114) (INR)	6–D8,21
97–00	Y	10252542	RH	27.00	EXTENSION, BODY L/PLR UPR TIE BAR (ITEM #114)	6–D8,21
97–02	Y	10262081	LH	27.75	EXTENSION, BODY L/PLR UPR TIE BAR (ITEM #114) (OTR)	6–D8,21
99	Y	10296359	LH	27.00	EXTENSION, BODY L/PLR UPR TIE BAR (ITEM #114) (INR)	6–D8,21
00	Y	10252541	LH	27.00	EXTENSION, BODY L/PLR UPR TIE BAR (ITEM #114) (INR)	6–D8,21
01	Y (1ST DES)	10252541	LH	27.00	EXTENSION BODY L/PLR UPR TIE BAR (ITEM #114) (INR) (CARS BUILT WITH AND AFTER THE LAST EIGHT DIGIT OF VIN 15117747;FOR 2ND DESIGN SEE 10438474)	6–D8,21
01	Y (1ST DES)	10252542	RH	27.00	EXTENSION, BODY L/PLR UPR TIE BAR (ITEM #114) (CARS BUILT WITH AND AFTER THE LAST EIGHT DIGIT OF VIN 15117747;FOR 2ND DESIGN SEE 10438475)	6–D8,21
01	Y (2ND DES)	10438474	LH	27.75	EXTENSION, BODY L/PLR UPR TIE BAR (#114, INNER) (CARS BUILT PRIOR TO LAST EIGHT DIGIT OF VIN 15117747;FOR 1ST DESIGN SEE 10252541)	6–D8,21
01	Y (2ND DES)	10438475	RH	27.75	EXTENSION, BODY L/PLR UPR TIE BAR (#114) (CARS BUILT PRIOR TO LAST EIGHT DIGIT OF VIN 15117747;FOR 1ST DESIGN SEE 10252542)	6–D8,21
02	Y	10438474	LH	27.75	EXTENSION, BODY L/PLR UPR TIE BAR (#114, INNER)	6–D8,21
02	Y	10438475	RH	27.75	EXTENSION, BODY L/PLR UPR TIE BAR (#114)	6–D8,21
97–00	Y	12369436	LH	80.50	PANEL, BODY L/PLR OTR (#54) .	6–D8,19
97–00	Y	12369437	RH	80.50	PANEL, BODY L/PLR OTR (#54) .	6–D8,19
01	Y (2ND DES)	12369436	LH	80.50	PANEL, BODY L/PLR OTR (#54) (CARS BUILT PRIOR TO LAST EIGHT DIGIT OF VIN 15117747;FOR 1ST DESIGN SEE 88951187)	6–D8,19

cardiagn.com

12.942 BAR – EXTENSION – PANEL – REINFORCEMENT, Rear Body Lock Pillar (Con't)

01	Y (2ND DES)	12369437	RH	80.50	PANEL, BODY L/PLR OTR (#54) (CARS BUILT PRIOR TO LAST EIGHT DIGIT OF VIN 15117747;FOR 1ST DESIGN SEE 88951188)	6–D8,19
01	Y (1ST DES)	88951187	LH	79.75	PANEL, BODY L/PLR OTR (#54) (CARS BUILT WITH AND AFTER THE LAST EIGHT DIGIT OF VIN 15117747;FOR 2ND DESIGN SEE 12369436)	6–D8,19
01	Y (1ST DES)	88951188	RH	79.75	PANEL, BODY L/PLR OTR (#54) (CARS BUILT WITH AND AFTER THE LAST EIGHT DIGIT OF VIN 15117747;FOR 2ND DESIGN SEE 12369437)	6–D8,19
02	Y	88951187	LH	79.75	PANEL, BODY L/PLR OTR (#54)	6–D8,19
02	Y	88951188	RH	79.75	PANEL, BODY L/PLR OTR (#54)	6–D8,19
98–02	Y67	10414164	LH	10.45	PANEL, BODY L/PLR OTR UPR	6–D17,33
98–02	Y67	10414165	RH	10.45	PANEL, BODY L/PLR OTR UPR	6–D17,33
98–02	Y67	10279074	2	1.40	REINFORCEMENT, BODY L/PLR	6–D17,46

12.944 BRACKET – INSULATOR – LINER – PANEL, Rear Wheelhouse

97–02	Y	10281372	6	3.45	BRACKET, RR W/H LNR	6–D8,7
00–02	Y07	20464592	1	118.00	INSULATOR, RR W/H PNL FIL (15.492)	
97–00	Y	10253795	LH	78.50	LINER, RR W/H PNL	6–E14,12
97–99	Y	10411578	RH	78.50	LINER, RR W/H PNL (INJECTION MOLDED) (MUST BE DRILLED FOR 1999 AND PRIOR)	6–E14,22
00–02	Y07	10411578	RH	78.50	LINER, RR W/H PNL	6–E14,22
00	Y37–67	10411578	RH	78.50	LINER, RR W/H PNL (NEW VAPOR REL SYS)	6–E14,22
01–02	Y07–67	10253795	LH	78.50	LINER, RR W/H PNL	6–E14,12
01–02	Y37	10424681	RH	68.00	LINER, RR W/H PNL	6–E20,37
01–02	Y37	10424682	LH	68.00	LINER, RR W/H PNL	6–E20,25
01–02	Y67	10411578	RH	78.50	LINER, RR W/H PNL (NEW VAPOR REL SYS)	6–E14,22
97–98	Y07	12458932	RH	43.00	PANEL, BODY L/PLR INR (#55) (12.942)	6–D8,20
97–98	Y07	12458933	LH	43.00	PANEL, BODY L/PLR INR (#55) (12.942)	6–D8,20
98–02	Y67	12458930	RH	58.00	PANEL, BODY L/PLR INR	6–D17,20
98–02	Y67	12458931	LH	58.00	PANEL, BODY L/PLR INR	6–D17,20
99–02	Y07–37	12458932	RH	43.00	PANEL, BODY L/PLR INR (#55) (12.942)	6–D8,20
99–02	Y07–37	12458933	LH	43.00	PANEL, BODY L/PLR INR (#55) (12.942)	6–D8,20

12.945 ACTUATOR – BRACKET – BUMPER – CONNECTOR – DOOR – NUT – STRIPE – SWITCH, Fuel Tank Filler Door

97–02	Y	10275633	1	58.25	ACTUATOR, F/TNK FIL DR LK (INCLS FUEL DOOR RELEASE LEVER)	2–I19,62
97–02	Y	10280943	1	3.45	BRACKET, F/TNK FIL DR LK ACTR	6–D8,4
97–02	Y	3547884	2	.74	BUMPER, F/TNK FIL DR	2–I19,61
97–02	Y	10276643	1	.17	BUMPER, F/TNK FIL DR HGE (10.263)	2–I19,54

cardiagn.com

12.945 ACTUATOR – BRACKET – BUMPER – CONNECTOR – DOOR – NUT – STRIPE – SWITCH, Fuel Tank Filler Door (Con't)

97–00	Y	12101888	1	18.01	CONNECTOR, SOL–F/TNK FIL DR LK ACTR (BLACK) (2–WAY F W/LEADS) (02.535) (AC–DELCO #PT159)	2–I14,62
97–00	Y	10429498	1	140.00	DOOR, F/TNK FIL (SMC DR W/STEEL HGE)	6–E14,19
01–02	Y	10443229	1	140.00	DOOR, F/TNK FIL (SMC DR W/STEEL HGE)	6–E14,19
97–02	Y	3537631	1	3.45	NUT, F/TNK FIL DR LK ACTR (TO PCKT, POSN #1) (M8X1.0X4.3) (HEX)	2–I19,59
98	Y67 INDY PACE CAR (Z4Z)	10405310	1	8.95	STRIPE, F/TNK FIL DR	6–C10,2
97–02	Y (EXC EUROPEAN PROVISIONS (VD1) (EXPORT)	10276017	1	9.31	SWITCH, F/TNK FIL DR LK REL (03.028)	
	*EXPORT**********EXPORT**********EXPORT**********EXPORT**********EXPORT*					
97–02	Y EUROPEAN PROVISIONS (VD1) (EXPORT)	10280957	1	66.19	SWITCH, R/CMPT LID & FUEL FIL DR REL (12.243) (AC–DELCO #D7007C)	

12.952 BOW – SEALER, Roof

97–98	Y07	12455670	1	292.00	BOW, RF PNL (#62)	6–D8,33
99–02	Y07	12459091	1	269.00	BOW, RF PNL	6–D8,33
99–02	Y37	12459092	1	269.00	BOW, RF PNL	6–D23,40
98–99	Y67 CONV ROOF (C05), (16T), VINYL TOP, DK ANTELOPE MET (67T)	12457478	1	228.00	BOW, RF PNL #3	7–D4,4
00–02	YY67 CONV ROOF (C05), (16T)	12457478	1	228.00	BOW, RF PNL #3	7–D4,4
97–99	Y07	14064578	2	3.33	SEALER, RF PNL BOW OTR (POSN #2) (09.665)	6–E14,29
00–02	Y07	14064578	2	3.33	SEALER, RF PNL BOW OTR (POSN #2) (09.665)	6–E14,29

12.966 BOLT – BRACKET – INSULATOR – NUT – PLATE – SEAL, Rear End

99–02	Y37	10284014	6	3.33	BOLT, BODY UPR RR PNL BRKT (LWR RR) (M6.3X1.27–25 HEX HD) (07.833)	6–D23,14
99–02	Y37	10280465	3	6.65	BRACKET, BODY UPR RR PNL (LWR RR, POSN #2 & #3 LH & RH) (12.940)	6–D23,6
99–00	Y07	20464593	2	12.90	INSULATOR, R/END PNL (54" WIDE, SOLD BY THE FOOT, CUT AS REQ) (15.492)	7–I20,22
99	Y	10410398	2	*.51	NUT, BODY UPR RR PNL BRKT (M6X1.0 ITR "D" THD) (10.512)	
99–02	Y37	10410398	AR	*.51	NUT, BODY UPR RR PNL BRKT (M6X1.0 ITR "D" THD) (10.512)	
97–02	Y	10264812	2	3.45	PLATE, BODY UPR RR PNL SUPT ANC (12.980)	6–D8,8
98–02	Y	10415038	4	3.45	SEAL, BODY UPR RR PNL SUPT ANC PLT (15.222)	6–D8,55

12.975 REINFORCEMENT, Cargo Compartment and Floor

97–02	Y	10299652	LH	15.15	REINFORCEMENT, FLR K/UP PNL	6–D2,13
97–02	Y	10299653	RH	15.15	REINFORCEMENT, FLR K/UP PNL	6–D2,13

cardiagn.com

12.977 LATCH, Cargo Compartment and Floor

97–02	Y	10290666	2	13.35	LATCH, FLR K/UP PNL CPT	7–I4,17

12.980 BAR – BOLT – BRACE – BRACKET – EXTENSION – INSULATOR – PANEL KIT – PLATE – RAIL – REINFORCEMENT – SPACER – SUPPORT, Floor Pan

97–02	Y	10247225	2	12.65	BAR, FLR PNL #1 CR (#30.2)	6–D8,30
97–02	Y	10410261	2	11.45	BAR, FLR PNL #2 CR	6–D8,29
97	Y	11515704	AR	*1.49	BOLT, FLR PNL TUN REINF (HEX W/CON WA, M6X1X16, 13 THD, 17 OD, 9.8, 7111M, MACH) (08.900)	
97–01	Y	10293680	RH	60.75	BRACE, FLR PNL TUN FRT	6–D2,20
97–01	Y	10464631	LH	60.75	BRACE, FLR PNL TUN FRT	6–D2,20
02	Y	10438452	RH	59.05	BRACE, FLR PNL TUN FRT (#35)	6–E2,20
02	Y	10438453	LH	59.05	BRACE, FLR PNL TUN FRT (#35)	6–E2,20
97–01	Y	10293681	LH	50.75	BRACE, FLR PNL TUN RR	6–D2,1
97–01	Y	10293682	RH	50.75	BRACE, FLR PNL TUN RR	6–D2,1
02	Y	10438455	LH		BRACE, FLR PNL TUN RR (#36)	6–E2,1
02	Y	10438456	RH		BRACE, FLR PNL TUN RR (#36)	6–E2,1
97–02	Y	10262059	LH	13.70	BRACE, U/B FRT S/RL UPR (07.039)	6–D5,21
97–02	Y	10262060	RH	13.70	BRACE, U/B FRT S/RL UPR (07.039)	6–D5,21
97–02	Y	10271958	1	25.00	BRACKET, DRVR F/RST	6–D5,40
97–02	Y	10284285	LH	5.70	BRACKET, FLR PNL TUN PNL SI FRT	6–D2,10
97–02	Y	10284286	RH	5.70	BRACKET, FLR PNL TUN PNL SI FRT	6–D2,10
97–02	Y	10284287	LH	5.70	BRACKET, FLR PNL TUN PNL SI RR	6–D2,4
97–02	Y	10284288	RH	5.70	BRACKET, FLR PNL TUN PNL SI RR	6–D2,4
97–01	Y	10250149	LH	14.55	BRACKET, FLR PNL TUN REINF	6–D2,8
97–01	Y	10250150	RH	14.55	BRACKET, FLR PNL TUN REINF	6–D2,8
02	Y	10449844	LH	14.15	BRACKET, FLR PNL TUN REINF (#32)	6–E2,8
02	Y	10449845	RH	14.15	BRACKET, FLR PNL TUN REINF (#32)	6–E2,8
97–02	Y	10425850	LH	27.75	EXTENSION, FLR PNL CTR TUN PNL FRT LWR (#41, INTERMEDIATE)	6–E2,15
97–02	Y	10425851	RH	27.75	EXTENSION, FLR PNL CTR TUN PNL FRT LWR (#41, INTERMEDIATE)	6–D2,15
97–02	Y	10250158	LH	6.65	EXTENSION, FLR PNL TUN PNL FRT UPR	6–D2,11
97–02	Y	10250159	RH	6.65	EXTENSION, FLR PNL TUN PNL FRT UPP	6–D2,11
97–02	Y	10252540	RH	44.25	EXTENSION, FLR PNL TUN PNL RR UPR (ITEM #112)	6–D8,22
97–02	Y	10438688	LH	44.25	EXTENSION, FLR PNL TUN PNL RR UPR (ITEM #112)	6–D8,22
97–98	Y	10285633	1	12.95	INSULATOR, FLR PNL FRT	7–I8,9
99–02	Y	10285633	1	12.95	INSULATOR, FLR PNL FRT (RH ONLY)	7–I8,9
97–02	Y	20464593	1	12.90	INSULATOR, FLR PNL FRT CTR (54" WIDE, SOLD BY THE FOOT, CUT AS REQ) (15.492)	7–I8,11

cardiagn.com

12.980 BAR – BOLT – BRACE – BRACKET – EXTENSION – INSULATOR – PANEL KIT – PLATE – RAIL – REINFORCEMENT – SPACER – SUPPORT, Floor Pan (Con't)

97–01	Y	12455606	RH	207.00	PANEL KIT, FLR	6–D8,1
97–02	Y	12493114	LH	207.00	PANEL KIT, FLR (#70)	6–D8,1
97–02	Y	10402723	1	3.33	PLATE, DRVR F/RST BRKT ANC (03.162)	
97–02	Y	12533430	LH	559.00	RAIL, U/B FRT SI (INCLUDES NUT 10281493)	6–D2,28
97–02	Y	12533431	RH	559.00	RAIL, U/B FRT SI (INCLUDES NUT 10281493)	6–D2,28
97–02	Y	12533432	LH	559.00	RAIL, U/B RR SI	6–D2,29
97–02	Y	12533433	RH	559.00	RAIL, U/B RR SI	6–D2,29
97–02	Y	12533434	LH	503.00	RAIL, U/B SI (CTR)	6–D2,30
97–02	Y	12533435	RH	503.00	RAIL, U/B SI (CTR)	6–D2,30
97–02	Y	10250151	1	44.50	REINFORCEMENT, FLR PNL TUN PNL (#33)	6–D14,9
97–02	Y	10278039	1	3.33	SPACER, DRVR F/RST BRKT	6–D5,41
97	Y	10253535	2	8.53	SPACER, U/B S/RL (#107) (RED)	4–G8,2
97	Y	10257863	2	8.53	SPACER, U/B S/RL (#104) (BLUE)	4–G8,2
97	Y	10257727	LH	18.40	SUPPORT, FLR PNL (POS #1)	6–D23,25
97	Y	10257728	RH	18.40	SUPPORT, FLR PNL (POS #1)	6–D23,25
97–02	Y	1027[illegible]079	2	3.33	SUPPORT, FLR PNL (UPR OTR) (POSN #29)	6–D8,25
98–01	Y	10257727	LH	18.40	SUPPORT, FLR PNL (POS #1) (IN BOARD) (#29.2)	6–D23,25
98–01	Y	1025772J	RH	18.40	SUPPORT, FLR PNL (POS #1) (IN BOARD) (#29.2)	6–D23,25

12.981 BOLT – FRAME – FRAME KIT – INSULATOR – PANEL KIT – REINFORCEMENT – RETAINER – RIVET – SPRING – SUPPORT, Rear Compartment Floor

99	Y	15714276	6	*3.43	BOLT, R/CMPT PNL (4.2X1.41X16MM HEX WSR HD 12.50 DIA TAPPING) (08.977)	
97–02	Y07	12457470	1	566.00	FRAME KIT, R/CMPT PNL	6–D8,1
98–02	Y67	10410425	1	241.00	FRAME, R/CMPT PNL	6–D17,1
99–02	Y37	10269095	1	248.00	FRAME, R/CMPT PNL	6–D23,1
97–00	Y07	20464593	1	12.90	INSULATOR, R/FLR PNL CTR (54" WIDE, SOLD BY THE FOOT, CUT AS REQ) (15.492)	7–I4,12
98–00	Y67	20464592	1	118.00	INSULATOR, R/FLR PNL CTR (15.492)	7–I12,15
99–00	Y37	20464592	1	118.00	INSULATOR, R/FLR PNL CTR (15.492)	7–I12,15
97–02	Y	12455603	1	935.00	PANEL KIT, R/CMPT FLR	6–D8,10
98–02	Y67	10264812	4	3.45	REINFORCEMENT, R/CMPT PNL FRM (12.980)	6–D17,8
98–02	Y67	10282732	1	63.00	REINFORCEMENT, R/CMPT PNL FRM	6–D17,48
99–02	Y37	10288225	1	63.00	REINFORCEMENT, R/CMPT PNL FRM	6–D23,48
98	Y67	15748479	4	*.62	RETAINER, R/CMPT PNL FRM SUPT TR (13.0MM WIDE) (YELLOW) (U–BASE) (16.575)	7–I25,10
98–99	Y67	25535427	2	*.67	RETAINER, R/CMPT PNL FRM SUPT TR (01.269)	

cardiagn.com

12.981 BOLT – FRAME – FRAME KIT – INSULATOR – PANEL KIT – REINFORCEMENT – RETAINER – RIVET – SPRING – SUPPORT, Rear Compartment Floor (Con't)

99–02	Y37–67	15748479	4	*.62	RETAINER, R/CMPT PNL FRM SUPT TR (13.0MM WIDE) (YELLOW) (U–BASE) (16.575)	7–I25,10
98–02	Y67	10407692	4	3.33	RIVET, R/CMPT PNL (FRM SUPT) (1/4"DIA) (ALUMINIUM)	6–D17,55
97	Y	6259315	5	*.61	SPRING, R/FLR COMPT DR LK CYL TUMB (SNAP IN) (10.268)	
98	Y67	10408901	RH	69.75	SUPPORT, R/CMPT PNL FRM	6–D17,41
98	Y67	10408902	LH	69.75	SUPPORT, R/CMPT PNL FRM	6–D17,41
99–02	Y37–67	10408901	RH	69.75	SUPPORT, R/CMPT PNL FRM	6–D17,41
99–02	Y37–67	10408902	LH	69.75	SUPPORT, R/CMPT PNL FRM	6–D17,41

12.986 BRACE, Body Rear End (Plastic Laminated)

97–02	Y	10263983	LH	7.80	BRACE, R/CMPT PNL (127.9X126.3X66.5)	6–E2,37
97–02	Y	10299078	RH	7.80	BRACE, R/CMPT PNL (127.9X126.3X73.1)	6–E2,37
99–02	Y	10424152	2		BRACE, R/CMPT PNL (57.0X70.0X147.0)	6–E2,37

cardiagn.com

13.090 BOLT – CLIP – CONNECTOR – GROMMET – HARNESS – RETAINER – WIRE, Body Wiring

00–02	Y	25638301	1	3.35	BOLT, BODY WRG HARN GND (W/O SENSORS) (14.865)	
97–02	Y	21020632	4	3.33	CLIP, BODY FRT WRG HARN	6–F6,4
97	Y07	21020632	11	3.33	CLIP, BODY RR WRG HARN	6–F6,4
98–02	Y	21020632	7	3.33	CLIP, BODY RR WRG HARN	6–F6,4
97	Y	21020632	11	3.33	CLIP, BODY WRG HARN	6–F6,4
98	Y67	12085481	1	18.12	CONNECTOR, INLINE–TO F/TOP HARN (BLACK) (2–WAY M W/LEADS) (02.535) (AC–DELCO #PT103)	7–D8,42
98–00	Y67	12125621	1	15.46	CONNECTOR, INLINE–TO F/TOP HARN (2–WAY F) (W/LEADS) (12.243) (AC–DELCO #PT533)	7–D8,42
01–02	YY67	12125621	1	15.46	CONNECTOR, INLINE–TO F/TOP HARN (2–WAY F) (W/LEADS) (12.243) (AC–DELCO #PT533)	7–D8,42
97–02	Y	10412644	2	8.81	GROMMET, S/D WRG (LH & RH)	5–H12,7
97–98	Y07	12189550	1	244.62	HARNESS, BODY FRT WRG	5–I4,12
98	Y67 SPEAKER SYSTEM 6 (UZ6)	12189958	1	244.62	HARNESS, BODY FRT WRG	5–I4,12
99–00	Y07 (EXC MULTIPLE CD PLYR (U1S)	12189597	1	244.62	HARNESS, BODY FRT WRG	5–I4,12
99–00	Y07 MULTIPLE CD PLYR (U1S)	12189889	1	244.62	HARNESS, BODY FRT WRG	5–I4,12
99–00	Y37 MULTIPLE CD PLYR (U1S)	12163772	1	244.62	HARNESS, BODY FRT WRG	5–I4,12
99–00	Y37 (EXC MULTIPLE CD PLYR (U1S)	12189595	1	510.00	HARNESS, BODY FRT WRG	5–I4,12
99–00	Y67 (EXC MULTIPLE CD PLYR (U1S)	12189599	1	244.62	HARNESS, BODY FRT WRG	5–I4,12
99–00	Y67 MULTIPLE CD PLYR (U1S)	12189962	1	244.62	HARNESS, BODY FRT WRG	5–I4,12
01–02	YY07 SPEAKER SYSTEM 6 (UZ6). (EXC MULTIPLE CD PLYR (U1S)	15329382	1		HARNESS, BODY FRT WRG	5–I4,12
01–02	YY07 SPEAKER SYSTEM 6 (UZ6), MULTIPLE CD PLYR (U1S)	15329383	1	244.62	HARNESS, BODY FRT WRG	5–I4,12
01–02	YY37	15329378	1		HARNESS, BODY FRT WRG	5–I4,12
01–02	YY67 SPEAKER SYSTEM 6 (UZ6), (EXC MULTIPLE CD PLYR (U1S)	15329386	1	244.62	HARNESS, BODY FRT WRG	5–I4,12
01–02	YY67 SPEAKER SYSTEM 6 (UZ6), MULTIPLE CD PLYR (U1S)	15329387	1	244.62	HARNESS, BODY FRT WRG	5–I4,12
97–02	Y07 (EXC TAIL & S/LP (T89) (EXPORT), SPECIAL TAIL & S/LP (T93)	12130411	1	251.96	HARNESS, BODY RR WRG	2–H2,1
98–99	Y67 (EXC TAIL & S/LP (T89) (EXPORT), SPECIAL TAIL & S/LP (T93)	12189532	1	526.79	HARNESS, BODY RR WRG	2–H2,1
99	Y37 (EXC TAIL & S/LP (T89) (EXPORT), SPECIAL TAIL & S/LP (T93)	12189532	1	526.79	HARNESS, BODY RR WRG	2–H2,1
00–02	Y07 SPECIAL TAIL & S/LP (T93), (EXC TAIL & S/LP (T89) (EXPORT)	12189885	1	526.79	HARNESS, BODY RR WRG	2–H2,1

cardiagn.com

13.090 BOLT – CLIP – CONNECTOR – GROMMET – HARNESS – RETAINER – WIRE, Body Wiring (Con't)

00–02	Y37–67 (EXC TAIL & S/LP (T89) (EXPORT), SPECIAL TAIL & S/LP (T93)	12189532	1	526.79	HARNESS, BODY RR WRG	2–H2,1
00–02	Y37–67 SPECIAL TAIL & S/LP (T93), (EXC TAIL & S/LP (T89) (EXPORT)	12189534	1	526.79	HARNESS, BODY RR WRG	2–H2,1
97–98	Y CONVENIENCE PKG (AAB), MAN RECL FRT BKT ST, DELUXE (AR9)	10410580	1	66.23	HARNESS, D/SEAT ADJR WRG .	7–F7,31
97	Y07 MAN RECL FRT BKT ST, DELUXE (AR9), (EXC CONVENIENCE PKG (AAB)	10410691	1	66.23	HARNESS, D/SEAT ADJR WRG .	7–F7,31
98–00	Y07–67 MAN RECL FRT BKT ST, DELUXE (AR9), (EXC CONVENIENCE PKG (AAB)	10410691	1	66.23	HARNESS, D/SEAT ADJR WRG .	7–F7,31
99–00	Y07–67 CONVENIENCE PKG (AAB), MAN RECL FRT BKT ST, DELUXE (AR9), (EXC T&T WHL (N37)	10410580	1	66.23	HARNESS, D/SEAT ADJR WRG .	7–F7,31
99–00	Y07–67 CONVENIENCE PKG (AAB), MAN RECL FRT BKT ST, DELUXE (AR9), T&T WHL (N37)	12455471	1	66.23	HARNESS, D/SEAT ADJR WRG .	7–F7,31
99–00	Y37 6–WAY PWR D/SEAT ADJR (AG1), MAN RECL FRT BKT ST, DELUXE (AR9), (EXC CONVENIENCE PKG (AAB)	10410691	1	66.23	HARNESS, D/SEAT ADJR WRG .	7–F7,31
01–02	Y07–67 MAN RECL FRT BKT ST, DELUXE (AR9)	10410691	1	66.23	HARNESS, D/SEAT ADJR WRG .	7–F7,31
01	Y37 CONVENIENCE PKG (AAB), MAN RECL FRT BKT ST, DELUXE (AR9)	10410580	1	66.23	HARNESS, D/SEAT ADJR WRG .	7–F7,31
01–02	Y37 MAN RECL FRT BKT ST, DELUXE (AR9), (EXC CONVENIENCE PKG (AAB)	10410691	1	66.23	HARNESS, D/SEAT ADJR WRG .	7–F7,31
02	YY37 CONVENIENCE PKG (AAB), MAN RECL FRT BKT ST, DELUXE (AR9)	10410580	1	66.23	HARNESS, D/SEAT ADJR WRG .	7–F7,31
01–02	Y (EXC I/S RR VIEW MIR (DD8)	12189953	1		HARNESS, DM LP & I/S RR VIEW MIR RDG LP WRG	
97–00	Y	12163314	LH	263.90	HARNESS, DR LK & O/S RRVIEW MIR MEMORY INTERFACE MDL WRG	5–H12,8
97–99	Y	12163315	RH	263.90	HARNESS, DR LK & O/S RRVIEW MIR MEMORY INTERFACE MDL WRG	5–H12,8
00–02	Y SPECIAL TAIL & S/LP (T93)	12163315	RH	263.90	HARNESS, DR LK & O/S RRVIEW MIR MEMORY INTERFACE MDL WRG	5–H12,8
01–02	Y ELEC R/CON HTD MIR (DL8)	12163314	LH	263.90	HARNESS, DR LK & O/S RRVIEW MIR MEMORY INTERFACE MDL WRG	5–H12,8
01–02	Y C/S ELEC R/CON MIR (DD0)	12189556	LH	263.90	HARNESS, DR LK & O/S RRVIEW MIR MEMORY INTERFACE MDL WRG	5–H12,8
01–02	Y EUROPEAN PROVISIONS (VD1) (EXPORT)	10441963	1		HARNESS, KEYLESS ENTRY WRG (ELEMENT)	5–H24,5

cardiagn.com

13.090 BOLT – CLIP – CONNECTOR – GROMMET – HARNESS – RETAINER – WIRE, Body Wiring (Con't)

97	Y07 6–WAY PWR P/SEAT ADJR (AG2), MAN RECL FRT BKT ST, DELUXE (AR9)	10410692	1	53.81	HARNESS, P/SEAT ADJR WRG . .	7–F7,31
98–01	Y07–67 6–WAY PWR P/SEAT ADJR (AG2), MAN RECL FRT BKT ST, DELUXE (AR9)	10410692	1	53.81	HARNESS, P/SEAT ADJR WRG . .	7–F7,31
99–00	Y	12020833	1	*.76	RETAINER, BODY WRG HARN CONN (GRAY) (PUSH–IN) (1" LONG) (02.559)	
97–02	Y	21020632	6	3.33	RETAINER, DR WRG HARN	6–F6,4
98	Y67	12130419	1	59.12	WIRE, CONV TOP	7–D8,48
	*EXPORT**********EXPORT**********EXPORT**********EXPORT**********EXPORT*					
97–01	Y07 TAIL & S/LP (T89) (EXPORT), (EXC SPECIAL TAIL & S/LP (T93)	12130413	1	244.62	HARNESS, BODY RR WRG	2–H2,1
97–99	Y07 SPECIAL TAIL & S/LP (T93), (EXC TAIL & S/LP (T89) (EXPORT)	12189885	1	526.79	HARNESS, BODY RR WRG	2–H2,1
98	Y67 TAIL & S/LP (T89) (EXPORT), (EXC SPECIAL TAIL & S/LP (T93)	12189533	1	526.79	HARNESS, BODY RR WRG	2–H2,1
98–99	Y67 SPECIAL TAIL & S/LP (T93), (EXC TAIL & S/LP (T89) (EXPORT)	12189534	1	526.79	HARNESS, BODY RR WRG	2–H2,1
99	Y37 SPECIAL TAIL & S/LP (T93), (EXC TAIL & S/LP (T89) (EXPORT)	12189534	1	526.79	HARNESS, BODY RR WRG	2–H2,1
99–02	Y37–67 TAIL & S/LP (T89) (EXPORT), (EXC SPECIAL TAIL & S/LP (T93)	12189533	1	526.79	HARNESS, BODY RR WRG	2–H2,1
99–02	Y EUROPEAN PROVISIONS (VD1) (EXPORT)	12020833	1	*.76	RETAINER, BODY FRT WRG HARN CONN (GRAY) (PUSH–IN) (1" LONG) (02.559)	

13.095 RELAY, Body Wiring

97–02	Y	12088567	1	16.45	RELAY, C/LP (GRAY) (4–WAY) (09.277) (AC–DELCO #15–8571)	2–G10,40
98–00	Y67	12088567	1	16.45	RELAY, F/TOP (GRAY) (4–WAY) (09.277) (AC–DELCO #15–8571)	2–G10,40

13.100 CONNECTOR, Body Wiring

97–02	Y	12085536	1	29.85	CONNECTOR, INLINE–TO BODY HARN (BLACK) (4–WAY M) (W/LEADS) (02.535) (AC–DELCO #PT144)	3–G18,24
97	Y	12101822	1	33.42	CONNECTOR, INLINE–TO BODY HARN (GRAY) (8–WAY F) (W/LEADS) (02.535) (AC–DELCO #PT214)	5–E20,8
97	Y	12101876	1	27.54	CONNECTOR, INLINE–TO BODY HARN (6–WAY M) (W/LEADS) (02.535) (AC–DELCO #PT267)	3–G6,10
97	Y	15305888	1	30.36	CONNECTOR, INLINE–TO BODY HARN (6–WAY F W/LEADS) (13.090) (AC–DELCO #PT1032) .	3–G6,10

cardiagn.com

13.100 CONNECTOR, Body Wiring (Con't)

01–02	Y EUROPEAN PROVISIONS (VD1) (EXPORT)	12047817	1	1.73	CONNECTOR, INLINE–TO BODY HARN (BLUE) (4–WAY M) (W/O LEADS) (09.656)	3–G18,24
01–02	Y	12117271	1	59.43	CONNECTOR, INLINE–TO BODY HARN (WHITE) (8–WAY F W/LEADS) (02.535) (AC–DELCO #PT444)	3–J13,6
02	YY67 4–SPD A/TRANS (M30), A/C FRT AUTO/AUX CONT (CJ2), T&T WHL (N37), (EXC TAIL & S/LP (T89) (EXPORT)	12085536	1	29.85	CONNECTOR, INLINE–TO BODY HARN (BLACK) (4–WAY M) (W/LEADS) (02.535) (AC–DELCO #PT144)	3–G18,24
97–02	Y	12103188	1	1.89	CONNECTOR, INLINE–TO DR HARN (10–WAY MALE M/P 150 W/O LEADS. (BLUE) .) (BLUE) (10 -WAY M. W/O LEADS) (02.530)	
97–02	Y	15305872	1	33.15	CONNECTOR, INLINE–TO DR HARN (RR) (BLACK) (6–WAY M W/LEADS) (AC–DELCO #PT1013)	
99	Y	12101827	1	37.50	CONNECTOR, INLINE–TO DR HARN (8–WAY M) (W/LEADS) (02.535) (AC–DELCO #PT219)	5–E8,8
02	YY67 4–SPD A/TRANS (M30), A/C FRT AUTO/AUX CONT (CJ2), T&T WHL (N37), (EXC TAIL & S/LP (T89) (EXPORT)	12103188	1	1.89	CONNECTOR, INLINE–TO DR HARN (10–WAY MALE M/P 150 W/O LEADS. (BLUE)) (BLUE) (10–WAY M, W/O LEADS) (02.530)	
02	YY67 4–SPD A/TRANS (M30), A/C FRT AUTO/AUX CONT (CJ2), T&T WHL (N37), (EXC TAIL & S/LP (T89) (EXPORT)	15305872	1	33.15	CONNECTOR, INLINE–TO DR HARN (RR) (BLACK) (6–WAY M W/LEADS) (AC–DELCO #PT1013)	
97–02	Y	12101855	2	20.56	CONNECTOR, INLINE–TO DR LK ACTR MOT (2–WAY F) (W/LEADS) (W/SEAL) (02.535) (AC–DELCO #PT247)	5–H12,8
97–02	Y	12085536	1	29.85	CONNECTOR, INLINE–TO O/S RR VIEW MIR (BLACK) (4–WAY M) (W/LEADS) (02.535) (AC–DELCO #PT144)	3–G18,24
97–02	Y	12101827	2	37.50	CONNECTOR, INLINE–TO O/S RR VIEW MIR (8–WAY M) (W/LEADS) (02.535) (AC–DELCO #PT219)	5–E8,8
97–02	Y	15305872	1	33.15	CONNECTOR, INLINE–TO PWR ST (RR) (BLACK) (6–WAY M W/LEADS) (AC–DELCO #PT1013)	
02	YY67 4–SPD A/TRANS (M30), A/C FRT AUTO/AUX CONT (CJ2), T&T WHL (N37), (EXC TAIL & S/LP (T89) (EXPORT)	15305872	1	33.15	CONNECTOR, INLINE–TO PWR ST (RR) (BLACK) (6–WAY M W/LEADS) (AC–DELCO #PT1013)	
97–02	Y	12101825	2	18.01	CONNECTOR, INLINE–TO R/CMPT LID LAT REL SOL (GRAY) (2–WAY F W/LEADS) (INDEX TAB CTR CAVITY A&B) (02.535) (AC–DELCO #PT217)	

cardiagn.com

13.100 CONNECTOR, Body Wiring (Con't)

97–02	Y	12117271	1	59.43	CONNECTOR, INLINE–TO RR BODY HARN (WHITE) (8–WAY F W/LEADS) (02.535) (AC–DELCO #PT444)	3–J13,6
97–02	Y	12085481	2	18.12	CONNECTOR, INLINE–TO S/S MIR LP (BLACK) (2–WAY M W/LEADS) (02.535) (AC–DELCO #PT103)	5–E20,8
99	Y	12101822	1	33.42	CONNECTOR, INLINE–TO S/S MIR LP (GRAY) (8–WAY F) (W/LEADS) (02.535) (AC–DELCO #PT214)	5–E20,8
99	Y07–67	12101827	1	37.50	CONNECTOR, INLINE–TO S/S MIR LP (8–WAY M) (W/LEADS) (02.535) (AC–DELCO #PT219)	5–E8,8
01–02	Y	12101822	1	33.42	CONNECTOR, INLINE–TO S/S MIR LP (GRAY) (8–WAY F) (W/LEADS) (02.535) (AC–DELCO #PT214)	5–E20,8
97	Y	12085481	2	18.12	CONNECTOR, INLINE–TO ST BELT SW (BLACK) (2–WAY M W/LEADS) (02.535) (AC–DELCO #PT103)	5–E20,8
97–02	Y	12126487	1	38.52	CONNECTOR, SW–DR AJAR IND (4–WAY F) (W/LEADS) (02.383) (AC–DELCO #PT757)	2–F15,18

13.346 NUT – TOP – WEATHERSTRIP, Convertible and Hard Top

97	Y	10237960	6	.46	NUT, R/TOP BOLT GDE (M6X1.0) (10.512)	5–D4,4
98–02	Y	10410398	6	*.51	NUT, R/TOP BOLT GDE (M6X1.0 ITR "D" THD) (10.512)	5–D4,4
98–00	Y67 CONV ROOF (C05), (41T)	10445454	1	3177.00	TOP, FLDG (BLACK)	7–D8,24
01–02	Y67 CONV ROOF (C05), (41T)	10306244	1	3177.00	TOP, FLDG (BLACK)	7–D18,24
01–02	Y67 CONV ROOF (C05), VINYL TOP, DK ANTELOPE MET (67T)	10306245	1	3177.00	TOP, FLDG (METALLIC)	7–D18,24
01–02	Y67 CONV ROOF (C05), (16T)	10306246	1	3177.00	TOP, FLDG (WHITE)	7–D18,24
98–02	Y67 CONV ROOF (C05)	10446851	1	83.00	WEATHERSTRIP, F/TOP RR	5–D14,1

13.347 COVER – FASTENER KIT – PANEL – RETAINER KIT – SHIELD – STRAP, Convertible Top Cover

98–00	Y67 CONV ROOF (C05), (41T)	12369653	1	1141.00	COVER, F/TOP (BLACK) (INCLS BACKLITE) (13.346)	7–D4,6
98–02	Y67 CONV ROOF (C05), (16T)	12369654	1	1141.00	COVER, F/TOP (WHITE)	7–D4,6
98–00	Y67 CONV ROOF (C05), VINYL TOP, DK ANTELOPE MET (67T)	12369655	1	1141.00	COVER, F/TOP (LT OAK)	7–D4,6
01–02	YY67 CONV ROOF (C05), (41T)	88950135	1	1141.00	COVER, F/TOP (CLOTH MATERIAL AND INCLUDES THE WINDOW)	7–D4,6
01–02	YY67 CONV ROOF (C05), VINYL TOP, DK ANTELOPE MET (67T)	88950136	1	1141.00	COVER, F/TOP (CLOTH MATERIAL AND INCLUDES THE WINDOW)	7–D4,6
98–02	Y67 CONV ROOF (C05)	12369656	1	32.75	FASTENER KIT, F/TOP CVR	7–D4,6
98–02	Y67 CONV ROOF (C05)	12369659	1	16.45	FASTENER KIT, F/TOP CVR SI TENS CBL (14.102)	7–D4,20
98–02	Y67 CONV ROOF (C05)	12369652	1	36.25	FASTENER KIT, F/TOP HDLNG T/PNL CVR	7–D4,28
98–02	Y67 CONV ROOF (C05)	12369650	1	21.90	FASTENER KIT, F/TOP STOW COMPT LID GLARE SHLD	7–D4,6

cardiagn.com

13.347 COVER – FASTENER KIT – PANEL – RETAINER KIT – SHIELD – STRAP, Convertible Top Cover (Con't)

98–02	Y67 CONV ROOF (C05)	12369651	1	1103.00	PANEL, F/TOP HDLNG TR (CVR) (14.640)	7–D4,28
01–02	YY67 CONV ROOF (C05)	88950134	1	1103.00	PANEL, F/TOP HDLNG TR	7–D4,28
98–02	YY67 CONV ROOF (C05)	88952099	1		RETAINER KIT, F/TOP CVR #1 BOW (TACKING STRIP)	
98–02	YY67 CONV ROOF (C05)	88952100	1		RETAINER KIT, F/TOP CVR #5 BOW (TACKING STRIP)	
98–02	Y67 CONV ROOF (C05)	12369649	1	274.00	SHIELD, F/TOP STOW COMPT LID GLARE	7–D4,6
98–02	Y67 CONV ROOF (C05)	12369663	RH	131.00	STRAP, F/TOP FRM TENS	7–D4,20
98–02	Y67 CONV ROOF (C05)	12369673	LH	131.00	STRAP, F/TOP FRM TENS	7–D4,20

cardiagn.com

21.552A PANEL PKG – WINDOW PKG, Roof (Production)

97–02	Y07 CLEAR ROOF PANEL (CC3), DUAL REMOVEABLE ROOF (C2L) .	12370935	1	1192.00	WINDOW PKG, RF LIFT OFF (BLUE) (INSTALL .25) (TRANSPARENT) (12.810) .....

2.333 BRACKET – INSULATOR – RETAINER – SHIELD – SUPPORT – TRAY, Battery

97–02	Y	10400830	1	18.35	SUPPORT, BAT TRAY .....
97–02	Y	10268430	1	5.70	TRAY, BAT (W/SUPT) .....

2.483 BLOCK – BOLT – BRACKET – CONNECTOR – COVER – LABEL – PLATE – PULLER – SHIELD – STUD, Main Wiring Junction and Fuse Block

97	Y	12102616	1	14.89	CONNECTOR, BLK–ACSRY WRG JUNC (2–WAY F) (W/LEADS) (02.630) (AC–DELCO #PT303) .... .
97–98	Y	12128486	1	61.98	CONNECTOR, BLK–ACSRY WRG JUNC (3–WAY F FLEX LOCK W/LEADS) (02.694) (AC–DELCO #PT756) .....
97–98	Y	12129490	1	2.35	CONNECTOR, BLK–ACSRY WRG JUNC (3–WAY M, W/O LEADS) (CLIP SLOT) (13.100) ....
02	Y CHASSIS, REALTIME DAMPING (F45)	16306928	1	33.42	CONNECTOR, BLK–ACSRY WRG JUNC (BLACK) (2–WAY F, MAXI FUSE, W/LEADS) (02.630) (AC–DELCO #PT1187) . ...
99–00	Y	16303514	1	5.53	CONNECTOR, BLK–ENG WRG JUNC (BROWN) (68–WAY F M/P 280 FLYLK, W/O LEADS) (02.630) .....
99	Y37 (EXC ACTIVE BRAKE CTL (JL4), P/S (VARIABLE) (NV7), FRT FOG LP (TU6)	16303512	1	5.53	CONNECTOR, BLK–ENG WRG JUNC (GRAY) (68–WAY F W/O LEADS) (02.630) .. ..
00	Y	16303512	1	5.53	CONNECTOR, BLK–ENG WRG JUNC (GRAY) (68–WAY F W/O LEADS) (02.630) . . .
00	Y	16303513	1	5.53	CONNECTOR, BLK–ENG WRG JUNC (FRT) (BLACK) (68–WAY F M/P 280 FLXLK W/O LEADS) (02.630)
97–00	Y .	12177206	1	5.71	CONNECTOR, BLK–I/P WRG JUNC (BLACK) (68–WAY F, M/P 280 FLXLK, W/O LEADS) (02.630)
97–00	Y	12177207	1	5.71	CONNECTOR, BLK–I/P WRG JUNC (GRAY) (68–WAY F, M/P 280 FLXLK, W/O LEADS) (02.630)
99–00	Y	16306986	1	20.01	CONNECTOR, BLK–I/P WRG JUNC (GRAY) (2–WAY F MAXI FUSE CONN W/LEADS) (02.630) (AC–DELCO #PT1028)
99–00	Y	16306920	1	33.42	CONNECTOR, BLK–I/P WRG JUNC (GREEN) (2–WAY F W/LEADS) (02.630) (AC–DELCO #PT1180)
99–00	Y	16306981	1	20.01	CONNECTOR, BLK–I/P WRG JUNC (2–WAY F MAXI FUSE, W/LEADS) (02.630) (AC–DELCO #PT1190)
00	Y	12177206	1	5.71	CONNECTOR, BLK–I/P WRG JUNC (68–WAY F M/P 280 FLXLK W/O LEADS, GRAY) (02.630)
00–02	Y	16306920	1	33.42	CONNECTOR, BLK–I/P WRG JUNC (BLACK) (2–WAY F MAXI FUSE W/LEADS) (02.630) (AC–DELCO #PT1187)

cardiagn.com

2.483 BLOCK – BOLT – BRACKET – CONNECTOR – COVER – LABEL – PLATE – PULLER – SHIELD – STUD, Main Wiring Junction and Fuse Block(Con't)

97–99	Y	12126446	2	60.39	CONNECTOR, FUSE–AUTO (2–WAY F, W/LEADS & COVER) (02.535)
02	Y	12126446	2	60.39	CONNECTOR, FUSE–AUTO (2–WAY F, W/LEADS & COVER) (02.535)
97–99	Y	12085491	8	17.40	CONNECTOR, INJR–FUEL (2–WAY F) (W/LEADS) (02.535) (AC–DELCO #PT113)
00–02	Y 5.7G (LS1), 6–SPD M/TRANS (MM6), 4–SPD A/TRANS (M30)	12085491	8	17.40	CONNECTOR, INJR–FUEL (2–WAY F) (W/LEADS) (02.535) (AC–DELCO #PT113)
01–02	Y 5.7S (LS6)	12085491	8	17.40	CONNECTOR, INJR–FUEL (2–WAY F) (W/LEADS) (02.535) (AC–DELCO #PT113)
97	Y07 (EXC SIG & MKR LP (T90) (EXPORT)	15310540	1	DISCON	LABEL, ENG WRG HARN ACSRY RLY & FUSE IDENT
98–99	Y	12104082	1	.78	LABEL, ENG WRG HARN ACSRY RLY & FUSE IDENT
00–02	Y	15328703	1	8.50	LABEL, ENG WRG HARN ACSRY RLY & FUSE IDENT
97	Y	12176907	1	.78	LABEL, FUSE BLK IDENT
98	Y	12104083	1	.78	LABEL, FUSE BLK IDENT
99–02	Y	15310414	1	.78	LABEL, FUSE BLK IDENT
97	Y	10135646	2	3.33	PLATE, MULTIUSE RLY BRKT STUD (M6 X 1 X 24) (01.271)
97–02	Y	10402723	1	3.33	PLATE, MULTIUSE RLY BRKT STUD (BRACKET REPLACES CENTER–MOST OF THE THREE SIMILAR BRACKETS ON THE PASSENGER SIDE OF DASHBOARD & BOTH BRACKETS ON DRIVER SIDE OF DASHBOARD) (03.162)
97–00	Y	14058658	1	3.45	PLATE, MULTIUSE RLY BRKT STUD (BRACKET REPLACES THE TWO OUTBOARD OF THE THREE SIMILAR BRACKETS ON THE PASSENGER SIDE OF DASHBOARD) (12 986)
01–02	Y	14058658	2	3.45	PLATE, MULTIUSE RLY BRKT STUD (12 986)
97–02	Y	10135646	2	3.33	STUD, ENG WRG HARN J/BLK (M6 X 1 X 24) (01 271)
98–02	Y	10135646	2	3.33	STUD, MULTIUSE RLY BRKT (ANC PLT) (M6 X 1 X 24) (01 271)
	EXPORT	*EXPORT*	*EXPORT*	*EXPORT*	*EXPORT*
97	Y07 SIG & MKR LP (T90) (EXPORT)	12176702	1	1.00	LABEL, ENG WRG HARN ACSRY RLY & FUSE IDENT

2.550 BOLT – CAP – CLIP – COVER – GASKET – RETAINER – SHIELD – SPACER – STRAP – STUD Chassis, Engine Wiring Harness

97–00	Y (EXC LEADED FUEL M6 EXPORT (NM8)	12558073	6	3.33	CLIP OXY SEN LEAD
00–02	Y	12561400	1	3.33	CLIP BLCD AC INJN PMP WRG HARN
97–98	Y	26061064	1	6.66	SPACER DA WRG HARN CDT
99–02	Y07 87 (EXC T&T V8 – NR17)	26061064	1	6.66	SPACER DA WRG HARN CDT
99–02	Y37	26061064	1	6.66	SPACER, DA WRG HARN CDT
97–00	Y	10276076	6	.20	STUD WRG HARN GND
99–00	Y (1ST DSN)	10276076	6	.20	STUD WRG HARN GND (1ST DSN STUD M6X1X25 FINISH COPPER FLASH 2ND DSN DE18162)

cardiagn.com

2.559 BOLT – CAP – CLIP – COVER – GASKET – RETAINER – SHIELD – SPACER – STRAP – STUD, Chassis/Engine Wiring Harness(Con't)

99–00	Y (2ND DES)	11518182	6		STUD, WRG HARN GND (2ND DSN STUD–WELD M6X1X25, FINISH 6280, 1ST DSN 10278878)
01–02	YY37–67 (1ST DES)	10278878	6	.29	STUD, WRG HARN GND (1ST DSN STUD M6X1X25, FINISH COPPER FLASH, 2ND DSN 11518182)
01–02	YY37–67 (2ND DES)	11518182	6		STUD, WRG HARN GND (2ND DSN STUD–WELD M6X1X25, FINISH 6280, 1ST DSN 10278878)
	*EXPORT***************EXPORT***************EXPORT***************EXPORT***************EXPORT*				
97–98	Y LEADED FUEL EMIS EXPORT (NM8)	12191286	2	3.33	CAP, OXY SEN WRG HARN CONN (2–WAY) (W/O LEADS)
99–02	Y LEADED FUEL EXPORT EMIS (NM2)	12191286	2	3.33	CAP, OXY SEN WRG HARN CONN (2–WAY) (W/O LEADS)
99	Y JAPANESE EMISSION (NA3), EUROPEAN EMISSION (NA7), CALIF EMIS, TIER 1 (NB6), FED EMIS SYS (NF2)	12555072	6	3.33	CLIP, OXY SEN LEAD
00	Y JAPANESE EMISSION (NA3), EUROPEAN EMISSION (NA7), CALIF EMIS LEV (NC1), FED EMIS SYS (NF2)	12555072	6	3.33	CLIP, OXY SEN LEAD
01–02	Y JAPANESE EMISSION (NA3), CALIF EMIS LEV (NC1), FEDERAL EMIS NLEV (NF7), EMISSION SYSTEM, EEC 00 (NT3)	12555072	6	3.33	CLIP, OXY SEN LEAD
97–98	Y LEADED FUEL EMIS EXPORT (NM8)	12124742	2	8.09	COVER, ENG WRG HARN
99–02	Y LEADED FUEL EXPORT EMIS (NM2)	12124742	2	8.09	COVER, ENG WRG HARN

3.003 HOSE – HOUSING, Fuel Tank Filler

97–02	Y	10401407	1	0.00	HOUSING, F/TNK FIL PIPE (POCKET)

3.130 BRACKET – CANISTER – CONNECTOR – COVER – RETAINER – VALVE, Fuel Tank Evaporator Control (Engine End)

97–02	Y	10287707	1	0.00	BRACKET, EVAP EMIS CNSTR
97–02	Y 6.7G (LS1)	12560884	1	0.00	BRACKET, EVAP EMIS CNSTR PURGE SOL VLV
00–02	Y	10277833	1	4.97	BRACKET, EVAP EMIS CNSTR PURGE SOL VLV
01–02	Y 6.7S (LS6)	12560884	1	0.00	BRACKET, EVAP EMIS CNSTR PURGE SOL VLV
00	Y	24874755	1	22.00	VALVE, EVAP EMIS CNSTR CONT
97–02	Y 6.7G (LS1)	01007278	1	17.04	VALVE, EVAP EMIS CNSTR PURGE SOL (AC DELCO #214–641)
01–02	Y 6.7S (LS6)	01007278	1	17.04	VALVE, EVAP EMIS CNSTR PURGE SOL (AC DELCO #214–641)
00–02	Y	10203064	1	22.00	VALVE, EVAP EMIS CNSTR VENT SOL

3.148 CLAMP – CLIP – HARNESS – HOSE – TUBE, Early Fuel Evaporation

00	Y	10281421	1	3.50	CLIP, EVAP EMIS HOSE (04 786)
97–00	Y 5.7G (LS1) 6 SPD M/TRANS (MM6)	12557008	1	41.36	HARNESS, EVAP EMIS CNSTR PURGE
97–00	Y 5.7G (LS1) 4 SPD A/TRANS (MJ0)	12557008	1	41.36	HARNESS, EVAP EMIS CNSTR PURGE
97–02	Y 5.7G (LS1)	12552222	1	6.50	TUBE, EVAP EMIS CNSTR PURGE (FROM VALVE TO THROTTLE BODY)

cardiagn.com

3.145 CLAMP – CLIP – HARNESS – HOSE – TUBE, Early Fuel Evaporation(Con't)

99–02	Y 5.7G (LS1)	12562563	1	16.64	TUBE, EVAP EMIS CNSTR PURGE (FUEL FEED PIPE ASM TO ENG PURGE VALVE) (INCLUDES SERVICE PORT)
01–02	Y 5.7S (LS6)	12562222	1	6.50	TUBE, EVAP EMIS CNSTR PURGE (FROM VALVE TO THROTTLE BODY)
01–02	Y 5.7S (LS6)	12562563	1	16.64	TUBE, EVAP EMIS CNSTR PURGE (FUEL FEED PIPE ASM TO ENG PURGE VALVE) (INCLUDES SERVICE PORT)

3.162 CLAMP – CLIP – PLATE – RETAINER – SEAL – STUD, Fuel Line

97–02	Y	10402723	2	3.33	PLATE, FUEL FEED PIPE CLIP STUD
98–00	Y	10416038	2	3.45	SEAL, FUEL FEED PIPE CLIP STUD PLT (15.222)
97–02	Y	10267731	3	3.33	STUD, FUEL FEED & RTN PIPE CLIP

3.602 BOLT – BRACKET – SHIELD, Exhaust Manifold

01–02	Y 5.7G (LS1)	10228350	5	3.75	BOLT, EXH MANIF H/SHLD (M6X12)
01–02	Y 5.7S (LS6)	10228350	5	3.75	BOLT, EXH MANIF H/SHLD (M6X12)
97–02	Y	10296769	6	3.75	BRACKET, EXH MUFF H/SHLD
01–02	Y 5.7G (LS1)	12568317	RH	24.45	SHIELD, EXH MANIF HT
01–02	Y 5.7S (LS6)	12568317	RH	24.45	SHIELD, EXH MANIF HT
01–02	Y 5.7G (LS1)	12569065	LH	17.90	SHIELD, EXH MANIF HT
01–02	Y 5.7S (LS6)	12569065	LH	17.90	SHIELD, EXH MANIF HT

3.690 SHIELD, Catalytic Converter

97–02	Y	10259597	LH	6.70	SHIELD, CTLTC CONV HT
97–02	Y	10259598	RH	6.70	SHIELD, CTLTC CONV HT

4.047 BRACKET – CABLE – RETAINER, Transmission Shift Control Cable [AUTOMATIC]

97–02	Y 4-SPD A/TRANS (M30)	10277347	1	4.55	BRACKET, A/TRNS RANGE SEL LVR CBL (TO FRONT)
97–02	Y 4-SPD A/TRANS (M30)	12551457	1	4.55	BRACKET, A/TRNS RANGE SEL LVR CBL (TO REAR)

4.655 BOLT – BOOT – BRACKET – DUCT – HARDWARE KIT – PIN – SCOOP – SEAL – WASHER, Wheel Brake Cylinder/Caliper

97–02	Y	10295976	LH	21.35	DUCT, FRT BRK CLPR CLG (POSN #1)
97–02	Y	10295977	RH	21.35	DUCT, FRT BRK CLPR CLG (POSN #2)
01–02	Y37 ANTILOCK DISC BRK (JL9)	10425976	LH		DUCT, RR BRK CLPR CLG
01–02	Y37 ANTILOCK DISC BRK (JL9)	10425977	RH		DUCT, RR BRK CLPR CLG (04.655)
01–02	Y37	10440860	RH	73.60	SCOOP, RR BRK CLPR CLG AIR
01–02	Y37	10440860	LH	73.60	SCOOP, RR BRK CLPR CLG AIR

4.785 BRACKET – CLIP – PLATE – RETAINER – SEAL, Parking Brake Cable

97–02	Y	10262040	LH	3.60	BRACKET, PARK BRK CBL
97–02	Y	10262050	RH	3.60	BRACKET, PARK BRK CBL
97–02	Y	10255630	1	4.40	BRACKET, PARK BRK CBL EQLZR
97–02	Y	10281421	2	3.50	CLIP, PARK BRK RR CBL
97–02	Y	10404603	2	1.70	PLATE, PARK BRK RR CBL CLIP STUD
98–02	Y	10416038	2	3.45	SEAL, PARK BRK RR CBL CLIP STUD PLT (15.222)

cardiagn.com

5.380 BRACKET – REINFORCEMENT, Rear Axle Control Arm

97–02	Y	10281365	LH	7.19	BRACKET, RR SUSP UPR CONT ARM (#102 FRT)
97–02	Y	10281366	RH	7.19	BRACKET, RR SUSP UPR CONT ARM (#102 FRT)
97–02	Y	10281367	LH	7.19	BRACKET, RR SUSP UPR CONT ARM (RR)
97–02	Y	10281368	RH	6.55	BRACKET, RR SUSP UPR CONT ARM (RR)
97–02	Y	10280564	2	2.73	REINFORCEMENT, RR SUSP CONT ARM BRKT

6.760 BRACKET – SHIM, Steering Column Attaching

97–02	Y	10402879	1	155.02	BRACKET, STRG COL (#52)

7.039 BOLT – BRACKET – LOCATOR – NUT – RIVET, Frame Front Cross Member

97–02	Y	10280876	4	3.45	LOCATOR, FRT C/MBR
97–02	Y	10280876	4	3.45	LOCATOR, RR C/MBR

7.068 BRACKET – HOOK – RIVET, Towing

*EXPORT**************EXPORT**************EXPORT**************EXPORT**************EXPORT*

97–02	Y FRT TOW HOOK (V76)	10281061	1	59.25	HOOK, FRT TOW
97–02	Y FRT TOW HOOK (V76)	10281062	1	59.25	HOOK, RR TOW

7.440 ACCELEROMETER – BRACKET – CONNECTOR – SENSOR, Hydraulic Suspension

98–99	Y ACTIVE BRAKE CTL (JL4)	25678101	1	110.00	ACCELEROMETER, VEH LATL
00–01	Y ACTIVE BRAKE CTL (JL4)	25697709	1	110.00	ACCELEROMETER, VEH LATL
02	Y	25697709	1	110.00	ACCELEROMETER, VEH LATL
98–02	Y ACTIVE BRAKE CTL (JL4)	10280470	1	3.40	BRACKET, VEH LATL ACCLRM
98–02	Y	12117320	1	25.03	CONNECTOR, SEN–VEH YAW (3-WAY F) (W/LEADS) (02.530) (AC–DELCO #PT1490)
02	YY67 4–SPD A/TRANS (M30), A/C FRT AUTO/AUX CONT (CJ2), T&T WHL (N37), (EXC TAIL & S/LP (T89) (EXPORT)	12117320	1	25.03	CONNECTOR, SEN–VEH YAW (3–WAY F) (W/LEADS) (02.530) (AC–DELCO #PT1490)
98–00	Y ACTIVE BRAKE CTL (JL4)	10277333	1	297.00	SENSOR, VEH YAW
01–02	Y	10277333	1	297.00	SENSOR, VEH YAW

7.450 BRACKET – BULB – CONNECTOR – COVER – KNOB – MODULE – RELAY – RETAINER – SWITCH, Electronic Control Suspension

97–02	Y CHASSIS, REALTIME DAMPING (F45)	10280844	1	6.68	BRACKET, ELEK SUSP CONT MDL
01–02	Y	12160770	1	1.02	CONNECTOR, INLINE – TO ELEK SUSP MDL (BROWN) (24–WAY F) (W/O LEADS) (MIC/PAC 100) (03 670)
01–02	Y	12160770	1	2.23	CONNECTOR, INLINE – TO ELEK SUSP MDL (BROWN) (32 WAY F, W/O LEADS, MIC/PAC 100) (03 670)
97–02	Y	12102747	1	21.73	CONNECTOR, INLINE – TO S/ABS CONT ACTR (BLACK) (2–WAY F W/LEADS) (03 670) (AC–DELCO #PT374)
97	Y	12110707	1	2.28	CONNECTOR, MDL – ELEK SUSP CONT (BLUE) (32 WAY F W/O LEADSS) (03 670)
97–02	Y	12160718	1	1.02	CONNECTOR MDL – ELEK SUSP CONT (BROWN) (24 WAY F) (W/O LEADS) (MIC/PAC 100) (03 670)

cardiagn.com

7.450 BRACKET – BULB – CONNECTOR – COVER – KNOB – MODULE – RELAY – RETAINER – SWITCH, Electronic Control Suspension(Con't)

97–00	Y	12160779	1	2.23	CONNECTOR, MDL–ELEK SUSP CONT (BROWN) (32–WAY F, W/O LEADS, MIC/PAC 100) (03.670)
01–02	Y	12126463	1	45.66	CONNECTOR, SW–ELEK SUSP (BLACK) (2–WAY F) (W/LEADS) (02.530) (AC–DELCO #PT733)
97	Y07 CHASSIS, REALTIME DAMPING (F45)	10286260	LH	9.60	COVER, ELEK SUSP CONT MDL FIN
98–00	Y07–67 CHASSIS, REALTIME DAMPING (F45)	10286260	LH	9.60	COVER, ELEK SUSP CONT MDL FIN
01–02	Y07 CHASSIS, REALTIME DAMPING (F45)	10286260	LH	9.60	COVER, ELEK SUSP CONT MDL FIN
01–02	Y67 CHASSIS, REALTIME DAMPING (F45), (19I)	10440580	1	9.45	COVER, ELEK SUSP CONT MDL FIN (BLACK)
01–02	Y67 CHASSIS, REALTIME DAMPING (F45), (92I)	10440581	1	9.45	COVER, ELEK SUSP CONT MDL FIN (PEWTER)
01–02	Y67 CHASSIS, REALTIME DAMPING (F45), (67I)	10440582	1	9.45	COVER, ELEK SUSP CONT MDL FIN (OAK)
01–02	Y67 CHASSIS, REALTIME DAMPING (F45), (70I)	10440583	1	9.45	COVER, ELEK SUSP CONT MDL FIN (RED)
97–99	Y CHASSIS, REALTIME DAMPING (F45), (EXC EUROPEAN PROVISIONS (VD1) (EXPORT)	09360581	1	934.00	MODULE, ELEK SUSP CONT (RTD MODULE/FAST SHOCK) (AC–DELCO #9360581)
00–02	YY07–67 CHASSIS, REALTIME DAMPING (F45)	09366711	1	695.00	MODULE, ELEK SUSP CONT
97–98	Y	12088567	1	16.45	RELAY, ROAD SENSING SUSP DPNR (GRAY) (4–WAY) (09.277) (AC–DELCO #15–8571)
97–02	Y07 CHASSIS, REALTIME DAMPING (F45)	10267772	1	3.45	RETAINER, ELEC SUSP CONT MDL FIN CVR (14.640)
98–01	Y67 CHASSIS, REALTIME DAMPING (F45)	10267772	1	3.45	RETAINER, ELEC SUSP CONT MDL FIN CVR (14.640)
02	Y67 CHASSIS, REALTIME DAMPING (F45)	10267772	1	3.45	RETAINER, ELEC SUSP CONT MDL FIN CVR (14.640)
	*EXPORT*****EXPORT*****EXPORT*****EXPORT*****EXPORT*				
98–99	Y07–67 CHASSIS, REALTIME DAMPING (F45), EUROPEAN PROVISIONS (VD1) (EXPORT)	09360571	1	695.00	MODULE, ELEK SUSP CONT (RTD MODULE/FAST SHOCK)

7.831 BAR – BOLT – FASCIA – NUT – PLATE – REINFORCEMENT – RETAINER – RIVET, Bumper/Fascia Face

97–02	Y	12533361	1	256.00	BAR, FRT BPR IMP
97–02	Y	12533362	1	226.00	BAR, RR BPR IMP
97	Y	11514139	4	*1.08	BOLT, FRT BPR FASCIA (M6X1X25) (08 900)
97–00	Y	25631448	2	*.88	BOLT, FRT BPR FASCIA (TO ENGY ABS FOAM SCREW)
97–98	Y	11514139	4	*1.08	BOLT, RR BPR FASCIA (TO UPR FASCIA TO RR QTR) (M6X1X25) (08 900)
97–02	Y	11510065	6	*1.20	BOLT, RR BPR FASCIA (TO SEAL RING) (POSN #1) (08 900)
97–02	Y	25631448	2	*.88	BOLT, RR BPR FASCIA (TO ENGY ABS FOAM SCREW)
97–02	Y	10433080	1	422.00	FASCIA, FRT BPR (RIM) (PAINT TO MATCH)
97–02	Y	10433081	1	444.00	FASCIA, RR BPR (PAINT TO MATCH)
97–02	Y	10281487	4	*.69	NUT, FRT BPR FASCIA BRKT (BRKT TO BAR) (04 605)

cardiagn.com

7.831 BAR – BOLT – FASCIA – NUT – PLATE – REINFORCEMENT – RETAINER – RIVET, Bumper/Fascia Face(Con't)

97–02	Y	10256973	1	24.60	RETAINER, FRT BPR FASCIA (TO BRKT)
97	Y	14093088	6	*.61	RETAINER, FRT BPR FASCIA (TO 10256973 PUSH PIN) (08.153)
01–02	Y	14093088	4	*.61	RETAINER, FRT BPR FASCIA (08.153)
97–02	Y	05973400	4	*1.05	RETAINER, RR BPR FASCIA (PUSH IN) (TO IMPACT BAR) (22.5MM LG) (01.269)
97–02	Y	10276529	2	3.45	RETAINER, RR BPR FASCIA LWR (FASCIA OTR TO QTR SI LWR)
97–02	Y	10257149	LH	9.80	RETAINER, RR BPR FASCIA OTR (FASCIA TO QTR)
97–02	Y	10257150	RH	9.80	RETAINER, RR BPR FASCIA OTR (FASCIA TO QTR)

7.832 EMBLEM, Bumper/Fascia

97–02	Y	10258164	1	30.50	EMBLEM, FRT BPR FASCIA

7.840 ABSORBER – NUT – SPACER, Bumper/Fascia Energy Absorber

97–98	Y	10281487	3	*.69	NUT, FRT BPR ENGY ABS (TO IMPACT BAR) (04 665)
99–02	Y	10281487	1	*.69	NUT, FRT BPR ENGY ABS (TO IMPACT BAR) (04.665)
97–02	Y	10281487	3	*.69	NUT, RR BPR ENGY ABS (TO IMPACT BAR) (04.665)

8.024 BRACKET – BUMPER – SPACER – STOP – STUD, Hood Panel Closing

97–02	Y	10277923	LH	8.15	BRACKET, HOOD STOP
97–02	Y	10277924	RH	8.15	BRACKET, HOOD STOP
97–02	Y	10408730	LH	15.60	STOP, HOOD
97–02	Y	10408731	RH	15.85	STOP, HOOD

8.055 STRIPE, Hood Panel Ornamentation

98	Y67 INDY PACE CAR (Z4Z)	10405304	LH	132.00	STRIPE, HOOD CTR
98	Y67 INDY PACE CAR (Z4Z)	10405305	RH	132.00	STRIPE, HOOD CTR

8.132 MOLDING – STRIPE, Front Fender and Body Ornamentation

97–02	Y BODY SI MLDG (B84)	10427434	RH	19.65	MOLDING, F/FDR CTR RR
97–02	Y BODY SI MLDG (B84)	10427435	LH		MOLDING, F/FDR CTR RR
98	Y67 INDY PACE CAR (Z4Z)	10405306	LH	116.00	STRIPE, BODY SI FRT
98	Y67 INDY PACE CAR (Z4Z)	10405307	RH	116.00	STRIPE, BODY SI FRT

8.147 DECAL – EMBLEM, Front Fender Name

98	Y67 INDY PACE CAR (Z4Z)	10412667	2	31.25	DECAL, F/FDR RR (PACE CAR) (08 141)
01–02	Y37	10420620	2	15.05	EMBLEM, F/FDR (Z06)
02	YY37	10314080	2	21.65	EMBLEM, F/FDR (405 HP)

8.155 BRACKET – PLATE, Fender Wheelhouse

97–02	Y	10409585	1	3.95	BRACKET, FRT W/H PNL
97–02	Y	10404603	2	1.70	PLATE, FRT W/H PNL BRKT STUD (04 785)

9.647 ANTENNA – BEZEL – BOLT – BRACKET – BUFFER – CABLE – CONNECTOR – NUT – PLATE – SEAL – STRAP – STUD, Radio Antenna

99–02	Y37	10264612	1	3.45	PLATE, RDO ANT BRKT STUD (12 980)
99–02	Y67	10264612	1	3.45	PLATE, RDO ANT BRKT STUD (12 980)

cardiagn.com

9.647 ANTENNA – BEZEL – BOLT – BRACKET – BUFFER – CABLE – CONNECTOR – NUT – PLATE – SEAL – STRAP – STUD, Radio Antenna(Con't)

98	Y67 PWR ANT (U75)	10264812	1	3.45	PLATE, RDO PWR ANT BRKT STUD (12.980)
00–01	YY37–67	11515174	2	*1.75	SEAL, RDO ANT CBL (4 1/4"X7 1/2") (TRIM AS REQ'D) (15.492)
98	Y67 PWR ANT (U75)	10415038	2	3.45	SEAL, RDO PWR ANT BRKT STUD PLT (15.222)
99–02	Y37–67	10415038	2	3.45	SEAL, RDO PWR ANT BRKT STUD PLT (15.222)
98–02	Y67	10278878	1	.29	STUD, RDO ANT (ANTENNA GROUND) (02.559)
99–02	Y37	10278878	1	.29	STUD, RDO ANT (ANTENNA GROUND) (02.559)

9.665 EMBLEM – GRILLE – HOUSING – NUT – RETAINER – SCREEN – SPEAKER, Radio Auxiliary Speakers

97–02	Y SPEAKER SYSTEM 6 (UZ6)	10291759	2	11.78	EMBLEM, RDO FRT S/D SPKR GRL
97–00	Y SPEAKER SYSTEM 6 (UZ6), (19I)	10274045	RH	27.93	GRILLE, RDO FRT S/D SPKR (BLACK)
97–00	Y SPEAKER SYSTEM 6 (UZ6), (19I)	10274046	LH	27.93	GRILLE, RDO FRT S/D SPKR (BLACK)
97–98	Y SPEAKER SYSTEM 6 (UZ6), (92I)	10274047	RH	27.93	GRILLE, RDO FRT S/D SPKR (PEWTER)
97–98	Y SPEAKER SYSTEM 6 (UZ6), (92I)	10274048	LH	27.93	GRILLE, RDO FRT S/D SPKR (PEWTER)
97–98	Y (94I)	10274049	RH	27.93	GRILLE, RDO FRT S/D SPKR (RED)
97–98	Y (94I)	10274050	LH	27.93	GRILLE, RDO FRT S/D SPKR (RED)
98–00	Y07–67 SPEAKER SYSTEM 6 (UZ6), (67I)	10285250	LH	27.93	GRILLE, RDO FRT S/D SPKR (CAMEL)
98–00	Y07–67 SPEAKER SYSTEM 6 (UZ6), (67I)	10285251	RH	27.93	GRILLE, RDO FRT S/D SPKR (CAMEL)
99–00	Y07–67 SPEAKER SYSTEM 6 (UZ6), (92I)	10274047	RH	27.93	GRILLE, RDO FRT S/D SPKR (PEWTER)
99–00	Y07–67 SPEAKER SYSTEM 6 (UZ6), (92I)	10274048	LH	27.93	GRILLE, RDO FRT S/D SPKR (PEWTER)
99	Y07–67 SPEAKER SYSTEM 6 (UZ6), (94I)	10274049	RH	27.93	GRILLE, RDO FRT S/D SPKR (RED)
99	Y07–67 SPEAKER SYSTEM 6 (UZ6), (94I)	10274050	LH	27.93	GRILLE RDO FRT S/D SPKR (RED)
99–00	Y37 4 SPKR SYS (UQ5), (19I)	10291439	LH	27.93	GRILLE, RDO FRT S/D SPKR (BLACK)
99–00	Y37 4 SPKR SYS (UQ5), (19I)	10291440	RH	26.66	GRILLE, RDO FRT S/D SPKR (BLACK)
00	Y07–67 SPEAKER SYSTEM 6 (UZ6), (70I)	10409257	LH	27.93	GRILLE, RDO FRT S/D SPKR (RED)
00	Y07–67 SPEAKER SYSTEM 6 (UZ6), (70I)	10409258	RH	27.93	GRILLE, RDO FRT S/D SPKR (RED)
01–02	Y (19I)	10274045	RH	27.93	GRILLE, RDO FRT S/D SPKR (BLACK)
01–02	Y (19I)	10274046	LH	27.93	GRILLE, RDO FRT S/D SPKR (BLACK)
01–02	Y (70I)	10409257	LH	27.93	GRILLE, RDO FRT S/D SPKR (RED)
01–02	Y (70I)	10409258	RH	27.93	GRILLE, RDO FRT S/D SPKR (RED)
01–02	Y07–67 (92I)	10274047	RH	27.93	GRILLE, RDO FRT S/D SPKR (PEWTER)
01–02	Y07–67 (92I)	10274048	LH	27.93	GRILLE, RDO FRT S/D SPKR (PEWTER)
01–02	Y07–67 (67I)	10285250	LH	27.93	GRILLE, RDO FRT S/D SPKR (CAMEL)
01–02	Y07–67 (67I)	10285251	RH	27.93	GRILLE, RDO FRT S/D SPKR (CAMEL)
97–02	Y07	10287668	2	9.02	GRILLE, RDO RR SPKR (BLACK)
98–02	Y67	10414162	RH	27.93	GRILLE, RDO RR SPKR
98–02	Y67	10414163	LH	27.93	GRILLE, RDO RR SPKR
97–02	Y07	10288371	LH	27.68	HOUSING, RDO RR SPKR (MTS SPKR)
97–02	Y07	10288372	RH	27.68	HOUSING, RDO RR SPKR (MTS SPKR)

cardiagn.com

9.665 EMBLEM – GRILLE – HOUSING – NUT – RETAINER – SCREEN – SPEAKER, Radio Auxiliary Speakers(Con't)

98–02	Y67	10272205	LH	24.60	HOUSING, RDO RR SPKR
98–02	Y67	10272206	RH	24.60	HOUSING, RDO RR SPKR
99–02	Y37	10272205	LH	24.60	HOUSING, RDO RR SPKR
99–02	Y37	10272206	RH	24.60	HOUSING, RDO RR SPKR
98	Y	20540336	2	3.45	RETAINER, RDO RR SPKR GRL (PAINT TO MATCH) (FITS .18 HOLE, .7 LG, .43 OD, NYLON) (14.630)
98–02	Y67	15748479	4	*.62	RETAINER, RDO RR SPKR GRL (13.0MM WIDE) (YELLOW) (U–BASE) (16.575)
98–02	Y67	16754704	2	*.53	RETAINER, RDO RR SPKR GRL (10.056)
98–02	Y67	20514862	2	*.52	RETAINER, RDO RR SPKR GRL (12.804)
97–02	Y	10291755	LH	8.20	SCREEN, RDO FRT S/D SPKR
97–02	Y	10291756	RH	8.20	SCREEN, RDO FRT S/D SPKR

9.778 BOLT – CONNECTOR – RELAY, Rear Window Defogger

97–98	Y07	12102561	1	11.89	CONNECTOR, INLINE–TO R/WDO DEFG (1–WAY F, W/LEADS) (02.535) (AC–DELCO #PT230)
98–02	Y67	12102561	1	11.89	CONNECTOR, INLINE–TO R/WDO DEFG (1–WAY F, W/LEADS) (02.535) (AC–DELCO #PT230)
99–02	Y07 SPEAKER SYSTEM 6 (UZ6)	12167133	2	12.95	CONNECTOR, INLINE–TO R/WDO DEFG (1–WAY F) (W/LEADS) (M/P 630 SELF LK) (AC–DELCO #PT798)
99–00	Y37 (EXC MULTIPLE CD PLYR (U1S)	12167133	2	12.95	CONNECTOR, INLINE–TO R/WDO DEFG (1–WAY F) (W/LEADS) (M/P 630 SELF LK) (AC–DELCO #PT798)
01–02	YY37	12167133	1	12.95	CONNECTOR, INLINE–TO R/WDO DEFG (1–WAY F) (W/LEADS) (M/P 630 SELF LK) (AC–DELCO #PT798)
97–02	Y	12193604	1	23.80	RELAY, R/WDO DEFG (GRAY) (SPST 280 MINI) (4–TERMINAL) (AC–DELCO #15–8733)

10.027 ADHESIVE – DECAL – SPACER – WINDSHIELD, Windshield Glass

98	Y67 INDY PACE CAR (Z4Z)	10405316	1	40.25	DECAL, W/S NA ("CORVETTE")

10.093 MOLDING, Windshield Reveal Molding

97	Y07	0299306	LH	63.25	MOLDING, W/S SI RVL (BLACK)
97	Y07	10299307	RH	63.25	MOLDING, W/S SI RVL (BLACK)
98–02	Y07–67	10299306	LH	63.25	MOLDING, W/S SI RVL (BLACK)
98–02	Y07–67	10299307	RH	63.25	MOLDING, W/S SI RVL (BLACK)
99–02	Y37	10422996	RH	40.25	MOLDING, W/S SI RVL (BLACK)
99–02	Y37	10422997	LH	40.25	MOLDING, W/S SI RVL (BLACK)
99–02	Y37	10427732	1	8.05	MOLDING, W/S UPR RVL

10.152 BRACKET – MOUNTING KIT – NUT – SHIELD, Windshield Wiper Motor

97–02	Y	10264094	1	3.40	BRACKET, WSW MOT

10.203 SUNSHADE, Windshield Sunshade

00–02	Y07–67 (C68), (EXC CANADIAN (Z49)	10442033	RH	70.50	SUNSHADE
00–02	Y07–67 (C68), (EXC CANADIAN (Z49)	10442034	LH	70.50	SUNSHADE

cardiagn.com

10.203 SUNSHADE, Windshield Sunshade(Con't)

00	Y37 LP GRP (TR9), (C88), (EXC CANADIAN (Z49)	10442033	RH	70.50	SUNSHADE
00	Y37 LP GRP (TR9), (C88), (EXC CANADIAN (Z49)	10442034	LH	70.50	SUNSHADE
01-02	Y37 (C88), (EXC CANADIAN (Z49)	10442033	RH	70.50	SUNSHADE
01-02	Y37 (C88), (EXC CANADIAN (Z49)	10442034	LH	70.50	SUNSHADE
97	Y07	10426849	LH	70.50	SUNSHADE, (BLACK)
97	Y07	10426850	RH	70.50	SUNSHADE, (BLACK)
98	Y (EXC CANADIAN (Z49), (2ND DES)	10426849	LH	70.50	SUNSHADE, (BLACK) (W/1" EXPOSED RETAINER PIN) (FOR 1ST DES SEE 10407144)
98	Y (EXC CANADIAN (Z49), (1ST DES)	10426849	LH	70.50	SUNSHADE, (BLACK) (W/2.5" EXPOSED RETAINER PIN) (FOR 2ND DES SEE 10426849)
98	Y (EXC CANADIAN (Z49), (2ND DES)	10426850	RH	70.50	SUNSHADE, (BLACK) (W/1" EXPOSED RETAINER PIN) (FOR 1ST DES SEE 10407145)
98	Y (EXC CANADIAN (Z49), (1ST DES)	10426850	RH	70.50	SUNSHADE, (BLACK) (W/2.5" EXPOSED RETAINER PIN) (FOR 2ND DES SEE 10426850)
99	Y07-67 (EXC CANADIAN (Z49), (2ND DES)	10426849	LH	70.50	SUNSHADE, (BLACK) (W/1" EXPOSED RETAINER PIN) (FOR 1ST DES SEE 10407144)
99	Y07-67 (EXC CANADIAN (Z49), (1ST DES)	10426849	LH	70.50	SUNSHADE, (BLACK) (W/2.5" EXPOSED RETAINER PIN) (FOR 2ND DES SEE 10426849)
99	Y07-67 (EXC CANADIAN (Z49)	10426850	RH	70.50	SUNSHADE, (BLACK)
99	Y37 (EXC LP GRP (TR9), CANADIAN (Z49), (2ND DES)	10426491	LH	70.50	SUNSHADE, (BLACK) (W/1" EXPOSED RETAINER PIN) (FOR 1ST DES SEE 10409387)
99	Y37 (EXC LP GRP (TR9), CANADIAN (Z49), (2ND DES)	10426492	RH	70.50	SUNSHADE, (BLACK) (W/1" EXPOSED RETAINER PIN) (FOR 1ST DES SEE 10409388)
99-00	Y37 CANADIAN (Z49), (EXC LP GRP (TR9), (1ST DES)	10426493	LH	70.50	SUNSHADE, (1" EXPOSED RETAINER PIN) (BLACK) (EARLY 2000 VEHICLES BUILT W/O MANUAL PSIR SUPPRESSION SWITCH IN GLOVE BOX, FOR 2ND DESIGN SEE 10442035)
99-00	Y37 CANADIAN (Z49), (EXC LP GRP (TR9), (1ST DES)	10426494	RH	70.50	SUNSHADE, (1" EXPOSED RETAINER PIN) (BLACK) (EARLY 2000 VEHICLES BUILT W/O MANUAL PSIR SUPPRESSION SWITCH IN GLOVE BOX, FOR 2ND DESIGN SEE 10442035)
99	Y37 LP GRP (TR9), (EXC CANADIAN (Z49), (2ND DES)	10426849	LH	70.50	SUNSHADE, (BLACK) (W/1" EXPOSED RETAINER PIN) (FOR 1ST DES SEE 10407144)
99	Y37 LP GRP (TR9), (EXC CANADIAN (Z49), (1ST DES)	10426849	LH	70.50	SUNSHADE, (BLACK) (W/2.5" EXPOSED RETAINER PIN) (FOR 2ND DES SEE 10426849)
99	Y37 LP GRP (TR9), (EXC CANADIAN (Z49)	10426850	RH	70.50	SUNSHADE, (BLACK)
00	Y07-67 CANADIAN (Z49), (1ST DES)	10426489	LH	70.50	SUNSHADE, (1" EXPOSED RETAINER PIN) (BLACK) (EARLY 2000 VEHICLES BUILT W/O MANUAL PSIR SUPPRESSION SWITCH IN GLOVE BOX, FOR 2ND DESIGN SEE 10442035)

cardiagn.com

10.203 SUNSHADE, Windshield Sunshade(Con't)

00	Y07-67 CANADIAN (Z49), (1ST DES)	10426490	RH	70.50	SUNSHADE, (1" EXPOSED RETAINER PIN) (BLACK) (EARLY 2000 VEHICLES BUILT W/O MANUAL PSIR SUPPRESSION SWITCH IN GLOVE BOX, FOR 2ND DESIGN SEE 10442035) .....
00	Y07-67 CANADIAN (Z49), (2ND DES)	10442035	RH	70.50	SUNSHADE, (1" EXPOSED RETAINER PIN) (LATER 2000 VEHICLES W/MANUAL PSIR SUPPRESSION SWITCH IN GLOVEBOX, FOR 1ST DESIGN SEE 10426490) .....
00	Y07-67 CANADIAN (Z49), (2ND DES)	10442036	LH	70.50	SUNSHADE, (1" EXPOSED RETAINER PIN) (LATER 2000 VEHICLES W/MANUAL PSIR SUPPRESSION SWITCH IN GLOVEBOX, FOR 1ST DESIGN SEE 10426490) .....
00	Y37 LP GRP (TR9), CANADIAN (Z49), (1ST DES)	10426489	LH	70.50	SUNSHADE, (1" EXPOSED RETAINER PIN) (BLACK) (EARLY 2000 VEHICLES BUILT W/O MANUAL PSIR SUPPRESSION SWITCH IN GLOVE BOX, FOR 2ND DESIGN SEE 10442035) .....
00	Y37 LP GRP (TR9), CANADIAN (Z49), (1ST DES)	10426490	RH	70.50	SUNSHADE, (1" EXPOSED RETAINER PIN) (BLACK) (EARLY 2000 VEHICLES BUILT W/O MANUAL PSIR SUPPRESSION SWITCH IN GLOVE BOX, FOR 2ND DESIGN SEE 10442035) .....
00	Y37 (EXC LP GRP (TR9), CANADIAN (Z49), (1ST DES)	10426491	LH	70.50	SUNSHADE, (1" EXPOSED RETAINER PIN) (BLACK) (EARLY 2000 VEHICLES BUILT W/O MANUAL PSIR SUPPRESSION SWITCH IN GLOVE BOX, FOR 2ND DESIGN SEE 10442035) .....
00	Y37 (EXC LP GRP (TR9), CANADIAN (Z49), (1ST DES)	10426492	RH	70.50	SUNSHADE, (1" EXPOSED RETAINER PIN) (BLACK) (EARLY 2000 VEHICLES BUILT W/O MANUAL PSIR SUPPRESSION SWITCH IN GLOVE BOX, FOR 2ND DESIGN SEE 10442035) ..... .
00	Y37 LP GRP (TR9), CANADIAN (Z49), (2ND DES)	10442035	RH	70.50	SUNSHADE, (1" EXPOSED RETAINER PIN) (LATER 2000 VEHICLES W/MANUAL PSIR SUPPRESSION SWITCH IN GLOVEBOX, FOR 1ST DESIGN SEE 10426490) .....
00	Y37 LP GRP (TR9), CANADIAN (Z49), (2ND DES)	10442036	LH	70.50	SUNSHADE, (1" EXPOSED RETAINER PIN) (LATER 2000 VEHICLES W/MANUAL PSIR SUPPRESSION SWITCH IN GLOVEBOX, FOR 1ST DESIGN SEE 10426490) .....
00	Y37 (EXC LP GRP (TR9), CANADIAN (Z49), (2ND DES)	10442037	RH	70.50	SUNSHADE, (1" EXPOSED RETAINER PIN) (LATER 2000 VEHICLES W/MANUAL PSIR SUPPRESSION SWITCH IN GLOVEBOX, FOR 1ST DESIGN SEE 10426490) .....
00	Y37 (EXC LP GRP (TR9), CANADIAN (Z49), (2ND DES)	10442038	LH	70.50	SUNSHADE, (1" EXPOSED RETAINER PIN) (LATER 2000 VEHICLES W/MANUAL PSIR SUPPRESSION SWITCH IN GLOVEBOX, FOR 1ST DESIGN SEE 10426490) ..... .

cardiagn.com

10.203 SUNSHADE, Windshield Sunshade(Con't)

00	Y37 CANADIAN (Z49), (EXC LP GRP (TR9), (2ND DES)	10442039	RH	70.50	SUNSHADE, (1" EXPOSED RETAINER PIN) (LATER 2000 VEHICLES W/MANUAL PSIR SUPPRESSION SWITCH IN GLOVEBOX, FOR 1ST DESIGN SEE 10426490)
00	Y37 CANADIAN (Z49), (EXC LP GRP (TR9), (2ND DES)	10442040	LH	70.50	SUNSHADE, (1" EXPOSED RETAINER PIN) (LATER 2000 VEHICLES W/MANUAL PSIR SUPPRESSION SWITCH IN GLOVEBOX, FOR 1ST DESIGN SEE 10426490)
01-02	Y CANADIAN (Z49)	10442035	RH	70.50	SUNSHADE, (1" EXPOSED RETAINER PIN)
01-02	Y CANADIAN (Z49)	10442036	LH	70.50	SUNSHADE, (1" EXPOSED RETAINER PIN)
	*EXPORT***************EXPORT***************EXPORT***************EXPORT***************EXPORT*				
00-02	Y07-67 (EXC C88)	10426849	LH	70.50	SUNSHADE, (BLACK)
00-02	Y07-67 (EXC C88)	10426850	RH	70.50	SUNSHADE, (BLACK)

10.219 BEZEL - BOLT - RETAINER, Windshield Sunshade

97-02	Y	10431402	LH	3.45	BEZEL, S/S ROD (BLACK)
97-02	Y	10431403	RH	3.45	BEZEL, S/S ROD (BLACK)
97-02	Y	10411051	2	*1.05	RETAINER, S/S

10.230 BAR - BRACKET - INSULATOR - NUT - REINFORCEMENT - RETAINER - SPACER, Instrument Panel

97-02	Y	10425866	1	141.00	BAR, I/P TIE (#47)
97-98	Y	10409654	1	120.00	BRACKET, I/P CTR SUPT
98-02	Y	10409133	1	3.45	BRACKET, I/P CTR SUPT
99-02	Y	10433229	1	118.00	BRACKET, I/P CTR SUPT
97	Y (94I)	10406526	RH	34.50	INSULATOR, I/P (RED)
97-02	Y (19I)	10409462	RH	34.50	INSULATOR, I/P (BLACK)
97-02	Y (92I)	10409463	RH	34.50	INSULATOR, I/P (PEWTER)
97-02	Y	10421513	LH	34.00	INSULATOR, I/P
98-99	Y07-67 (94I)	10406526	RH	34.50	INSULATOR, I/P (RED)
98-02	Y07-67 (67I)	10409465	RH	34.50	INSULATOR, I/P (OAK)
00	Y07-67 (70I)	10409466	RH	34.50	INSULATOR, I/P (RED)
01-02	Y (70I)	10409466	RH	34.50	INSULATOR, I/P (RED)
97-02	Y	10281487	2	*.69	NUT, I/P CTR SUPT BRKT (AT I/P CTR BRKT) (04.665)
97-02	Y	25538302	7	3.33	NUT, I/P CTR SUPT BRKT (4.2X1.41 TAPPING) (SPL) (03.430)
97-02	Y	10281487	10	*.69	NUT, I/P LWR TIE BAR (04.665)
97-02	Y	10290611	1	10.10	REINFORCEMENT, I/P TIE BAR (POSN #1)
97-02	Y	10290612	1	10.10	REINFORCEMENT, I/P TIE BAR (POSN #2)
98-02	Y	10279623	RH	*.54	RETAINER, I/P INSL (PEWTER) (14.640)
98-02	Y	10279623	LH	*.54	RETAINER, I/P INSL (PEWTER) (14.640)
97-02	Y	20538173	2	3.45	RETAINER, I/P TIE BAR (BLACK) (4.8 HOLE) (14.685)
97-02	Y	10149281	AR	3.45	SPACER, I/P (07.832)

10.485 BATTERY - BOLT - BRACKET - BULB - CONNECTOR - MODULE - NUT - RECEIVER - SHIELD - TRANSMITTER, Door Electric and Vacuum Locks

99	Y37	10281420	4	3.33	BOLT, DR LK & SI WDO RLY (10.268)
97-02	Y	10281420	4	3.33	BOLT, FRT S/D CONT MDL (10.268)

cardiagn.com

10.485 BATTERY – BOLT – BRACKET – BULB – CONNECTOR – MODULE – NUT – RECEIVER – SHIELD – TRANSMITTER, Door Electric and Vacuum Locks(Con't)

97–02	Y	10282800	1	4.35	BRACKET, R/CON DR LK RCVR
97–02	Y	12089527	2	2.35	CONNECTOR, MDL–FRT S/D CONT (GREEN) (6–WAY F) (16.263)
97–02	Y	12160773	4	.74	CONNECTOR, MDL–FRT S/D CONT (26–WAY F) (W/O LEADS)
97–02	Y	15305888	2	30.36	CONNECTOR, MDL–FRT S/D CONT (6–WAY F W/LEADS) (13.090) (AC–DELCO #PT1032)
01–02	Y 6–SPD M/TRANS (MM6), 4–SPD A/TRANS (M30)	12116247	1	20.05	CONNECTOR, MOT–DR LK ACTR (BLACK) (2–WAY M) (W/LEADS) (13.090) (AC–DELCO #PT288)
01–02	Y 5.7S (LS6), MANUAL 6 SPD O/D TRANS, TREMEC (M12)	12116247	1	20.05	CONNECTOR, MOT–DR LK ACTR (BLACK) (2–WAY M) (W/LEADS) (13.090) (AC–DELCO #PT288)
97–02	Y	12101856	2	18.83	CONNECTOR, SW–DR LK (GREEN) (2–WAY F, W/LEADS) (02.535) (AC–DELCO #PT248)
99	Y	09381399	1	331.59	MODULE, BODY CONT (02.560) (AC–DELCO #9381399)
00	Y	10304930	1	331.59	MODULE, BODY CONT (02.560) (AC–DELCO #10304930)
01–02	Y	10304931	1	331.59	MODULE, BODY CONT (02.560) (AC–DELCO #10304931)
97–99	Y	09352881	LH	218.00	MODULE, FRT S/D CONT (DRVR) (S/D LOCAL INTERFACE)
97–99	Y	09352891	RH	218.00	MODULE, FRT S/D CONT (PASS) (S/D LOCAL INTERFACE)
00–02	Y	09389689	LH	218.00	MODULE, FRT S/D CONT (DRVR) (S/D LOCAL INTERFACE)
00–02	Y	10435192	RH	218.00	MODULE, FRT S/D CONT (PASS) (S/D LOCAL INTERFACE)
97–02	Y	10295386	4	3.45	NUT, FRT S/D CONT MDL (M5 X .80) (SPECIAL AK SERIES) (14.683)

10.685 FILLER, Front Door Window

97–00	Y	10260109	LH	25.25	FILLER, FRT S/D WDO BELT FRT (W/PUSH PIN)
97–00	Y	10260110	RH	25.25	FILLER, FRT S/D WDO BELT FRT (W/PUSH PIN)
01–02	Y	10310079	LH	25.25	FILLER, FRT S/D WDO BELT FRT (W/O PUSH PIN)
01–02	Y	10310080	RH	25.25	FILLER, FRT S/D WDO BELT FRT (W/O PUSH PIN)

10.694 RETAINER – WEATHERSTRIP, Door Weatherstrip

97–98	Y	20540336	8	3.45	RETAINER, FRT S/D W/STR (PAINT TO MATCH) (FITS .18 HOLE, .7 LG, .43 OD, NYLON) (14.630)
99–02	Y	20538173	6	3.45	RETAINER, FRT S/D W/STR (BLACK) (4.8 HOLE) (14.685)
99–02	Y	20540336	2	3.45	RETAINER, FRT S/D W/STR (PAINT TO MATCH) (FITS .18 HOLE, .7 LG, .43 OD, NYLON) (14.630)
99–02	Y37	10297742	LH	32.75	RETAINER, FRT S/D W/STR FRT UPR (METAL STRIP RETAINS FRT UPR W/STR) (10.695)
99–02	Y37	10297743	RH	32.75	RETAINER, FRT S/D W/STR FRT UPR (METAL STRIP RETAINS FRT UPR W/STR) (10.695)

cardiagn.com

10.694 RETAINER – WEATHERSTRIP, Door Weatherstrip(Con't)

99–02	Y37	10419267	RH	13.60	RETAINER, FRT S/D W/STR UPR RR (METAL STRIP RETAINS RR UPR W/STR) (10.695)
99–02	Y37	10419268	LH	13.60	RETAINER, FRT S/D W/STR UPR RR (METAL STRIP RETAINS RR UPR W/STR) (10.695)
97–02	Y	10302723	LH	77.00	WEATHERSTRIP, FRT S/D (EPDM COMBINATION)
97–02	Y	10302724	RH	77.00	WEATHERSTRIP, FRT S/D (EPDM COMBINATION)

10.703 CLIP, Front Door Window Glass Run Channel

97–01	Y07 DUAL REMOVEABLE ROOF (C2L)	10408012	4	20.95	CLIP, FRT S/D WDO W/STR RET (RF PNL RET ALUM)
97–01	Y07 CLEAR ROOF PANEL (CCJ), REMOVABLE SUNROOF (CF7)	10408012	2	20.95	CLIP, FRT S/D WDO W/STR RET
98–01	Y67	10408012	2	20.95	CLIP, FRT S/D WDO W/STR RET (RF PNL RET ALUM)
99–01	Y37	10408012	2	20.95	CLIP, FRT S/D WDO W/STR RET (RF PNL RET ALUM)
02	Y07 DUAL REMOVEABLE ROOF (C2L)	10408012	4	20.95	CLIP, FRT S/D WDO W/STR RET (RF PNL RET ALUM)
02	Y07 CLEAR ROOF PANEL (CC3), REMOVABLE SUNROOF (CF7)	10408012	2	20.95	CLIP, FRT S/D WDO W/STR RET
02	Y37	10408012	2	20.95	CLIP, FRT S/D WDO W/STR RET (RF PNL RET ALUM)
02	Y67	10408012	2	20.95	CLIP, FRT S/D WDO W/STR RET (RF PNL RET ALUM)

10.710 BOLT – RETAINER – SEALING STRIP – WEATHERSTRIP, Front Door Window Glass Channel (Outer & Inner)

97–02	Y07	10252847	LH	30.50	RETAINER, FRT S/D WDO FRT W/STR
97–02	Y07	10252848	RH	30.50	RETAINER, FRT S/D WDO FRT W/STR
98–02	Y67	10252847	LH	30.50	RETAINER, FRT S/D WDO FRT W/STR
98–02	Y67	10252848	RH	30.50	RETAINER, FRT S/D WDO FRT W/STR
97–01	Y07	10299393	LH	20.10	RETAINER, FRT S/D WDO RR W/STR
97–02	Y07	10299394	RH	20.10	RETAINER, FRT S/D WDO RR W/STR
98–99	Y67	10252858	RH	11.00	RETAINER, FRT S/D WDO RR W/STR
98–99	Y67	10445410	LH	13.20	RETAINER, FRT S/D WDO RR W/STR
98–99	Y67	10445411	LH	13.20	RETAINER, FRT S/D WDO RR W/STR (USE TOGETHER W/ P/N 10445410)
98	Y67	20540336	2	3.45	RETAINER FRT S/D WDO RR W/STR (PUSH IN) (UPR) (PAINT TO MATCH) (FITS .18 HOLE, .7 LG, .43 OD, NYLON) (14.630)
99–02	Y67	20514862	2	*.52	RETAINER, FRT S/D WDO RR W/STR (PUSH IN) (12.804)
00	Y67 (1ST DES)	10252858	RH	11.00	RETAINER, FRT S/D WDO RR W/STR (USED ON VEHICLES WHERE FRONT END OF RETAINER IS SEALED TO REST OF RETAINER)
00	Y67 (2ND DES)	10445410	LH	13.20	RETAINER, FRT S/D WDO RR W/STR (ONE PIECE CURVED)
00	Y67 (1ST DES)	10445410	LH	13.20	RETAINER, FRT S/D WDO RR W/STR
00	Y67 (2ND DES)	10445411	LH	13.20	RETAINER, FRT S/D WDO RR W/STR (FLAT END ONE PIECE) (USED ON VEHICLES W/FRONT END OF RETAINER AS A SEPARATE PART THAT ATTACHES TO THE REST OF THE RETAINER W/BOLT/SCREWS)

cardiagn.com

10.710 BOLT – RETAINER – SEALING STRIP – WEATHERSTRIP, Front Door Window Glass Channel (Outer & Inner)(Con't)

00	Y67 (1ST DES)	10445411	LH	13.20	RETAINER, FRT S/D WDO RR W/STR (USE TOGETHER W/ P/N 10445410)
00	Y67 (2ND DES)	10445412	RH	13.20	RETAINER, FRT S/D WDO RR W/STR (ONE PIECE CURVED)
00	Y67 (2ND DES)	10445413	RH	13.20	RETAINER, FRT S/D WDO RR W/STR (FLAT END ONE PIECE) (USED ON VEHICLES W/FRONT END OF RETAINER AS A SEPARATE PART THAT ATTACHES TO THE REST OF THE RETAINER W/BOLT/SCREWS)
01–02	Y67	10445410	LH	13.20	RETAINER, FRT S/D WDO RR W/STR
01–02	Y67	10445411	LH	13.20	RETAINER, FRT S/D WDO RR W/STR (FLAT END ONE PIECE)
01–02	Y67	10445412	RH	13.20	RETAINER, FRT S/D WDO RR W/STR
01–02	Y67	10445413	RH	13.20	RETAINER, FRT S/D WDO RR W/STR (FLAT END ONE PIECE)
02	Y07	10299393	LH	20.10	RETAINER, FRT S/D WDO RP W/STR
98–00	Y67	10252854	RH	15.05	RETAINER, FRT S/D WDO UPR FRT W/STR
98–00	Y67	10308189	LH	15.05	RETAINER, FRT S/D WDO UPR FRT W/STR
99–02	Y37	20538173	2	3.45	RETAINER, FRT S/D WDO UPR FRT W/STR (PUSH IN) (BLACK) (4.8 HOLE) (14.685)
99–02	Y37	20540336	6	3.45	RETAINER, FRT S/D WDO UPR FRT W/STR (PUSH IN) (PAINT TO MATCH) (FITS .18 HOLE, .7 LG, .43 OD, NYLON) (14.630)
01–02	Y67	10308189	LH	15.05	RETAINER, FRT S/D WDO UPR FRT W/STR
01–02	Y67	10308190	RH	15.05	RETAINER, FRT S/D WDO UPR FRT W/STR
97–02	Y07 DUAL REMOVEABLE ROOF (C2L)	10252849	LH	22.25	RETAINER, FRT S/D WDO UPR W/STR (RF PNL RET ALUM)
97–02	Y07 CLEAR ROOF PANEL (CC3), REMOVABLE SUNROOF (CF7)	10252849	LH	22.25	RETAINER, FRT S/D WDO UPR W/STR (RF PNL RET ALUM)
97–02	Y07 DUAL REMOVEABLE ROOF (C2L)	10252850	RH	22.25	RETAINER, FRT S/D WDO UPR W/STR (RF PNL RET ALUM) (NON ENCAPSULATED)
97–02	Y07 CLEAR ROOF PANEL (CC3), REMOVABLE SUNROOF (CF7)	10252850	RH	22.25	RETAINER, FRT S/D WDO UPR W/STR (RF PNL RET ALUM) (NON ENCAPSULATED)
97	Y07	10252880	RH	20.80	SEALING STRIP, FRT S/D WDO OTR
98–00	Y07	10447039	LH	23.05	SEALING STRIP, FRT S/D WDO OTR
98–00	Y07	10447040	RH	23.05	SEALING STRIP, FRT S/D WDO OTR
98–00	Y67	10409129	LH	23.05	SEALING STRIP, FRT S/D WDO OTR
98–01	Y67	10409130	RH	23.05	SEALING STRIP, FRT S/D WDO OTR
98–00	Y67	10447043	RH	23.05	SEALING STRIP, FRT S/D WDO OTR
99–00	Y37	10431426	LH	23.05	SEALING STRIP, FRT S/D WDO OTR
99–00	Y37	10447046	RH	22.75	SEALING STRIP, FRT S/D WDO OTR
01–02	Y07	10313420	RH	23.05	SEALING STRIP, FRT S/D WDO OTR
01–02	Y07	10313421	LH	23.05	SEALING STRIP, FRT S/D WDO OTR
01–02	Y37	10313426	RH	22.75	SEALING STRIP, FRT S/D WDO OTR
01–02	Y37	10313427	LH	22.75	SEALING STRIP, FRT S/D WDO OTR
01–02	Y67	10313423	LH	23.05	SEALING STRIP, FRT S/D WDO OTR
01–02	Y67	10313424	RH	23.05	SEALING STRIP, FRT S/D WDO OTR
98–02	Y67	10236329	LH	47.25	WEATHERSTRIP, FRT S/D WDO UPR RR

cardiagn.com

10.710 BOLT – RETAINER – SEALING STRIP – WEATHERSTRIP, Front Door Window Glass Channel (Outer & Inner) (Con't)

98–02	Y67	10236330	RH	47.25	WEATHERSTRIP, FRT S/D WDO UPR RR
98–02	Y67	10415919	LH	69.00	WEATHERSTRIP, FRT S/D WDO RR
98–02	Y67	10415920	RH	69.00	WEATHERSTRIP, FRT S/D WDO RR
97–00	Y07 DUAL REMOVEABLE ROOF (C2L)	10236315	LH	47.75	WEATHERSTRIP, FRT S/D WDO UPR
97–00	Y07 CLEAR ROOF PANEL (CC3), REMOVABLE SUNROOF (CF7)	10236315	LH	47.75	WEATHERSTRIP, FRT S/D WDO UPR
97–00	Y07 CLEAR ROOF PANEL (CC3), REMOVABLE SUNROOF (CF7)	10236316	RH	47.75	WEATHERSTRIP, FRT S/D WDO UPR
97–00	Y07 DUAL REMOVEABLE ROOF (C2L)	10236316	RH	47.75	WEATHERSTRIP, FRT S/D WDO UPR
01	Y07 DUAL REMOVEABLE ROOF (C2L)	10313370	LH	47.75	WEATHERSTRIP, FRT S/D WDO UPR
01–02	Y07 CLEAR ROOF PANEL (CC3), REMOVABLE SUNROOF (CF7)	10313370	LH	47.75	WEATHERSTRIP, FRT S/D WDO UPR
01–02	Y07 CLEAR ROOF PANEL (CC3), REMOVABLE SUNROOF (CF7)	10313371	RH	47.75	WEATHERSTRIP, FRT S/D WDO UPR
01–02	Y07 DUAL REMOVEABLE ROOF (C2L)	10313371	RH	47.75	WEATHERSTRIP, FRT S/D WDO UPR
02	Y07 DUAL REMOVEABLE ROOF (C2L)	10313370	LH	47.75	WEATHERSTRIP, FRT S/D WDO UPR
98–02	Y67	10236327	LH	55.25	WEATHERSTRIP, FRT S/D WDO UPR FRT
98–02	Y67	10236328	RH	55.25	WEATHERSTRIP, FRT S/D WDO UPR FRT
99–02	Y37	10310680	RH	150.00	WEATHERSTRIP, FRT S/D WDO UPR FRT
99–02	Y37	10415921	LH	150.00	WEATHERSTRIP, FRT S/D WDO UPR FRT

11.120 RETAINER, Rear Hatch Window

99–02	Y37	15748479	4	*.62	RETAINER, R/WDO LWR G/MLDG (13.0MM WIDE) (YELLOW) (U–BASE) (16.575)
00–02	Y37	00332364	2	*.52	RETAINER, R/WDO LWR G/MLDG (08.154)

11.208 MOLDING, Rear Window Reveal Molding

99–00	Y37	10400804	1	24.80	MOLDING, R/WDO RVL
01	Y37	88948473	1	43.75	MOLDING, R/WDO RVL

11.373 BOLT – FRAME – INSULATOR – PANEL, Front Seat Back

97–02	Y	10277966	1	8.75	BOLT, D/SEAT BK CUSH FRM
97–02	Y	10277966	1	8.75	BOLT, P/SEAT BK CUSH FRM
97	Y MAN RECL FRT BKT ST, DELUXE (AR9)	12455474	1	171.00	FRAME, D/SEAT BK CUSH
97–98	Y RECL FRT BKT ST, LUXURY (AQ9), IL3	12455474	1	171.00	FRAME, D/SEAT BK CUSH (USE W/TRIM CODES ENDING IN 3, 4)
98	Y MAN RECL FRT BKT ST, DELUXE (AR9)	12455474	1	171.00	FRAME, D/SEAT BK CUSH (2 BLADDER SYSTEM MUST MODIFY–REVISE WINGS AND ADD 6 RIVET HOLES, PER GUIDE MARKS ON FRAME AS REQD. 1 BOLSTER SYSTEM 6 HOLES NOT REQD.)
98–01	Y07 CONVENIENCE PKG (AAB), RECL FRT BKT ST, LUXURY (AQ9)	12455536	1		FRAME, D/SEAT BK CUSH
98–00	Y07 CONVENIENCE PKG (AAB), MAN RECL FRT BKT ST, DELUXE (AR9)	12455536	1		FRAME, D/SEAT BK CUSH

cardiagn.com

11.373 BOLT – FRAME – INSULATOR – PANEL, Front Seat Back(Con't)

98–00	Y67 6–WAY PWR P/SEAT ADJR (AG2), RECL FRT BKT ST, LUXURY (AQ9), IL3	12455536	1		FRAME, D/SEAT BK CUSH
99	Y RECL FRT BKT ST, LUXURY (AQ9), IL3	12455474	1	171.00	FRAME, D/SEAT BK CUSH
99	Y MAN RECL FRT BKT ST, DELUXE (AR9)	12455474	1	171.00	FRAME, D/SEAT BK CUSH
99–00	Y37 MAN RECL FRT BKT ST, DELUXE (AR9), (EXC CONVENIENCE PKG (AAB)	12455536	1		FRAME, D/SEAT BK CUSH
99–02	Y37 MAN RECL FRT BKT ST, DELUXE (AR9)	12455536	1		FRAME, D/SEAT BK CUSH
00	Y RECL FRT BKT ST, LUXURY (AQ9), IL3	12455536	1		FRAME, D/SEAT BK CUSH
00	Y MAN RECL FRT BKT ST, DELUXE (AR9)	12455536	1		FRAME, D/SEAT BK CUSH
01	Y67 CONVENIENCE PKG (AAB), RECL FRT BKT ST, LUXURY (AQ9)	12455536	1		FRAME, D/SEAT BK CUSH
01–02	Y67 MAN RECL FRT BKT ST, DELUXE (AR9)	12455536	1		FRAME, D/SEAT BK CUSH
02	Y07	12455536	1		FRAME, D/SEAT BK CUSH
97	Y MAN RECL FRT BKT ST, DELUXE (AR9)	12455474	1	171.00	FRAME, P/SEAT BK CUSH
97–98	Y RECL FRT BKT ST, LUXURY (AQ9), 6–WAY PWR P/SEAT ADJR (AG2), IL3	12455474	1	171.00	FRAME, P/SEAT BK CUSH (2 BLADDER SYSTEM MUST MODIFY–REVISE WINGS AND ADD 6 RIVET HOLES, PER GUIDE MARKS ON FRAME AS REQD. 1 BOLSTER SYSTEM 6 HOLES NOT REQD.)
98	Y MAN RECL FRT BKT ST, DELUXE (AR9)	12455474	1	171.00	FRAME, P/SEAT BK CUSH (2 BLADDER SYSTEM MUST MODIFY–REVISE WINGS AND ADD 6 RIVET HOLES, PER GUIDE MARKS ON FRAME AS REQD. 1 BOLSTER SYSTEM 6 HOLES NOT REQD.)
98	Y07 CONVENIENCE PKG (AAB), 6–WAY PWR P/SEAT ADJR (AG2), RECL FRT BKT ST, LUXURY (AQ9), IL3	12455536	1		FRAME, P/SEAT BK CUSH
98–99	Y07 MAN RECL FRT BKT ST, DELUXE (AR9)	12455536	1		FRAME, P/SEAT BK CUSH
98	Y67 CONVENIENCE PKG (AAB), MAN RECL FRT BKT ST, DELUXE (AR9)	12455536	1		FRAME, P/SEAT BK CUSH
98–01	Y67 6–WAY PWR P/SEAT ADJR (AG2), RECL FRT BKT ST, LUXURY (AQ9), IL3	12455536	1		FRAME, P/SEAT BK CUSH
99	Y MAN RECL FRT BKT ST, DELUXE (AR9)	12455474	1	171.00	FRAME, P/SEAT BK CUSH
99–02	Y MAN RECL FRT BKT ST, DELUXE (AR9)	12455536	1		FRAME, P/SEAT BK CUSH
99–02	Y07 6–WAY PWR P/SEAT ADJR (AG2), RECL FRT BKT ST, LUXURY (AQ9), IL3	12455536	1		FRAME, P/SEAT BK CUSH
99	Y07–67 RECL FRT BKT ST, LUXURY (AQ9), 6–WAY PWR P/SEAT ADJR (AG2), IL3	12455474	1	171.00	FRAME, P/SEAT BK CUSH
99–00	Y37 MAN RECL FRT BKT ST, DELUXE (AR9)	12455536	1		FRAME, P/SEAT BK CUSH

cardiagn.com

11.373 BOLT – FRAME – INSULATOR – PANEL, Front Seat Back(Con't)

00	Y07–67 RECL FRT BKT ST, LUXURY (AQ9), 6–WAY PWR P/SEAT ADJR (AG2), IL3	12455536	1		FRAME, P/SEAT BK CUSH
97–02	Y07	20464592	1	118.00	INSULATOR, F/SEAT BK BODY PNL (15.492)
99–02	Y37	20464592	1	118.00	INSULATOR, F/SEAT BK BODY PNL (15.492)
97–99	Y	10290554	LH	53.50	PANEL, F/SEAT BK BODY
97–99	Y	10290555	RH	53.50	PANEL, F/SEAT BK BODY
00	Y	10409443	RH	51.75	PANEL, F/SEAT BK BODY (W/O REINFORCEMENT) (10.527)
00	Y	10409444	LH	51.50	PANEL, F/SEAT BK BODY (W/O REINFORCEMENT)
01	Y (1ST DES)	10409443	RH	51.75	PANEL, F/SEAT BK BODY (W/O REINFORCEMENT) (10.527) (CARS BUILT WITH AND AFTER THE LAST EIGHT DIGIT OF VIN 15117747;FOR 2ND DESIGN SEE 10449456)
01	Y (1ST DES)	10409444	LH	51.50	PANEL, F/SEAT BK BODY (W/O REINFORCEMENT) (CARS BUILT WITH AND AFTER THE LAST EIGHT DIGIT OF VIN 15117747;FOR 2ND DESIGN SEE 10449455)
01	Y (2ND DES)	10449455	LH	51.75	PANEL, F/SEAT BK BODY (CARS BUILT PRIOR TO LAST 8 DIGITS OF VIN 15117747)
01	Y (2ND DES)	10449456	RH	51.75	PANEL, F/SEAT BK BODY (CARS BUILT PRIOR TO LAST 8 DIGITS OF VIN 15117747)
02	Y	10449455	LH	51.75	PANEL, F/SEAT BK BODY
02	Y	10449456	RH	51.75	PANEL, F/SEAT BK BODY

11.620 MOLDING, Folding Rear Seat

99–02	Y37	10258601	1	14.60	MOLDING, R/WDO LWR GARN (11.120)

11.935 CONNECTOR, Courtesy/Dome/Reading Lamp

97–02	Y	12117371	2	25.70	CONNECTOR, SW–DM LP (3–WAY M W/LEADS) (02.530) (AC–DELCO #PT504)

14.640 CLIP – PANEL – RETAINER, Roof Headlining

97–02	Y07	15748479	4	*.62	CLIP, RF RR INR T/PNL RET (13.0MM WIDE) (YELLOW) (U–BASE) (16.575)
97–02	Y07	10406506	1	59.75	PANEL, HDLNG RR TR (BLACK)
97–02	Y07 REMOVABLE SUNROOF (CF7), DUAL REMOVEABLE ROOF (C2L)	10246988	1	83.25	PANEL, HDLNG TR
99–02	Y37	10253386	1	83.25	PANEL, HDLNG TR
97–02	Y07	10267772	LH	3.45	RETAINER, HDLNG RR T/PNL
97–02	Y07	20538173	4	3.45	RETAINER, HDLNG RR T/PNL (BLACK) (4.8 HOLE) (14.685)
99	Y37 (1ST DES)	10292132	1	3.45	RETAINER, HDLNG T/PNL (CHRISTMAS TREE STYLE FASTENER)
99	Y37 (2ND DES)	14093088	1	*.61	RETAINER, HDLNG T/PNL (08.153) (PUSH IN STYLE FASTENER)
00–02	Y37	14093088	1	*.61	RETAINER, HDLNG T/PNL (08.153)

cardiagn.com

14.665 NUT – PANEL, Side Door Opening Trim

97–98	Y	10277883	6	3.33	NUT, FRT S/D OPG FIN PNL (RING TO QTR PNL JOINT) (POSN #1) (12.942)
99–02	Y	01629843	6	3.33	NUT, FRT S/D OPG FIN PNL (RING TO QTR PNL JOINT) (PAINT TO MATCH) (08.919)
97–00	Y	10418921	LH	131.00	PANEL, FRT S/D OPG FIN (UPR) (12.942)
97–00	Y	10418922	RH	164.00	PANEL, FRT S/D OPG FIN (UPR) (12.942)
97–00	Y	10444701	LH	157.00	PANEL, FRT S/D OPG FIN (LWR)
97–00	Y	10444702	RH	158.00	PANEL, FRT S/D OPG FIN (LWR)
01–02	Y07–67	10418921	LH	161.00	PANEL, FRT S/D OPG FIN (UPR) (12.942)
01–02	Y07–67	10418922	RH	164.00	PANEL, FRT S/D OPG FIN (UPR) (12.942)
01–02	Y07–67	10444701	LH	157.00	PANEL, FRT S/D OPG FIN (LWR)
01–02	Y07–67	10444702	RH	158.00	PANEL, FRT S/D OPG FIN (LWR)
01–02	Y37	10420532	LH	161.00	PANEL, FRT S/D OPG FIN (UPR)
01–02	Y37	10420534	RH	161.00	PANEL, FRT S/D OPG FIN (UPR)
01–02	Y37	10444707	RH	161.00	PANEL, FRT S/D OPG FIN (LWR)
01–02	Y37	10444708	LH	161.00	PANEL, FRT S/D OPG FIN (LWR)

14.870 BOLT – BRACKET KIT – PLATE, Child Safety Seat

00–02	Y37	10289507	1	1.90	PLATE, CHILD ST TOP STRP BRKT ANC (12.184)
	*EXPORT***************EXPORT***************EXPORT***************EXPORT***************EXPORT*				
99	Y37 CHILD RST PROVISIONS (AN4) (CANADIAN)	10289507	1	1.90	PLATE, CHILD ST TOP STRP BRKT ANC (12.184)

14.875 BELT – BELT KIT – BOLT – BRACKET – COVER – EXTENSION KIT – NUT – PLATE, Seat Belt

98–02	Y67	10402798	1	18.50	BRACKET, D/SEAT SHLDR BELT GDE
98–02	Y67	10402807	1	18.50	BRACKET, P/SEAT SHLDR BELT GDE
97–98	Y	15734139	2	5.30	PLATE, D/SEAT BELT ANC (BKL SI) (OVAL) (16.714)
99–02	Y	15734139	1	5.30	PLATE, D/SEAT BELT ANC (BKL SI) (OVAL) (16.714)
97–02	Y F/SEAT INFL RST SYS (AK5)	10403689	1	3.35	PLATE, D/SEAT BELT RETR ANC
97–02	Y F/SEAT INFL RST SYS (AK5)	10403689	1	3.35	PLATE, P/SEAT BELT RETR ANC
97–98	Y	15734139	2	5.30	PLATE, P/SEAT BELT RETR ANC (OVAL) (16.714)
99–02	Y	15734139	1	5.30	PLATE, P/SEAT BELT RETR ANC (OVAL) (16.714)

15.024 NUT – RETAINER – SHADE – SUPPORT, Rear Seat to Back Window Panel

97–02	Y07	10209685	2	3.45	RETAINER, LUGG SHADE (15.222)
97–02	Y07 R/CMPT SECURITY SHADE (D42)	10269718	1	148.00	SHADE, LUGG (INCLS NET, SHADE, BAG)
97–02	Y07	10271944	2	10.10	SUPPORT, LUGG SHADE (RR)

15.222 BOLT – CARPET – COVER – INSULATOR – LATCH – NET – NUT – PANEL – PLATE – RETAINER – SEAL – STRIKER – TRIM, Rear Compartment Trim

97–02	Y07	10407543	RH	38.00	PANEL, R/CMPT SI TR
97–02	Y07	10407544	LH	38.00	PANEL, R/CMPT SI TR
97–02	Y07	10404603	2	1.70	PLATE, CONVENIENCE NET LWR STUD (04.785)

cardiagn.com

15.222 BOLT – CARPET – COVER – INSULATOR – LATCH – NET – NUT – PANEL – PLATE – RETAINER – SEAL – STRIKER – TRIM, Rear Compartment Trim(Con't)

98–02	YY37–67	10404603	4	1.70	PLATE, CONVENIENCE NET STUD (04.785)
99–02	Y37	10404603	4	1.70	PLATE, CONVENIENCE NET STUD (04.785)
97–02	Y07	10404603	2	1.70	PLATE, CONVENIENCE NET UPR STUD (POSN #2) (04.785)
98–02	Y67	16674629	6	*3.45	RETAINER, R/CMPT FRT TR (FASTNER–PUSH–IN FITS HOLE 6.35, OD–25.4, LEN–18, SGL HEAD)
97–02	Y07	00332364	RH	*.52	RETAINER, R/CMPT SI T/PNL (PUSH IN) (POSN #6) (08.154)
97–02	Y07	10285935	2	*.53	RETAINER, R/CMPT SI T/PNL (PUSH IN) (WHITE) (4MM HOLE, 25.5MM LG) (MALE PUSH–IN) (14.630)
97–02	Y07	20560336	RH	3.45	RETAINER, R/CMPT SI T/PNL (PUSH IN) (POSN #4) (PAINT TO MATCH) (FITS .18 HOLE, .7 LG, .43 OD, NYLON) (14.630)
97–02	Y07	15748479	6	*.62	RETAINER, R/CMPT SI T/PNL RET (13.0MM WIDE) (YELLOW) (U–BASE) (16.575)
97	Y07	10410732	6	3.45	RETAINER, R/END TR FIN PNL
98–02	Y07	10410732	6	3.45	RETAINER, R/END TR FIN PNL
98–00	Y67	10410732	6	3.45	RETAINER, R/END TR FIN PNL
00–02	Y07	10435620	1		RETAINER, R/END TR FIN PNL
98–02	YY37–67	10415038	4	3.45	SEAL, CONVENIENCE NET ANC PLT
98–02	YY07	11515174	2	*1.75	SEAL, CONVENIENCE NET LWR STUD PLT (4 1/4"X7 1/2") (TRIM AS REQ'D) (15.492)
98–02	Y07	10415038	2	3.45	SEAL, CONVENIENCE NET UPR STUD PLT
97–00	Y	10290688	2	3.45	STRIKER, R/CMPT PNL STOW PKT CVR LAT (POSN #2)
97–98	Y	10401266	2	3.45	STRIKER, R/CMPT PNL STOW PKT CVR LAT (POSN #1)
99–02	Y07–67	10401266	2	3.45	STRIKER, R/CMPT PNL STOW PKT CVR LAT (POSN #1)
99	Y37	10402712	1	208.00	TRIM, R/CMPT FLR PNL
00	Y37	10444221	1	208.00	TRIM, R/CMPT FLR PNL
01–02	Y37	10422924	1	208.00	TRIM, R/CMPT FLR PNL
01–02	Y67 (19I), (EXC CHASSIS, REALTIME DAMPING (F45)	10438995	1	208.00	TRIM, R/CMPT FLR PNL (BLACK)
01–02	Y67 (92I), (EXC CHASSIS, REALTIME DAMPING (F45)	10438996	1	208.00	TRIM, R/CMPT FLR PNL (PEWTER)
01–02	Y67 (67I), (EXC CHASSIS, REALTIME DAMPING (F45)	10438997	1	208.00	TRIM, R/CMPT FLR PNL (OAK)
01–02	Y67 (70I), (EXC CHASSIS, REALTIME DAMPING (F45)	10438998	1	208.00	TRIM, R/CMPT FLR PNL (RED)
01–02	Y67 CHASSIS, REALTIME DAMPING (F45), (19I)	10439000	1	208.00	TRIM, R/CMPT FLR PNL (BLACK)
01–02	Y67 CHASSIS, REALTIME DAMPING (F45), (92I)	10439001	1	208.00	TRIM, R/CMPT FLR PNL (PEWTER)
01–02	Y67 CHASSIS, REALTIME DAMPING (F45), (67I)	10439002	1	208.00	TRIM, R/CMPT FLR PNL (OAK)
01–02	Y67 CHASSIS, REALTIME DAMPING (F45), (70I)	10439003	1	208.00	TRIM, R/CMPT FLR PNL (RED)

cardiagn.com

15.222 BOLT – CARPET – COVER – INSULATOR – LATCH – NET – NUT – PANEL – PLATE – RETAINER – SEAL – STRIKER – TRIM, Rear Compartment Trim(Con't)

97	Y (EXC CHASSIS, REALTIME DAMPING (F45), MULTIPLE CD PLYR (U1S)	10292411	1	208.00	TRIM, R/CMPT FLR PNL STOW PKT (GRAY)
97	Y MULTIPLE CD PLYR (U1S), (EXC CHASSIS, REALTIME DAMPING (F45)	10292412	1	208.00	TRIM, R/CMPT FLR PNL STOW PKT (GRAY)
97	Y07 CHASSIS, REALTIME DAMPING (F45), (EXC MULTIPLE CD PLYR (U1S)	10292413	1	208.00	TRIM, R/CMPT FLR PNL STOW PKT (GRAY)
97	Y07 CHASSIS, REALTIME DAMPING (F45), MULTIPLE CD PLYR (U1S)	10292414	1	208.00	TRIM, R/CMPT FLR PNL STOW PKT (GRAY)
98–00	Y07–67 (EXC CHASSIS, REALTIME DAMPING (F45), MULTIPLE CD PLYR (U1S)	10292411	1	208.00	TRIM, R/CMPT FLR PNL STOW PKT (GRAY)
98–00	Y07–67 MULTIPLE CD PLYR (U1S), (EXC CHASSIS, REALTIME DAMPING (F45)	10292412	1	208.00	TRIM, R/CMPT FLR PNL STOW PKT (GRAY)
98–00	Y07–67 CHASSIS, REALTIME DAMPING (F45), (EXC MULTIPLE CD PLYR (U1S)	10292413	1	208.00	TRIM, R/CMPT FLR PNL STOW PKT (GRAY)
98–00	Y07–67 CHASSIS, REALTIME DAMPING (F45), MULTIPLE CD PLYR (U1S)	10292414	1	208.00	TRIM R/CMPT FLR PNL STOW PKT (GRAY)
01–02	Y07 (EXC CHASSIS, REALTIME DAMPING (F45), MULTIPLE CD PLYR (U1S)	10292411	1	208.00	TRIM, R/CMPT FLR PNL STOW PKT (GRAY)
01–02	Y07 MULTIPLE CD PLYR (U1S), (EXC CHASSIS, REALTIME DAMPING (F45)	10292412	1	208.00	TRIM, R/CMPT FLR PNL STOW PKT (GRAY)
01–02	Y07 CHASSIS, REALTIME DAMPING (F45), (EXC MULTIPLE CD PLYR (U1S)	10292413	1	208.00	TRIM, R/CMPT FLR PNL STOW PKT (GRAY)
01–02	Y07 CHASSIS, REALTIME DAMPING (F45), MULTIPLE CD PLYR (U1S)	10292414	1	208.00	TRIM, R/CMPT FLR PNL STOW PKT (GRAY)
98–02	Y67	10427806	LH	6.70	TRIM, R/CMPT PNL FRM SUPT
98–02	Y67	10427807	RH	6.70	TRIM, R/CMPT PNL FRM SUPT
99–02	Y37	10427808	LH	6.70	TRIM, R/CMPT PNL FRM SUPT
99–02	Y37	10427809	RH	6.70	TRIM, R/CMPT PNL FRM SUPT
99–00	Y37	10299182	1	112.00	TRIM, R/CMPT RR PNL (BLACK)
01–02	Y37	10434785	1	112.00	TRIM, R/CMPT RR PNL
01–02	Y67 (19I)	10299182	1	112.00	TRIM, R/CMPT RR PNL (BLACK)
01–02	Y67 (92I), (EXC MULTIPLE CD PLYR (U1S)	10439071	1	112.00	TRIM, R/CMPT RR PNL (PEWTER)
01–02	Y67 (67I), (EXC MULTIPLE CD PLYR (U1S)	10439072	1	112.00	TRIM, R/CMPT RR PNL (OAK)
01–02	Y67 (70I), (EXC MULTIPLE CD PLYR (U1S)	10439073	1	112.00	TRIM, R/CMPT RR PNL (RED)
01–02	Y67 MULTIPLE CD PLYR (U1S), (92I)	10439143	1	112.00	TRIM, R/CMPT RR PNL (PEWTER)
01–02	Y67 MULTIPLE CD PLYR (U1S), (67I)	10439144	1	112.00	TRIM, R/CMPT RR PNL (OAK)
01–02	Y67 MULTIPLE CD PLYR (U1S), (70I)	10439145	1	112.00	TRIM, R/CMPT RR PNL (RED)

cardiagn.com

ILLUSTRATION INDEX

	TITLE	GRID
1998–2002	Y67 FOLDING TOP ASM	7–D4
1998	Y67 FOLDING TOP ASM/HARDWARE	7–D8
1999	Y67 FOLDING TOP ASM/HARDWARE	7–D13
2000–2002	Y67 FOLDING TOP ASM/HARDWARE	7–D18
1999–2001	Y37 ROOF HEADLINER	7–D24
2002	Y37 ROOF HEADLINER	7–D26
1997	Y07 TRIM/FRONT DOOR & SEALING	7–E2
1998–2002	Y67 TRIM/FRONT DOOR & SEALING	7–E7
1998–2002	Y07 TRIM/FRONT DOOR & SEALING	7–E15
1999–2002	Y37 TRIM/FRONT DOOR & SEALING	7–E22
1997	Y SEAT ASM/FRONT (AQ9)	7–F2
1997–2002	Y SEAT ASM/FRONT (AR9)	7–F7
1998	Y SEAT ASM/FRONT (1ST DESIGN SEATS USE "2–BLADDER BOLSTER" SYSTEM(AQ9)(1ST DES)	7–F14
1998	Y SEAT ASM/FRONT (2ND DESIGN SEATS USE "1–BLADDER BOLSTER" SYSTEM)(AQ9)(2ND DES)	7–F21
1999–2002	Y SEAT ASM/FRONT (AQ9)	7–F21
1997–1998	Y INFLATABLE RESTRAINT SYSTEM (AK5)	7–G2
1999	Y INFLATABLE RESTRAINT SYSTEM (AK5)	7–G6
2000–2002	Y INFLATABLE RESTRAINT SYSTEM (AK5)	7–G10
1997–2002	Y07 SEAT BELT HARDWARE	7–G14
1998–2002	Y67 SEAT BELT HARDWARE	7–G21
1999–2002	Y37 SEAT BELT HARDWARE	7–H2

cardiagn.com

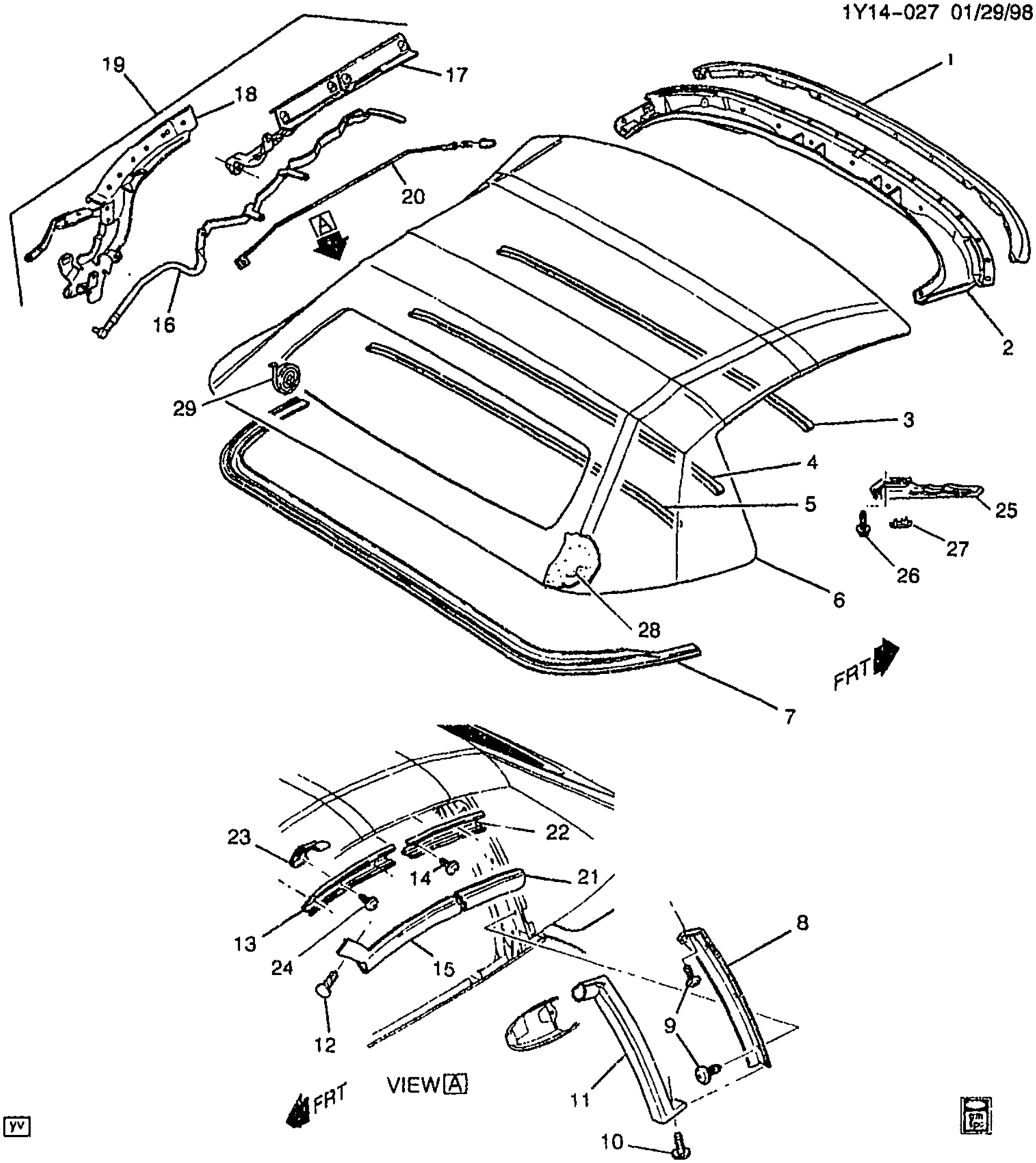

1Y14--027

1998–2002 Y67 FOLDING TOP ASM

1.	7–A5	14.130	BOW, F/TOP #1	98–02	Y67 (C05)	1	12369624
	7–A5	14.130	FASTENER KIT, F/TOP #1 BOW (14.340)	98–02	Y67 (C05)	1	12369625
2.	7–A5	14.080	SEAL, F/TOP FRT (14.130)	98–02	Y67 (C05)	1	12369660

cardiagn.com

							1Y14-027
	7-A5	14.130	FASTENER KIT, F/TOP FRT SEAL	98-02	Y67 (C05)	1	12369661
3.	7-A6	14.215	BOW, F/TOP #2	98-02	Y67 (C05, 16T)	1	12369626
	7-A5	14.140	FASTENER KIT, F/TOP #2 BOW & #3 BOW (14.340)	98-02	Y67 (C05)	1	12369627
4.	7-N24	12.952	BOW, RF PNL #3	98-99	Y67 (C05, 16T, 67T)	1	12457478
	7-N24	12.952	BOW, RF PNL #3	00-02	YY67 (C05, 16T)	1	12457478
	7-A5	14.140	FASTENER KIT, F/TOP #2 BOW & #3 BOW (14.340)	98-02	Y67 (C05)	1	12369627
5.	7-A6	14.215	BOW, F/TOP #4	98-02	Y67 (C05)	1	12369628
	7-A6	14.340	FASTENER KIT, F/TOP #4 BOW	98-02	Y67 (C05)	1	12369629
6.	7-N28	13.347	COVER, F/TOP (BLACK) (INCLS BACKLITE) (13.346)	98-00	Y67 (C05, 41T)	1	12369653
	7-N28	13.347	COVER, F/TOP (WHITE)	98-02	Y67 (C05, 16T)	1	12369654
	7-N28	13.347	COVER, F/TOP (LT OAK)	98-00	Y67 (C05, 67T)	1	12369655
	7-N28	13.347	COVER, F/TOP (CLOTH MATERIAL AND INCLUDES THE WINDOW)	01-02	YY67 (C05, 41T)	1	88950135
	7-N28	13.347	COVER, F/TOP (CLOTH MATERIAL AND INCLUDES THE WINDOW)	01-02	YY67 (C05, 67T)	1	88950136
	7-N28	13.347	FASTENER KIT, F/TOP CVR	98-02	Y67 (C05)	1	12369656
	7-N28	13.347	SHIELD, F/TOP STOW COMPT LID GLARE	98-02	Y67 (C05)	1	12369649
	7-N28	13.347	FASTENER KIT, F/TOP STOW COMPT LID GLARE SHLD	98-02	Y67 (C05)	1	12369650
7.	7-A6	14.340	BOW, F/TOP #5 SI	98-02	Y67 (C05)	1	12369630
	7-A6	14.340	FASTENER KIT, F/TOP #5 SI BOW	98-02	Y67 (C05)	1	12369631
8.	7-N9	10.710	RETAINER, FRT S/D WDO RR W/STR	98-99	Y67	RH	10252858
	7-N9	10.710	RETAINER, FRT S/D WDO RR W/STR	98-99	Y67	LH	10445410
	7-N9	10.710	RETAINER, FRT S/D WDO RR W/STR (USED ON VEHICLES WHERE FRONT END OF RETAINER IS SEALED TO REST OF RETAINER)	00	Y67 (1ST DES)	RH	10252858
	7-N9	10.710	RETAINER, FRT S/D WDO RR W/STR	00	Y67 (1ST DES)	LH	10445410
	7-N9	10.710	RETAINER, FRT S/D WDO RR W/STR	01-02	Y67	LH	10445410
	7-N9	10.710	RETAINER, FRT S/D WDO RR W/STR	01-02	Y67	RH	10445412
	7-N9	10.710	RETAINER, FRT S/D WDO RR W/STR (FLAT END ONE PIECE) (USED ON VEHICLES W/FRONT END OF RETAINER AS A SEPARATE PART THAT ATTACHES TO THE REST OF THE RETAINER W/BOLT/SCREWS)	00	Y67 (2ND DES)	LH	10445411

cardiagn.com

							1Y14--027
	7-N9	10.710	RETAINER, FRT S/D WDO RR W/STR (FLAT END ONE PIECE) (USED ON VEHICLES W/FRONT END OF RETAINER AS A SEPARATE PART THAT ATTACHES TO THE REST OF THE RETAINER W/BOLT/SCREWS)	00	Y67 (2ND DES)	RH	10445413
	7-N9	10.710	RETAINER, FRT S/D WDO RR W/STR (FLAT END ONE PIECE) ..	01-02	Y67	LH	10445411
	7-N9	10.710	RETAINER, FRT S/D WDO RR W/STR (FLAT END ONE PIECE) ..	01-02	Y67	RH	10445413
	7-N9	10.710	RETAINER, FRT S/D WDO RR W/STR (ONE PIECE CURVED) ...	00	Y67 (2ND DES)	LH	10445410
	7-N9	10.710	RETAINER, FRT S/D WDO RR W/STR (ONE PIECE CURVED) ...	00	Y67 (2ND DES)	RH	10445412
	7-N9	10.710	RETAINER, FRT S/D WDO RR W/STR (USE TOGETHER W/ P/N 10445410)	98-99	Y67	LH	10445411
	7-N9	10.710	RETAINER, FRT S/D WDO RR W/STR (USE TOGETHER W/ P/N 10445410)	00	Y67 (1ST DES)	LH	10445411
9.		8.913	SCREW PAN, M4.2X1.41X13, 8.15 OD, 6010M, 6138M, C/R, TAP, AB-PT (FRT S/D WDO RR W/STR RET)	98-02	Y	8	11519838
10.	7-N9	10.710	RETAINER, FRT S/D WDO RR W/STR (PUSH IN) (12.804)	99-02	Y67	2	20514862
	7-N9	10.710	RETAINER, FRT S/D WDO RR W/STR (PUSH IN) (UPR) (PAINT TO MATCH) (FITS .18 HOLE, .7 LG, .43 OD, NYLON) (14.630)	98	Y67	2	20540336
11.	7-N9	10.710	WEATHERSTRIP, FRT S/D WDO RR	98-02	Y67	LH	10415919
12.		8.913	SCREW PAN, M4.2X1.41X13, 8.15 OD, 6010M, 6138M, C/R, TAP, AB-PT (FRT S/D WDO UPR FRT W/STRP)	98-02	....	2	11519838
13.	7-N9	10.710	RETAINER, FRT S/D WDO UPR FRT W/STR	98-00	Y67	RH	10252854
	7-N9	10.710	RETAINER, FRT S/D WDO UPR FRT W/STR	98-02	Y67	LH	10308189
	7-N9	10.710	RETAINER, FRT S/D WDO UPR FRT W/STR	01-02	Y67	RH	10308190
14.		8.913	SCREW PAN, M4.2X1.41X13, 8.15 OD, 6010M, 6138M, C/R, TAP, AB-PT (FRT S/D WDO UPR RR)	98-02	Y	4	11519838
15.	7-N9	10.710	WEATHERSTRIP, FRT S/D WDO UPR FRT	98-02	Y67	LH	10236327
	7-N9	10.710	WEATHERSTRIP, FRT S/D WDO UPR FRT	98-02	Y67	RH	10236328
16.	7-A5	14.140	LINK, F/TOP #1 BOW	98-02	Y67 (C05)	RH	12369637
	7-A5	14.140	LINK, F/TOP #1 BOW	98-02	Y67 (C05)	LH	12369638
	7-A5	14.130	FASTENER KIT, F/TOP #1 BOW (14.340)	98-02	Y67 (C05)	1	12369625
	7-A5	14.140	FASTENER KIT, F/TOP FRT S/RL LINK	98-02	Y67 (C05)	1	12369639

cardiagn.com

							1Y14-027
17.	7-A5	14.100	RAIL, F/TOP SI	98-02	Y67 (C05)	RH	12369640
	7-A5	14.100	RAIL, F/TOP SI (14.140)	98-02	Y67 (C05)	LH	12369641
	7-A5	14.140	FASTENER KIT, F/TOP FRT S/RL LINK	98-02	Y67 (C05)	1	12369639
	7-A5	14.080	FASTENER KIT, F/TOP FRT S/RL & RR S/RL	98-02	Y67 (C05)	1	12369642
18.	7-A6	14.310	BRACKET, F/TOP PIV	98-02	Y67 (C05)	RH	12369643
	7-A6	14.310	BRACKET, F/TOP PIV	98-02	Y67 (C05)	LH	12369644
	7-A6	14.310	FASTENER KIT, F/TOP PIV BRKT	98-02	Y67 (C05)	1	12369645
	7-A6	14.260	WEATHERSTRIP, F/TOP RR S/RL	98-02	Y67 (C05)	1	12369632
	7-A6	14.340	FASTENER KIT, F/TOP RR W/STR	98-02	Y67 (C05)	1	12369633
19.	7-A5	14.170	RAIL, F/TOP RR SI	98-02	Y67 (C05)	RH	12369634
	7-A5	14.170	RAIL, F/TOP RR SI	98-02	Y67 (C05)	LH	12369635
	7-A5	14.170	FASTENER KIT, F/TOP S/RL	98-02	Y67 (C05)	1	12369636
20.	7-A5	14.102	CABLE, F/TOP CVR FRT SI TENS	98-02	Y67 (C05)	RH	12369657
	7-A5	14.102	CABLE, F/TOP CVR FRT SI TENS	98-02	Y67 (C05)	LH	12369658
	7-N28	13.347	FASTENER KIT, F/TOP CVR SI TENS CBL (14.102)	98-02	Y67 (C05)	1	12369659
	7-N28	13.347	STRAP, F/TOP FRM TENS	98-02	Y67 (C05)	RH	12369663
	7-N28	13.347	STRAP, F/TOP FRM TENS	98-02	Y67 (C05)	LH	12369673
21.	7-N9	10.710	WEATHERSTRIP, FRT S/D WDO UPR RR	98-02	Y67	LH	10236329
	7-N9	10.710	WEATHERSTRIP, FRT S/D WDO UPR RR	98-02	Y67	RH	10236330
22.	7-N8	10.695	RETAINER, FRT S/D WDO UPR RR W/STR (14.120)	98-02	Y67	LH	10252855
	7-N8	10.695	RETAINER, FRT S/D WDO UPR RR W/STR (14.120)	98-02	Y67	RH	10252856
23.	7-N8	10.703	CLIP, FRT S/D WDO W/STR RET (RF PNL RET ALUM)	98-02	Y67	2	10408012
24.		8.913	SCREW PAN, M4.2X1.41X13, 8.15 OD, 6010M, 6138M, C/R, TAP, AB-PT (FRT S/D WDO UPR FRT)	98-02		6	11519838
25.	7-A6	14.475	HANDLE, F/TOP ASST (12.810)	98-02	Y67 (C05)	LH	10449578
	7-A6	14.475	HANDLE, F/TOP ASST (12.810)	98-02	Y67 (C05)	RH	10449579
26.	7-A5	14.080	BOLT, R/TOP FRT LAT (12.810)	98-02	Y67 (C05, 16T, 67T)	4	10293378
27.	7-N24	12.811	COVER, RF LIFT OFF PNL/WDO LAT TR	98-02	Y67	2	10267173
28.	7-N28	13.347	PANEL, F/TOP HDLNG TR	01-02	YY67 (C05)	1	60950134
	7-N28	13.347	PANEL, F/TOP HDLNG TR (CVR) (14.640)	98-02	Y67 (C05)	1	12369651
	7-N28	13.347	FASTENER KIT, F/TOP HDLNG T/PNL CVR	98-02	Y67 (C05)	1	12369652
29.	7-A6	14.310	SPRING, F/TOP C/BAL	98-02	Y67 (C05)	RH	12369646
	7-A6	14.310	SPRING, F/TOP C/BAL	98-02	Y67 (C05)	LH	12369647
	7-A6	14.310	FASTENER KIT, F/TOP C/BAL SPR	98-02	Y67 (C05)	1	12369648

RPO DEFINITIONS
C05 – ROOF,CONVERTIBLE,FOLDING
16T – TOP COLOR BRITE WHITE (94)
41T – VINYL TOP COLOR,BLACK
67T – VINYL TOP COLOR,DARK ANTELOPE METALLIC

cardiagn.com

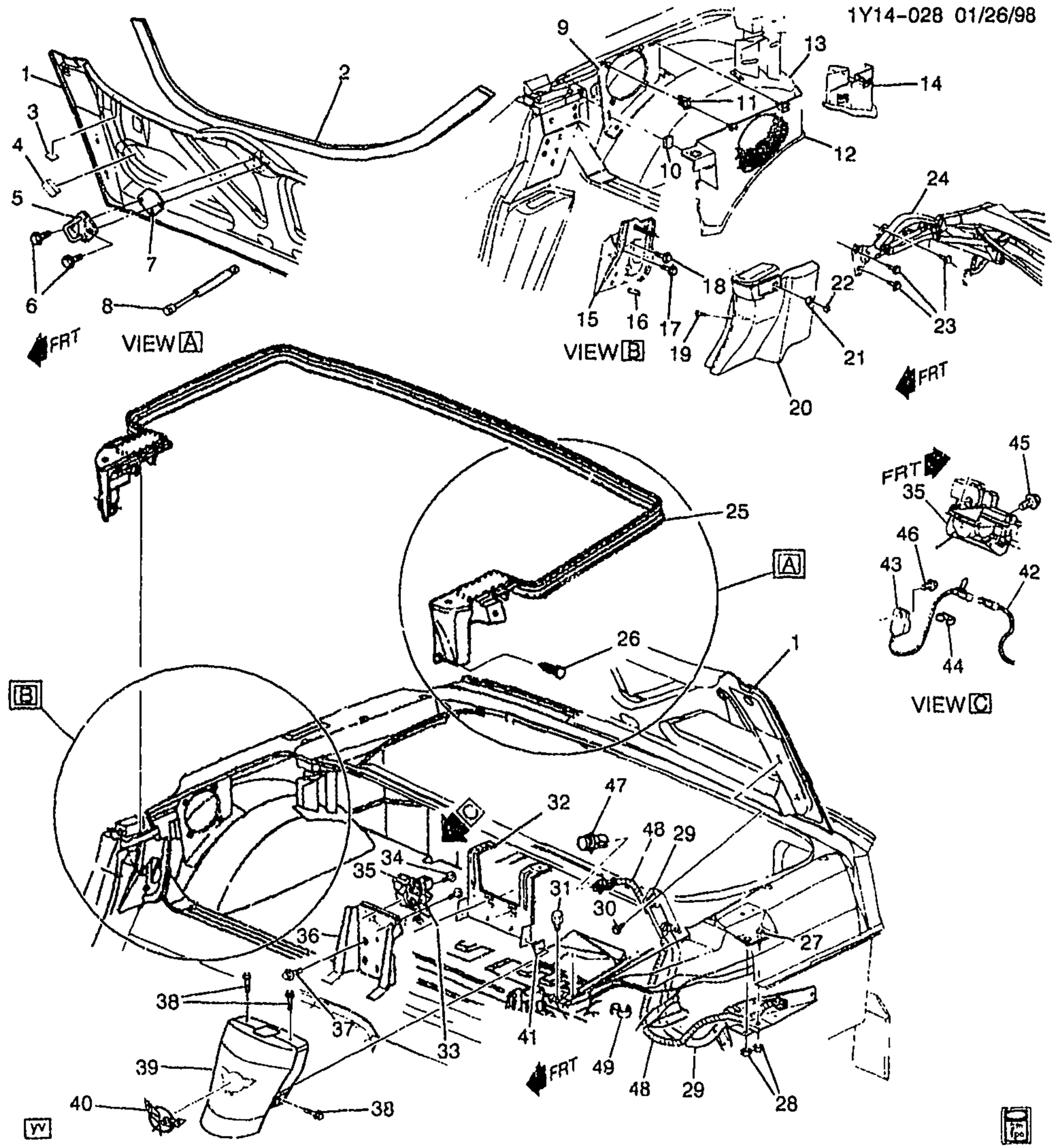

1Y14-028

1998 Y67 FOLDING TOP ASM/HARDWARE

1.	7-N20	12.170	LID, F/TOP STOW COMPT	98 Y67	1	10414341
2.	7-N20	12.170	PROTECTOR, F/TOP STOW COMPT LID	98 Y67	1	10279019
3.	7-N20	12.170	INSULATOR, F/TOP STOW FRT (PROCURE LOCALLY) (POSN #1)	.....	2	10308440

© 2001 GENERAL MOTORS SERVICE PARTS OPERATIONS-CHEVROLET-15Y

cardiagn.com

						1Y14–028	
4.	7–N20	12.170	INSULATOR, F/TOP STOW FRT (PROCURE LOCALLY) (POSN #2) (POS #2)			2	10404291
5.	7–N20	12.170	STRIKER, F/TOP STOW COMPT LID LAT	98	Y67	1	10275646
6.		8.900	SCREW, M6X1X30, 11 THD, 12.5 OD, 4.8, 6047M, P–PT (F/TOP STOW COMPT LID LAT STKR)	98		2	11508128
7.	7–N20	12.170	SHIM, F/TOP STOW COMPT LID	98	Y67	1	10400232
8.	7–N20	12.170	STRUT, F/TOP STOW COMPT LID	98	Y67	2	10275941
9.	7–N5	9.665	HOUSING, RDO RR SPKR	98	Y67	LH	10272205
	7–N5	9.665	HOUSING, RDO RR SPKR	98	Y67	RH	10272206
10.	7–N5	9.665	RETAINER, RDO RR SPKR GRL (PART OF 12) (13.0MM WIDE) (YELLOW) (U–BASE) (16.575)	98	Y67	4	15748479
11.	7–N5	9.665	RETAINER, RDO RR SPKR GRL (PART OF 12) (10.056)	98	Y67	2	16754704
12.	7–N5	9.665	GRILLE, RDO RR SPKR (INCLS 10, 11)	98	Y67	RH	10414162
	7–N5	9.665	GRILLE, RDO RR SPKR (INCLS 10, 11)	98	Y67	LH	10414163
13.	7–N25	12.981	SUPPORT, R/CMPT PNL FRM	98	Y67	RH	10408901
	7–N25	12.981	SUPPORT, R/CMPT PNL FRM	98	Y67	LH	10408902
	7–N25	12.981	RIVET, R/CMPT PNL (FRM SUPT) (1/4"DIA) (ALUMINIUM)	98	Y67	4	10407692
14.	7–C7	15.222	TRIM, R/CMPT PNL FRM SUPT	98	Y67	LH	10427806
	7–C7	15.222	TRIM, R/CMPT PNL FRM SUPT	98	Y67	RH	10427807
15.	7–A21	14.875	BRACKET, D/SEAT SHLDR BELT GDE	98	Y67	1	10402798
	7–A21	14.875	BRACKET, P/SEAT SHLDR BELT GDE	98	Y67	1	10402807
16.	7–A6	14.310	PIN, F/TOP PIV BRKT LOC	98	Y67	2	10293227
17.		8.900	BOLT, HEX W/CON WA (D/SEAT SHLDR BELT GDE BRKT) (POSN #1)	98		2	11517164
		8.900	BOLT, HEX W/CON WA (P/SEAT SHLDR BELT GDE BRKT) (POSN #1)	98		2	11517164
18.		8.900	BOLT, HEX W/CON WA (D/SEAT SHLDR BELT GDE BRKT) (POSN #2)	98		2	11517164
		8.900	BOLT, HEX W/CON WA (P/SEAT SHLDR BELT GDE BRKT) (POSN #2)	98		2	11517164
19.	7–A9	14.731	BOLT, BODY L/PLR UPR T/PNL (14MM SHLDR SCR)	98	Y67	2	10296863
20.	7–A9	14.731	PANEL, BODY L/PLR UPR TR (BLACK)	98	Y67	LH	10418408
	7–A9	14.731	PANEL, BODY L/PLR UPR TR (BLACK)	98	Y67	RH	10418409
21.	7–A7	14.645	SPACER, QTR UPR T/PNL	98	Y67	2	10408633
22.	7–A9	14.731	WASHER, BODY L/PLR T/PNL (12.2X26X3.38 8) (0.002)	98	Y67	2	459948
23.	7–A5	14.155	BOLT, F/TOP PIV BRKT (8.913)	98	Y67 (C05)	6	11516470
24.	7–N28	13.346	TOP, FLDG (BLACK)	98	Y67 (C05, 41T)	1	10445454

cardiagn.com

							1Y14-028
25.	7-N20	12.170	WEATHERSTRIP, F/TOP STOW COMPT LID	98	Y67	1	10444523
26.	7-N23	12.684	RETAINER, BODY L/PLR UPR SEAL (BLACK) (4.8 HOLE) (14.685)	98	Y67	2	20538173
27.	7-N20	12.170	PLATE, F/TOP STOW COMPT LID HGE ANC	98	Y67	LH	10279082
	7-N20	12.170	PLATE, F/TOP STOW COMPT LID HGE ANC	98	Y67	RH	10284586
		N.S.	STUD, F/TOP STOW COMPT LID HGE (PART OF PLATE)				11500398
28.		8.915	NUT, M8X1.25 (F/TOP STOW COMPT LID HGE)	98		4	11504914
		8.929	WASHER, METRIC HARDENED FLAT, 20.4MM OD	98		4	10000925
29.	7-N20	12.170	HINGE, F/TOP STOW COMPT LID	98	Y67	LH	10418263
	7-N20	12.170	HINGE, F/TOP STOW COMPT LID	98	Y67	RH	10418266
30.		8.900	BOLT, HEX W/WA, M8X1.25X20, 8.8, PC (F/TOP STOW COMPT LID HGE)	98		4	11504611
31.	7-N20	12.170	BUMPER, F/TOP STOW COMPT LID (POSN #1) (12.212)	98	Y67	2	10103036
32.	7-N20	12.170	BRACKET, F/TOP STOW COMPT EXTN PNL (INCLS 41)	98	Y67	1	10282643
33.		N.S.	CABLE, MANUAL RELEASE (ACTR C/LID LAT)				
34.		8.900	BOLT/SCREW, HEX W/FL WA 17 OD, M6X1X20, 9.8, 4345M, DOG PT (F/TOP STOW COMPT LID LAT)	98		2	11515704
35.	7-N20	12.170	LATCH, F/TOP STOW COMPT LID (W/ACTUATOR & LID AJAR SW) (INCLS 43)	98	Y67	1	10445389
	7-N20	12.170	CONNECTOR, SOL-F/TOP LAT REL ACTR (GRAY) (2-WAY F W/LEADS) (INDEX TAB CTR CAVITY A&B) (2.535) (AC-DELCO #PT217)	98	Y67	1	12101825
36.	7-N20	12.170	BRACKET, F/TOP STOW COMPT LID LAT	98	Y67	1	10404536
37.		8.900	BOLT/SCREW, HEX W/FL WA 17 OD, M6X1X20, 9.8, 4345M, DOG PT (POSN #1)	98		2	11515704
38.		8.977	SCREW, PAN HD TORX W/WA, M4.2X1.41X16, SST (F/TOP STOW COMPT EXTN PNL (POSN #2))	98		4	11508100
39.	7-N20	12.170	PANEL, F/TOP STOW COMPT EXTN OTR (WHITE)	98	Y67 (10U)	1	10284823
	7-N20	12.170	PANEL, F/TOP STOW COMPT EXTN OTR (WHITE)	98	Y67 (11U)	1	10284824
	7-N20	12.170	PANEL, F/TOP STOW COMPT EXTN OTR (BLUE)	98	Y67 (23U)	1	10284825
	7-N20	12.170	PANEL, F/TOP STOW COMPT EXTN OTR (BLACK)	98	Y67 (41U)	1	10284826

cardiagn.com

						1Y14–028	
	7–N20	12.170	PANEL, F/TOP STOW COMPT EXTN OTR (RED)	98	Y67 (53U)	1	10284827
	7–N20	12.170	PANEL, F/TOP STOW COMPT EXTN OTR (RED)	98	Y67 (70U)	1	10284830
	7–N20	12.170	PANEL, F/TOP STOW COMPT EXTN OTR (GREEN)	98	Y67 (87U)	1	10284831
	7–N20	12.170	PANEL, F/TOP STOW COMPT EXTN OTR (SILVER)	98	Y67 (13U)	1	10402183
	7–N20	12.170	PANEL, F/TOP STOW COMPT EXTN OTR (AMETHYST)	98	Y67 (95U)	1	10402184
	7–N20	12.170	PANEL, F/TOP STOW COMPT EXTN OTR (BLUE)	98	Y67 (21U)	1	10402821
	7–N20	12.170	PANEL, F/TOP STOW COMPT EXTN OTR (SUEDE)	98	Y67 (58U)	1	10404958
	7–N20	12.170	PANEL, F/TOP STOW COMPT EXTN OTR (BLUE)	98	Y67 (28U)	1	10421268
40.	7–N20	12.170	EMBLEM, F/TOP STOW CMPT EXTN OTR PNL	98	Y67	1	10282774
41.	7–N20	12.170	NUT, F/TOP STOW COMPT EXTN PNL (PART OF 32) (PUSH–IN 6.3 SQ HOLE) (NYLON) (11.175)	98	Y67	4	20350354
42.	7–N26	13.090	HARNESS, BODY FRT WRG (CPS)	98	Y67 (UZ6)	1	12189958
	7–N26	13.090	CONNECTOR, INLINE–TO F/TOP HARN (BLACK) (2–WAY M W/LEADS) (2.535) (AC–DELCO #PT103)	98	Y67	1	12085481
	7–N26	13.090	CONNECTOR, INLINE–TO F/TOP HARN (2–WAY F) (W/LEADS) (12.243) (AC–DELCO #PT533)	98	Y67	1	12125621
	7–N20	12.170	CONNECTOR, SOL–F/TOP LAT REL ACTR (GRAY) (2–WAY F W/LEADS) (INDEX TAB CTR CAVITY A&B) (2.535) (AC–DELCO #PT217)	98	Y67	1	12101825
	7–A6	14.483	CONNECTOR, SW–F/TOP FRT LAT ACTR (BLACK) (3–WAY F W/LEADS) (2.535) (AC–DELCO #PT256)	98	Y67 (UZ6)	1	12101864
43.	7–N22	12.243	SWITCH, R/CMPT LID AJAR IND (PART OF 35) (LOCATED ON LAT IN TRUNK) (AC–DELCO #D1459C)	98	Y67	1	16608046
	7–N22	12.243	CONNECTOR, SW–R/CMPT LID AJAR IND (BLACK) (3–WAY F W/LEADS) (2.535) (AC–DELCO #PT256)	98	Y67 (UZ6)	1	12101864
44.	7–N22	12.243	CLIP, R/CMPT LID LAT REL WRG HARN (F/TOP STOW CMPT LID LATCH)	98	Y67	1	16625936
	7–N22	12.243	CLIP, R/CMPT LID LAT REL WRG HARN (R/CMPT LID LATCH)	98	Y67	1	16625936
45.		8.977	SCREW, HEX W/FL WA, M4.8X1.6X13, BZ (R/CMPT LID REL SW) (F/TOP STOW LATCH) .	98	.....	2	11515440

cardiagn.com

							11/4-028
46.		8.977	SCREW, PAN HD C/R TAP M4.2X1.41X10 PC (R/CMPT LID REL SW) (F/TOP STOW LATCH) (AC-DELCO #11501265)	98	.....	1	11501265
47.	7-A6	14.483	SWITCH, F/TOP STOW COMPT LID REL (ROUND PUSHBUTTON) (12.243)	98	Y67	1	22528104
48.	7-N26	13.090	WIRE, CONV TOP	98	Y67	1	12130419
49.	7-A6	14.483	CLIP, F/TOP WRG HARN (4.205) .	98	Y67	2	10210511

RPO DEFINITIONS
C05 – ROOF,CONVERTIBLE,FOLDING
UZ6 – SPEAKER SYSTEM 6, QUAD FRT DR MTD, DUAL QTR MTD
10U – EXTERIOR COLOR,ARTIC WHITE
11U – EXTERIOR COLOR,PRIMARY WHITE
13U – EXTERIOR COLOR,SILVER METALLIC
21U – EXTERIOR COLOR,PRIMARY,RADAR PURPLE MET
23U – EXTERIOR COLOR,PRIMARY,BRIGHT BLUE
28U – EXTERIOR COLOR,PRIMARY,DK CLOISONNE BLUE MET
41T – VINYL TOP COLOR,BLACK
41U – EXTERIOR COLOR,PRIMARY,BLACK
53U – EXTERIOR COLOR,PRIMARY,LT TOREADOR RED
58U – EXTERIOR COLOR,PRIMARY,MED SUEDE MET
70U – EXTERIOR COLOR,TORCH RED
87U – EXTERIOR COLOR,PRIMARY,FAIRWAY GREEN
95U – EXTERIOR COLOR,PRIMARY,MAJESTIC AMETHYST METALLIC

cardiagn.com

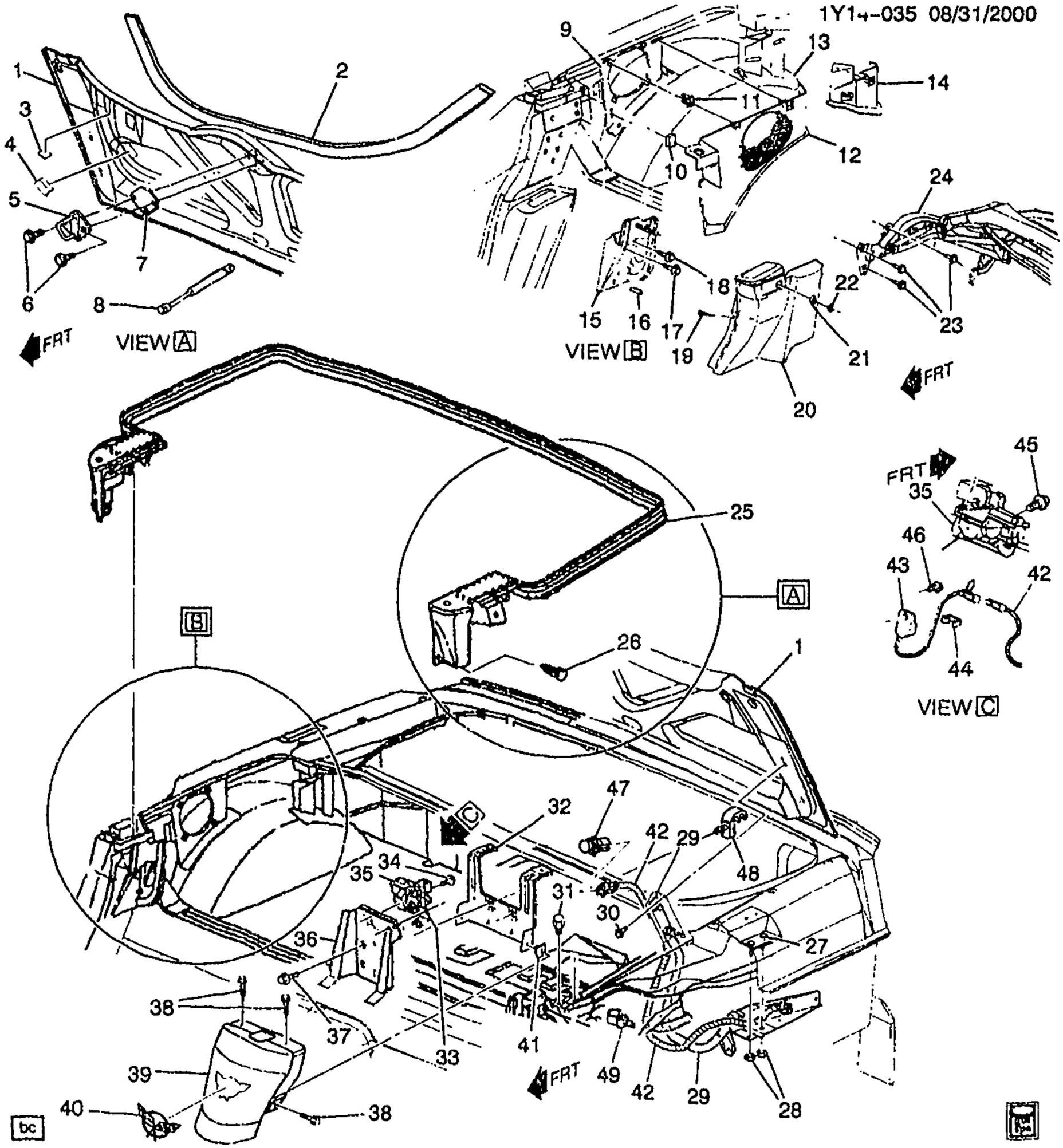

1Y14-035

1999 Y67 FOLDING TOP ASM/HARDWARE

1.	7-N20	12.170	LID, F/TOP STOW COMPT	99	Y67	1	10414341
2.	7-N20	12.170	PROTECTOR, F/TOP STOW COMPT LID	99	Y67	1	10279019
3.	7-N20	12.170	INSULATOR, F/TOP STOW FRT .	99	YY67	1	10308440
4.	7-N20	12.170	INSULATOR, F/TOP STOW FRT (POS #2)	99	YY67	1	10404291

cardiagn.com

							1Y14--035
5.	7-N20	12.170	STRIKER, F/TOP STOW COMPT LID LAT	99	Y67	1	10275646
6.		8.900	SCREW, M6X1X30, 11 THD, 12.5 OD, 4.8, 6047M, P-PT (F/TOP STOW COMPT LID LAT STKR)	99		2	11508128
7.	7-N20	12.170	SHIM, F/TOP STOW COMPT LID	99	Y67	1	10400232
8.	7-N20	12.170	STRUT, F/TOP STOW COMPT LID	99	Y67	2	10275941
9.	7-N5	9.665	HOUSING, RDO RR SPKR	99	Y67	LH	10272205
	7-N5	9.665	HOUSING, RDO RR SPKR	99	Y67	RH	10272206
10.	7-N5	9.665	RETAINER, RDO RR SPKR GRL (PART OF 12) (13.0MM WIDE) (YELLOW) (U-BASE) (16.575)	99	Y67	4	15748479
11.	7-N5	9.665	RETAINER, RDO RR SPKR GRL (PART OF 12) (10.056)	99	Y67	2	16754704
12.	7-N5	9.665	GRILLE, RDO RR SPKR (INCLS 10, 11)	99	Y67	RH	10414162
	7-N5	9.665	GRILLE, RDO RR SPKR (INCLS 10, 11)	99	Y67	LH	10414163
13.	7-N25	12.981	SUPPORT, R/CMPT PNL FRM	99	Y37-67	RH	10408901
	7-N25	12.981	SUPPORT, R/CMPT PNL FRM	99	Y37-67	LH	10408902
	7-N25	12.981	RIVET, R/CMPT PNL (FRM SUPT) (1/4"DIA) (ALUMINIUM)	99	Y67	4	10407692
14.	7-C7	15.222	TRIM, R/CMPT PNL FRM SUPT	99	Y67	LH	10427806
	7-C7	15.222	TRIM, R/CMPT PNL FRM SUPT	99	Y67	RH	10427807
15.	7-A21	14.875	BRACKET, D/SEAT SHLDR BELT GDE	99	Y67	1	10402798
	7-A21	14.875	BRACKET, P/SEAT SHLDR BELT GDE	99	Y67	1	10402807
16.	7-A6	14.310	PIN, F/TOP PIV BRKT LOC	99	Y67	2	10293227
17.		8.900	BOLT, HEX W/CON WA (D/SEAT SHLDR BELT GDE BRKT) (POSN #1)	99		2	11517164
		8.900	BOLT HEX W/CON WA (P/SEAT SHLDR BELT GDE BRKT) (POSN #1)	99		2	11517164
18.		8.900	BOLT, HEX W/CON WA (D/SEAT SHLDR BELT GDE BRKT) (POSN #2)	99		2	11517164
		8.900	BOLT, HEX W/CON WA (P/SEAT SHLDR BELT GDE BRKT) (POSN #2)	99		2	11517164
19.	7-A9	14.731	BOLT, BODY L/PLR UPR T/PNL (14MM SHLDR SCR)	99	Y67	2	10296863
20.	7-A9	14.731	PANEL, BODY L/PLR UPR TR (BLACK)	99	Y67	LH	10418408
	7-A9	14.731	PANEL, BODY L/PLR UPR TR (BLACK)	99	Y67	RH	10418409
21.	7-A7	14.645	SPACER, QTR UPR T/PNL	99	Y67	2	10408633
22.	7-A9	14.731	WASHER, BODY L/PLR T/PNL (12.2X26X3.38 8) (0.002)	99	Y67	2	459948
23.	7-A5	14.155	BOLT, F/TOP PIV BRKT (8.913)	99	Y67 (C05)	AR	11516470
24.	7-N28	13.346	TOP, FLDG (BLACK)	99	Y67 (C05, 41T)	1	10445454
25.	7-N20	12.170	WEATHERSTRIP, F/TOP STOW COMPT LID	99	Y67	1	10444523

cardiagn.com

							1114-035
26.	7-N23	12.684	RETAINER, BODY L/PLR UPR SEAL (BLACK) (4.8 HOLE) (14.685)	99	Y67	2	20538173
27.	7-N20	12.170	PLATE, F/TOP STOW COMPT LID HGE ANC	99	Y67	LH	10279082
	7-N20	12.170	PLATE, F/TOP STOW COMPT LID HGE ANC	99	Y67	RH	10284586
		N.S.	STUD, F/TOP STOW COMPT LID HGE (PART OF PLATE)				11500398
28.		8.915	NUT, M8X1.25 (F/TOP STOW COMPT LID HGE)	99		4	11504914
		8.929	WASHER, METRIC HARDENED FLAT, 20.4MM OD	99		4	10000925
29.	7-N20	12.170	HINGE, F/TOP STOW COMPT LID	99	Y67	LH	10418263
	7-N20	12.170	HINGE, F/TOP STOW COMPT LID	99	Y67	RH	10418266
30.		8.900	BOLT, HEX W/WA, M8X1.25X20, 8.8, PC (F/TOP STOW COMPT LID HGE)	99		4	11504611
31.	7-N20	12.170	BUMPER, F/TOP STOW COMPT LID (POSN #1) (12.212)	99	Y67	2	10103036
32.	7-N20	12.170	BRACKET, F/TOP STOW COMPT EXTN PNL (INCLS 41)	99	Y67	1	10282643
33.		N.S.	CABLE, MANUAL RELEASE (ACTR C/LID LAT)				
34.		8.900	BOLT/SCREW, HEX W/FL WA 17 OD, M6X1X20, 9.8, 4345M, DOG PT (F/TOP STOW COMPT LID LAT)	99		2	11515704
35.	7-N20	12.170	LATCH, F/TOP STOW COMPT LID (W/ACTUATOR & LID AJAR SW) (INCLS 43)	99	Y67	1	10445389
	7-N20	12.170	CONNECTOR, SOL-F/TOP LAT REL ACTR (GRAY) (2-WAY F W/LEADS) (INDEX TAB CTR CAVITY A&B) (2.535) (AC-DELCO #PT217)	99	Y67	1	12101825
36.	7-N20	12.170	BRACKET, F/TOP STOW COMPT LID LAT	99	Y67	1	10404536
37.		8.900	BOLT/SCREW, HEX W/FL WA 17 OD, M6X1X20, 9.8, 4345M, DOG PT (POSN #1)	99		2	11515704
38.		8.977	SCREW, PAN HD TORX W/WA, M4.2X1.41X16, SST (F/TOP STOW COMPT EXTN PNL (POSN #2))	99		4	11508100
39.	7-N20	12.170	PANEL, F/TOP STOW COMPT EXTN OTR (WHITE)	99	Y67 (10U)	1	10284823
	7-N20	12.170	PANEL, F/TOP STOW COMPT EXTN OTR (WHITE)	99	Y67 (11U)	1	10284824
	7-N20	12.170	PANEL, F/TOP STOW COMPT EXTN OTR (BLUE)	99	Y67 (23U)	1	10284825
	7-N20	12.170	PANEL, F/TOP STOW COMPT EXTN OTR (BLACK)	99	Y67 (41U)	1	10284826
	7-N20	12.170	PANEL, F/TOP STOW COMPT EXTN OTR (RED)	99	Y67 (70U)	1	10284830

cardiagn.com

	7-N20	12.170	PANEL, F/TOP STOW COMPT EXTN OTR (SILVER)	99	Y67 (13U)	1	10402183
	7-N20	12.170	PANEL, F/TOP STOW COMPT EXTN OTR (AMETHYST)	99	Y67 (95U)	1	10402184
	7-N20	12.170	PANEL, F/TOP STOW COMPT EXTN OTR (SUEDE)	99	Y67 (58U)	1	10404958
	7-N20	12.170	PANEL, F/TOP STOW COMPT EXTN OTR (BLUE)	99	Y67 (28U)	1	10421288
	7-N20	12.170	PANEL, F/TOP STOW COMPT EXTN OTR (RED)	99	Y67 (86U)	1	10298644
40.	7-N20	12.170	EMBLEM, F/TOP STOW CMPT EXTN OTR PNL	99	Y67	1	10282774
41.	7-N20	12.170	NUT, F/TOP STOW COMPT EXTN PNL (PART OF 32) (PUSH-IN 6.3 SQ HOLE) (NYLON) (11.175)	99	Y67	4	20350354
42.	7-N26	13.090	HARNESS, BODY FRT WRG (CPS)	99	Y67 (EXC U1S)	1	12189599
	7-N26	13.090	HARNESS, BODY FRT WRG (CPS)	99	Y67 (U1S)	1	12189962
	7-N26	13.090	CONNECTOR, INLINE-TO F/TOP HARN (2-WAY F) (W/LEADS) (12.243) (AC-DELCO #PT533)	99	Y67	1	12125621
	7-N20	12.170	CONNECTOR, SOL-F/TOP LAT REL ACTR (GRAY) (2-WAY F W/LEADS) (INDEX TAB CTR CAVITY A&B) (2.535) (AC-DELCO #PT217)	99	Y67	1	12101825
	7-A6	14.483	CONNECTOR, SW-F/TOP FRT LAT ACTR (BLACK) (3-WAY F W/LEADS) (2.535) (AC-DELCO #PT253)	99	Y67 (UZ6)	1	12101864
43.	7-N22	12.243	SWITCH, R/CMPT LID AJAR IND (PART OF 35) (LOCATED ON LAT IN TRUNK) (AC-DELCO #D1459C)	99	Y67	1	16608046
	7-N22	12.243	CONNECTOR, SW-R/CMPT LID AJAR IND (BLACK) (3-WAY F W/LEADS) (2.535) (AC-DELCO #PT256)	99	Y67 (UZ6)	1	12101864
	7-N22	12.243	CONNECTOR, SW-R/CMPT LID AJAR IND (3-WAY M W/LEADS) (2.530) (AC-DELCO #PT504)	99	Y67	2	12117371
44.	7-N22	12.243	CLIP, R/CMPT LID LAT REL WRG HARN (F/TOP STOW CMPT LID LATCH)	99	Y67	1	16625936
	7-N22	12.243	CLIP, R/CMPT LID LAT REL WRG HARN (R/CMPT LID LATCH)	99	Y67	1	16625936
45.		8.977	SCREW, HEX W/FL WA, M4.8X1.6X13, BZ (R/CMPT LID REL SW) (F/TOP STOW LATCH)	99		2	11515440
46.		8.977	SCREW, PAN HD C/R TAP M4.2X1.41X10 PC (R/CMPT LID REL SW) (F/TOP STOW LATCH) (AC-DELCO #11501265)	99		1	11501265
47.	7-A6	14.483	SWITCH, F/TOP STOW COMPT LID REL (ROUND PUSHBUTTON) (12.243)	99	Y67	1	22528104

cardiagn.com

					1Y14–035
48.	8.965	STRAP–TIE–7"ADJ (W/ROSEBUD FOR .25 DIA HOLE .031–.14 TH)	99	1	3816659
49.	N.S.	CLIP, F/TOP WRG HARN	.....		

RPO DEFINITIONS
C05 – ROOF,CONVERTIBLE,FOLDING
UZ6 – SPEAKER SYSTEM 6, QUAD FRT DR MTD, DUAL QTR MTD
U1S – PLAYER MULTIPLE COMPACT DISC
10U – EXTERIOR COLOR,ARTIC WHITE
11U – EXTERIOR COLOR,PRIMARY WHITE
13U – EXTERIOR COLOR,SILVER METALLIC
23U – EXTERIOR COLOR,PRIMARY,BRIGHT BLUE
28U – EXTERIOR COLOR,PRIMARY,DK CLOISONNE BLUE MET
41T – VINYL TOP COLOR,BLACK
41U – EXTERIOR COLOR,PRIMARY,BLACK
58U – EXTERIOR COLOR,PRIMARY,MED SUEDE MET
70U – EXTERIOR COLOR,TORCH RED
86U – PRIMARY COLOR – EXTERIOR,RED,TINT COAT,METALLIC
95U – EXTERIOR COLOR,PRIMARY,MAJESTIC AMETHYST METALLIC

cardiagn.com

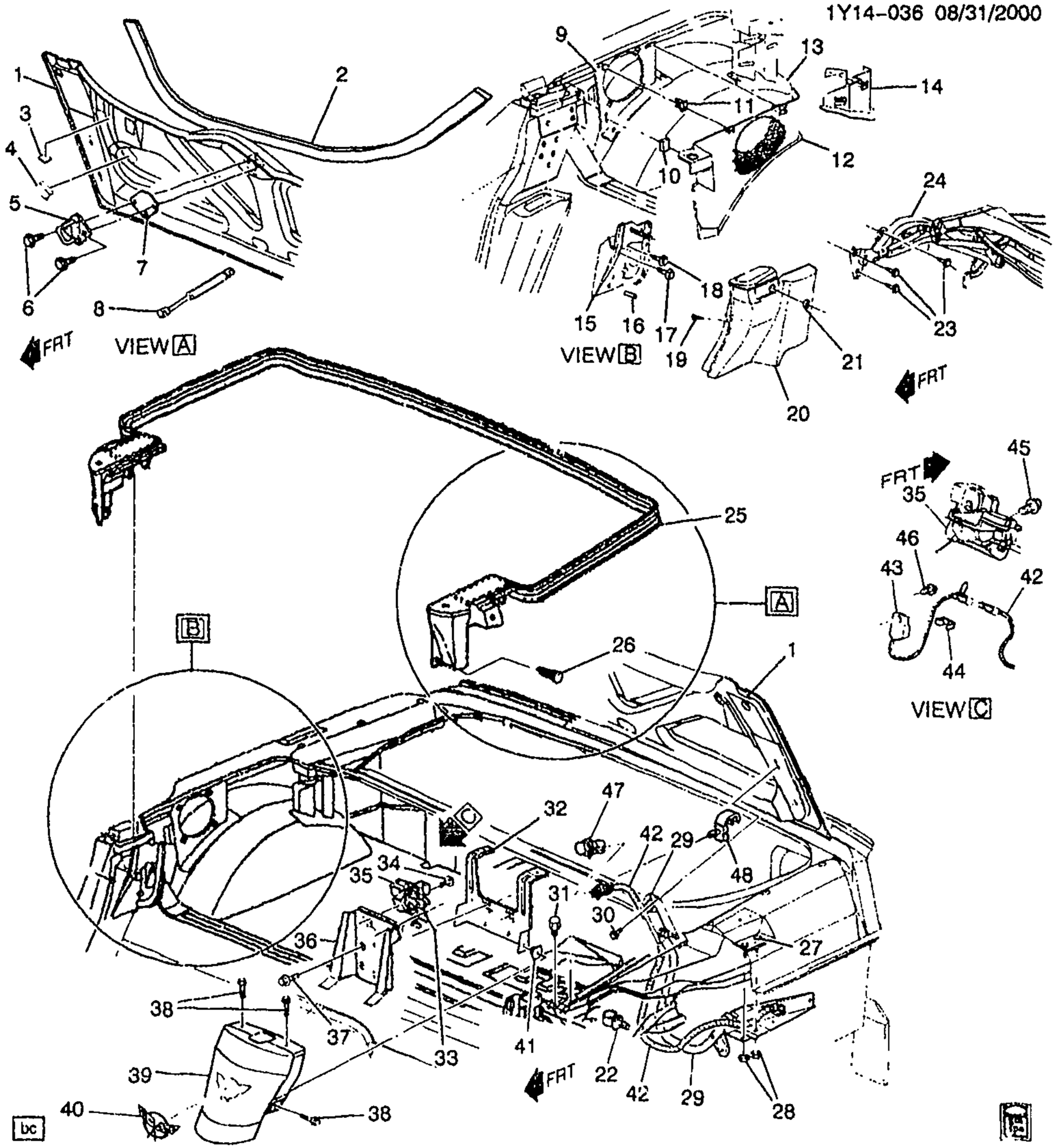

1Y14-036

2000-2002 Y67 FOLDING TOP ASM/HARDWARE

1.	7-N20	12.170	LID, F/TOP STOW COMPT	00-02 Y67	1	10414341
2.	7-N20	12.170	PROTECTOR, F/TOP STOW COMPT LID	00-02 Y67	1	10279019
3.	7-N20	12.170	INSULATOR, F/TOP STOW FRT (PROCURE LOCALLY) (POSN #1)	.....	2	10308440

cardiagn.com

4.	7-N20	12.170	INSULATOR, F/TOP STOW FRT (PROCURE LOCALLY) (POSN #2) (POS #2)			2	10404291
5.	7-N20	12.170	STRIKER, F/TOP STOW COMPT LID LAT	00-02	Y67	1	10275646
6.		8.900	SCREW, M6X1X30, 11 THD, 12.5 OD, 4.8, 6047M, P-PT (F/TOP STOW COMPT LID LAT STKR)	00-02		2	11508128
7.	7-N20	12.170	SHIM, F/TOP STOW COMPT LID	00-02	Y67	1	10400232
8.	7-N20	12.170	STRUT, F/TOP STOW COMPT LID	00-02	Y67	2	10275941
9.	7-N5	9.665	HOUSING, RDO RR SPKR	00-02	Y67	LH	10272205
	7-N5	9.665	HOUSING, RDO RR SPKR	00-02	Y67	RH	10272206
10.	7-N5	9.665	RETAINER, RDO RR SPKR GRL (PART OF 12) (13.0MM WIDE) (YELLOW) (U-BASE) (16.575)	00-02		4	15748479
11.	7-N5	9.665	RETAINER, RDO RR SPKR GRL (PART OF 12) (10.056)	00-02	Y67	2	16754704
12.	7-N5	9.665	GRILLE, RDO RR SPKR (INCLS 10, 11)	00-02	Y67	RH	10414162
	7-N5	9.665	GRILLE, RDO RR SPKR (INCLS 10, 11)	00-02	Y67	LH	10414163
13.	7-N25	12.981	SUPPORT, R/CMPT PNL FRM	00-02	Y37-67	RH	10408901
	7-N25	12.981	SUPPORT, R/CMPT PNL FRM	00-02	Y37-67	LH	10408902
	7-N25	12.981	RIVET, R/CMPT PNL (FRM SUPT) (1/4"DIA) (ALUMINIUM)	00-02	Y67	4	10407692
14.	7-C7	15.222	TRIM, R/CMPT PNL FRM SUPT	00-02	Y67	LH	10427806
	7-C7	15.222	TRIM, R/CMPT PNL FRM SUPT	00-02	Y67	RH	10427807
15.	7-A21	14.875	BRACKET, D/SEAT SHLDR BELT GDE	00-02	Y67	1	10402798
	7-A21	14.875	BRACKET, P/SEAT SHLDR BELT GDE	00-02	Y67	1	10402807
16.	7-A6	14.310	PIN, F/TOP PIV BRKT LOC	00-02	Y67	2	10293227
17.		8.900	BOLT, HEX W/CON WA (D/SEAT SHLDR BELT GDE BRKT) (POSN #1)	00-02		2	11517164
		8.900	BOLT, HEX W/CON WA (P/SEAT SHLDR BELT GDE BRKT) (POSN #1)	00-02		2	11517164
18.		8.900	BOLT, HEX W/CON WA (D/SEAT SHLDR BELT GDE BRKT) (POSN #2)	00-02		2	11517164
		8.900	BOLT, HEX W/CON WA (P/SEAT SHLDR BELT GDE BRKT) (POSN #2)	00-02		2	11517164
19.	7-A9	14.731	BOLT, BODY L/PLR UPR T/PNL (14MM SHLDR SCR)	00-02	Y67	2	10296863
20.	7-A9	14.731	PANEL, BODY L/PLR UPR TR (BLACK)	00-02	Y67	LH	10418408
	7-A9	14.731	PANEL, BODY L/PLR UPR TR (BLACK)	00-02	Y67	RH	10418409
21.	7-A7	14.645	SPACER, QTR UPR T/PNL	00-02	Y37	2	10408633
22.		N.S.	CLIP, F/TOP WRG HARN				
23.	7-A5	14.155	BOLT, F/TOP PIV BRKT (8.913)	00-02	Y67 (C05)	AR	11516470
	7-A5	14.155	BOLT, F/TOP PIV BRKT (M8X1.25X30) (8.900)	02	YY67 (C05)	6	11516594
24.	7-N28	13.346	TOP, FLDG (BLACK)	00	Y67 (C05 41T)	1	10445454

cardiagn.com

	7–N28	13.346	TOP, FLDG (BLACK)	01–02	Y67 (C05, 41T)	1	10306244
	7–N28	13.346	TOP, FLDG (METALLIC)	01–02	Y67 (C05, 67T)	1	10306245
	7–N28	13.346	TOP, FLDG (WHITE)	01–02	Y67 (C05, 16T)	1	10306246
25.	7–N20	12.170	WEATHERSTRIP, F/TOP STOW COMPT LID	00–02	Y67	1	10444523
26.	7–N23	12.684	RETAINER BODY L/PLR UPR SEAL (BLACK) (4.8 HOLE) (14.685)	00–02	Y67	2	20538173
27.	7–N20	12.170	PLATE, F/TOP STOW COMPT LID HGE ANC	00–02	Y67	LH	10279082
	7–N20	12.170	PLATE, F/TOP STOW COMPT LID HGE ANC	00–02	Y67	RH	10284586
		N.S.	STUD, F/TOP STOW COMPT LID HGE (PART OF PLATE)				11500398
28.		8.915	NUT, M8X1.25 (F/TOP STOW COMPT LID HGE)	00–02		4	11504914
		8.929	WASHER, METRIC HARDENED FLAT, 20.4MM OD	00–02		4	10000925
29.	7–N20	12.170	HINGE, F/TOP STOW COMPT LID	00–02	Y67	LH	10418263
	7–N20	12.170	HINGE, F/TOP STOW COMPT LID	00–02	Y67	RH	10418266
30.		8.900	BOLT, HEX W/WA, M8X1.25X20, 8.8, PC (F/TOP STOW COMPT LID HGE)	00–02		4	11504611
31.	7–N20	12.170	BUMPER, F/TOP STOW COMPT LID (POSN #1) (12.212)	00–02	Y67	2	10103036
32.	7–N20	12.170	BRACKET, F/TOP STOW COMPT EXTN PNL (INCLS 41)	00–02	Y67	1	10282643
33.		N.S.	CABLE, MANUAL RELEASE (ACTR C/LID LAT)				
34.		8.900	BOLT/SCREW, HEX W/FL WA 17 OD, M6X1X20, 9.8, 4345M, DOG PT (F/TOP STOW COMPT LID LAT)	00–02		2	11515704
35.	7–N20	12.170	LATCH, F/TOP STOW COMPT LID (W/ACTUATOR & LID AJAR SW) (INCLS 43)	00–02	Y67	1	10445389
	7–N20	12.170	CONNECTOR, SOL–F/TOP LAT REL ACTR (GRAY) (2–WAY F W/LEADS) (INDEX TAB CTR CAVITY A&B) (2.535) (AC–DELCO #PT217)	00–02	Y67	1	12101825
	7–N20	12.170	CONNECTOR, SOL–F/TOP LAT REL ACTR (BLACK) (2–WAY F W/LEADS) (2.535) (AC–DELCO #PT159)	01–02	Y	2	12101888
36.	7–N20	12.170	BRACKET, F/TOP STOW COMPT LID LAT	00–02	Y67	1	10404536
37.		8.900	BOLT/SCREW, HEX W/FL WA 17 OD, M6X1X20, 9.8, 4345M, DOG PT (POSN #1)	00–02		2	11515704
38.		8.977	SCREW, PAN HD TORX W/WA, M4.2X1.41X16, SST (F/TOP STOW COMPT EXTN PNL (POSN #2))	00–02		4	11508100
39.	7–N20	12.170	PANEL, F/TOP STOW COMPT EXTN OTR (WHITE)	00	Y67 (10U)	1	10284823

cardiagn.com

	7–N20	12.170	PANEL, F/TOP STOW COMPT EXTN OTR (WHITE)	00–02	Y67 (11U)	1	10284824
	7–N20	12.170	PANEL, F/TOP STOW COMPT EXTN OTR (BLUE)	00	Y67 (23U)	1	10284825
	7–N20	12.170	PANEL, F/TOP STOW COMPT EXTN OTR (BLACK)	00–02	Y67 (41U)	1	10284826
	7–N20	12.170	PANEL, F/TOP STOW COMPT EXTN OTR (RED)	00–02	Y67 (70U)	1	10284830
	7–N20	12.170	PANEL, F/TOP STOW COMPT EXTN OTR (SILVER)	00	Y67 (13U)	1	10402183
	7–N20	12.170	PANEL, F/TOP STOW COMPT EXTN OTR (BLUE)	00–01	Y67 (28U)	1	10421288
	7–N20	12.170	PANEL, F/TOP STOW COMPT EXTN OTR (YELLOW)	00–02	Y67 (79U)	1	10410618
	7–N20	12.170	PANEL, F/TOP STOW COMPT EXTN OTR (GREEN)	00–01	Y67 (91U)	1	10426575
	7–N20	12.170	PANEL, F/TOP STOW COMPT EXTN OTR (RED)	00–02	Y67 (86U)	1	10437434
	7–N20	12.170	PANEL, F/TOP STOW COMPT EXTN OTR (WHITE)	01–02	Y67 (40U)	1	10427429
	7–N20	12.170	PANEL, F/TOP STOW COMPT EXTN OTR (SILVER)	01–02	Y67 (12U)	1	10427447
	7–N20	12.170	PANEL, F/TOP STOW COMPT EXTN OTR (BLUE)	02	Y (21U)	1	10444464
40.	7–N20	12.170	EMBLEM, F/TOP STOW CMPT EXTN OTR PNL	00–02	Y67	1	10282774
41.	7–N20	12.170	NUT, F/TOP STOW COMPT EXTN PNL (PART OF 32) (PUSH–IN 6.3 SQ HOLE) (NYLON) (11.175)	00–01	Y67	4	20350354
	7–N20	12.170	NUT, F/TOP STOW COMPT EXTN PNL (PART OF 32) (UPLEVEL) (1.167)	00–02	Y67	4	347347
42.	7–N26	13.090	HARNESS, BODY FRT WRG (CPS)	00	Y67 (EXC U1S)	1	12189599
	7–N26	13.090	HARNESS, BODY FRT WRG (CPS)	00	Y67 (U1S)	1	12189962
	7–N26	13.090	HARNESS, BODY FRT WRG (CPS)	01–02	YY67 (UZ6) (EXC U1S)	1	15329386
	7–N26	13.090	HARNESS, BODY FRT WRG (CPS)	01–02	YY67 (UZ6, U1S)	1	15329387
	7–N26	13.090	CONNECTOR, INLINE–TO F/TOP HARN (2–WAY F) (W/LEADS) (12.243) (AC–DELCO #PT533)	00	Y67	1	12125621
	7–N26	13.090	CONNECTOR, INLINE–TO F/TOP HARN (2–WAY F) (W/LEADS) (12.243) (AC–DELCO #PT533)	01–02	YY67	1	12125621
	7–N20	12.170	CONNECTOR, SOL–F/TOP LAT REL ACTR (GRAY) (2–WAY F W/LEADS) (INDEX TAB CTR CAVITY A&B) (2.535) (AC–DELCO #PT217)	00–02	Y67	1	12101825
	7–N20	12.170	CONNECTOR, SOL–F/TOP LAT REL ACTR (BLACK) (2–WAY F W/LEADS) (2.535) (AC–DELCO #PT159)	01–02	Y	2	12101888

cardiagn.com

	7–A6	14.483	CONNECTOR, SW–F/TOP FRT LAT ACTR (BLACK) (3–WAY F W/LEADS) (2.535) (AC–DELCO #PT256)	00–02	Y67 (UZ6)	1	12101864
	7–A6	14.483	CONNECTOR, SW–F/TOP FRT LAT ACTR (2–WAY F) (W/LEADS) (12.243) (AC–DELCO #PT533) ..	01–02	YY67	1	12125621
43.	7–N22	12.243	SWITCH, R/CMPT LID AJAR IND (PART OF 35) (LOCATED ON LAT IN TRUNK) (AC–DELCO #D1459C)	00–02	Y67	1	16608046
	7–N22	12.243	CONNECTOR, SW–R/CMPT LID AJAR IND (BLACK) (3–WAY F W/LEADS) (2.535) (AC–DELCO #PT256)	00	Y67 (UZ6)	1	12101864
	7–N22	12.243	CONNECTOR, SW–R/CMPT LID AJAR IND (3–WAY M W/LEADS) (2.530) (AC–DELCO #PT504) ...	00	Y67	2	12117371
	7–N20	11.935	CONNECTOR, SW–DM LP (3–WAY M W/LEADS) (2.530) (AC–DELCO #PT504)	01	Y	2	12117371
44.	7–N22	12.243	CLIP, R/CMPT LID LAT REL WRG HARN (7" ADJ, W/ROSEBUD FOR .25 DIA HOLE .031–.14 TH) (8.965)	02	YY	1	3816659
	7–N22	12.243	CLIP, R/CMPT LID LAT REL WRG HARN (F/TOP STOW CMPT LID LATCH)	00–02	Y67	1	16625936
	7–N22	12.243	CLIP, R/CMPT LID LAT REL WRG HARN (R/CMPT LID LATCH)	00–02	Y67	1	16625936
45.		8.977	SCREW, HEX W/FL WA, M4.8X1.6X13, BZ (R/CMPT LID REL SW) (F/TOP STOW LATCH) .	00–02	.....	2	11515440
46.		8.977	SCREW, PAN HD C/R TAP M4.2X1.41X10 PC (R/CMPT LID REL SW) (F/TOP STOW LATCH) (AC–DELCO #11501265)	00–02	.....	1	11501265
47.	7–A6	14.483	SWITCH, F/TOP STOW COMPT LID REL (ROUND PUSHBUTTON) (12.243)	00–02	Y67	1	22528104
48.		8.965	STRAP–TIE–7"ADJ (W/ROSEBUD FOR .25 DIA HOLE .031–.14 TH)	00–02	.....	1	3816659

RPO DEFINITIONS
C05 – ROOF,CONVERTIBLE,FOLDING
UZ6 – SPEAKER SYSTEM 6, QUAD FRT DR MTD, DUAL QTR MTD
U1S – PLAYER MULTIPLE COMPACT DISC
10U – EXTERIOR COLOR,ARTIC WHITE
11U – EXTERIOR COLOR,PRIMARY WHITE
12U – EXTERIOR COLOR,PRIMARY,WHITE
13U – EXTERIOR COLOR,SILVER METALLIC
16T – TOP COLOR BRITE WHITE (94)
21U – EXTERIOR COLOR,MED MONTANA BLUE,MET
23U – EXTERIOR COLOR,PRIMARY,BRIGHT BLUE
28U – EXTERIOR COLOR,PRIMARY,DK CLOISONNE BLUE MET
40U – EXTERIOR COLOR,PRIMARY,WHITE
41T – VINYL TOP COLOR,BLACK
41U – EXTERIOR COLOR,PRIMARY,BLACK

cardiagn.com

70U – EXTERIOR COLOR,TORCH RED
79U -- PRIMARY COLOR – EXTERIOR,MYSTIC TEAL PEARL
86U – PRIMARY COLOR -- EXTERIOR,RED,TINT COAT,METALLIC
91U – EXTERIOR COLOR,PRIMARY,DARK POLO GREEN METALLIC

cardiagn.com

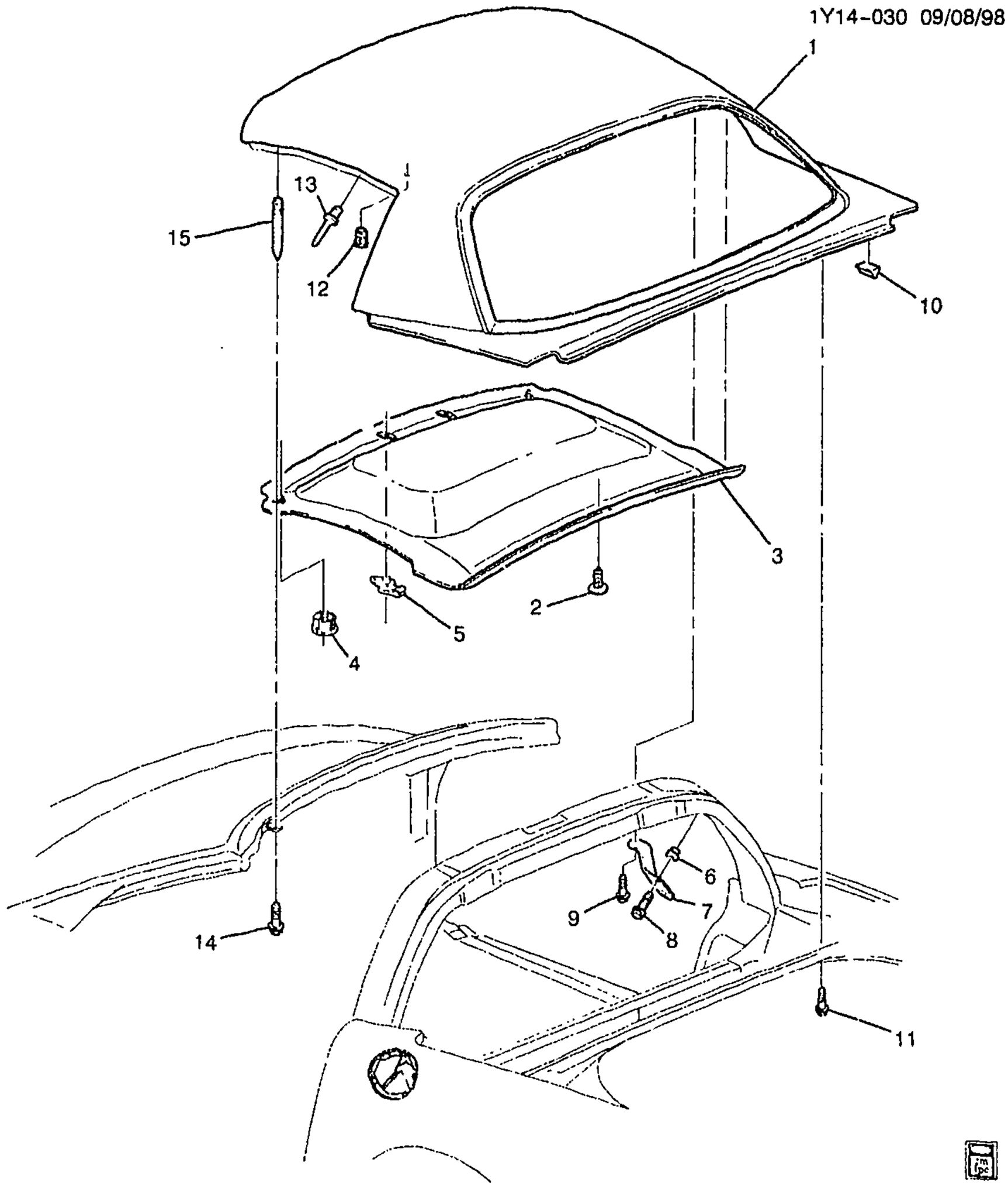

1Y14-030

1999-2001 Y37 ROOF HEADLINER

1.	7-N23	12.810	PANEL, RF (INCLS 12, 13)	99-01	Y37	1	10255235
		5.800	ADHESIVE KIT, GLASS (URETHANE) (BODY UPR RR PNL)	99-01	.....	1	12346392

cardiagn.com

							1Y14-030
2.	7-A6	14.640	RETAINER, HDLNG T/PNL (CHRISTMAS TREE STYLE FASTENER)	99	Y37 (1ST DES)	1	10292132
	7-A6	14.640	RETAINER, HDLNG T/PNL (8.153) (PUSH IN STYLE FASTENER)	99	Y37 (2ND DES)	1	14093088
	7-A6	14.640	RETAINER, HDLNG T/PNL (8.153)	00-01	Y37	1	14093088
3.	7-A6	14.640	PANEL, HDLNG TR	99-01	Y37	1	10253386
		N.S.	COVER, HDLNG TR FIN PNL				
4.	7-N6	10.219	BEZEL, S/S ROD (BLACK)	99-01	Y	LH	10431402
	7-N6	10.219	BEZEL, S/S ROD (BLACK)	99-01	Y	RH	10431403
5.	7-N6	10.219	RETAINER, S/S	99-01	Y	2	10411051
		8.800	ADHESIVE KIT, GLASS (URETHANE) (RF RR PNL ADHES)	99-01		1	12346392
6	7-N23	12.810	NUT, RF PNL RR BRKT (UPR RR M10")	99-01	Y37	4	10285255
7.	7-N23	12.810	BRACKET, RF PNL RR (UPR RR)	99-01	Y37	LH	10291419
	7-N23	12.810	BRACKET, RF PNL RR (UPR RR)	99-01	Y37	RH	10291420
8.	7-N23	12.810	BOLT, RF PNL RR BRKT (UPR RR M10" INTO RF BOW) (HEX M10X1.5X28) (16.545)	99-01	Y37	4	15567059
9.		8.900	SCREW, HEX M6X1X25 W/CON WA 9.8 POR (RF PNL RR BRKT) ("UPR RR M6" INTO RF PNL)	99-01		2	11503982
10.	7-N23	12.810	SPACER, RF PNL (NEUTRAL) (6.5MM) (10.027)	99-01	Y	2	10127825
	7-N23	12.810	SPACER, RF PNL	00	Y37	2	10445128
11.		8.900	SCREW, HEX M6X1X25 W/CON WA 9.8 POR (BODY UPR RR PNL) ("LWR RR" ATTACHES TO RF PNL)	99-01		3	11503982
12.		8.917	NUT-M6X1, 15.87 OD (RF PNL) (PART OF 1) (14.686)	99-01		7	10258563
13.		8.967	RIVET-3/16X.430, STYLE 1C (RF FRT PNL ATCH) (PART OF 1)	99-01		8	9440392
14.		8.900	SCREW, HEX M6X1X25 W/CON WA 9.8 POR (RF PNL BRKT) ("UPR FRT" ATTACHES TO RF PNL)	99-01		2	11503982
15.		N.S.	PIN, RF LOCATING				

cardiagn.com

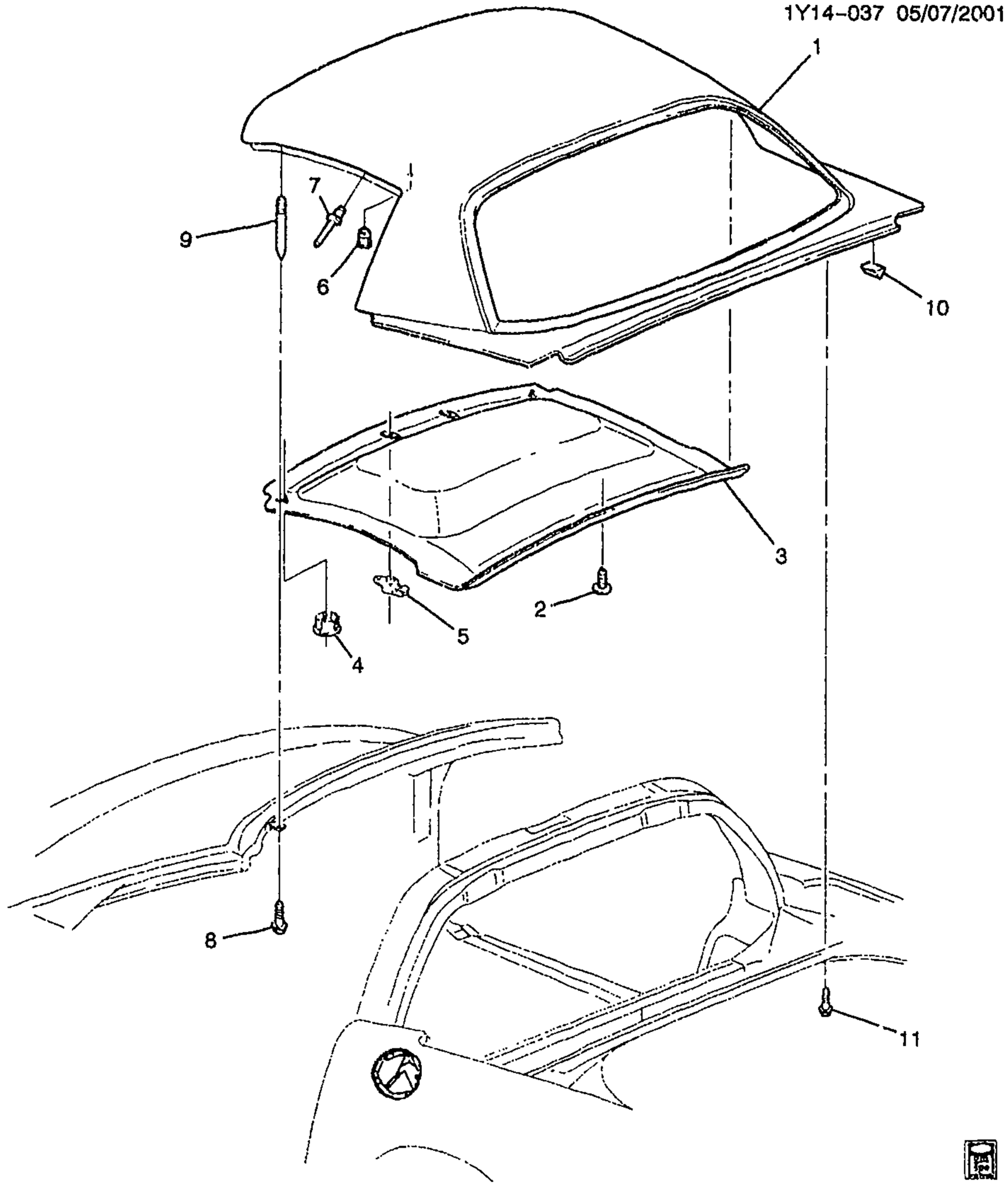

bc

1Y14-037

2002 Y37 ROOF HEADLINER

1.	7-N23	12.810	PANEL, RF (INCLS 6, 7)	02	Y37	1	10255235
		8.800	ADHESIVE KIT, GLASS (URETHANE) (BODY UPR RR PNL)	02	.....	1	12346392
2.	7-A6	14.640	RETAINER, HDLNG T/PNL (8.153)	02	Y37	1	14093088

cardiagn.com

							1Y14-037
3.	7-A6	14.640	PANEL, HDLNG TR	02	Y37	1	10253386
		N.S.	COVER, HDLNG TR FIN PNL		.....		
4.	7-N6	10.219	BEZEL, S/S ROD (BLACK)	02	Y	LH	10431402
	7-N6	10.219	BEZEL, S/S ROD (BLACK)	02	Y	RH	10431403
5.	7-N6	10.219	RETAINER, S/S	02	Y	2	10411051
		8.800	ADHESIVE KIT, GLASS (URETHANE) (RF RR PNL ADHES)	02	.....	1	12346392
6.		8.917	NUT-M6X1. 15.87 OD (RF PNL) (PART OF 1) (14.686)	02	.....	7	10258563
7.		8.967	RIVET-3/16X.430, STYLE 1C (RF FRT PNL ATCH) (PART OF 1)	02	.....	8	9440392
8.		8.900	SCREW, HEX M6X1X25 W/CON WA 9.8 POR (RF PNL BRKT) ("UPR FRT" ATTACHES TO RF PNL)	02	.....	2	11503982
9.		N.S.	PIN, RF LOCATING		.....		
10.	7-N23	12.810	SPACER, RF PNL (NEUTRAL) (6.5MM) (10.027)	02	Y	2	10127825
11.		8.900	SCREW, HEX M6X1X25 W/CON WA 9.8 POR (BODY UPR RR PNL) ("LWR RR" ATTACHES TO RF PNL)	02	.....	3	11503982

cardiagn.com

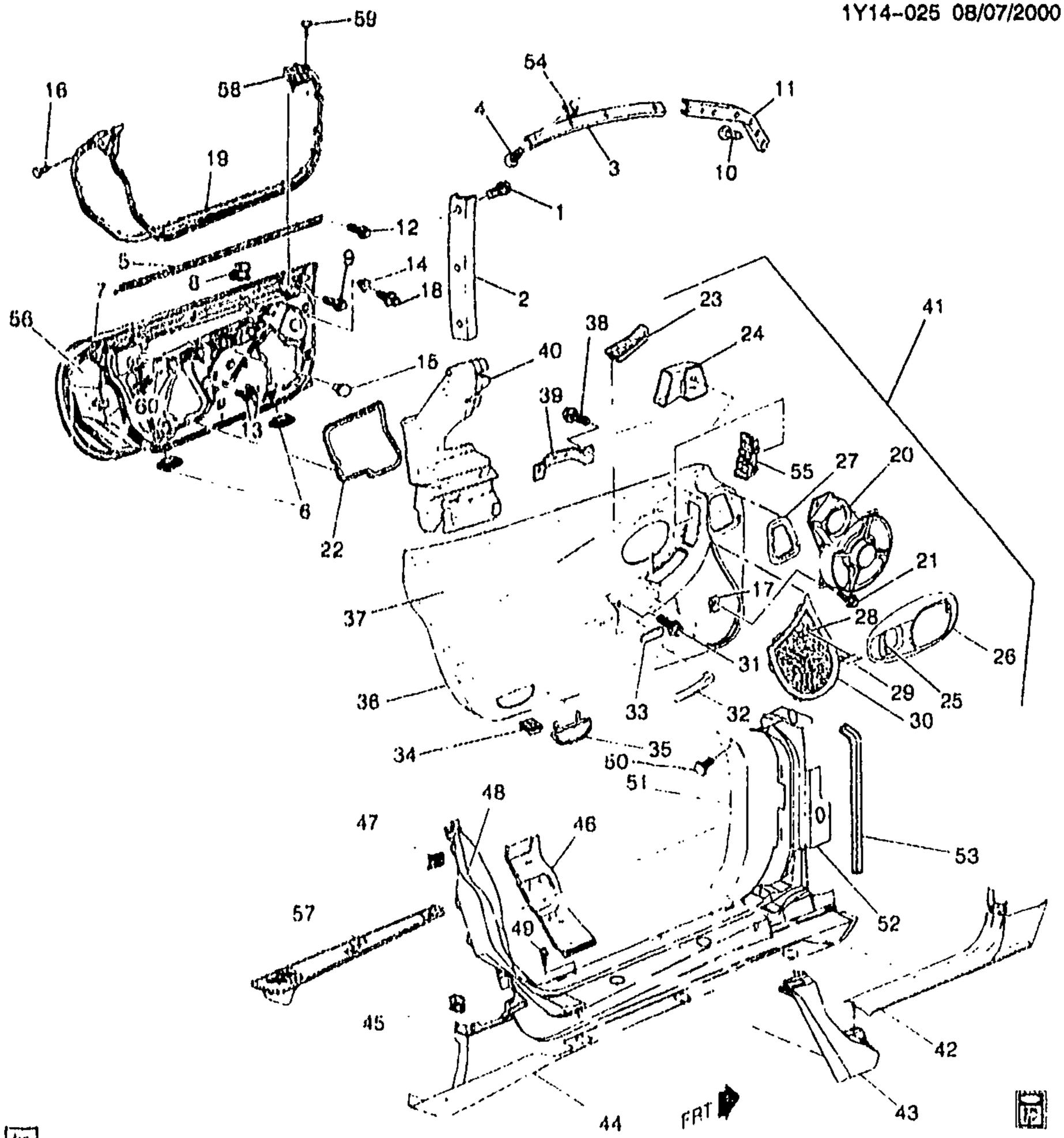

1Y14-025

1997 Y07 TRIM/FRONT DOOR & SEALING

1.		8.077	BOLT, RD CROWNED WA HD C/R M4.2X1.41X16POR (RET) ...	97	.....	6	11608231
2.	7-N0	10.710	RETAINER, FRT S/D WDO RR W/STR	97	Y07	LH	10299393
	7-N0	10.710	RETAINER, FRT S/D WDO RR W/STR	97	Y07	RH	10299394

2001 GENERAL MOTORS SERVICE PARTS OPERATIONS CHEVROLET 15Y

cardiagn.com

							1Y14-025
3.	7-N9	10.710	RETAINER, FRT S/D WDO UPR W/STR (RF PNL RET ALUM)	97	Y07 (CC3, CF7)	LH	10252849
	7-N9	10.710	RETAINER, FRT S/D WDO UPR W/STR (RF PNL RET ALUM)	97	Y07 (C2L)	LH	10252849
	7-N9	10.710	RETAINER, FRT S/D WDO UPR W/STR (RF PNL RET ALUM) (NON ENCAPSULATED)	97	Y07 (CC3, CF7)	RH	10252850
	7-N9	10.710	RETAINER, FRT S/D WDO UPR W/STR (RF PNL RET ALUM) (NON ENCAPSULATED)	97	Y07 (C2L)	RH	10252850
4.		8.977	BOLT, RD CROWNED WA HD C/R M4.2X1.41X16POR (FRT S/D WDO UPR W/STR RET) (W/C2L) .	97	.....	16	11508231
		8.977	BOLT, RD CROWNED WA HD C/R M4.2X1.41X16POR (FRT S/D WDO UPR W/STR RET) (W/CC3/CF7)	97	.....	8	11508231
5.	7-N9	10.710	SEALING STRIP, FRT S/D WDO OTR	97	Y07	RH	10252880
6.	7-N8	10.587	PLUG, FRT S/D INR PNL HOLE (POSN #1-6) (FITS 54.1MM HOLE) (RECTANGULAR)	97	Y	4	10283990
7.	7-N24	12.895	PANEL, FRT S/D OTR	97	Y	LH	12529725
8.	7-A7	14.683	CLIP, FRT S/D TR RET	97	Y	6	884154
9.		8.908	SCR LGE WASHER HEAD HI-LO BHL (FRT S/D T/PNL) (8.977)	97	.....	3	11509231
10.		8.977	BOLT, RD CROWNED WA HD C/R M4.2X1.41X16POR (FRT S/D WDO FRT W/STR RET)	97	.....	10	11508231
11.	7-N9	10.710	RETAINER, FRT S/D WDO FRT W/STR	97	Y07	LH	10252847
	7-N9	10.710	RETAINER, FRT S/D WDO FRT W/STR	97	Y07	RH	10252848
12.		8.908	SCR LGE WASHER HEAD HI-LO BHL (FRT S/D WDO OTR S/STR) (8.977)	97	.....	2	11509231
13.	7-A7	14.683	NUT, FRT S/D TR PNL	97	Y	4	10403545
14.	7-A7	14.683	GROMMET, FRT S/D TR RET	97	Y	12	10291930
15.	7-N8	10.587	PLUG, FRT S/D INR PNL HOLE (POSN #7, 8) (FITS 23.1MM HOLE) (ROUND)	97	Y	4	10288134
16.	7-N8	10.694	RETAINER, FRT S/D W/STR (PAINT TO MATCH) (FITS .18 HOLE, .7 LG, .43 OD, NYLON) (14.630)	97	Y	6	20540336
17.		8.921	NUT, U TYPE, MULTI THD, PREV TORQ, M4.2X1.41TAP, 8.1REACH, 0.65-3.80 PNLS 1065 PZOR (RDC FRT SPKR) (AC-DELCO #11513599)	97	.....	12	11513599
18.	7-A7	14.683	RETAINER, FRT S/D TR (MALE) .	97	Y	6	10291929
19.	7-N8	10.694	WEATHERSTRIP, FRT S/D (EPDM COMBINATION) (INCLS 58)	97	Y	LH	10302723
	7-N8	10.694	WEATHERSTRIP, FRT S/D (EPDM COMBINATION) (INCLS 58)	97	Y	RH	10302724

cardiagn.com

							1Y14-025
20.	7-N4	9.650	SPEAKER, RDO FRT (3"TWIDDLER, 7"WOOFER, 100W AMP) (AC-DELCO #10447355) .	97	Y (UZ6)	2	10447355
21.		8.977	SCREW, HEX W/FL WA M4.2X2.25X20 TAP POR (RDO FRT SPKR)	97	.....	12	11508443
22.	7-N7	10.355	DEFLECTOR, FRT S/D WAT	97	Y	LH	10263411
	7-N7	10.355	DEFLECTOR, FRT S/D WAT	97	Y	RH	10263412
23.	7-N11	10.777	SWITCH, SI WDO	97	Y	RH	12135165
	7-N11	10.777	SWITCH, SI WDO (SNAP FIT ASM) (DRIVER) (W/POWER MIRRORS W/MEMORY W/DOOR LOCKS))	97	Y07 (AAB)	LH	12135166
	7-N11	10.777	SWITCH, SI WDO (SNAP FIT ASM) (DRIVER) (W/POWER MIRRORS W/MEMORY W/DOOR LOCKS)) (& MIRRORS & DR LK) .	97	Y07 (EXC AAB)	LH	12135167
24.	7-N3	9.262	DUCT, FRT S/D AIR	97	Y07 (UZ6)	LH	10267874
25.	7-N8	10.512	HANDLE, FRT S/D I/S	97	Y	LH	10406533
	7-N8	10.512	HANDLE, FRT S/D I/S	97	Y	RH	10406534
26.	7-N8	10.515	BEZEL, FRT S/D I/S HDL	97	Y	LH	10406531
	7-N8	10.515	BEZEL, FRT S/D I/S HDL	97	Y	RH	10406532
27.	7-N3	9.262	SEAL, FRT S/D AIR DUCT	97	Y07 (UZ6)	LH	10267885
28.	7-N5	9.665	SCREEN, RDO FRT S/D SPKR ...	97	Y	LH	10291755
	7-N5	9.665	SCREEN, RDO FRT S/D SPKR ...	97	Y	RH	10291756
29.	7-N5	9.665	EMBLEM, RDO FRT S/D SPKR GRL	97	Y (UZ6)	2	10291759
30.	7-N5	9.665	GRILLE, RDO FRT S/D SPKR (PART OF 41) (BLACK)	97	Y (UZ6, 19I)	RH	10274045
	7-N5	9.665	GRILLE, RDO FRT S/D SPKR (PART OF 41) (BLACK)	97	Y (UZ6, 19I)	LH	10274046
	7-N5	9.665	GRILLE, RDO FRT S/D SPKR (PART OF 41) (PEWTER)	97	Y (UZ6, 92I)	RH	10274047
	7-N5	9.665	GRILLE, RDO FRT S/D SPKR (PART OF 41) (PEWTER)	97	Y (UZ6, 92I)	LH	10274048
	7-N5	9.665	GRILLE, RDO FRT S/D SPKR (PART OF 41) (RED)	97	Y (94I)	RH	10274049
	7-N5	9.665	GRILLE, RDO FRT S/D SPKR (PART OF 41) (RED)	97	Y (94I)	LH	10274050
31.	7-A7	14.683	BOLT, FRT S/D T/PNL (12.810) ..	97	Y	4	10293378
32.	7-A9	14.691	HANDLE, FRT S/D PULL	97	Y	RH	22640132
	7-A9	14.691	HANDLE, FRT S/D PULL	97	Y	LH	22640133
33.	7-A9	14.691	PLUG, FRT S/D PULL HDL FIN ..	97	Y	2	10279471
34.	7-A8	14.688	RETAINER, FRT S/D WRNG REFL (PART OF 35) (GREEN) (10.240) (AC-DELCO #10038190)	97	Y	2	10038190
35.	7-A9	14.691	REFLECTOR, FRT S/D WRNG (CPS) (INCLS 34)	97	Y	2	10295148
36.		N.S.	PANEL, FRT S/D LWR TR		.....		
37.		N.S.	PANEL, FRT S/D UPR TR		.....		
38.		8.900	BOLT, M6X1X12, 9THD, 10 OD, 8.8, PO, MACH, HDR-PT, TORX DR (FRT S/D PULL HDL) (14.691)	97	....	2	10282678
39.	7-A9	14.691	BRACKET, FRT S/D PULL HDL ..	97	Y	LH	10267883
	7-A9	14.691	BRACKET, FRT S/D PULL HDL ..	97	Y	RH	10281822

cardiagn.com

						1Y14-025	
40.		8.800	PAD, SOUND DEADENING (APPROX 195MMX495MM) (MAY BE TRIMMED TO FIT) (FRT S/D INR PNL UPR ENGY ABS) (CONSISTS OF 4 SELF-ADHESIVE PADS)	97	1	12378195
41.	7-A8	14.685	TRIM, FRT S/D (CPS) (INCLS 30) (BLACK) (INCLUDES FRT S/D INNER SEALING STRIP)	97 Y (UZ6, 19I)	LH	10420164
	7-A8	14.685	TRIM, FRT S/D (CPS) (INCLS 30) (RED) (INCLUDES FRT S/D INNER SEALING STRIP)	97 Y (UZ6, 94I)	LH	10420170
	7-A8	14.685	TRIM, FRT S/D (CPS) (INCLS 30) (RED) (INCLUDES FRT S/D INNER SEALING STRIP)	97 Y (UZ6, 94I)	RH	10420171
	7-A8	14.685	TRIM, FRT S/D (CPS) (INCLS 30) (BLACK) (INCLS INNER SEALING STRIP)	97 Y (UZ6, 19I)	RH	10441489
	7-A8	14.685	TRIM, FRT S/D (CPS) (INCLS 30) (PEWTER) (INCLS INNER SEALING STRIP)	97 Y (UZ6, 92I)	RH	10441491
	7-A8	14.685	TRIM, FRT S/D (CPS) (INCLS 30) (PEWTER) (INCLS INNER SEALING STRIP)	97 Y (UZ6, 92I)	LH	10441492
42.	7-N11	11.175	PLATE, FRT S/D SILL TR (RED) ..	97 Y (94I)	LH	10272389
	7-N11	11.175	PLATE, FRT S/D SILL TR (RED) ..	97 Y (94I)	RH	10272390
	7-N11	11.175	PLATE, FRT S/D SILL TR (BLACK)	97 Y (19I)	LH	10430855
	7-N11	11.175	PLATE, FRT S/D SILL TR (BLACK)	97 Y (19I)	RH	10430856
	7-N11	11.175	PLATE, FRT S/D SILL TR (PEWTER)	97 Y (92I)	LH	10430857
	7-N11	11.175	PLATE, FRT S/D SILL TR (PEWTER)	97 Y (92I)	RH	10430858
43.	7-A9	14.731	PANEL, BODY L/PLR TR (BLACK)	97 Y (19I)	LH	10258547
	7-A9	14.731	PANEL, BODY L/PLR TR (PEWTER)	97 Y07 (92I)	RH	10272394
	7-A9	14.731	PANEL, BODY L/PLR TR (RED) ..	97 Y (94I)	LH	10272395
	7-A9	14.731	PANEL, BODY L/PLR TR (BLACK)	97 Y (19I)	RH	10426020
	7-A9	14.731	PANEL, BODY L/PLR TR (PEWTER)	97 Y07 (92I)	LH	10426021
	7-A9	14.731	PANEL, BODY L/PLR TR (RED) ..	97 Y (94I)	RH	10426024
44.		N.S.	PANEL, FRT S/D OPG FIN (INCLS 48, 52)	.....		
45.		8.921	NUT, U TYPE, MULTI THD, PREV TORQ, M4.2X1.41TAP, 8.1REACH, 0.65-3.80 PNLS 1065 PZOR (FRT S/D OPG FIN PNL) (POSN #2) (AC-DELCO #11513599) ...	97	2	11513599
46.	7-N24	12.944	PANEL, BODY L/PLR INR (#55) (12.942)	97 Y07	RH	12458932
	7-N24	12.944	PANEL, BODY L/PLR INR (#55) (12.942)	97 Y07	LH	12458933
47.	7-A7	14.665	NUT, FRT S/D OPG FIN PNL (RING TO QTR PNL JOINT) (POSN #1) (12.942)	97 Y	6	10277883
48.	7-A7	14.665	PANEL, FRT S/D OPG FIN (LWR) (PART OF 44)	97 Y	LH	10444701

cardiagn.com

							1Y14-025
	7-A7	14.665	PANEL, FRT S/D OPG FIN (LWR) (PART OF 44)	97	Y	RH	10444702
49.		8.977	SCREW, LG RD HD TORX TAP M4.2X1.41X20 SS BL OX (FRT S/D OPG FIN PNL)	97		4	16751144
50.	7-N6	10.056	RETAINER, W/S SI G/MLDG (PAINT TO MATCH) (FITS .18 HOLE, .7 LG, .43 OD, NYLON) (14.630)	97	Y	2	20540336
51.	7-C6	15.100	MOLDING, BODY SI FRT GARN (BLACK)	97	Y	LH	10274637
	7-C6	15.100	MOLDING, BODY SI FRT GARN (BLACK)	97	Y	RH	10274636
52.	7-A7	14.665	PANEL, FRT S/D OPG FIN (UPR) (PART OF 44) (12.942)	97	Y	LH	10418921
	7-A7	14.665	PANEL, FRT S/D OPG FIN (UPR) (PART OF 44) (12.942)	97	Y	RH	10418922
53.		N.S.	SEALING STRIP, FRT S/D OPG FIN PNL				
54.	7-N8	10.703	CLIP, FRT S/D WDO W/STR RET	97	Y07 (CC3, CF7)	2	10408012
	7-N8	10.703	CLIP, FRT S/D WDO W/STR RET (RF PNL RET ALUM)	97	Y07 (C2L)	4	10408012
55.	7-N3	9.262	OUTLET, FRT S/D FRT AIR	97	Y (UZ6)	LH	10406518
56.	7-N7	10.351	DOOR, FRT SI (CPS)	97	Y	LH	10414235
	7-N7	10.351	DOOR, FRT SI (CPS)	97	Y	RH	10414236
		8.917	NUT-METRIC ALL METAL CIR'L PRVG TORG TENS (FRT S/D OTR PNL BAR)	97		2	11516077
57.	7-N11	11.175	PLATE, FRT S/D SILL TR (LOW GLOSS BLACK) (CORVETTE CROSSED FLAG LOGO)	97	Y	LH	10420975
	7-N11	11.175	PLATE, FRT S/D SILL TR (LOW GLOSS BLACK) (CORVETTE CROSSED FLAG LOGO)	97	Y	RH	10420976
58.	7-N8	10.694	RETAINER, FRT S/D W/STR (PART OF 19) (PAINT TO MATCH) (FITS .18 HOLE, .7 LG, .43 OD, NYLON) (14.630)	97	Y	2	20540336
59.	7-N8	10.694	RETAINER, FRT S/D W/STR (PAINT TO MATCH) (FITS .18 HOLE, .7 LG, .43 OD, NYLON) (14.630)	97	Y	2	20540336

RPO DEFINITIONS

AAB – MEMORY DRIVER CONVENIENCE PACKAGE
CC3 – ROOF,SUN,REMOVEABLE PANELS(TRANSPARENT PLASTIC)
CF7 – ROOF,SUN,REMOVABLE,NON-TRANSPARENT
C2L – ROOF PACKAGE,DUAL REMOVEABLE
UZ6 – SPEAKER SYSTEM 6, QUAD FRT DR MTD, DUAL QTR MTD
19I – INTERIOR TRIM,BLACK
92I – INTERIOR TRIM SHALE/PEWTER
94I – INTERIOR TRIM FIRETHORN RED (97)

cardiagn.com

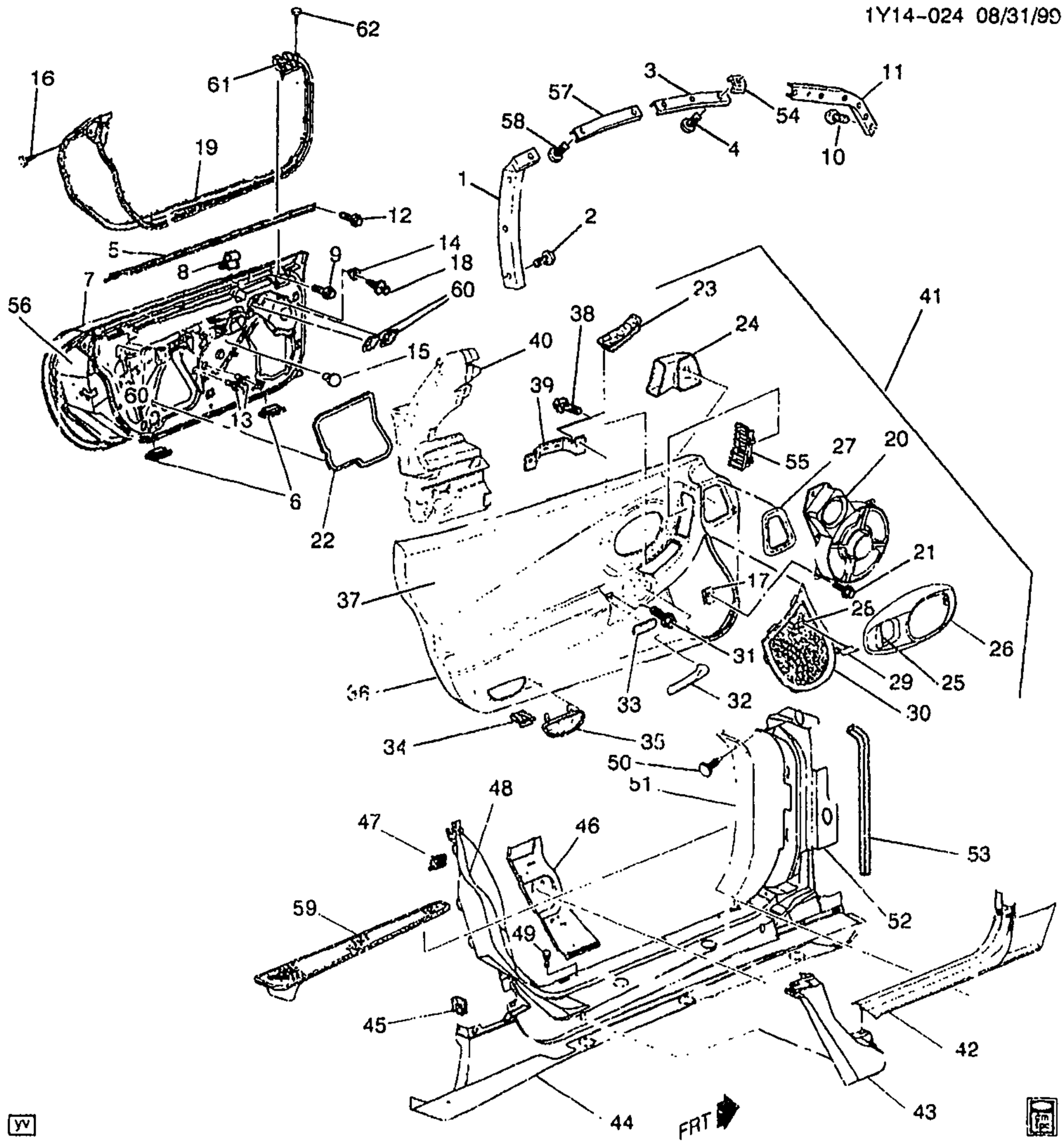

1Y14-024

1998-2002 Y67 TRIM/FRONT DOOR & SEALING

1.	7-N9	10.710	RETAINER, FRT S/D WDO RR W/STR	98-99	Y67	RH	10252858
	7-N9	10.710	RETAINER FRT S/D WDO RR W/STR	98-99	Y67	LH	10445410

cardiagn.com

							1Y14-024
	7-N9	10.710	RETAINER, FRT S/D WDO RR W/STR (USED ON VEHICLES WHERE FRONT END OF RETAINER IS SEALED TO REST OF RETAINER)	00	Y67 (1ST DES)	RH	10252858
	7-N9	10.710	RETAINER, FRT S/D WDO RR W/STR	00	Y67 (1ST DES)	LH	10445410
	7-N9	10.710	RETAINER, FRT S/D WDO RR W/STR	01-02	Y67	LH	10445410
	7-N9	10.710	RETAINER, FRT S/D WDO RR W/STR	01-02	Y67	RH	10445412
	7-N9	10.710	RETAINER, FRT S/D WDO RR W/STR (FLAT END ONE PIECE) (USED ON VEHICLES W/FRONT END OF RETAINER AS A SEPARATE PART THAT ATTACHES TO THE REST OF THE RETAINER W/BOLT/SCREWS)	00	Y67 (2ND DES)	LH	10445411
	7-N9	10.710	RETAINER, FRT S/D WDO RH W/STR (FLAT END ONE PIECE) (USED ON VEHICLES W/FRONT END OF RETAINER AS A SEPARATE PART THAT ATTACHES TO THE REST OF THE RETAINER W/BOLT/SCREWS)	00	Y67 (2ND DES)	RH	10445413
	7-N9	10.710	RETAINER, FRT S/D WDO RR W/STR (FLAT END ONE PIECE) ..	01-02	Y67	LH	10445411
	7-N9	10.710	RETAINER, FRT S/D WDO RR W/STR (FLAT END ONE PIECE) ..	01-02	Y67	RH	10445413
	7-N9	10.710	RETAINER, FRT S/D WDO RR W/STR (ONE PIECE CURVED) ...	00	Y67 (2ND DES)	LH	10445410
	7-N9	10.710	RETAINER, FRT S/D WDO RR W/STR (ONE PIECE CURVED) ...	00	Y67 (2ND DES)	RH	10445412
	7-N9	10.710	RETAINER, FRT S/D WDO RR W/STR (USE TOGETHER W/ P/N 10445410)	98-99	Y67	LH	10445411
	7-N9	10.710	RETAINER, FRT S/D WDO RR W/STR (USE TOGETHER W/ P/N 10445410)	00	Y67 (1ST DES)	LH	10445411
2.		8.977	SCREW, LG RND WA HD W/BLK NYL WA, 4.2X 1.41X13, 11-OD, DRILL PT, 6172, PEOR (FRT S/D WDO RR W/STR RET)	98-02	.....	8	10180421
3.	7-N9	10.710	RETAINER, FRT S/D WDO UPR FRT W/STR	98-00	Y67	RH	10252854
	7-N9	10.710	RETAINER, FRT S/D WDO UPR FRT W/STR	98-02	Y67	LH	10308189
	7-N9	10.710	RETAINER, FRT S/D WDO UPR FRT W/STR	01-02	Y67	RH	10308190
4.		8.977	SCREW, LG RND WA HD W/BLK NYL WA, 4.2X 1.41X13, 11-OD, DRILL PT, 6172, PEOR (FRT S/D WDO UPR FRT W/STR RET)	98-02	.....	6	10180421

cardiagn.com

		8.977	BOLT, RD CROWNED WA HD C/R M4.2X1.41X16POR (FRT S/D WDO UPR W/STR RET) (W/CC3, CF7)	98-02		8	11508231
5.	7-N9	10.710	SEALING STRIP, FRT S/D WDO OTR	98-00	Y67	LH	10409129
	7-N9	10.710	SEALING STRIP, FRT S/D WDO OTR	98-01	Y67	RH	10409130
	7-N9	10.710	SEALING STRIP, FRT S/D WDO OTR	98-00	Y67	RH	10447043
	7-N9	10.710	SEALING STRIP, FRT S/D WDO OTR	01-02	Y67	LH	10313423
	7-N9	10.710	SEALING STRIP, FRT S/D WDO OTR	01-02	Y67	RH	10313424
6.	7-N8	10.587	PLUG, FRT S/D INR PNL HOLE (POSN #1-6) (FITS 54.1MM HOLE) (RECTANGULAR)	98-02	Y67	4	10283990
7.	7-N24	12.895	PANEL, FRT S/D OTR	98-02	Y	LH	12529725
8.	7-A7	14.683	CLIP, FRT S/D TR RET	98-02	Y	6	884154
9.		8.908	SCR LGE WASHER HEAD HI-LO BHL (FRT S/D T/PNL) (8.977)	98-02		3	11509231
10.		8.977	BOLT, RD CROWNED WA HD C/R M4.2X1.41X16POR (FRT S/D WDO FRT W/STR RET)	98-02		10	11508231
11.	7-N9	10.710	RETAINER, FRT S/D WDO FRT W/STR	98-02	Y67	LH	10252847
	7-N9	10.710	RETAINER, FRT S/D WDO FRT W/STR	98-02	Y67	RH	10252848
12.		8.908	SCR LGE WASHER HEAD HI-LO BHL (FRT S/D WDO OTR S/STR) (8.977)	98-02		2	11509231
13.	7-A7	14.683	NUT, FRT S/D TR PNL	98-02	Y	4	10403545
14.	7-A7	14.683	GROMMET, FRT S/D TR RET	98-02	Y	12	10291930
15.	7-N8	10.587	PLUG, FRT S/D INR PNL HOLE (POSN #7, 8) (FITS 23.1MM HOLE) (ROUND)	98-02	Y67	4	10288134
16.	7-N8	10.694	RETAINER, FRT S/D W/STR (PART OF 19) (BLACK) (4.8 HOLE) (14.685)	98-02	Y67	6	20538173
17.		8.921	NUT, U TYPE, MULTI THD, PREV TORQ, M4.2X1.41TAP, 8.1REACH, 0.65-3.80 PNLS 1065 PZOR (RDO FRT SPKR) (AC-DELCO #11513599)	98-02		12	11513599
18.	7-A7	14.683	RETAINER, FRT S/D TR (MALE)	98-02	Y67	6	10291929
19.	7-N8	10.694	WEATHERSTRIP, FRT S/D (EPDM COMBINATION) (INCLS 16)	98-02	Y	LH	10302723
	7-N8	10.694	WEATHERSTRIP, FRT S/D (EPDM COMBINATION) (INCLS 16)	98-02	Y	RH	10302724
20.	7-N4	9.650	SPEAKER, RDO FRT (3"TWIDDLER, 7"WOOFER, 100W AMP) (AC-DELCO #10447355)	98-02	Y (UZ6)	2	10447355
21.		8.977	SCREW, HEX W/FL WA M4.2X2.25X20 TAP POR (RDO FRT SPKR)	98-02		12	11508443

cardiagn.com

							1174-024
22.	7-N7	10.355	DEFLECTOR, FRT S/D WAT	98-02	Y	LH	10263411
	7-N7	10.355	DEFLECTOR, FRT S/D WAT	98-02	Y	RH	10263412
23.	7-N11	10.777	SWITCH, SI WDO	98-02	Y	RH	12135165
	7-N11	10.777	SWITCH, SI WDO (DRIVER (W/POWER MIRRORS W/MEMORY W/DOOR LOCKS)) ..	01-02	Y (AAB)	LH	12135166
	7-N11	10.777	SWITCH, SI WDO (DRIVER) (W/POWER MIRRORS W/MEMORY W/DOOR LOCKS)) (& MIRRORS & DR LK)	99-02	Y (EXC AAB)	LH	12135167
	7-N11	10.777	SWITCH, SI WDO (SNAP FIT ASM) (DRIVER) (W/POWER MIRRORS W/MEMORY W/DOOR LOCKS))	98-00	Y07-67 (AAB)	LH	12135166
	7-N11	10.777	SWITCH, SI WDO (SNAP FIT ASM) (DRIVER) (W/POWER MIRRORS W/MEMORY W/DOOR LOCKS)) (& MIRRORS & DR LK) .	98	Y07-67 (EXC AAB)	LH	12135167
24.	7-N3	9.262	DUCT, FRT S/D AIR	98	Y07-67 (UZ6)	LH	10267874
	7-N3	9.262	DUCT, FRT S/D AIR	99-02	Y (UZ6)	LH	10267874
25.	7-N8	10.512	HANDLE, FRT S/D I/S	98-02	Y	LH	10406533
	7-N8	10.512	HANDLE, FRT S/D I/S	98-02	Y	RH	10406534
26.	7-N8	10.515	BEZEL, FRT S/D I/S HDL	98-02	Y	LH	10406531
	7-N8	10.515	BEZEL, FRT S/D I/S HDL	98-02	Y	RH	10406532
27.	7-N3	9.262	SEAL, FRT S/D AIR DUCT	98	Y07-67 (UZ6)	LH	10267885
	7-N3	9.262	SEAL, FRT S/D AIR DUCT	99-02	Y (UZ6)	LH	10267885
28.	7-N5	9.665	SCREEN, RDO FRT S/D SPKR ...	98-02	Y	LH	10291755
	7-N5	9.665	SCREEN, RDO FRT S/D SPKR ...	98-02	Y	RH	10291756
29.	7-N5	9.665	EMBLEM, RDO FRT S/D SPKR GRL	98-02	Y (UZ6)	2	10291759
30.	7-N5	9.665	GRILLE, RDO FRT S/D SPKR (PART OF 41) (BLACK)	98-00	Y (UZ6, 19I)	RH	10274045
	7-N5	9.665	GRILLE, RDO FRT S/D SPKR (PART OF 41) (BLACK)	98-00	Y (UZ6, 19I)	LH	10274046
	7-N5	9.665	GRILLE, RDO FRT S/D SPKR (PART OF 41) (PEWTER)	98	Y (UZ6, 92I)	RH	10274047
	7-N5	9.665	GRILLE, RDO FRT S/D SPKR (PART OF 41) (PEWTER)	98	Y (UZ6, 92I)	LH	10274048
	7-N5	9.665	GRILLE, RDO FRT S/D SPKR (PART OF 41) (RED)	98	Y (94I)	RH	10274049
	7-N5	9.665	GRILLE, RDO FRT S/D SPKR (PART OF 41) (RED)	98	Y (94I)	LH	10274050
	7-N5	9.665	GRILLE, RDO FRT S/D SPKR (PART OF 41) (CAMEL)	98-00	Y07-67 (UZ6, 67I)	LH	10285250
	7-N5	9.665	GRILLE, RDO FRT S/D SPKR (PART OF 41) (CAMEL)	98-00	Y07-67 (UZ6, 67I)	RH	10285251
	7-N5	9.665	GRILLE, RDO FRT S/D SPKR (PART OF 41) (PEWTER)	99-00	Y07-67 (UZ6, 92I)	RH	10274047
	7-N5	9.665	GRILLE, RDO FRT S/D SPKR (PART OF 41) (PEWTER)	99-00	Y07-67 (UZ6, 92I)	LH	10274048
	7-N5	9.665	GRILLE, RDO FRT S/D SPKR (PART OF 41) (RED)	99	Y07-67 (UZ6, 94I)	RH	10274049
	7-N5	9.665	GRILLE, RDO FRT S/D SPKR (PART OF 41) (RED)	99	Y07-67 (UZ6, 94I)	LH	10274050
	7-N5	9.665	GRILLE, RDO FRT S/D SPKR (PART OF 41) (RED)	00	Y07-67 (UZ6, 70I)	LH	10409257
	7-N5	9.665	GRILLE, RDO FRT S/D SPKR (PART OF 41) (RED)	00	Y07-67 (UZ6, 70I)	RH	10409258

cardiagn.com

							TY14-024
	7-N5	9.665	GRILLE, RDO FRT S/D SPKR (PART OF 41) (BLACK)	01-02	Y (19I)	RH	10274045
	7-N5	9.665	GRILLE, RDO FRT S/D SPKR (PART OF 41) (BLACK)	01-02	Y (19I)	LH	10274046
	7-N5	9.665	GRILLE, RDO FRT S/D SPKR (PART OF 41) (PEWTER)	01-02	Y07-67 (92I)	RH	10274047
	7-N5	9.665	GRILLE, RDO FRT S/D SPKR (PART OF 41) (PEWTER)	01-02	Y07-67 (92I)	LH	10274048
	7-N5	9.665	GRILLE, RDO FRT S/D SPKR (PART OF 41) (CAMEL)	01-02	Y07-67 (67I)	LH	10285250
	7-N5	9.665	GRILLE, RDO FRT S/D SPKR (PART OF 41) (CAMEL)	01-02	Y07-67 (67I)	RH	10285251
	7-N5	9.665	GRILLE, RDO FRT S/D SPKR (PART OF 41) (RED)	01-02	Y (70I)	LH	10409257
	7-N5	9.665	GRILLE, RDO FRT S/D SPKR (PART OF 41) (RED)	01-02	Y (70I)	RH	10409258
31.	7-A7	14.683	BOLT, FRT S/D T/PNL (12.810) ..	98-02	Y	4	10293378
32.	7-A9	14.691	HANDLE, FRT S/D PULL	98-02	Y	RH	22640132
	7-A9	14.691	HANDLE, FRT S/D PULL	98-02	Y	LH	22640133
33.	7-A9	14.691	PLUG, FRT S/D PULL HDL FIN ..	98-02	Y	2	10279471
34.	7-A8	14.688	RETAINER, FRT S/D WRNG REFL (PART OF 35) (GREEN) (10.240) (AC-DELCO #10038190)	98-02	Y	2	10038190
35.	7-A9	14.691	REFLECTOR, FRT S/D WRNG (CPS) (INCLS 34)	98-02	Y	2	10295148
36.		N.S.	PANEL, FRT S/D LWR TR		.....		
37.		N.S.	PANEL, FRT S/D UPR TR		.....		
38.		8.900	BOLT, M6X1X12, 9THD, 10 OD, 8.8, PO, MACH, HDR-PT, TORX DR (FRT S/D PULL HDL) (14.691)	98-02	.....	2	10292678
39.	7-A9	14.691	BRACKET, FRT S/D PULL HDL ..	98-02	Y	LH	10267883
	7-A9	14.691	BRACKET, FRT S/D PULL HDL ..	98-02	Y	RH	10281622
40.	7-N7	10.355	ABSORBER, FRT S/D INR PNL UPR ENGY	98-02	Y	LH	10427263
	7-N7	10.355	ABSORBER, FRT S/D INR PNL UPR ENGY	98-02	Y	RH	10427275
41.	7-A8	14.685	TRIM, FRT S/D (CPS) (INCLS 30) (BLACK) (INCLUDES FRT S/D INNER SEALING STRIP)	98-99	Y (UZ6, 19I)	LH	10420164
	7-A8	14.685	TRIM, FRT S/D (CPS) (INCLS 30, (RED) (INCLUDES FRT S/D INNER SEALING STRIP)	98-99	Y07-67 (UZ6, 94I)	LH	10420170
	7-A8	14.685	TRIM, FRT S/D (CPS) (INCLS 30) (RED) (INCLUDES FRT S/D INNER SEALING STRIP)	98-99	Y07-67 (UZ6, 94I)	RH	10420171
	7-A8	14.685	TRIM, FRT S/D (CPS) (INCLS 30) (PEWTER) (INCLS INNER SEALING STRIP)	98-00	Y07-67 (UZ6, 92I)	RH	10441491
	7-A8	14.685	TRIM, FRT S/D (CPS) (INCLS 30) (PEWTER) (INCLS INNER SEALING STRIP)	98-00	Y07-67 (UZ6, 92I)	LH	10441492
	7-A8	14.685	TRIM, FRT S/D (CPS) (INCLS 30) (OAK) (INCLS INNER SEALING STRIP)	98-00	Y07-67 (UZ6, 67I)	LH	10441494
	7-A8	14.685	TRIM, FRT S/D (CPS) (INCLS 30) (BLACK) (INCLS INNER SEALING STRIP)	98-02	Y (UZ6, 19I)	RH	10441489

cardiagn.com

	7-A8	14.685	TRIM, FRT S/D (CPS) (INCLS 30) (BLACK) (INCLS INNER SEALING STRIP)	00-02	Y (UZ6, 19I)	LH	10441490
	7-A8	14.685	TRIM, FRT S/D (CPS) (INCLS 30) (OAK) (INCLS INNER SEALING STRIP)	98-00	Y07-67 (UZ6, 67I)	RH	10441493
	7-A8	14.685	TRIM, FRT S/D (CPS) (INCLS 30) (RED) (INCLS INNER SEALING STRIP)	00	Y07-67 (UZ6, 70I)	RH	10441495
	7-A8	14.685	TRIM, FRT S/D (CPS) (INCLS 30) (RED) (INCLS INNER SEALING STRIP)	00	Y07-67 (UZ6, 70I)	LH	10441496
	7-A8	14.685	TRIM, FRT S/D (CPS) (INCLS 30) (PEWTER) (INCLS INNER SEALING STRIP)	01-02	Y07-67 (92I)	RH	10441491
	7-A8	14.685	TRIM, FRT S/D (CPS) (INCLS 30) (PEWTER) (INCLS INNER SEALING STRIP)	01-02	Y07-67 (92I)	LH	10441492
	7-A8	14.685	TRIM, FRT S/D (CPS) (INCLS 30) (OAK) (INCLS INNER SEALING STRIP)	01-02	Y07-67 (67I)	RH	10441493
	7-A8	14.685	TRIM, FRT S/D (CPS) (INCLS 30) (OAK) (INCLS INNER SEALING STRIP)	01-02	Y07-67 (67I)	LH	10441494
	7-A8	14.685	TRIM, FRT S/D (CPS) (INCLS 30) (RED) (INCLS INNER SEALING STRIP)	01-02	Y (70I)	RH	10441495
	7-A8	14.685	TRIM, FRT S/D (CPS) (INCLS 30) (RED) (INCLS INNER SEALING STRIP)	01-02	Y (70I)	LH	10441496
42.	7-N11	11.175	PLATE, FRT S/D SILL TR (BLACK)	98-02	Y (19I)	LH	10430855
	7-N11	11.175	PLATE, FRT S/D SILL TR (BLACK)	98-02	Y (19I)	RH	10430856
	7-N11	11.175	PLATE, FRT S/D SILL TR (RED)	98-99	Y07-67 (94I)	LH	10272389
	7-N11	11.175	PLATE, FRT S/D SILL TR (RED)	98-99	Y07-67 (94I)	RH	10272390
	7-N11	11.175	PLATE, FRT S/D SILL TR (PEWTER)	98-02	Y07-67 (92I)	LH	10430857
	7-N11	11.175	PLATE, FRT S/D SILL TR (PEWTER)	98-02	Y07-67 (92I)	RH	10430858
	7-N11	11.175	PLATE, FRT S/D SILL TR (OAK)	98-02	Y07-67 (67I)	LH	10430861
	7-N11	11.175	PLATE, FRT S/D SILL TR (OAK)	98-02	Y07-67 (67I)	RH	10430862
	7-N11	11.175	PLATE, FRT S/D SILL TR (RED)	00-02	Y07-67 (70I)	LH	10430863
	7-N11	11.175	PLATE, FRT S/D SILL TR (RED)	00-02	Y07-67 (70I)	RH	10430864
43.	7-A9	14.731	PANEL, BODY L/PLR TR (BLACK)	98-00	Y (19I)	LH	10258547
	7-A9	14.731	PANEL, BODY L/PLR TR (RED)	98-99	Y (94I)	LH	10272395
	7-A9	14.731	PANEL, BODY L/PLR TR (BLACK)	98-00	Y (19I)	RH	10426020
	7-A9	14.731	PANEL, BODY L/PLR TR (RED)	98-99	Y (94I)	RH	10426024
	7-A9	14.731	PANEL, BODY L/PLR TR (PEWTER)	98-02	Y07-67 (92I)	RH	10272394
	7-A9	14.731	PANEL, BODY L/PLR TR (CAMEL)	98-02	Y07-67 (67I)	LH	10285246
	7-A9	14.731	PANEL, BODY L/PLR TR (PEWTER)	98-02	Y07-67 (92I)	LH	10426021
	7-A9	14.731	PANEL, BODY L/PLR TR (CAMEL)	98-02	Y07-67 (67I)	RH	10426026
	7-A9	14.731	PANEL, BODY L/PLR TR (RED)	00	Y (70I)	LH	10426027

cardiagn.com

							11114-024
	7-A9	14.731	PANEL, BODY L/PLR TR (RED) ..	00	Y (70I)	RH	10426028
	7-A9	14.731	PANEL, BODY L/PLR TR (BLACK)	01-02	YY07-67 (19I)	LH	10258547
	7-A9	14.731	PANEL, BODY L/PLR TR (BLACK)	01-02	YY07-67 (19I)	RH	10426020
	7-A9	14.731	PANEL, BODY L/PLR TR (RED) ..	01-02	YY07-67 (70I)	LH	10426027
	7-A9	14.731	PANEL, BODY L/PLR TR (RED) ..	01-02	YY07-67 (70I)	RH	10426028
44.		N.S.	PANEL, FRT S/D OPG FIN (INCLS 48, 52)		.....		
45.		8.921	NUT, U TYPE, MULTI THD, PREV TORQ, M4.2X1.41TAP, 8.1REACH, 0.65-3.80 PNLS 1065 PZOR (FRT S/D OPG FIN PNL) (POSN #2) (AC-DELCO #11513599) ...	98-02	.....	2	11513599
46.	7-N24	12.944	PANEL, BODY L/PLR INR	98-02	Y67	RH	12458930
	7-N24	12.944	PANEL, BODY L/PLR INR	98-02	Y67	LH	12458931
47.	7-A7	14.665	NUT, FRT S/D OPG FIN PNL (RING TO QTR PNL JOINT) (POSN #1) (12.942)	98	Y	6	10277883
	7-A7	14.665	NUT, FRT S/D OPG FIN PNL (RING TO QTR PNL JOINT) (PAINT TO MATCH) (8.919)	99-02	Y	6	1629843
48.	7-A7	14.665	PANEL, FRT S/D OPG FIN (LWR) (PART OF 44)	98-02	Y	LH	10444701
	7-A7	14.665	PANEL, FRT S/D OPG FIN (LWR) (PART OF 44)	98-02	Y	RH	10444702
49.		8.977	SCREW, LG RD HD TORX TAP M4.2X1.41X20 SS BL OX (FRT S/D OPG FIN PNL)	98-02	.....	4	16751144
50.	7-N6	10.056	RETAINER, W/S SI G/MLDG (PAINT TO MATCH) (FITS .18 HOLE, .7 LG, .43 OD. NYLON) (14.630)	98-02	Y	2	20540336
51.	7-C6	15.100	MOLDING, BODY SI FRT GARN (BLACK)	98-02	Y	LH	10274637
	7-C6	15.100	MOLDING, BODY SI FRT GARN (BLACK)	98-02	Y	RH	10274638
52.	7-A7	14.665	PANEL, FRT S/D OPG FIN (UPR) (PART OF 44) (12.942)	98-02	Y	LH	10418921
	7-A7	14.665	PANEL, FRT S/D OPG FIN (UPR) (PART OF 44) (12.942)	98-02	Y	RH	10418922
53.		N.S.	SEALING STRIP, FRT S/D OPG FIN PNL (POSN #1)		.....		
54.	7-N8	10.703	CLIP, FRT S/D WDO W/STR RET (RF PNL RET ALUM)	98-02	Y67	2	10408012
55.	7-N3	9.262	OUTLET, FRT S/D FRT AIR	98-99	Y (UZ6)	LH	10406518
	7-N3	9.262	OUTLET, FRT S/D FRT AIR	00-02	Y	LH	10406518
56.	7-N7	10.351	DOOR, FRT SI (CPS)	98-02	Y	LH	10414235
	7-N7	10.351	DOOR, FRT SI (CPS)	98-99	Y	RH	10414236
	7-N7	10.351	DOOR, FRT SI (CPS)	00-02	Y	RH	10433526
57.	7-N8	10.695	RETAINER, FRT S/D WDO UPR RR W/STR (14.120)	98-02	Y67	LH	10252855
	7-N8	10.695	RETAINER, FRT S/D WDO UPR RR W/STR (14.120)	98-02	Y67	RH	10252856
58.		8.977	SCREW, LG RND WA HD W/BLK NYL WA, 4.2X 1.41X13, 11 -OD, DRILL PT, 6172, PEOR (FRT S/D WDO UPR RR W/STR RET)	98-02	.....	4	10180421

cardiagn.com

59.	7–N11	11.175	PLATE, FRT S/D SILL TR (LOW GLOSS BLACK) (CORVETTE CROSSED FLAG LOGO)	98–02	Y67	LH	10420975
	7–N11	11.175	PLATE, FRT S/D SILL TR (LOW GLOSS BLACK) (CORVETTE CROSSED FLAG LOGO)	98–02	Y67	RH	10420976
60.	7–N24	12.895	SEAL, FRT S/D INR PNL HOLE (4 1/4"X7 1/2") (TRIM AS REQ'D) (15.492)	98–02	Y	AR	11516174
61.	7–N8	10.694	RETAINER, FRT S/D W/STR (PART OF 19) (PAINT TO MATCH) (FITS .18 HOLE, .7 LG, .43 OD, NYLON) (14.630)	98–02	Y67	2	20540336
62.	7–N8	10.694	RETAINER, FRT S/D W/STR (PAINT TO MATCH) (FITS .18 HOLE, .7 LG, .43 OD, NYLON) (14.630)	98–02	Y67	2	20540336

RPO DEFINITIONS
AAB – MEMORY DRIVER CONVENIENCE PACKAGE
UZ6 – SPEAKER SYSTEM 6, QUAD FRT DR MTD, DUAL QTR MTD
19I – INTERIOR TRIM,BLACK
67I – INTERIOR TRIM,CAMEL
70I – INTERIOR TRIM,TORCH RED
92I – INTERIOR TRIM SHALE/PEWTER
94I – INTERIOR TRIM FIRETHORN RED (97)

cardiagn.com

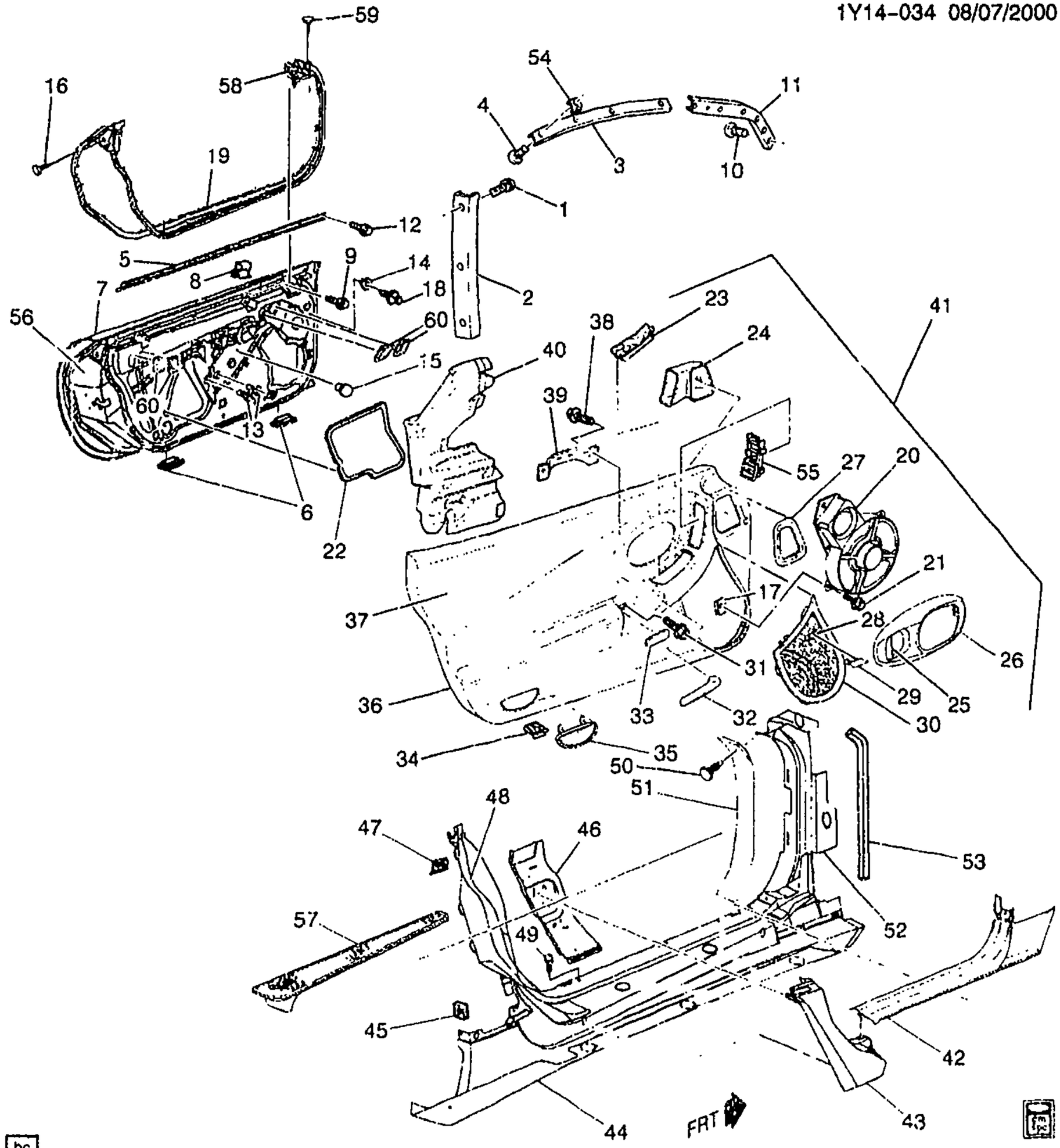

bc

1Y14-034

1998-2002 Y07 TRIM/FRONT DOOR & SEALING

1.		8.977	BOLT, RD CROWNED WA HD C/R M4.2X1.41X16POR (RET) ...	98-02	.....	6	11508231
2.	7-N9	10.710	RETAINER, FRT S/D WDO RR W/STR	98-02	Y07	RH	10299394
	7-N9	10.710	RETAINER, FRT S/D WDO RR W/STR	98-02	Y07	LH	10299393

cardiagn.com

3.	7-N9	10.710	RETAINER, FRT S/D WDO UPR W/STR (RF PNL RET ALUM)	98-02	Y07 (CC3, CF7)	LH	10252849
	7-N9	10.710	RETAINER, FRT S/D WDO UPR W/STR (RF PNL RET ALUM)	98-02	Y07 (C2L)	LH	10252849
	7-N9	10.710	RETAINER, FRT S/D WDO UPR W/STR (RF PNL RET ALUM) (NON ENCAPSULATED)	98-02	Y07 (CC3, CF7)	RH	10252850
	7-N9	10.710	RETAINER, FRT S/D WDO UPR W/STR (RF PNL RET ALUM) (NON ENCAPSULATED)	98-02	Y07 (C2L)	RH	10252850
4.		8.977	BOLT, RD CROWNED WA HD C/R M4.2X1.41X16POR (FRT S/D WDO UPR W/STR RET) (W/C2L) .	98-02	.....	16	11508231
		8.977	BOLT, RD CROWNED WA HD C/R M4.2X1.41X16POR (FRT S/D WDO UPR W/STR RET) (W/CC3/CF7)	98-02	.....	8	11508231
5.	7-N9	10.710	SEALING STRIP, FRT S/D WDO OTR	98-00	Y07	LH	10447039
	7-N9	10.710	SEALING STRIP, FRT S/D WDO OTR	98-00	Y07	RH	10447040
	7-N9	10.710	SEALING STRIP, FRT S/D WDO OTR	01-02	Y07	RH	10313420
	7-N9	10.710	SEALING STRIP, FRT S/D WDO OTR	01-02	Y07	LH	10313421
6.	7-N8	10.587	PLUG, FRT S/D INR PNL HOLE (POSN #1-6) (FITS 54.1MM HOLE) (RECTANGULAR)	98-02	Y	4	10283990
7.	7-N24	12.895	PANEL, FRT S/D OTR	98-02	Y	LH	12529725
8.	7-A7	14.683	CLIP, FRT S/D TR RET	98-02	Y	6	884154
9.		8.908	SCR LGE WASHER HEAD HI-LO BHL (FRT S/D T/PNL) (8.977)	98-02	.....	3	11509231
10.		8.977	BOLT, RD CROWNED WA HD C/R M4.2X1.41X16POR (FRT S/D WDO FRT W/STR RET)	98-02	.....	10	11508231
11.	7-N9	10.710	RETAINER, FRT S/D WDO FRT W/STR	98-02	Y07	LH	10252847
	7-N9	10.710	RETAINER, FRT S/D WDO FRT W/STR	98-02	Y07	RH	10252848
12.		8.908	SCR LGE WASHER HEAD HI-LO BHL (FRT S/D WDO OTR S/STR) (8.977)	98-02	.....	2	11509231
13.	7-A7	14.683	NUT, FRT S/D TR PNL	98-02	Y	4	10403545
14.	7-A7	14.683	GROMMET, FRT S/D TR RET	98-02	Y	12	10291930
15.	7-N8	10.587	PLUG, FRT S/D INR PNL HOLE (POSN #7, 8) (FITS 23.1MM HOLE) (ROUND)	98-02	Y	4	10288134
16.	7-N8	10.694	RETAINER, FRT S/D W/STR (PAINT TO MATCH) (FITS .18 HOLE, .7 LG, 43 OD, NYLON) (14.630)	98	Y	6	20540336
	7-N8	10.694	RETAINER, FRT S/D W/STR (BLACK) (4.8 HOLE) (14.685)	99-02	Y	6	20538173

cardiagn.com

17.		8.921	NUT, U TYPE, MULTI THD, PREV TORQ, M4.2X1.41TAP, 8.1REACH, 0.65–3.80 PNLS 1065 PZOR (RDO FRT SPKR) (AC–DELCO #11513599)	98–02		12	11513599
18.	7–A7	14.683	RETAINER, FRT S/D TR (MALE)	98–02	Y	6	10291929
19.	7–N8	10.694	WEATHERSTRIP, FRT S/D (EPDM COMBINATION) (INCLS 58)	98–02	Y	LH	10302723
	7–N8	10.694	WEATHERSTRIP, FRT S/D (EPDM COMBINATION) (INCLS 58)	98–02	Y	RH	10302724
20.	7–N4	9.650	SPEAKER, RDO FRT (3"TWIDDLER, 7"WOOFER, 100W AMP) (AC–DELCO #10447355)	98–02	Y (UZ6)	2	10447355
21.		8.977	SCREW, HEX W/FL WA M4.2X2.25X20 TAP POR (RDO FRT SPKR)	98–02		12	11508443
22.	7–N7	10.355	DEFLECTOR, FRT S/D WAT	98–02	Y	LH	10263411
	7–N7	10.355	DEFLECTOR, FRT S/D WAT	98–02	Y	RH	10263412
23.	7–N11	10.777	SWITCH, SI WDO	98–02	Y	RH	12135165
	7–N11	10.777	SWITCH, SI WDO (DRIVER (W/POWER MIRRORS W/MEMORY W/DOOR LOCKS))	01–02	Y (AAB)	LH	12135166
	7–N11	10.777	SWITCH, SI WDO (DRIVER) (W/POWER MIRRORS W/MEMORY W/DOOR LOCKS)) (& MIRRORS & DR LK)	99–02	Y (EXC AAB)	LH	12135167
	7–N11	10.777	SWITCH, SI WDO (SNAP FIT ASM) (DRIVER) (W/POWER MIRRORS W/MEMORY W/DOOR LOCKS))	98–00	Y07–67 (AAB)	LH	12135166
	7–N11	10.777	SWITCH, SI WDO (SNAP FIT ASM) (DRIVER) (W/POWER MIRRORS W/MEMORY W/DOOR LOCKS)) (& MIRRORS & DR LK)	98	Y07–67 (EXC AAB)	LH	12135167
24.	7–N3	9.262	DUCT, FRT S/D AIR	98	Y07–67 (UZ6)	LH	10267874
	7–N3	9.262	DUCT, FRT S/D AIR	99–02	Y (UZ6)	LH	10267874
25.	7–N8	10.512	HANDLE, FRT S/D I/S	98–02	Y	LH	10406533
	7–N8	10.512	HANDLE, FRT S/D I/S	98–02	Y	RH	10406534
26.	7–N8	10.515	BEZEL, FRT S/D I/S HDL	98–02	Y	LH	10406531
	7–N8	10.515	BEZEL, FRT S/D I/S HDL	98–02	Y	RH	10406532
27.	7–N3	9.262	SEAL, FRT S/D AIR DUCT	98	Y07–67 (UZ6)	LH	10267885
	7–N3	9.262	SEAL, FRT S/D AIR DUCT	99–02	Y (UZ6)	LH	10267885
28.	7–N5	9.665	SCREEN, RDO FRT S/D SPKR	98–02	Y	LH	10291755
	7–N5	9.665	SCREEN, RDO FRT S/D SPKR	98–02	Y	RH	10291756
29.	7–N5	9.665	EMBLEM, RDO FRT S/D SPKR GRL	98–02	Y (UZ6)	2	10291759
30.	7–N5	9.665	GRILLE, RDO FRT S/D SPKR (PART OF 41) (BLACK)	98–00	Y (UZ6, 19I)	RH	10274045
	7–N5	9.665	GRILLE, RDO FRT S/D SPKR (PART OF 41) (BLACK)	98–00	Y (UZ6, 19I)	LH	10274046
	7–N5	9.665	GRILLE, RDO FRT S/D SPKR (PART OF 41) (PEWTER)	98	Y (UZ6, 92I)	RH	10274047
	7–N5	9.665	GRILLE, RDO FRT S/D SPKR (PART OF 41) (PEWTER)	98	Y (UZ6, 92I)	LH	10274048

cardiagn.com

	7-N5	9.665	GRILLE, RDO FRT S/D SPKR (PART OF 41) (RED)	98	Y (94I)	RH	10274049
	7-N5	9.665	GRILLE, RDO FRT S/D SPKR (PART OF 41) (RED)	98	Y (94I)	LH	10274050
	7-N5	9.665	GRILLE, RDO FRT S/D SPKR (PART OF 41) (CAMEL)	98-00	Y07-67 (UZ6, 67I)	LH	10285250
	7-N5	9.665	GRILLE, RDO FRT S/D SPKR (PART OF 41) (CAMEL)	98-00	Y07-67 (UZ6, 67I)	RH	10285251
	7-N5	9.665	GRILLE, RDO FRT S/D SPKR (PART OF 41) (PEWTER)	99-00	Y07-67 (UZ6, 92I)	RH	10274047
	7-N5	9.665	GRILLE, RDO FRT S/D SPKR (PART OF 41) (PEWTER)	99-00	Y07-67 (UZ6, 92I)	LH	10274048
	7-N5	9.665	GRILLE, RDO FRT S/D SPKR (PART OF 41) (RED)	99	Y07-67 (UZ6, 94I)	RH	10274049
	7-N5	9.665	GRILLE, RDO FRT S/D SPKR (PART OF 41) (RED)	99	Y07-67 (UZ6, 94I)	LH	10274050
	7-N5	9.665	GRILLE, RDO FRT S/D SPKR (PART OF 41) (RED)	00	Y07-67 (UZ6, 70I)	LH	10409257
	7-N5	9.665	GRILLE, RDO FRT S/D SPKR (PART OF 41) (RED)	00	Y07-67 (UZ6, 70I)	RH	10409258
	7-N5	9.665	GRILLE, RDO FRT S/D SPKR (PART OF 41) (BLACK)	01-02	Y (19I)	RH	10274045
	7-N5	9.665	GRILLE, RDO FRT S/D SPKR (PART OF 41) (BLACK)	01-02	Y (19I)	LH	10274046
	7-N5	9.665	GRILLE, RDO FRT S/D SPKR (PART OF 41) (PEWTER)	01-02	Y07-67 (92I)	RH	10274047
	7-N5	9.665	GRILLE, RDO FRT S/D SPKR (PART OF 41) (PEWTER)	01-02	Y07-67 (92I)	LH	10274048
	7-N5	9.665	GRILLE, RDO FRT S/D SPKR (PART OF 41) (CAMEL)	01-02	Y07-67 (67I)	LH	10285250
	7-N5	9.665	GRILLE, RDO FRT S/D SPKR (PART OF 41) (CAMEL)	01-02	Y07-67 (67I)	RH	10285251
	7-N5	9.665	GRILLE, RDO FRT S/D SPKR (PART OF 41) (RED)	01-02	Y (70I)	LH	10409257
	7-N5	9.665	GRILLE, RDO FRT S/D SPKR (PART OF 41) (RED)	01-02	Y (70I)	RH	10409258
31.	7-A7	14.683	BOLT, FRT S/D T/PNL (12.810)	98-02	Y	4	10293378
32.	7-A9	14.691	HANDLE, FRT S/D PULL	98-02	Y	RH	22640132
	7-A9	14.691	HANDLE, FRT S/D PULL	98-02	Y	LH	22640133
33.	7-A9	14.691	PLUG, FRT S/D PULL HDL FIN	98-02	Y	2	10279471
34.	7-A8	14.688	RETAINER, FRT S/D WRNG REFL (PART OF 35) (GREEN) (10.240) (AC-DELCO #10038190)	98-02	Y	2	10038190
35.	7-A9	14.691	REFLECTOR, FRT S/D WRNG (CPS) (INCLS 34)	98-02	Y	2	10295148
36.		N.S.	PANEL, FRT S/D LWR TR				
37.		N.S.	PANEL, FRT S/D UPR TR				
38.		8.900	BOLT, M6X1X12. 9THD, 10 OD, 8.8, PO, MACH, HDR-PT, TORX DR (FRT S/D PULL HDL) (14.691)	98-02		2	10282678
39.	7-A9	14.691	BRACKET, FRT S/D PULL HDL	98-02	Y	LH	10267883
	7-A9	14.691	BRACKET, FRT S/D PULL HDL	98-02	Y	RH	10281822
40.	7-N7	10.355	ABSORBER, FRT S/D INR PNL UPR ENGY	98-02	Y	LH	10427263
	7-N7	10.355	ABSORBER, FRT S/D INR PNL UPR ENGY	98-02	Y	RH	10427275

cardiagn.com

41.	7-A8	14.685	TRIM, FRT S/D (CPS) (INCLS 30) (BLACK) (INCLUDES FRT S/D INNER SEALING STRIP)	98-99	Y (UZ6, 19I)	LH	10420164
	7-A8	14.685	TRIM, FRT S/D (CPS) (INCLS 30) (RED) (INCLUDES FRT S/D INNER SEALING STRIP)	98-99	Y07-67 (UZ6, 94I)	LH	10420170
	7-A8	14.685	TRIM, FRT S/D (CPS) (INCLS 30) (RED) (INCLUDES FRT S/D INNER SEALING STRIP)	98-99	Y07-67 (UZ6, 94I)	RH	10420171
	7-A8	14.685	TRIM, FRT S/D (CPS) (INCLS 30) (PEWTER) (INCLS INNER SEALING STRIP)	98-00	Y07-67 (UZ6, 92I)	RH	10441491
	7-A8	14.685	TRIM, FRT S/D (CPS) (INCLS 30) (PEWTER) (INCLS INNER SEALING STRIP)	98-00	Y07-67 (UZ6, 92I)	LH	10441492
	7-A8	14.685	TRIM, FRT S/D (CPS) (INCLS 30) (OAK) (INCLS INNER SEALING STRIP)	98-00	Y07-67 (UZ6, 67I)	LH	10441494
	7-A8	14.685	TRIM, FRT S/D (CPS) (INCLS 30) (BLACK) (INCLS INNER SEALING STRIP)	98-02	Y (UZ6, 19I)	RH	10441489
	7-A8	14.685	TRIM, FRT S/D (CPS) (INCLS 30) (BLACK) (INCLS INNER SEALING STRIP)	00-02	Y (UZ6, 19I)	LH	10441490
	7-A8	14.685	TRIM, FRT S/D (CPS) (INCLS 30) (OAK) (INCLS INNER SEALING STRIP)	98-00	Y07-67 (UZ6, 67I)	RH	10441493
	7-A8	14.685	TRIM, FRT S/D (CPS) (INCLS 30) (RED) (INCLS INNER SEALING STRIP)	00	Y07-67 (UZ6, 70I) ...	RH	10441495
	7-A8	14.685	TRIM, FRT S/D (CPS) (INCLS 30) (RED) (INCLS INNER SEALING STRIP)	00	Y07-67 (UZ6, 70I)	LH	10441496
	7-A8	14.685	TRIM, FRT S/D (CPS) (INCLS 30) (PEWTER) (INCLS INNER SEALING STRIP)	01-02	Y07-67 (92I)	RH	10441491
	7-A8	14.685	TRIM, FRT S/D (CPS) (INCLS 30) (PEWTER) (INCLS INNER SEALING STRIP)	01-02	Y07-67 (92I)	LH	10441492
	7-A8	14.685	TRIM, FRT S/D (CPS) (INCLS 30) (OAK) (INCLS INNER SEALING STRIP)	01-02	Y07-67 (67I)	RH	10441493
	7-A8	14.685	TRIM, FRT S/D (CPS) (INCLS 30) (OAK) (INCLS INNER SEALING STRIP)	01-02	Y07-67 (67I)	LH	10441494
	7-A8	14.685	TRIM, FRT S/D (CPS) (INCLS 30) (RED) (INCLS INNER SEALING STRIP)	01-02	Y (70I)	RH	10441495
	7-A8	14.685	TRIM, FRT S/D (CPS) (INCLS 30) (RED) (INCLS INNER SEALING STRIP)	01-02	Y (70I)	LH	10441496
42.	7-N11	11.175	PLATE, FRT S/D SILL TR (BLACK)	98-02	Y (19I)	LH	10430855
	7-N11	11.175	PLATE, FRT S/D SILL TR (BLACK)	98-02	Y (19I)	RH	10430856
	7-N11	11.175	PLATE, FRT S/D SILL TR (RED) ..	98-99	Y07-67 (94I)	LH	10272389
	7-N11	11.175	PLATE, FRT S/D SILL TR (RED) ..	98-99	Y07-67 (94I)	RH	10272390

cardiagn.com

	7-N11	11.175	PLATE, FRT S/D SILL TR (PEWTER)	98-02	Y07-67 (92I)		LH	10430857
	7-N11	11.175	PLATE, FRT S/D SILL TR (PEWTER)	98-02	Y07-67 (92I)		RH	10430858
	7-N11	11.175	PLATE, FRT S/D SILL TR (OAK)	98-02	Y07-67 (67I)		LH	10430861
	7-N11	11.175	PLATE, FRT S/D SILL TR (OA	98-02	Y07-67 (67I)		RH	10430862
	7-N11	11.175	PLATE, FRT S/D SILL TR (RED)	00-02	Y07-67 (70'		LH	10430863
	7-N11	11.175	PLATE, FRT S/D SILL TR (RED)	00-02	Y07-67 (70I)		RH	10430864
43.	7-A9	14.731	PANEL, BODY L/PLR TR (BLACK)	98-00	Y (19I)		LH	10258547
	7-A9	14.731	PANEL, BODY L/PLR TR (RED)	98-99	Y (94I)		LH	10272395
	7-A9	14.731	PANEL, BODY L/PLR TR (BLACK)	98-00	Y (19I)		RH	10426020
	7-A9	14.731	PANEL, BODY L/PLR TR (RED)	98-99	Y (94I)		RH	10426024
	7-A9	14.731	PANEL, BODY L/PLR TR (PEWTER)	98-02	Y07-67 (92I)		RH	10272394
	7-A9	14.731	PANEL, BODY L/PLR TR (CAMEL)	98-02	Y07-67 (67I)		LH	10285246
	7-A9	14.731	PANEL, BODY L/PLR TR (PEWTER)	98-02	Y07-67 (92I)		LH	10426021
	7-A9	14.731	PANEL, BODY L/PLR TR (CAMEL)	98-02	Y07-67 (67I)		RH	10426026
	7-A9	14.731	PANEL, BODY L/PLR TR (RED)	00	Y (70I)		LH	10426027
	7-A9	14.731	PANEL, BODY L/PLR TR (RED)	00	Y (70I)		RH	10426028
	7-A9	14.731	PANEL, BODY L/PLR TR (BLACK)	01-02	YY07-67 (19I)		LH	10258547
	7-A9	14.731	PANEL, BODY L/PLR TR (BLACK)	01-02	YY07-67 (19I)		RH	10426020
	7-A9	14.731	PANEL, BODY L/PLR TR (RED)	01-02	YY07-67 (70I)		LH	10426027
	7-A9	14.731	PANEL, BODY L/PLR TR (RED)	01-02	YY07-67 (70I)		RH	10426028
44.		N.S.	PANEL, FRT S/D OPG FIN (INCLS 48, 52)					
45.		8.921	NUT, U TYPE, MULTI THD, PREV TORQ, M4.2X1.41TAP, 8.1REACH, 0.65-3.80 PNLS 1065 PZOR (FRT S/D OPG FIN PNL) (POSN #2) (AC-DELCO #11513599)	98-02			2	11513599
46.	7-N24	12.944	PANEL, BODY L/PLR INR (#55) (12.942)	98	Y07		RH	12458932
	7-N24	12.944	PANEL, BODY L/PLR INR (#55) (12.942)	98	Y07		LH	12458933
	7-N24	12.944	PANEL, BODY L/PLR INR (#55) (12.942)	99-02	Y07-37		RH	12458932
	7-N24	12.944	PANEL, BODY L/PLR INR (#55) (12.942)	99-02	Y07-37		LH	12458933
47.	7-A7	14.665	NUT, FRT S/D OPG FIN PNL (RING TO QTR PNL JOINT) (POSN #1) (12.942)	98	Y		6	10277883
	7-A7	14.665	NUT, FRT S/D OPG FIN PNL (RING TO QTR PNL JOINT) (PAINT TO MATCH) (8.919)	99-02	Y		6	1629843
48.	7-A7	14.665	PANEL, FRT S/D OPG FIN (LWR) (PART OF 44)	98-02	Y		LH	10444701
	7-A7	14.665	PANEL, FRT S/D OPG FIN (LWR) (PART OF 44)	98-01	Y		RH	10444702
49.		8.977	SCREW, LG RD HD TORX TAP M4.2X1.41X20 SS BL OX (FRT S/D OPG FIN PNL)	98-02			4	16751144

cardiagn.com

50.	7–N6	10.056	RETAINER, W/S SI G/MLDG (PAINT TO MATCH) (FITS .18 HOLE, .7 LG, .43 OD, NYLON) (14.630)	98–02	Y	2	20540336
51.	7–C6	15.100	MOLDING, BODY SI FRT GARN (BLACK)	98–02	Y	LH	10274637
	7–C6	15.100	MOLDING, BODY SI FRT GARN (BLACK)	98–02	Y	RH	10274638
52.	7–A7	14.665	PANEL, FRT S/D OPG FIN (UPR) (PART OF 44) (12.942)	98–02	Y	LH	10418921
	7–A7	14.665	PANEL, FRT S/D OPG FIN (UPR) (PART OF 44) (12.942)	98–01	Y	RH	10418922
53.		N.S.	SEALING STRIP, FRT S/D OPG FIN PNL				
54.	7–N8	10.703	CLIP, FRT S/D WDO W/STR RET	98–02	Y07 (CC3, CF7)	2	10408012
	7–N8	10.703	CLIP, FRT S/D WDO W/STR RET (RF PNL RET ALUM)	98–02	Y07 (C2L)	4	10408012
55.	7–N3	9.262	OUTLET, FRT S/D FRT AIR	98–99	Y (UZ6)	LH	10406518
	7–N3	9.262	OUTLET, FRT S/D FRT AIR	00–02	Y	LH	10406518
56.	7–N7	10.351	DOOR, FRT SI (CPS)	98–02	Y	LH	10414235
	7–N7	10.351	DOOR, FRT SI (CPS)	98–99	Y	RH	10414236
	7–N7	10.351	DOOR, FRT SI (CPS)	00–02	Y	RH	10433526
		8.917	NUT–METRIC ALL METAL DIR'L PRVG TORG TENS (FRT S/D OTR PNL BAR)	98–02		2	11516077
57.	7–N11	11.175	PLATE, FRT S/D SILL TR (LOW GLOSS BLACK) (CORVETTE CROSSED FLAG LOGO)	98–02	Y	LH	10420975
	7–N11	11.175	PLATE, FRT S/D SILL TR (LOW GLOSS BLACK) (CORVETTE CROSSED FLAG LOGO)	98–02	Y	RH	10420976
58.	7–N8	10.694	RETAINER, FRT S/D W/STR (PART OF 19) (PAINT TO MATCH) (FITS .18 HOLE, .7 LG, .43 OD, NYLON) (14.630)	98–02	Y	2	20540336
59.	7–N8	10.694	RETAINER, FRT S/D W/STR (PAINT TO MATCH) (FITS .18 HOLE, .7 LG, .43 OD, NYLON) (14.630)	98–02	Y	2	20540336
60.	7–N24	12.895	SEAL, FRT S/D INR PNL HOLE (4 1/4"X7 1/2") (TRIM AS REQ'D) (15.492)	98–02	Y	AR	11515174

RPO DEFINITIONS
AAB – MEMORY DRIVER CONVENIENCE PACKAGE
CC3 – ROOF,SUN,REMOVEABLE PANELS(TRANSPARENT PLASTIC)
CF7 – ROOF,SUN,REMOVABLE,NON–TRANSPARENT
C2L – ROOF PACKAGE,DUAL REMOVEABLE
UZ6 – SPEAKER SYSTEM 6, QUAD FRT DR MTD, DUAL QTR MTD
19I – INTERIOR TRIM,BLACK
67I – INTERIOR TRIM,CAMEL
70I – INTERIOR TRIM,TORCH RED
92I – INTERIOR TRIM SHALE/PEWTER
94I – INTERIOR TRIM FIRETHORN RED (97)

cardiagn.com

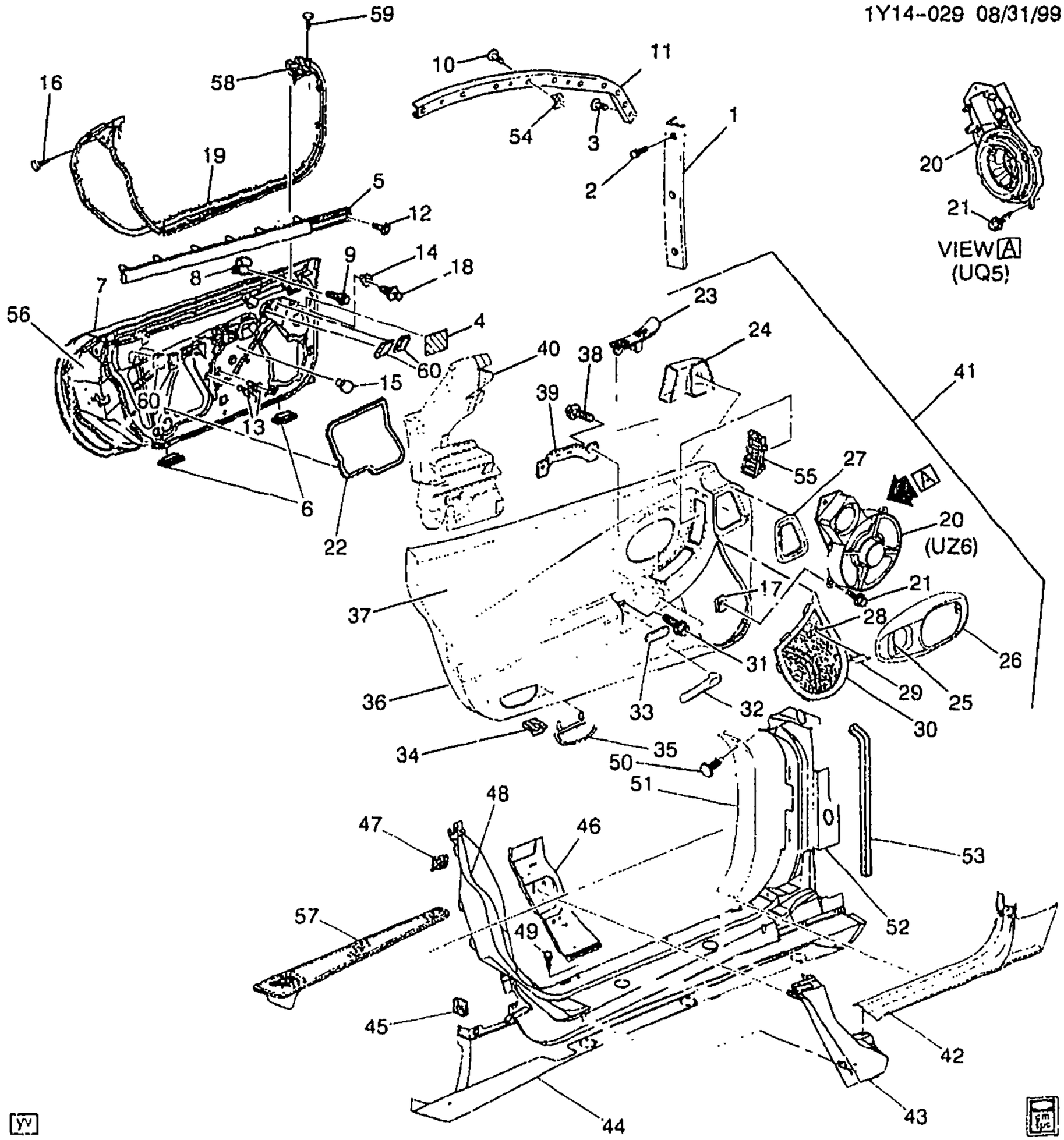

1999-2002 Y37 TRIM/FRONT DOOR & SEALING

1.	7-N8	10.694	RETAINER, FRT S/D W/STR UPR RR (METAL STRIP RETAINS RR UPR W/STR) (10.695)	99-02	Y37	RH	10419267
	7-N8	10.694	RETAINER, FRT S/D W/STR UPR RR (METAL STRIP RETAINS RR UPR W/STR) (10.695)	99-02	Y37	LH	10419268
2.		8.377	BOLT, RD CROWNED WA HD C/R M4.2X1.41X16POR	99-02	.....	8	11508231

cardiagn.com

3.		8.977	BOLT, RD CROWNED WA HD C/R M4.2X1.41X16POR (FRT S/D WDO FRT W/STR RET)	99-02		10	11508231
4.		N.S.	SEAL, FRT S/D INR PNL HOLE				
5.	7-N9	10.710	SEALING STRIP, FRT S/D WDO OTR	99-00	Y37	LH	10431426
	7-N9	10.710	SEALING STRIP, FRT S/D WDO OTR	99-00	Y37	RH	10447046
	7-N9	10.710	SEALING STRIP, FRT S/D WDO OTR	01-02	Y37	RH	10313426
	7-N9	10.710	SEALING STRIP, FRT S/D WDO OTR	01-02	Y37	LH	10313427
6.	7-N8	10.587	PLUG, FRT S/D INR PNL HOLE (POSN #1-6) (FITS 54.1MM HOLE) (RECTANGULAR)	99-02	Y	6	10283990
7.	7-N24	12.895	PANEL, FRT S/D OTR	99-02	Y	LH	12529725
8.	7-A7	14.683	CLIP, FRT S/D TR RET	99-02	Y	6	884154
9.		8.908	SCR LGE WASHER HEAD HI-LO BHL (FRT S/D T/PNL) (8.977)	99-02		3	11509231
10.		8.977	BOLT, RD CROWNED WA HD C/R M4.2X1.41X16POR (RF LIFT OFF PNL/WDO RR W/STR RET)	99-02		8	11508231
11.	7-N8	10.694	RETAINER, FRT S/D W/STR FRT UPR (METAL STRIP RETAINS FRT UPR W/STR) (10.695)	99-02	Y37	LH	10297742
	7-N8	10.694	RETAINER, FRT S/D W/STR FRT UPR (METAL STRIP RETAINS FRT UPR W/STR) (10.695)	99-02	Y37	RH	10297743
12.		8.908	SCR LGE WASHER HEAD HI-LO BHL (FRT S/D WDO OTR S/STR) (8.977)	99-02		2	11509231
13.	7-A7	14.683	NUT, FRT S/D TR PNL	99-02	Y	4	10403545
14.	7-A7	14.683	GROMMET, FRT S/D TR RET	99-02	Y	12	10291930
15.	7-N8	10.587	PLUG, FRT S/D INR PNL HOLE (POSN #7, 8) (FITS 23.1MM HOLE) (ROUND)	99-02	Y	4	10288134
16.	7-N8	10.694	RETAINER, FRT S/D W/STR (BLACK) (4.8 HOLE) (14.685)	99-02	Y37	6	20538173
17.		8.921	NUT, U TYPE, MULTI THD, PREV TORQ, M4.2X1.41TAP, 8.1REACH, 0.65-3.80 PNLS 1065 PZOR (RDO FRT SPKR) (AC-DELCO #11513599)	99-02		12	11513599
18.	7-A7	14.683	RETAINER, FRT S/D TR (MALE)	99-02	Y	6	10291929
19.	7-N8	10.694	WEATHERSTRIP, FRT S/D (EPDM COMBINATION) (INCLS 58)	99-02	Y	LH	10302723
	7-N8	10.694	WEATHERSTRIP, FRT S/D (EPDM COMBINATION) (INCLS 58)	99-02	Y	RH	10302724
20.	7-N4	9.650	SPEAKER, RDO FRT (AC-DELCO #16255371)	99-00	Y37 (UQ5)	2	16255371
	7-N4	9.650	SPEAKER, RDO FRT (3"TWIDDLER, 7"WOOFER, 100W AMP) (AC-DELCO #10447355)	99-02	Y (UZ6)	2	10447355

cardiagn.com

21.		8.977	SCREW, HEX W/FL WA M4.2X2.25X20 TAP POR (RDO FRT SPKR)	99–02		12	11508443
22.	7–N7	10.355	DEFLECTOR, FRT S/D WAT	99–02	Y	LH	10263411
	7–N7	10.355	DEFLECTOR, FRT S/D WAT	99–02	Y	RH	10263412
23.	7–N11	10.777	SWITCH, SI WDO	99–02	Y	RH	12135165
	7–N11	10.777	SWITCH, SI WDO (DRIVER (W/POWER MIRRORS W/MEMORY W/DOOR LOCKS))	01–02	Y (AAB)	LH	12135166
	7–N11	10.777	SWITCH, SI WDO (DRIVER) (W/POWER MIRRORS W/MEMORY W/DOOR LOCKS)) (& MIRRORS & DR LK)	99–02	Y (EXC AAB)	LH	12135167
24.	7–N3	9.262	DUCT, FRT S/D AIR	99–02	Y (UZ6)	LH	10267874
	7–N3	9.262	DUCT, FRT S/D AIR	99–00	Y37 (UQ5)	LH	10267874
25.	7–N8	10.512	HANDLE, FRT S/D I/S	99–02	Y	LH	10406533
	7–N8	10.512	HANDLE, FRT S/D I/S	99–02	Y	RH	10406534
26.	7–N8	10.515	BEZEL, FRT S/D I/S HDL	99–02	Y	LH	10406531
	7–N8	10.515	BEZEL, FRT S/D I/S HDL	99–02	Y	RH	10406532
27.	7–N3	9.262	SEAL, FRT S/D AIR DUCT	99–02	Y (UZ6)	LH	10267885
	7–N3	9.262	SEAL, FRT S/D AIR DUCT	99–00	Y37 (UQ5)	LH	10267885
28.	7–N5	9.665	SCREEN, RDO FRT S/D SPKR	99–02	Y	LH	10291755
	7–N5	9.665	SCREEN, RDO FRT S/D SPKR	99–02	Y	RH	10291756
29.	7–N5	9.665	EMBLEM, RDO FRT S/D SPKR GRL	99–02	Y (UZ6)	2	10291759
30.	7–N5	9.665	GRILLE, RDO FRT S/D SPKR (PART OF 41) (BLACK)	99–00	Y (UZ6, 19I)	RH	10274045
	7–N5	9.665	GRILLE, RDO FRT S/D SPKR (PART OF 41) (BLACK)	99–00	Y (UZ6, 19I)	LH	10274046
	7–N5	9.665	GRILLE, RDO FRT S/D SPKR (PART OF 41) (BLACK)	99–00	Y37 (UQ5, 19I)	LH	10291439
	7–N5	9.665	GRILLE, RDO FRT S/D SPKR (PART OF 41) (BLACK)	99–00	Y37 (UQ5, 19I)	RH	10291440
	7–N5	9.665	GRILLE, RDO FRT S/D SPKR (PART OF 41) (BLACK)	01–02	Y (19I)	RH	10274045
	7–N5	9.665	GRILLE, RDO FRT S/D SPKR (PART OF 41) (BLACK)	01–02	Y (19I)	LH	10274046
	7–N5	9.665	GRILLE, RDO FRT S/D SPKR (PART OF 41) (RED)	01–02	Y (70I)	LH	10409257
	7–N5	9.665	GRILLE, RDO FRT S/D SPKR (PART OF 41) (RED)	01–02	Y (70I)	RH	10409258
31.	7–A7	14.683	BOLT, FRT S/D T/PNL (12.810)	99–02	Y	4	10293378
32.	7–A9	14.691	HANDLE, FRT S/D PULL	99–02	Y	RH	22640132
	7–A9	14.691	HANDLE, FRT S/D PULL	99–02	Y	LH	22640133
33.	7–A9	14.691	PLUG, FRT S/D PULL HDL FIN	99–02	Y	2	10279471
34.	7–A8	14.688	RETAINER, FRT S/D WRNG REFL (PART OF 35) (GREEN) (10.240) (AC–DELCO #10038190)	99–02	Y	2	10038190
35.	7–A9	14.691	REFLECTOR, FRT S/D WRNG (CPS) (INCLS 34)	99–02	Y	2	10295148
36.		N.S.	PANEL, FRT S/D LWR TR				
37.		N.S.	PANEL, FRT S/D UPR TR				
38.		8.900	BOLT, M6X1X12, 9THD, 10 OD, 8.8, PO, MACH, HDR–PT, TORX DR (FRT S/D PULL HDL) (PART OF 41) (14.691)	99–02		2	10282678

cardiagn.com

39.	7–A9	14.691	BRACKET, FRT S/D PULL HDL	99–02	Y	LH	10267883
	7–A9	14.691	BRACKET, FRT S/D PULL HDL	99–02	Y	RH	10281822
40.	7–N7	10.355	ABSORBER, FRT S/D INR PNL UPR ENGY	99–02	Y	LH	10427263
	7–N7	10.355	ABSORBER, FRT S/D INR PNL UPR ENGY	99–02	Y	RH	10427275
41.	7–A8	14.685	TRIM, FRT S/D (CPS) (INCLS 30) (BLACK) (INCLUDES FRT S/D INNER SEALING STRIP)	99	Y (UZ6, 19I)	LH	10420164
	7–A8	14.685	TRIM, FRT S/D (CPS) (INCLS 30) (BLACK)	99–00	Y37 (UQ5, 19I)	RH	10441497
	7–A8	14.685	TRIM, FRT S/D (CPS) (INCLS 30) (BLACK) (INCLS INNER SEALING STRIP)	99–02	Y (UZ6, 19I)	RH	10441489
	7–A8	14.685	TRIM, FRT S/D (CPS) (INCLS 30) (BLACK) (INCLS INNER SEALING STRIP)	00–02	Y (UZ6, 19I)	LH	10441490
	7–A8	14.685	TRIM, FRT S/D (CPS) (INCLS 30) (BLACK)	99–00	Y37 (UQ5, 19I)	LH	10441498
	7–A8	14.685	TRIM, FRT S/D (CPS) (INCLS 30) (RED) (INCLS INNER SEALING STRIP)	01–02	Y (70I)	RH	10441495
	7–A8	14.685	TRIM, FRT S/D (CPS) (INCLS 30) (RED) (INCLS INNER SEALING STRIP)	01–02	Y (70I)	LH	10441496
42.	7–N11	11.175	PLATE, FRT S/D SILL TR (BLACK)	99–02	Y (19I)	LH	10430855
	7–N11	11.175	PLATE, FRT S/D SILL TR (BLACK)	99–02	Y (19I)	RH	10430856
43.	7–A9	14.731	PANEL, BODY L/PLR TR (BLACK)	99–02	Y (19I)	LH	10258547
	7–A9	14.731	PANEL, BODY L/PLR TR (BLACK)	99–02	Y (19I)	RH	10426020
44.		N.S.	PANEL, FRT S/D OPG FIN (INCLS 48, 52)				
45.		8.921	NUT, U TYPE, MULTI THD, PREV TORQ, M4.2X1.41TAP, 8.1REACH, 0.65–3.80 PNLS 1065 PZOR (FRT S/D OPG FIN PNL) (POSN #2) (AC–DELCO #11513599)	99–02		2	11513599
46.	7–N24	12.944	PANEL, BODY L/PLR INR (#55) (12.942)	99–02	Y07–37	RH	12458932
	7–N24	12.944	PANEL, BODY L/PLR INR (#55) (12.942)	99–02	Y07–37	LH	12458933
47.	7–A7	14.665	NUT, FRT S/D OPG FIN PNL (RING TO QTR PNL JOINT) (PAINT TO MATCH) (8.919)	99–02	Y	6	1629843
48.	7–A7	14.665	PANEL, FRT S/D OPG FIN (LWR) (PART OF 44)	99–02	Y	LH	10444701
	7–A7	14.665	PANEL, FRT S/D OPG FIN (LWR) (PART OF 44)	99–02	Y	RH	10444702
49.		8.977	SCREW, LG RD HD TORX TAP M4.2X1.41X20 SS BL OX (FRT S/D OPG FIN PNL)	99–02		4	16751144
50.	7–N6	10.056	RETAINER, W/S SI G/MLDG (PAINT TO MATCH) (FITS .18 HOLE, .7 LG, .43 OD, NYLON) (14.630)	99–02	Y	2	20540336
51.	7–C6	15.100	MOLDING, BODY SI FRT GARN (BLACK)	99–02	Y	LH	10274637

cardiagn.com

	7–C6	15.100	MOLDING, BODY SI FRT GARN (BLACK)	99–02	Y	RH	10274638
52.	7–A7	14.665	PANEL, FRT S/D OPG FIN (UPR) (PART OF 44) (12.942)	99–02	Y	LH	10418921
	7–A7	14.665	PANEL, FRT S/D OPG FIN (UPR) (PART OF 44) (12.942)	99–02	Y	RH	10418922
53.		N.S.	SEALING STRIP, FRT S/D OPG FIN PNL				
54.	7–N8	10.703	CLIP, FRT S/D WDO W/STR RET (RF PNL RET ALUM)	99–02	Y37	2	10408012
55.	7–N3	9.262	OUTLET, FRT S/D FRT AIR	99	Y (UZ6)	LH	10406518
	7–N3	9.262	OUTLET, FRT S/D FRT AIR	99–00	Y37 (UQ5)	LH	10406518
	7–N3	9.262	OUTLET, FRT S/D FRT AIR	00–02	Y	LH	10406518
56.	7–N7	10.351	DOOR, FRT SI (CPS)	99–02	Y	LH	10414235
	7–N7	10.351	DOOR, FRT SI (CPS)	99	Y	RH	10414236
	7–N7	10.351	DOOR, FRT SI (CPS)	00–02	Y	RH	10433526
57.	7–N11	11.175	PLATE, FRT S/D SILL TR (LOW GLOSS BLACK) (CORVETTE CROSSED FLAG LOGO)	99–02	Y	LH	10420975
	7–N11	11.175	PLATE, FRT S/D SILL TR (LOW GLOSS BLACK) (CORVETTE CROSSED FLAG LOGO)	99–02	Y	RH	10420976
58.	7–N8	10.694	RETAINER, FRT S/D W/STR (PART OF 19) (PAINT TO MATCH) (FITS .18 HOLE, .7 LG, .43 OD, NYLON) (14.630)	99–02	Y37	2	20540336
59.	7–N8	10.694	RETAINER, FRT S/D W/STR (PAINT TO MATCH) (FITS .18 HOLE, .7 LG, .43 OD, NYLON) (14.630)	99–02	Y37	2	20540336
60.	7–N24	12.895	SEAL, FRT S/D INR PNL HOLE (4 1/4"X7 1/2") (TRIM AS REQ'D) (15.492)	99–02	Y	AR	11515174

RPO DEFINITIONS
AAB – MEMORY DRIVER CONVENIENCE PACKAGE
UQ5 – SPEAKER SYSTEM,4,DUAL FRONT DOOR MOUNTED,DUAL EXTENDED RANGE QUARTER MOUNTED
UZ6 – SPEAKER SYSTEM 6, QUAD FRT DR MTD, DUAL QTR MTD
19I – INTERIOR TRIM,BLACK
70I – INTERIOR TRIM,TORCH RED

cardiagn.com

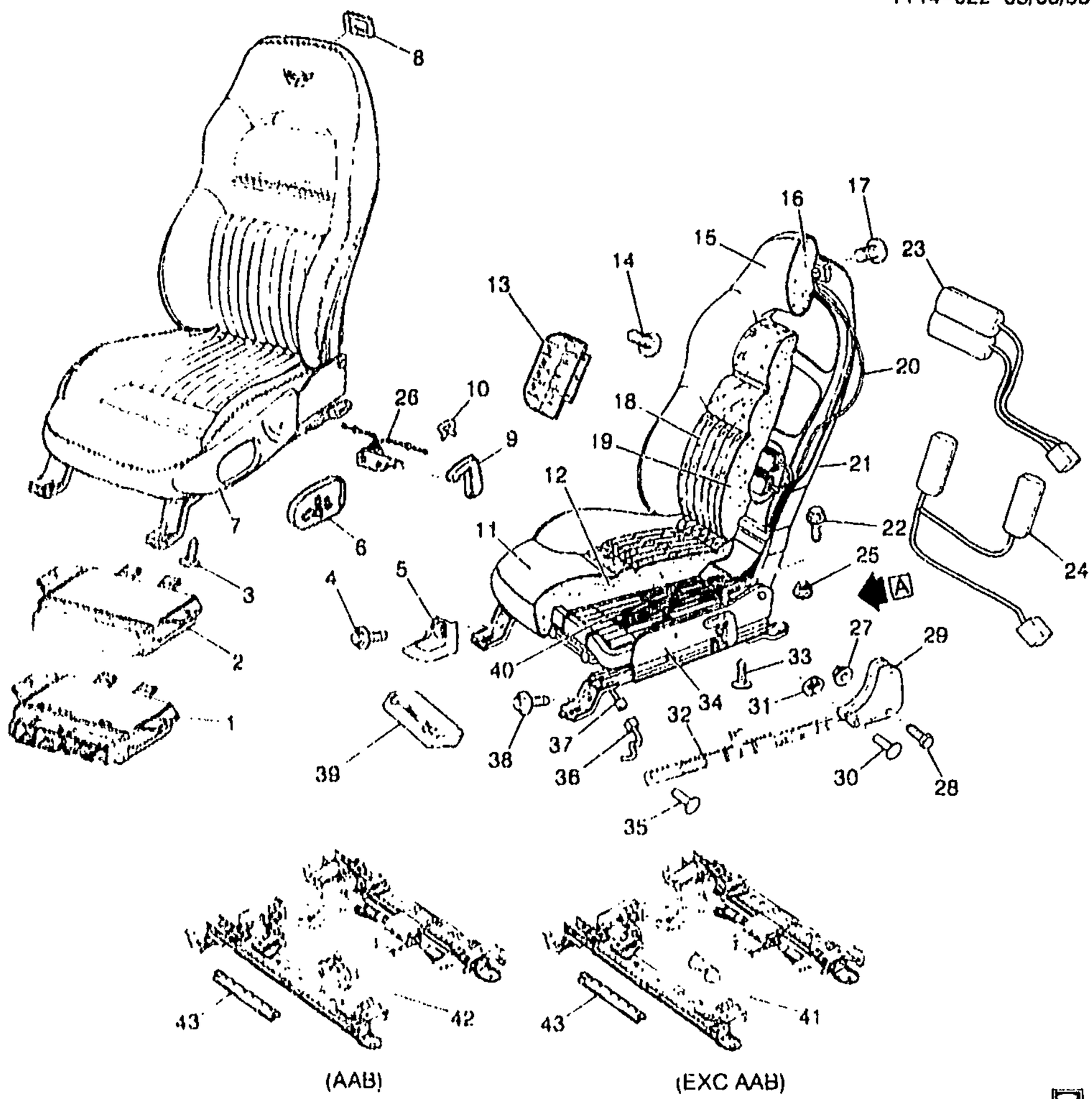

1Y14-022

1997 Y SEAT ASM/FRONT (AQ9)

1.	7-N10	11.555	MODULE, D/SEAT CONT	97	Y07 (AQ9, AR9)	1	9360R41
	7-N7	10.485	CONNECTOR, MDL- FRT S/D CONT (GREEN) (6-WAY F) (1C 263)	97	Y	2	12089527
	7-N7	10.485	CONNECTOR, MDL FRT S/D CONT (26-WAY F) (W/O LEADS)	97	Y	4	12160773

2001 GENERAL MOTORS SERVICE PARTS OPERATIONS CHEVROLET 15Y

cardiagn.com

							1Y14-022
	7-N7	10.485	CONNECTOR, MDL-FRT S/D CONT (6-WAY F W/LEADS) (10.090) (AC-DELCO #PT1032) .	97	Y	2	15305888
2.	7-N18	11.556	RELAY, ST ADJR	97	Y	1	10406008
3.		8.977	SCREW, M4.2-1X16 OV HD C/R STY 1 CB (D/ST CUSH OTR FIN) .	97		2	11501112
		8.977	SCREW, M4.2-1X16 OV HD C/R STY 1 CB (P/ST CUSH OTR FIN) .	97		2	11501112
4.	7-N20	11.573	RETAINER, D/SEAT INR ADJR FRT FIN CVR (PUSH IN) (1.272) . .	97	Y	1	10134407
	7-N20	11.573	RETAINER, P/SEAT INR ADJR FRT FIN CVR (PUSH IN) (1.272) . .	97	Y	1	10134407
5.	7-N20	11.573	COVER, D/SEAT ADJR FIN	97	Y	2	10246916
	7-N20	11.573	COVER, P/SEAT ADJR FIN	97	Y	2	10246916
6.	7-N18	11.558	SWITCH, D/SEAT ADJR (W/LUMBAR SWITCH)	97	Y (AQ9)	1	12135158
	7-N18	11.558	SWITCH, P/SEAT ADJR (W/LUMBAR SWITCH)	97	Y (AQ9)	1	12135158
7.	7-N12	11.362	PANEL, D/SEAT CUSH OTR FIN (3 ATTACHING HOLES)	97	Y	1	12455426
	7-N12	11.362	PANEL, P/SEAT CUSH OTR FIN (BLACK)	97	Y	1	10273008
8.	7-N16	11.390	BEZEL, D/SEAT BK CUSH LAT REL HDL (BLACK)	97	Y07 (AQ9, 193)	1	10288900
	7-N16	11.390	BEZEL, D/SEAT BK CUSH LAT REL HDL (RED)	97	Y (AQ9, 943)	1	10288901
	7-N16	11.390	BEZEL, D/SEAT BK CUSH LAT REL HDL (PEWTER)	97	Y (AQ9, 923)	1	10288902
	7-N16	11.390	BEZEL, P/SEAT BK CUSH LAT REL HDL (BLACK)	97	Y07 (AQ9, 193)	1	10288900
	7-N16	11.390	BEZEL, P/SEAT BK CUSH LAT REL HDL (RED)	97	Y (AQ9, 943)	1	10288901
	7-N16	11.390	BEZEL, P/SEAT BK CUSH LAT REL HDL (PEWTER)	97	Y (AQ9, 923)	1	10288902
9.	7-N14	11.377	HANDLE, D/SEAT RECL (EBONY)	97	Y	1	10272551
	7-N14	11.377	HANDLE, P/SEAT RECL	97	Y	1	10272552
10.	7-N14	11.377	SPRING, D/SEAT RECL HDL	97	Y	1	16749319
	7-N14	11.377	SPRING, P/SEAT RECL HDL	97	Y	1	16749319
11.	7-B5	14.880	COVER, D/SEAT CUSH (BLACK) (14.800)	97	Y (AQ9, 193)	1	12455447
	7-B5	14.880	COVER, D/SEAT CUSH (RED) (14.800)	97	Y (AQ9, 943)	1	12455448
	7-B5	14.880	COVER, D/SEAT CUSH (PEWTER)	97	Y (AQ9, 923)	1	12455449
	7-B5	14.880	COVER, P/SEAT CUSH (BLACK) (14.800)	97	Y (AG2, AQ9, 193)	1	12455447
	7-B5	14.880	COVER, P/SEAT CUSH (RED) (14.800)	97	Y (AG2, AQ9, 943)	1	12455448
	7-B5	14.880	COVER, P/SEAT CUSH (PEWTER)	97	Y (AG2, AQ9, 923)	1	12455449
12.	7-B6	14.890	PAD, D/SEAT CUSH	97	Y (AQ9)	1	10273420
	7-B6	14.890	PAD, P/SEAT CUSH	97	Y (AQ9)	1	10273420
13.	7-N16	11.379	BRACKET, D/SEAT BK CUSH SI BOLS ADJ (INR)	97	Y07 (AQ9, IL3)	RH	10285826
	7-N16	11.379	BRACKET, D/SEAT BK CUSH SI BOLS ADJ (INR) (11.378)	97	Y07 (AQ9, IL3)	RH	12455492

cardiagn.com

							1Y14–022
	7–N16	11.379	BRACKET, D/SEAT BK CUSH SI BOLS ADJ (OTR)	97	Y07 (AQ9, IL3)	LH	10285825
	7–N16	11.379	BRACKET, D/SEAT BK CUSH SI BOLS ADJ (OTR) (11.378)	97	Y07 (AQ9, IL3)	LH	12455492
	7–N16	11.379	BRACKET, P/SEAT BK CUSH SI BOLS ADJ (INR)	97	Y07 (AG2, AQ9, IL3) ...	LH	10285825
	7–N16	11.379	BRACKET, P/SEAT BK CUSH SI BOLS ADJ (INR) (11.378)	97	Y07 (AG2, AQ9, IL3) ...	LH	12455492
	7–N16	11.379	BRACKET, P/SEAT BK CUSH SI BOLS ADJ (OTR)	97	Y07 (AG2, AQ9, IL3) ...	RH	10285826
	7–N16	11.379	BRACKET, P/SEAT BK CUSH SI BOLS ADJ (OTR) (11.378)	97	Y07 (AG2, AQ9, IL3) ...	RH	12455492
14.	7–A12	14.804	RETAINER, D/SEAT BK CUSH SI INR FAC (FASTNER–PUSH–IN FITS HOLE 6.35, OD–25.4, LEN–18, SGL HEAD) (15.222) ...	97	Y07 (AQ9)	6	16674629
	7–A12	14.804	RETAINER, P/SEAT BK CUSH SI INR FAC (FASTNER–PUSH–IN FITS HOLE 6.35, OD–25.4, LEN–18, SGL HEAD) (15.222) ...	97	Y07 (AQ9)	6	16674629
15.	7–A9	14.800	COVER, D/SEAT BK CUSH (BLACK)	97	Y07 (AQ9, 193, AAB) ..	1	12455521
	7–A9	14.800	COVER, D/SEAT BK CUSH (RED)	97	Y07 (AQ9, 943)	1	12455522
	7–A9	14.800	COVER, D/SEAT BK CUSH (PEWTER)	97	Y07 (AQ9, 923)	1	12455523
	7–A9	14.800	COVER, P/SEAT BK CUSH (BLACK)	97	Y07 (AG2, AQ9, 193) ..	1	12455527
	7–A9	14.800	COVER, P/SEAT BK CUSH (RED)	97	Y07 (AG2, AQ9, 943) ..	1	12455528
	7–A9	14.800	COVER, P/SEAT BK CUSH (PEWTER)	97	Y07 (AG2, AQ9, 923) ..	1	12455529
	7–A9	14.800	COVER, P/SEAT BK CUSH (OAK)	97	Y07 (AG2, AQ9, 673) ..	1	12455530
16.	7–A11	14.802	PAD, D/SEAT BK CUSH (W/WIRE)	97	Y (AQ9, IL3)	1	10273418
	7–A11	14.802	PAD, P/SEAT BK CUSH	97	Y (AG2, AQ9, IL3)	1	10273418
17.	7–N12	11.368	RETAINER, D/SEAT BK CUSH FRM SUPT (12.800)	97	Y	2	20511451
	7–B6	14.890	RETAINER, P/SEAT BK CUSH PAD (12.800)	97	Y	2	20511451
18.	7–A9	14.800	COVER, D/SEAT BK CUSH INS (BLACK)	97	Y07 (AQ9, 193)	1	12455441
	7–A9	14.800	COVER, D/SEAT BK CUSH INS (RED)	97	Y (AQ9, 943)	1	12455442
	7–A9	14.800	COVER, D/SEAT BK CUSH INS (PEWTER)	97	Y (AQ9, 923)	1	12455443
	7–A12	14.804	COVER, P/SEAT BK CUSH INS (BLACK) (14.800)	97	Y07 (AG2, AQ9, 193) ..	1	12455441
	7–A12	14.804	COVER, P/SEAT BK CUSH INS (RED) (14.800)	97	Y (AG2, AQ9, 943)	1	12455442
	7–A12	14.804	COVER, P/SEAT BK CUSH INS (PEWTER) (14.800)	97	Y (AG2, AQ9, 923)	1	12455443
19.	7–A11	14.802	PAD, D/SEAT BK INS CVR	97	Y (AQ9, IL3)	1	10283891
	7–A11	14.802	PAD, P/SEAT BK INS CVR	97	Y (AG2, AQ9, IL3)	1	10283891
20.	7–N16	11.390	CABLE, D/SEAT BK CUSH LAT REL (BLACK)	97	Y07 (AQ9, 19I)	1	10288904
	7–N16	11.390	CABLE, D/SEAT BK CUSH LAT REL (RED)	97	Y07 (AQ9, 943)	1	10288905
	7–N16	11.390	CABLE, D/SEAT BK CUSH LAT REL (PEWTER)	97	Y07 (AQ9, 92I)	1	10288906

cardiagn.com

							1Y14–022
	7–N16	11.390	CABLE, P/SEAT BK CUSH LAT REL (BLACK)	97	Y07 (AR9, AQ9, 19I)	1	10288904
	7–N16	11.390	CABLE, P/SEAT BK CUSH LAT REL (RED)	97	Y07 (AQ9, 943)	1	10288905
	7–N16	11.390	CABLE, P/SEAT BK CUSH LAT REL (PEWTER)	97	Y07 (AQ9, 92I)	1	10288906
	7–N16	11.390	CABLE, P/SEAT BK CUSH LAT REL (PEWTER)	97	Y07 (AR9, AQ9, 92I)	1	10288906
21.	7–N12	11.373	FRAME, D/SEAT BK CUSH (USE W/TRIM CODES ENDING IN 3, 4)	97	Y (AQ9, IL3)	1	12455474
	7–N12	11.373	FRAME, P/SEAT BK CUSH (2 BLADDER SYSTEM MUST MODIFY–REVISE WINGS AND ADD 6 RIVET HOLES, PER GUIDE MARKS ON FRAME AS REQD. 1 BOLSTER SYSTEM 6 HOLES NOT REQD.)	97	Y (AQ9, AG2, IL3)	1	12455474
22.		8.900	BOLT, HEX, M8X1.25X16, 15 THD, 18 OD, 10.9, MAT, 7114M, FIN, MACH (D/ST)	97		4	11515755
		8.900	BOLT, HEX, M8X1.25X16, 15 THD, 18 OD, 10.9, MAT, 7114M, FIN, MACH (P/ST)	97		4	11515755
23.	7–N15	11.378	BLADDER, D/SEAT LUMBAR SUPT	97	Y07 (AQ9)	1	12455492
	7–N15	11.378	BLADDER, P/SEAT LUMBAR SUPT	97	Y07 (AQ9)	1	12455492
24.	7–N15	11.378	BLADDER, D/SEAT LATERAL SUPT	97	Y (AQ9)	2	12455492
	7–N15	11.378	BLADDER, P/SEAT LATERAL SUPT	97	Y (AQ9)	2	12455492
25.		8.915	NUT, HFH, 10X1.5 6H THD, 21.3 OD, 9.8 THK 13 HEX DR, GRD 9, ZF (D/ST ADJR) (8.917)	97		4	10255857
		8.915	NUT, HFH, 10X1.5 6H THD, 21.3 OD, 9.8 THK 13 HEX DR, GRD 9, ZF (P/ST ADJR) (8.917)	97		4	10255857
26.	7–N14	11.377	CABLE, P/SEAT RECL ACTR	97	Y	1	10278653
	7–N14	11.377	CABLE, D/SEAT RECL ACTR	97	Y	1	10278650
27.		8.917	NUT, HFH, M8X1.25, 17.9 OD, 738 THK, 13MM HEX, 10, ZF (ST BK CUSH PIV) (8.915) (AC–DELCO #11514596)	97		2	11514596
28.	7–N12	11.373	BOLT, D/SEAT BK CUSH FRM	97	Y	1	10277966
	7–N12	11.373	BOLT, P/SEAT BK CUSH FRM	97	Y	1	10277966
29.	7–N14	11.375	BRACKET, P/SEAT BK CUSH PIV	97	Y	2	10272746
	7–N14	11.375	BRACKET, D/SEAT BK CUSH PIV	97	Y	2	10272746
30.	7–N14	11.377	PIN, D/SEAT RECL (RR) (REAR)	97	Y	2	10277965
	7–N14	11.377	PIN, P/SEAT RECL (RR) (REAR)	97	Y	2	10277965
31.		8.934	RING–TYPE 3CM1 EXT TAP RD (6.700X15.80X.96, Z) (P/ST RECL PIN)	97		4	11515572
		8.934	RING–TYPE 3CM1 EXT TAP RD (6.700X15.80X.96, Z) (D/ST RECL PIN)	97		4	11515572
32.	7–N14	11.377	RECLINER, D/SEAT (INR)	97	Y	1	10272506
	7–N14	11.377	RECLINER, D/SEAT (OTR)	97	Y	1	10277957

cardiagn.com

							1Y14–022
	7–N14	11.377	RECLINER, P/SEAT (INR)	97	Y	1	10272506
	7–N14	11.377	RECLINER, P/SEAT (OTR)	97	Y	1	10277057
33.		8.906	SCREW, RD WA H, M4.2X1.41X20.8, 19.4 THD, 11.35 OD, GM6010M (P/SEAT RECL ACTR CBL) (8.977)	97		3	11516630
		8.906	SCREW, RD WA H, M4.2X1.41X20.8, 19.4 THD, 11.35 OD, GM6010M (D/SEAT RECL ACTR CBL) (8.977)	97		3	11516630
34.	7–N18	11.419	FRAME, D/SEAT CUSH (3 ATTACHING HOLES FOR CUSHION PANEL)	97	Y	1	12455425
	7–N18	11.419	FRAME, P/SEAT CUSH (3 ATTACHING HOLES FOR CUSHION PANEL)	97	Y	1	12455425
	7–N18	11.419	RIVET, D/SEAT CUSH FRM	97	Y	12	10285827
	7–N18	11.419	RIVET, P/SEAT CUSH FRM	97	Y07	12	10285827
35.	7–N14	11.377	PIN, D/SEAT RECL (FRT) (WIRE SPIRAL PIN)	97	Y	2	10403494
	7–N14	11.377	PIN, P/SEAT RECL (FRT) (WIRE SPIRAL PIN)	97	Y	2	10403494
36.	7–N26	13.090	HARNESS, BODY FRT WRG	97	Y07	1	12189550
37.	7–A13	14.865	HARNESS, INFLR AIR WRG	97	Y (AQ9, IL3) (EXC AAB)	1	10296617
	7–A13	14.865	HARNESS, INFLR AIR WRG	97	Y (AQ9, IL3) (EXC AAB)	1	10401715
	7–A13	14.865	HARNESS, INFLR AIR WRG	97	Y (AAB, AQ9, IL3)	1	10410689
	7–A13	14.865	HARNESS, INFLR AIR WRG	97	Y (AG2, AQ9, IL3)	1	10410690
38.	7–N20	11.573	RETAINER, D/SEAT OTR ADJR FRT FIN CVR (PUSH IN) (1.272)	97	Y	1	10134407
	7–N20	11.573	RETAINER, P/SEAT OTR ADJR FRT FIN CVR (PUSH IN) (1.272)	97	Y	1	10134407
39.	7–N15	11.378	PUMP, D/SEAT & P/SEAT CUSH AIR	97	Y (AQ9, IL3)	1	10273427
40.	7–N18	11.419	WIRE, D/SEAT CUSH PAD SUPT	97	Y	1	10272689
	7–N18	11.419	WIRE, P/SEAT CUSH PAD SUPT	97	Y	1	10272689
41.	7–N19	11.561	ADJUSTER, D/SEAT (W/O MEMORY)	97	Y	1	12455535
	7–N19	11.561	ADJUSTER, P/SEAT (W/PWR)	97	Y	1	12455534
42.	7–N19	11.561	ADJUSTER, D/SEAT (W/MEMORY)	97	Y	1	12455481
43.		N.S.	BRACKET, D/SEAT ADJR FRT (W/MEMORY)	97			
		N.S.	BRACKET, P/SEAT ADJR FRT (W/MEMORY)	97			

RPO DEFINITIONS

AAB – MEMORY DRIVER CONVENIENCE PACKAGE
AG2 – ADJUSTER,SEAT,6–WAY POWER,SPLIT BENCH,PASSENGER
AQ9 – SEAT,FRONT BUCKET,DRIVER,PASSENGER,RECLINING
AR9 – SEAT,FRONT BUCKET,DRIVER,PASSENGER,MANUAL RECLINING(EUROPEAN STYLE)
IL3 – TRIM,INTERIOR DESIGN
191 – INTERIOR TRIM,BLACK
193 – TRIM COMBINATION,BLACK LEATHER
673 – TRIM COMBINATION – LEATHER, OAK
921 – INTERIOR TRIM SHALE/PEWTER
923 – TRIM COMBINATION LEATHER, SHALE/PEWTER
943 – TRIM COMBINATION,LEATHER,LT QUARTZ

cardiagn.com

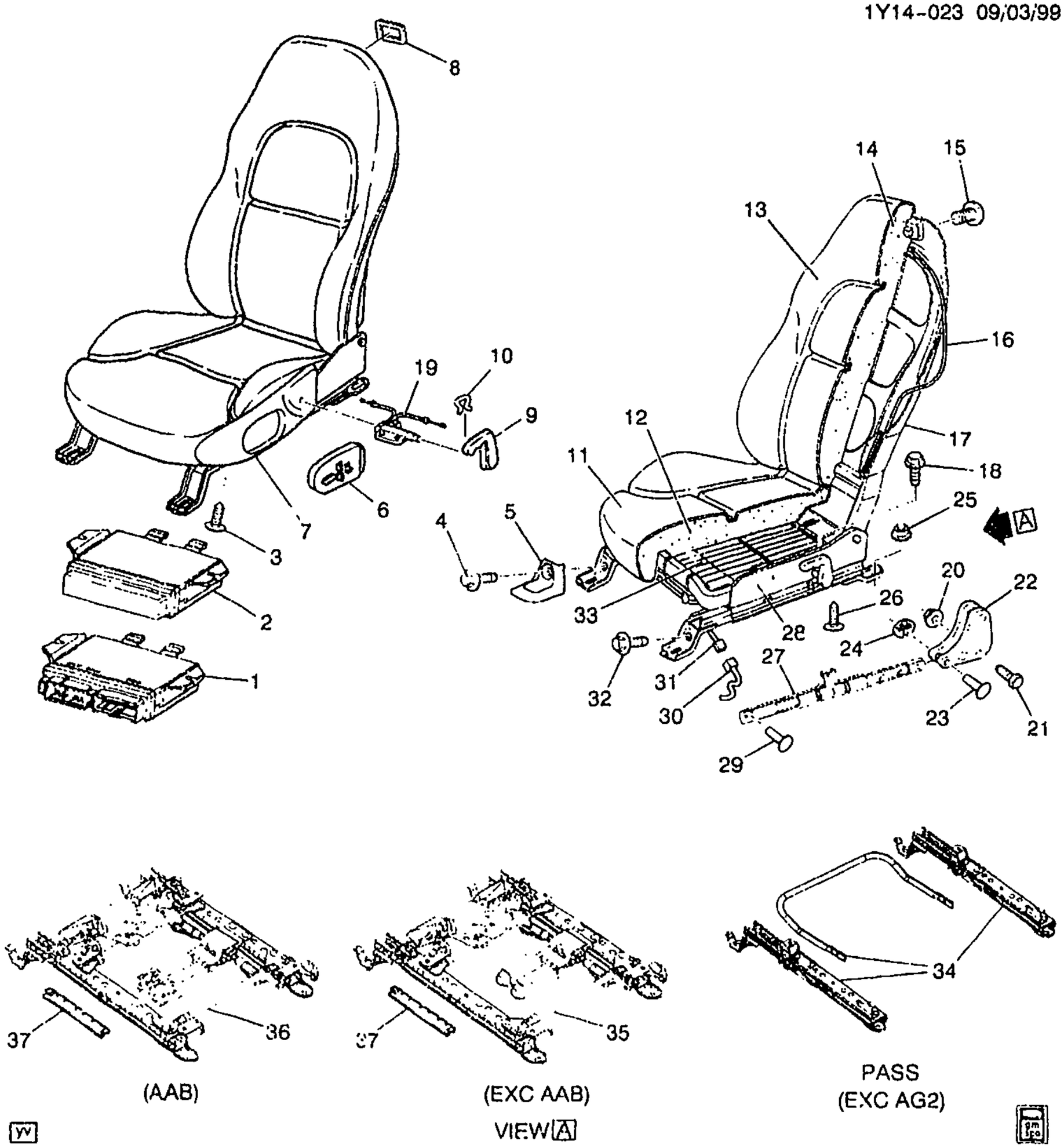

1Y14-023

1997-2002 Y SEAT ASM/FRONT (AR9)

1.	7-N18	11.558	MODULE, D/SEAT CONT	97	Y07 (AQ9, AR9)	1	9360841
	7-N18	11.558	MODULE, D/SEAT CONT	98-99	Y07-67 (AAB, AR9) ...	1	9360841
	7-N18	11.558	MODULE, D/SEAT CONT	00-02	Y (AAB, AR9)	1	10435193
2.	7-N18	11.556	RELAY, ST ADJR	97-02	Y	1	10406008
3.		8.977	SCREW, M4.2-1X16 OV HD C/R STY 1 CB (D/ST CUSH OTR FIN) .	97-02	....	2	11501112

cardiagn.com

						1Y14–023	
		8.977	SCREW, M4.2–1X16 OV HD C/R STY 1 CB (P/ST CUSH OTR FIN) .	97–02	.....	2	11501112
4.	7–N20	11.573	RETAINER, D/SEAT INR ADJR FRT FIN CVR (PUSH IN) (1.272) ..	97–02	Y	1	10134407
	7–N20	11.573	RETAINER, P/SEAT INR ADJR FRT FIN CVR (PUSH IN) (1.272) ..	97–02	Y	1	10134407
5.	7–N20	11.573	COVER, P/SEAT ADJR FIN	97–02	Y	2	10246916
	7–N20	11.573	COVER, D/SEAT ADJR FIN	97–02	Y	2	10246916
6.	7–N18	11.558	SWITCH, D/SEAT ADJR	97–02	Y (AR9)	1	12135159
7.	7–N12	11.362	PANEL, D/SEAT CUSH OTR FIN (3 ATTACHING HOLES)	97–98	Y	1	12455426
	7–N12	11.362	PANEL, D/SEAT CUSH OTR FIN (3 ATTACHING HOLES)	99–02	Y07–67	1	12455426
	7–N12	11.362	PANEL, D/SEAT CUSH OTR FIN (3 ATTACHING HOLES)	99–02	Y37 (AR9)	1	12455426
	7–N12	11.362	PANEL, P/SEAT CUSH OTR FIN (BLACK)	97	Y	1	10273008
	7–N12	11.362	PANEL, P/SEAT CUSH OTR FIN .	98–02	Y07–67	1	12455427
8.	7–N16	11.390	BEZEL, D/SEAT BK CUSH LAT REL HDL (BLACK)	97–02	Y (AR9, 19I)	1	10288900
	7–N16	11.390	BEZEL, D/SEAT BK CUSH LAT REL HDL (RED)	97–99	Y (AR9, 94I)	1	10288901
	7–N16	11.390	BEZEL, D/SEAT BK CUSH LAT REL HDL (PEWTER)	97–01	Y (AR9, 92I)	1	10288902
	7–N16	11.390	BEZEL, D/SEAT BK CUSH LAT REL HDL (CAMEL)	98–01	Y (AR9, 67I)	1	10288903
	7–N16	11.390	BEZEL, D/SEAT BK CUSH LAT REL HDL (RED)	00–02	Y (AR9, 70I)	1	10408563
	7–N16	11.390	BEZEL, P/SEAT BK CUSH LAT REL HDL (BLACK)	97–02	Y (AR9, 19I)	1	10288900
	7–N16	11.390	BEZEL, P/SEAT BK CUSH LAT REL HDL (RED)	97–99	Y (AR9, 94I)	1	10288901
	7–N16	11.390	BEZEL, P/SEAT BK CUSH LAT REL HDL (PEWTER)	97–02	Y (AR9, 92I)	1	10288902
	7–N16	11.390	BEZEL, P/SEAT BK CUSH LAT REL HDL (CAMEL)	98–02	Y (AR9, 67I)	1	10288903
	7–N16	11.390	BEZEL, P/SEAT BK CUSH LAT REL HDL (RED)	00	Y (AR9, 70I)	1	10408563
9.	7–N14	11.377	HANDLE, D/SEAT RECL (EBONY)	97–02	Y	1	10272551
	7–N14	11.377	HANDLE, P/SEAT RECL	97–02	Y	1	10272552
10.	7–N14	11.377	SPRING, D/SEAT RECL HDL	97–02	Y	1	16749319
	7–N14	11.377	SPRING, P/SEAT RECL HDL	97–01	Y	1	16749319
	7–N14	11.377	SPRING, P/SEAT RECL HDL	02	Y37 (AR9)	1	16749319
11.	7–B5	14.880	COVER, D/SEAT CUSH (BLACK) (14.800)	97–98	Y (AR9, 193)	1	12455465
	7–B5	14.880	COVER, D/SEAT CUSH (RED) ...	97–99	Y07–67 (AR9, 943)	1	12455466
	7–B5	14.880	COVER, D/SEAT CUSH (PEWTER) (14.800)	97–98	Y (AR9, 923)	1	12455467
	7–B5	14.880	COVER, D/SEAT CUSH (CAMEL) (14.800)	98	Y (AR9, 673)	1	12455468
	7–B5	14.880	COVER, D/SEAT CUSH (BLACK) (14.800)	99–02	Y07–67 (AR9, 193)	1	12455465
	7–B5	14.880	COVER, D/SEAT CUSH (PEWTER) (14.800)	99–02	Y07–67 (AR9, 923)	1	12455467
	7–B5	14.880	COVER, D/SEAT CUSH (CAMEL) (14.800)	99–02	Y07–67 (AR9, 673) . ..	1	12455468
	7–B5	14.880	COVER, D/SEAT CUSH (RED) ...	00–02	Y07–67 (AR9, 703)	1	12455469

cardiagn.com

	7-B5	14.880	COVER, D/SEAT CUSH (BLACK) .	01-02	Y37 (AR9, 194)	1	12455499
	7-B5	14.880	COVER, D/SEAT CUSH (RED) ...	01-02	Y37 (AR9, 704)	1	12455502
	7-B5	14.880	COVER, P/SEAT CUSH (BLACK) (14.800)	97-02	Y (AR9, 193)	1	12455465
	7-B5	14.880	COVER, P/SEAT CUSH (RED) ...	97-99	Y07-67 (AR9, 943)	1	12455466
	7-B5	14.880	COVER, P/SEAT CUSH (PEWTER) (14.800)	97-98	Y (AR9, 923)	1	12455467
	7-B5	14.880	COVER, P/SEAT CUSH (CAMEL) (14.800)	98	Y (AR9, 673)	1	12455468
	7-B5	14.880	COVER, P/SEAT CUSH (PEWTER) (14.800)	99-02	Y07-67 (AR9, 923)	1	12455467
	7-B5	14.880	COVER, P/SEAT CUSH (CAMEL) (14.800)	99-02	Y07-67 (AR9, 673)	1	12455468
	7-B5	14.880	COVER, P/SEAT CUSH (BLACK) .	01-02	Y37 (AR9, 194)	1	12455499
	7-B5	14.880	COVER, P/SEAT CUSH (RED) ...	01-02	Y37 (AR9, 704)	1	12455502
12.	7-B6	14.890	PAD, D/SEAT CUSH	97-02	Y (AR9)	1	10272680
	7-B6	14.890	PAD, D/SEAT CUSH	02	Y07	1	10273420
	7-B6	14.890	PAD, P/SEAT CUSH	97-02	Y (AR9)	1	10272680
13.	7-A9	14.800	COVER, D/SEAT BK CUSH (BLACK)	97-00	Y (AR9, 193)	1	12455509
	7-A9	14.800	COVER, D/SEAT BK CUSH (RED)	97-98	Y (AR9, 943)	1	12455510
	7-A9	14.800	COVER, D/SEAT BK CUSH (PEWTER)	97-98	Y (AR9, 923)	1	12455511
	7-A9	14.800	COVER, D/SEAT BK CUSH (OAK)	98	Y (AR9, 673)	1	12455512
	7-A9	14.800	COVER, D/SEAT BK CUSH (RED)	99	Y07-67 (AR9, 943)	1	12455510
	7-A9	14.800	COVER, D/SEAT BK CUSH (PEWTER)	99-02	Y07-67 (AR9, 923)	1	12455511
	7-A9	14.800	COVER, D/SEAT BK CUSH (OAK)	99-02	Y07-67 (AR9, 673)	1	12455512
	7-A9	14.800	COVER, D/SEAT BK CUSH (RED)	00-02	Y (AR9, 703)	1	12455513
	7-A9	14.800	COVER, D/SEAT BK CUSH (BLACK)	01-02	Y07-67 (AR9, 193)	1	12455509
	7-A9	14.800	COVER, D/SEAT BK CUSH (BLACK)	01-02	Y37 (AR9, 194)	1	12455500
	7-A9	14.800	COVER, D/SEAT BK CUSH (RED)	01-02	Y37 (AR9, 704)	1	12455503
	7-A9	14.800	COVER, P/SEAT BK CUSH (BLACK)	97-02	Y (AR9, 193)	1	12455515
	7-A9	14.800	COVER, P/SEAT BK CUSH (RED)	97-98	Y (AR9, 943)	1	12455516
	7-A9	14.800	COVER, P/SEAT BK CUSH (PEWTER)	97-98	Y (AR9, 923)	1	12455517
	7-A9	14.800	COVER, P/SEAT BK CUSH (OAK)	98	Y (AR9, 673)	1	12455518
	7-A9	14.800	COVER, P/SEAT BK CUSH (RED)	99	Y07-67 (AR9, 943)	1	12455516
	7-A9	14.800	COVER, P/SEAT BK CUSH (PEWTER)	99-02	Y07-67 (AR9, 923)	1	12455517
	7-A9	14.800	COVER, P/SEAT BK CUSH (OAK)	99-02	Y07-67 (AR9, 673)	1	12455518
	7-A9	14.800	COVER, P/SEAT BK CUSH (RED)	00-02	Y07-67 (AR9, 703)	1	12455519
	7-A9	14.800	COVER, P/SEAT BK CUSH (BLACK)	01-02	Y37 (AR9, 194)	1	12455501
	7-A9	14.800	COVER, P/SEAT BK CUSH (RED)	01-02	Y37 (AR9, 704)	1	12455504
14.	7-A11	14.802	PAD, D/SEAT BK CUSH (W/WIRE)	97-00	Y (AR9)	1	10272678
	7-A11	14.802	PAD, D/SEAT BK CUSH (W/WIRE)	01-02	Y07-67 (AR9)	1	12455532
	7-A11	14.802	PAD, D/SEAT BK CUSH (W/WIRE)	01-02	Y37 (AR9) (EXC AAB) ..	1	12455532
	7-A11	14.802	PAD, D/SEAT BK CUSH (W/WIRE)	02	Y07-67 (AR9)	1	10272678
	7-A11	14.802	PAD, P/SEAT BK CUSH	97-00	Y (AR9)	1	10272678

cardiagn.com

							1Y14-023
	7-A11	14.802	PAD, P/SEAT BK CUSH	01-02	Y07-67 (AR9)	1	10272678
15.	7-N12	14.368	RETAINER, D/SEAT BK CUSH FRM SUPT (12.800)	97-02	Y	2	20511451
	7-B6	14.890	RETAINER, P/SEAT BK CUSH PAD (12.800)	97-02	Y	2	20511451
16.	7-N16	11.390	CABLE, D/SEAT BK CUSH LAT REL (BLACK)	97-02	Y07 (AR9, 19I)	1	10288904
	7-N16	11.390	CABLE, D/SEAT BK CUSH LAT REL (RED)	97-99	Y07 (AR9, 943)	1	10288905
	7-N16	11.390	CABLE, D/SEAT BK CUSH LAT REL (PEWTER)	97-02	Y07 (AR9, 92I)	1	10288906
	7-N16	11.390	CABLE, D/SEAT BK CUSH LAT REL (OAK)	98-02	Y07 (AQ9, AR9, 67I) ...	1	10288907
	7-N16	11.390	CABLE, D/SEAT BK CUSH LAT REL (BLACK) (W/LEVER) (W/2 PIGTAILS)	98-02	Y67	1	10409022
	7-N16	11.390	CABLE, D/SEAT BK CUSH LAT REL (BLACK)	99-02	Y37 (AR9, 19I) (EXC AAB)	1	10288904
	7-N16	11.390	CABLE, D/SEAT BK CUSH LAT REL (RED)	00-02	Y07 (AR9, AQ9, 70I) ...	1	10408562
	7-N16	11.390	CABLE, D/SEAT BK CUSH LAT REL (RED)	01-02	Y37 (AR9, 70I)	1	10408562
	7-N16	11.390	CABLE, P/SEAT BK CUSH LAT REL (BLACK)	97-02	Y07 (AR9, AQ9, 19I) ...	1	10288904
	7-N16	11.390	CABLE, P/SEAT BK CUSH LAT REL (RED)	97-99	Y07 (AR9, 943)	1	10288905
	7-N16	11.390	CABLE, P/SEAT BK CUSH LAT REL (PEWTER)	97-02	Y07 (AR9, AQ9, 92I) ...	1	10288906
	7-N16	11.390	CABLE, P/SEAT BK CUSH LAT REL (OAK)	98-02	Y07 (AR9, AQ9, 67I) ...	1	10288907
	7-N16	11.390	CABLE, P/SEAT BK CUSH LAT REL (W/1 PIGTAIL)	98-02	Y07-67 (AR9, AQ9) ...	2	12455538
	7-N16	11.390	CABLE, P/SEAT BK CUSH LAT REL (BLACK) (W/LEVER) (W/2 PIGTAILS)	98-02	Y67	1	10409022
	7-N16	11.390	CABLE, P/SEAT BK CUSH LAT REL (BLACK)	99-00	Y37 (AR9, 19I)	1	10288904
	7-N16	11.390	CABLE, P/SEAT BK CUSH LAT REL (W/1 PIGTAIL)	99-02	Y37 (AR9)	2	12455538
17.	7-N12	11.373	FRAME, P/SEAT BK CUSH	98-99	Y07 (AR9)	1	12455536
	7-N12	11.373	FRAME, P/SEAT BK CUSH	98	Y67 (AAB, AR9)	1	12455536
	7-N12	11.373	FRAME, P/SEAT BK CUSH	97-99	Y (AR9)	1	12455474
	7-N12	11.373	FRAME, P/SEAT BK CUSH	99-02	Y (AR9)	1	12455536
	7-N12	11.373	FRAME, P/SEAT BK CUSH	99-00	Y37 (AR9)	1	12455536
	7-N12	11.373	FRAME, D/SEAT BK CUSH	98-00	Y67 (AAB, AR9)	1	12455536
	7-N12	11.373	FRAME, D/SEAT BK CUSH	97-99	Y (AR9)	1	12455474
	7-N12	11.373	FRAME, D/SEAT BK CUSH	99-02	Y37 (AR9)	1	12455536
	7-N12	11.373	FRAME, D/SEAT BK CUSH	99-00	Y37 (AR9) (EXC AAB) ..	1	12455536
	7-N12	11.373	FRAME, D/SEAT BK CUSH	00	Y (AR9)	1	12455536
	7-N12	11.373	FRAME, D/SEAT BK CUSH	01-02	Y67 (AR9)	1	12455536
	7-N12	11.373	FRAME, D/SEAT BK CUSH	02	Y07	1	12455536
18.		8.900	BOLT, HEX, M8X1.25X16, 15 THD, 18 OD, 10.9, MAT, 7114M, FIN, MACH (D/ST)	97-02	.....	4	11515755
		8.900	BOLT, HEX, M8X1.25X16, 15 THD, 18 OD, 10.9, MAT, 7114M, FIN, MACH (P/ST)	97-02	.....	4	11515755

cardiagn.com

							7Y14-023
19.	7-N14	11.377	CABLE, P/SEAT RECL ACTR	97-02	Y	1	10278653
	7-N14	11.377	CABLE, D/SEAT RECL ACTR	97-02	Y	1	10278650
20.		8.917	NUT, HFH, M8X1.25, 17.9 OD, 738 THK 13MM HEX, 10, ZF (ST BK CUSH PIV) (8.915) (AC-DELCO #11514596)	97-02	.....	2	11514596
21.	7-N12	11.373	BOLT, D/SEAT BK CUSH FRM ...	97-02	Y	1	10277966
	7-N12	11.373	BOLT, P/SEAT BK CUSH FRM ...	97-02	Y	1	10277966
22.	7-N14	11.375	BRACKET, P/SEAT BK CUSH PIV	97-02	Y	2	10272746
	7-N14	11.375	BRACKET, D/SEAT BK CUSH PIV	97-02	Y	2	10272746
23.	7-N14	11.377	PIN, D/SEAT RECL (RR) (REAR) .	97-02	Y	2	10277965
	7-N14	11.377	PIN, P/SEAT RECL (RR) (REAR) .	97-02	Y	2	10277965
24.		8.934	RING-TYPE 3CM1 EXT TAP RD (6.700X15.80X.96, Z) (P/ST RECL PIN)	97-02	.....	4	11515572
		8.934	RING-TYPE 3CM1 EXT TAP RD (6.700X15.80X.96, Z) (D/ST RECL PIN)	97-02	.....	4	11515572
25.		8.915	NUT, HFH, 10X1.5 6H THD, 21.3 OD, 9.8 THK 13 HEX DR, GRD 9, ZF (D/ST ADJR) (8.917)	97-02	.....	4	10255857
		8.915	NUT, HFH, 10X1.5 6H THD, 21.3 OD, 9.8 THK 13 HEX DR, GRD 9, ZF (P/ST ADJR) (8.917)	97-02	.....	4	10255857
26.		8.906	SCREW, RD WA H, M4.2X1.41X20.8, 19.4 THD, 11.35 OD, GM6010M (P/SEAT RECL ACTR CBL) (8.977)	97-02	.....	3	11516630
		8.906	SCREW, RD WA H, M4.2X1.41X20.8, 19.4 THD, 11.35 OD, GM6010M (D/SEAT RECL ACTR CBL) (8.977)	97-02	.....	3	11516630
27.	7-N14	11.377	RECLINER, D/SEAT (INR)	97-02	Y	1	10272506
	7-N14	11.377	RECLINER, D/SEAT (OTR)	97-02	Y	1	10277957
	7-N14	11.377	RECLINER, P/SEAT (INR)	97-02	Y	1	10272506
	7-N14	11.377	RECLINER, P/SEAT (OTR)	97-02	Y	1	10277957
	7-N14	11.377	BOLT, D/SEAT RECL (M8X1.25X21 16.3 O.D.) (RR) (11.390)	97	Y (AR9)	1	14089631
28.	7-N18	11.419	FRAME, D/SEAT CUSH (3 ATTACHING HOLES FOR CUSHION PANEL)	97-02	Y	1	12455425
	7-N18	11.419	FRAME, P/SEAT CUSH (3 ATTACHING HOLES FOR CUSHION PANEL)	97-02	Y	1	12455425
	7-N18	11.419	RIVET, D/SEAT CUSH FRM	97	Y	12	10285827
	7-N18	11.419	RIVET, P/SEAT CUSH FRM	97	Y07	12	10285827
	7-N20	11.589	WIRE, D/SEAT ADJR LAT	99	Y37	1	12455472
29.	7-N14	11.377	PIN, D/SEAT RECL (FRT) (WIRE SPIRAL PIN)	97	Y	2	10403494
	7-N14	11.377	PIN, D/SEAT RECL (FRT) (WIRE SPIRAL PIN)	98-02	Y	2	10403494
	7-N14	11.377	PIN, P/SEAT RECL (FRT) (WIRE SPIRAL PIN)	97	Y	2	10403494
	7-N14	11.377	PIN, P/SEAT RECL (FRT) (WIRE SPIRAL PIN)	98-02	Y	2	10403494
30.	7-N26	13.090	HARNESS, BODY FRT WRG	97-98	Y07	1	12189550

cardiagn.com

	7-N26	13.090	HARNESS, BODY FRT WRG	98	Y67 (UZ6)	1	12189958
	7-N26	13.090	HARNESS, BODY FRT WRG	99-00	Y07 (EXC U1S)	1	12189597
	7-N26	13.090	HARNESS, BODY FRT WRG	99-00	Y07 (U1S)	1	12189889
	7-N26	13.090	HARNESS, BODY FRT WRG	99-00	Y37 (U1S)	1	12163772
	7-N26	13.090	HARNESS, BODY FRT WRG	99-00	Y37 (EXC U1S)	1	12189595
	7-N26	13.090	HARNESS, BODY FRT WRG	99-00	Y67 (EXC U1S)	1	12189599
	7-N26	13.090	HARNESS, BODY FRT WRG	99-00	Y67 (U1S)	1	12189962
	7-N26	13.090	HARNESS, BODY FRT WRG	01-02	YY07 (UZ6) (EXC U1S) .	1	15329382
	7-N26	13.090	HARNESS, BODY FRT WRG	01-02	YY07 (UZ6, U1S)	1	15329383
	7-N26	13.090	HARNESS, BODY FRT WRG	01-02	YY37	1	15329378
	7-N26	13.090	HARNESS, BODY FRT WRG	01-02	YY67 (UZ6) (EXC U1S) .	1	15329386
	7-N26	13.090	HARNESS, BODY FRT WRG	01-02	YY67 (UZ6, U1S)	1	15329387
31.	7-N26	13.090	HARNESS, D/SEAT ADJR WRG .	97-98	Y (AAB, AR9)	1	10410580
	7-N26	13.090	HARNESS, D/SEAT ADJR WRG .	97	Y07 (AR9) (EXC AAB) ..	1	10410691
	7-N26	13.090	HARNESS, D/SEAT ADJR WRG .	98-00	Y07-67 (AR9) (EXC AAB)	1	10410691
	7-N26	13.090	HARNESS, D/SEAT ADJR WRG .	99-00	Y07-67 (AAB, AR9) (EXC N37)	1	10410580
	7-N26	13.090	HARNESS, D/SEAT ADJR WRG .	99-00	Y07-67 (AAB, AR9, N37)	1	12455471
	7-N26	13.090	HARNESS, D/SEAT ADJR WRG .	99-00	Y37 (AG1, AR9) (EXC AAB)	1	10410691
	7-N26	13.090	HARNESS, D/SEAT ADJR WRG .	01-02	Y07-67 (AR9)	1	10410691
	7-N26	13.090	HARNESS, D/SEAT ADJR WRG .	01	Y37 (AAB, AR9)	1	10410580
	7-N26	13.090	HARNESS, D/SEAT ADJR WRG .	01-02	Y37 (AR9) (EXC AAB) ..	1	10410691
	7-N26	13.090	HARNESS, D/SEAT ADJR WRG .	02	YY37 (AAB, AR9)	1	10410580
	7-N26	13.090	HARNESS, P/SEAT ADJR WRG ..	97	Y07 (AG2, AR9)	1	10410692
	7-N26	13.090	HARNESS, P/SEAT ADJR WRG ..	98-01	Y07-67 (AG2, AR9) ...	1	10410692
32.	7-N20	11.573	RETAINER, D/SEAT OTR ADJR FRT FIN CVR (PUSH IN) (1.272) ..	97-02	Y	1	10134407
	7-N20	11.573	RETAINER, P/SEAT OTR ADJR FRT FIN CVR (PUSH IN) (1.272) ..	97-02	Y	1	10134407
33.	7-N18	11.419	WIRE, D/SEAT CUSH PAD SUPT .	97-02	Y	1	10272689
	7-N18	11.419	WIRE, P/SEAT CUSH PAD SUPT .	97-02	Y	1	10272689
34.	7-N19	11.561	ADJUSTER, P/SEAT (W/O 6-WAY PWR)	97-02	Y	1	10257906
35.	7-N19	11.561	ADJUSTER, D/SEAT (W/O MEMORY)	97-00	Y07 (AR9) (EXC AAB) ..	1	12455535
	7-N19	11.561	ADJUSTER, D/SEAT (W/O MEMORY)	97	Y (AR9, AAB)	1	88898621
	7-N19	11.561	ADJUSTER, D/SEAT (W/O MEMORY)	98-00	Y07-67 (AR9, AAB) ...	1	88898621
	7-N19	11.561	ADJUSTER, D/SEAT (W/O MEMORY)	98-00	Y67 (AR9) (EXC AAB) ..	1	12455535
	7-N19	11.561	ADJUSTER, D/SEAT (W/O MEMORY) (2 WAY)	99-00	Y37 (AR9) (EXC AG1) ..	1	10257833
	7-N19	11.561	ADJUSTER, D/SEAT (W/O MEMORY)	99-00	Y37 (AG1, AR9) (EXC AAB)	1	12455535
	7-N19	11.561	ADJUSTER, D/SEAT (W/O MEMORY)	01-02	Y07-67 (AR9) (EXC AAB)	1	88898622
	7-N19	11.561	ADJUSTER, D/SEAT (W/O MEMORY)	01-02	Y37 (AR9, AAB)	1	88898621
	7-N19	11.561	ADJUSTER, D/SEAT (W/O MEMORY)	01-02	Y37 (AR9) (EXC AAB) ..	1	88898622
	7-N19	11.561	ADJUSTER, P/SEAT (W/PWR) ...	97-98	Y (AR9) (EXC AG2)	1	10257906
	7-N19	11.561	ADJUSTER, P/SEAT (W/PWR) ...	98-00	Y07-67 (AG2, AQ9, AR9)	1	12455534
	7-N19	11.561	ADJUSTER, P/SEAT (W/PWR) ...	99-02	Y (AR9)	1	10257906

cardiagn.com

							1Y14-023
36.	7-N19	11.561	ADJUSTER, D/SEAT (W/MEMORY)	97-02	Y07-67	1	12455481
37.	7-N19	11.561	BRACKET, D/SEAT ADJR FRT ...	98-02	Y	1	10410578
	7-N19	11.561	BRACKET, P/SEAT ADJR FRT ...	98-02	Y	1	10410578

RPO DEFINITIONS
AAB – MEMORY DRIVER CONVENIENCE PACKAGE
AG1 – ADJUSTER,SEAT,6-WAY POWER,DRIVER(60-40)(VAR 2)
AG2 – ADJUSTER,SEAT,6-WAY POWER,SPLIT BENCH,PASSENGER
AQ9 – SEAT,FRONT BUCKET,DRIVER,PASSENGER,RECLINING
AR9 – SEAT,FRONT BUCKET,DRIVER,PASSENGER,MANUAL RECLINING(EUROPEAN STYLE)
N37 – STEERING COLUMN,TILT AND TELESCOPING
UZ6 – SPEAKER SYSTEM 6, QUAD FRT DR MTD, DUAL QTR MTD
U1S – PLAYER MULTIPLE COMPACT DISC
19I – INTERIOR TRIM,BLACK
193 – TRIM COMBINATION,BLACK LEATHER
194 – TRIM COMBINATION,BLACK LEATHER
67I – INTERIOR TRIM,CAMEL
673 – TRIM COMBINATION– LEATHER, OAK
70I – INTERIOR TRIM,TORCH RED
703 – TRIM COMBINATION,LEATHER,TORCH RED
704 – TRIM COMBINATION LEATHER, TORCH RED, (4) (96)
92I – INTERIOR TRIM SHALE/PEWTER
923 – TRIM COMBINATION LEATHER, SHALE/PEWTER
94I – INTERIOR TRIM FIRETHORN RED (97)
943 -- TRIM COMBINATION,LEATHER,LT QUARTZ

cardiagn.com

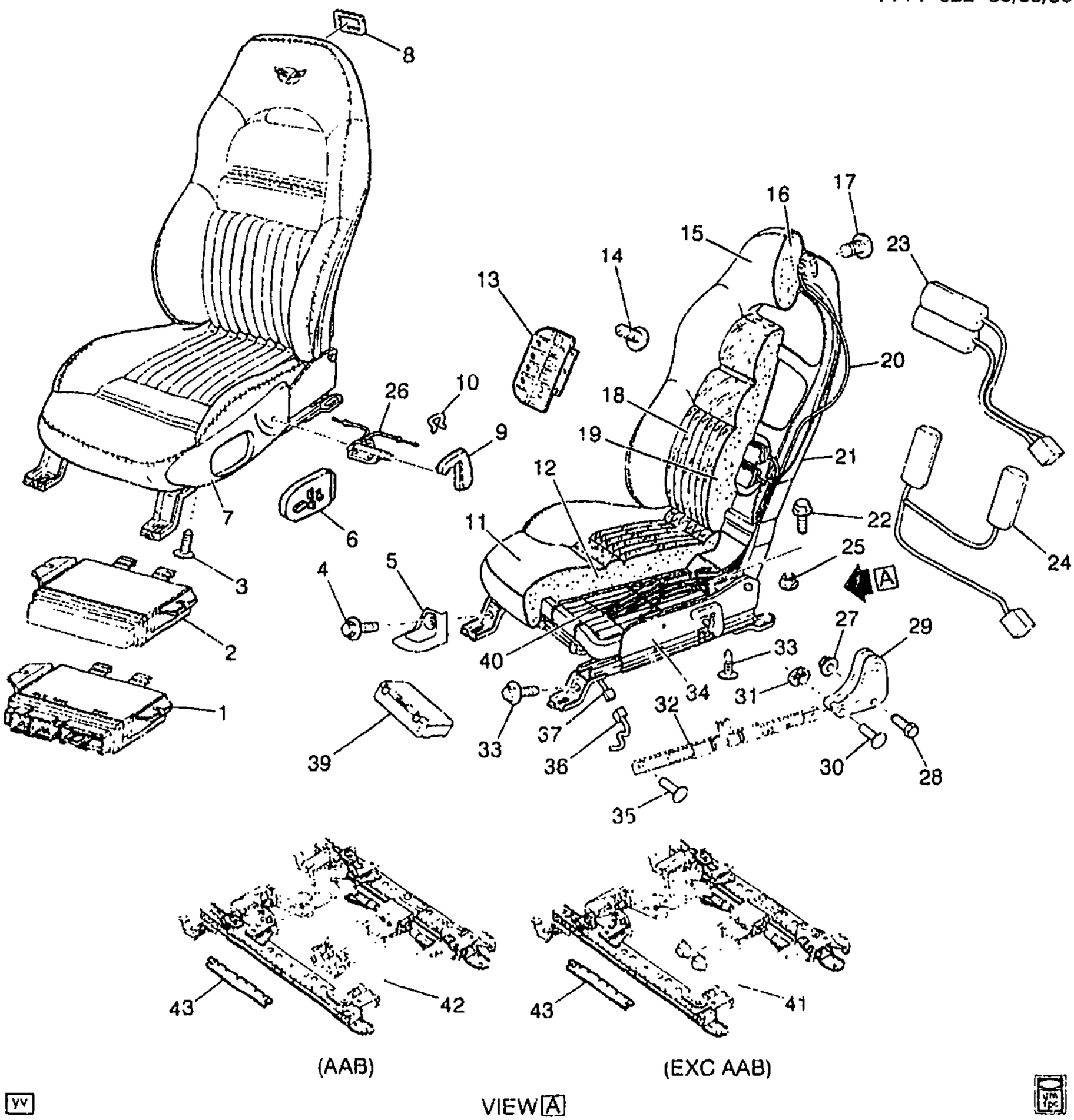

1Y14--0221

1998 Y SEAT ASM/FRONT (1ST DESIGN SEATS USE "2-BLADDER BOLSTER" SYSTEM(AQ9)(1ST DES)

1.	7-N18	11.558	MODULE, D/SEAT CONT	98	Y07-67 (AQ9)	1	9360841
	7-N7	10.485	CONNECTOR, MDL-FRT S/D CONT (GREEN) (6-WAY F) (16.263)	98	Y	2	12089527
	7-N7	10.485	CONNECTOR, MDL-FRT S/D CONT (26-WAY F) (W/O LEADS)	98	Y	4	12160773

cardiagn.com

	7–N7	10.485	CONNECTOR, MDL–FRT S/D CONT (6–WAY F W/LEADS) (13.090) (AC–DELCO #PT1032)	98	Y	2	15305888
2.	7–N18	11.556	RELAY, ST ADJR	98	Y	1	10406008
3.		8.977	SCREW, M4.2–1X16 OV HD C/R STY 1 CB (D/ST CUSH OTR FIN)	98		2	11501112
		8.977	SCREW, M4.2–1X16 OV HD C/R STY 1 CB (P/ST CUSH OTR FIN)	98		2	11501112
4.	7–N20	11.573	RETAINER, D/SEAT INR ADJR FRT FIN CVR (PUSH IN) (1.272)	98	Y	1	10134407
	7–N20	11.573	RETAINER, P/SEAT INR ADJR FRT FIN CVR (PUSH IN) (1.272)	98	Y	1	10134407
5.	7–N20	11.573	COVER, D/SEAT ADJR FIN	98	Y	2	10246916
	7–N20	11.573	COVER, P/SEAT ADJR FIN	98	Y	2	10246916
6.	7–N18	11.558	SWITCH, D/SEAT ADJR (W/LUMBAR SWITCH)	98	Y (AQ9)	1	12135158
	7–N18	11.558	SWITCH, P/SEAT ADJR (W/LUMBAR SWITCH)	98	Y (AQ9)	1	12135158
7.	7–N12	11.362	PANEL, D/SEAT CUSH OTR FIN (3 ATTACHING HOLES)	98	Y	1	12455426
	7–N12	11.362	PANEL, P/SEAT CUSH OTR FIN	98	Y07–67	1	12455427
8.	7–N16	11.390	BEZEL, D/SEAT BK CUSH LAT REL HDL (RED)	98	Y (AQ9, 943)	1	10288901
	7–N16	11.390	BEZEL, D/SEAT BK CUSH LAT REL HDL (PEWTER)	98	Y (AQ9, 923)	1	10288902
	7–N16	11.390	BEZEL, D/SEAT BK CUSH LAT REL HDL (BLACK)	98	Y07–67 (AQ9, 193)	1	10288900
	7–N16	11.390	BEZEL, D/SEAT BK CUSH LAT REL HDL (CAMEL)	98	Y07–67 (AQ9, 673)	1	10288903
	7–N16	11.390	BEZEL, P/SEAT BK CUSH LAT REL HDL (RED)	98	Y (AQ9, 943)	1	10288901
	7–N16	11.390	BEZEL, P/SEAT BK CUSH LAT REL HDL (PEWTER)	98	Y (AQ9, 923)	1	10288902
	7–N16	11.390	BEZEL, P/SEAT BK CUSH LAT REL HDL (BLACK)	98	Y07–67 (AQ9, 193)	1	10288900
	7–N16	11.390	BEZEL, P/SEAT BK CUSH LAT REL HDL (CAMEL)	98	Y07–67 (AQ9, 673)	1	10288903
9.	7–N14	11.377	HANDLE, D/SEAT RECL (EBONY)	98	Y	1	10272551
	7–N14	11.377	HANDLE, P/SEAT RECL	98	Y	1	10272552
10.		N.S.	SPRING, D/SEAT RECL HDL	98			
		N.S.	SPRING, P/SEAT RECL HDL	98			
11.	7–B5	14.880	COVER, D/SEAT CUSH (BLACK) (14.800)	98	Y (AQ9, 193)	1	12455447
	7–B5	14.880	COVER, D/SEAT CUSH (RED) (14.800)	98	Y (AQ9, 943)	1	12455448
	7–B5	14.880	COVER, D/SEAT CUSH (PEWTER)	98	Y (AQ9, 923)	1	12455449
	7–B5	14.880	COVER, D/SEAT CUSH (CAMEL) (14.800)	98	Y (AQ9, 673)	1	12455450
	7–B5	14.880	COVER, D/SEAT CUSH (YELLOW FRONT W/BLACK BACK)	98	Y67 (AQ9, Z4Z, 194)	1	10413523
	7–B5	14.880	COVER, P/SEAT CUSH (BLACK) (14.800)	98	Y (AG2, AQ9, 193)	1	12455447
	7–B5	14.880	COVER, P/SEAT CUSH (RED) (14.800)	98	Y (AG2, AQ9, 943)	1	12455448
	7–B5	14.880	COVER, P/SEAT CUSH (PEWTER)	98	Y (AG2, AQ9, 923)	1	12455449

cardiagn.com

						1114-0221	
	7-B5	14.880	COVER, P/SEAT CUSH (CAMEL) (14.800)	98	Y (AG2, AQ9, 673)	1	12455450
	7-B5	14.880	COVER, P/SEAT CUSH (YELLOW FRONT W/BLACK BACK)	98	Y67 (AQ9, Z4Z, 194)	1	10413523
12.	7-B6	14.890	PAD, D/SEAT CUSH	98	Y (AQ9)	1	10273420
	7-B6	14.890	PAD, P/SEAT CUSH	98	Y (AQ9)	1	10273420
13.	7-N16	11.379	BRACKET, D/SEAT BK CUSH SI BOLS ADJ (INR)	98	Y07-67 (AQ9)	RH	10285826
	7-N16	11.379	BRACKET, D/SEAT BK CUSH SI BOLS ADJ (OTR)	98	Y07-67 (AQ9)	LH	10285825
	7-N16	11.379	BRACKET, P/SEAT BK CUSH SI BOLS ADJ (INR)	98	Y07-67 (AG2, AQ9)	LH	10285825
	7-N16	11.379	BRACKET, P/SEAT BK CUSH SI BOLS ADJ (OTR)	98	Y07-67 (AG2, AQ9)	RH	10285826
14.	7-A12	14.804	RETAINER, D/SEAT BK CUSH SI INR FAC (FASTNER-PUSH-IN FITS HOLE 6.35, OD-25.4, LEN-18, SGL HEAD) (15.222)	98	Y07 (AQ9)	6	16674629
	7-A12	14.804	RETAINER, P/SEAT BK CUSH SI INR FAC (FASTNER-PUSH-IN FITS HOLE 6.35, OD-25.4, LEN-18, SGL HEAD) (15.222)	98	Y07 (AQ9)	6	16674629
15.	7-A9	14.800	COVER, D/SEAT BK CUSH (BLACK)	98	Y07-67 (AQ9, 193)	1	12455521
	7-A9	14.800	COVER, D/SEAT BK CUSH (RED)	98	Y07-67 (AQ9, 943)	1	12455522
	7-A9	14.800	COVER, D/SEAT BK CUSH (PEWTER)	98	Y07-67 (AQ9, 923)	1	12455523
	7-A9	14.800	COVER, D/SEAT BK CUSH (OAK)	98	Y07-67 (AQ9, 673)	1	12455524
	7-A9	14.800	COVER, D/SEAT BK CUSH (YELLOW FRONT W/BLACK BACK)	98	Y67 (AQ9, Z4Z, 194)	1	10413521
	7-A9	14.800	COVER, P/SEAT BK CUSH (BLACK)	98	Y07 (AG2, AQ9, 193)	1	12455527
	7-A9	14.800	COVER, P/SEAT BK CUSH (RED)	98	Y07 (AG2, AQ9, 943)	1	12455528
	7-A9	14.800	COVER, P/SEAT BK CUSH (PEWTER)	98	Y07 (AG2, AQ9, 923)	1	12455529
	7-A9	14.800	COVER, P/SEAT BK CUSH (OAK)	98	Y07 (AG2, AQ9, 673)	1	12455530
	7-A9	14.800	COVER, P/SEAT BK CUSH (YELLOW FRONT W/BLACK BACK)	98	Y67 (AQ9, Z4Z, 194)	1	10413524
	7-A9	14.800	COVER, P/SEAT BK CUSH (BLACK)	98	Y67 (AG2, AQ9, 193)	1	12455527
	7-A9	14.800	COVER, P/SEAT BK CUSH (RED)	98	Y67 (AG2, AQ9, 943)	1	12455528
	7-A9	14.800	COVER, P/SEAT BK CUSH (PEWTER)	98	Y67 (AG2, AQ9, 923)	1	12455529
	7-A9	14.800	COVER, P/SEAT BK CUSH (OAK)	98	Y67 (AG2, AQ9, 673)	1	12455530
16.	7-A11	14.802	PAD, D/SEAT BK CUSH (W/WIRE)	98	Y (AQ9, IL3)	1	10273418
	7-A11	14.802	PAD, P/SEAT BK CUSH	98	Y (AG2, AQ9, IL3)	1	10273418
17.	7-N12	11.368	RETAINER, D/SEAT BK CUSH FRM SUPT (12.800)	98	Y	2	20511451
	7-B6	14.890	RETAINER, P/SEAT BK CUSH PAD (12.800)	98	Y	2	20511451
18.	7-A9	14.800	COVER, D/SEAT BK CUSH INS (RED)	98	Y (AQ9, 943)	1	12455442
	7-A9	14.800	COVER, D/SEAT BK CUSH INS (PEWTER)	98	Y (AQ9, 923)	1	12455443

cardiagn.com

	7–A9	14.800	COVER, D/SEAT BK CUSH INS (BLACK)	98	Y07–67 (AQ9, 193)	1	12455441
	7–A9	14.800	COVER, D/SEAT BK CUSH INS (OAK)	98	Y07–67 (AQ9, 673)	1	12455444
	7–A9	14.800	COVER, D/SEAT BK CUSH INS (YELLOW)	98	Y67 (AQ9, Z4Z, 194)	1	10413522
	7–A12	14.804	COVER, P/SEAT BK CUSH INS (BLACK) (14.800)	98	Y07 (AG2, AQ9, 193)	1	12455441
	7–A12	14.804	COVER, P/SEAT BK CUSH INS (RED) (14.800)	98	Y (AG2, AQ9, 943)	1	12455442
	7–A12	14.804	COVER, P/SEAT BK CUSH INS (PEWTER) (14.800)	98	Y (AG2, AQ9, 923)	1	12455443
	7–A12	14.804	COVER, P/SEAT BK CUSH INS (OAK) (14.800)	98	Y (AG2, AQ9, 673)	1	12455444
	7–A12	14.804	COVER, P/SEAT BK CUSH INS (YELLOW) (14.800)	98	Y67 (AQ9, Z4Z, 194)	1	10413522
19.	7–A11	14.802	PAD, D/SEAT BK INS CVR	98	Y (AQ9, IL3)	1	10283891
	7–A11	14.802	PAD, P/SEAT BK INS CVR	98	Y (AG2, AQ9, IL3)	1	10283891
20.	7–N16	11.390	CABLE, D/SEAT BK CUSH LAT REL (BLACK)	98	Y07 (AQ9, 19I)	1	10288904
	7–N16	11.390	CABLE, D/SEAT BK CUSH LAT REL (RED)	98	Y07 (AQ9, 943)	1	10288905
	7–N16	11.390	CABLE, D/SEAT BK CUSH LAT REL (PEWTER)	98	Y07 (AQ9, 92I)	1	10288906
	7–N16	11.390	CABLE, D/SEAT BK CUSH LAT REL (OAK)	98	Y07 (AQ9, AR9, 67I)	1	10288907
	7–N16	11.390	CABLE, D/SEAT BK CUSH LAT REL (BLACK) (W/LEVER) (W/2 PIGTAILS)	98	Y67	1	10409022
	7–N16	11.390	CABLE, P/SEAT BK CUSH LAT REL (BLACK)	98	Y07 (AR9, AQ9, 19I)	1	10288904
	7–N16	11.390	CABLE, P/SEAT BK CUSH LAT REL (RED)	98	Y07 (AQ9, 943)	1	10288905
	7–N16	11.390	CABLE, P/SEAT BK CUSH LAT REL (PEWTER)	98	Y07 (AQ9, 92I)	1	10288906
	7–N16	11.390	CABLE, P/SEAT BK CUSH LAT REL (PEWTER)	98	Y07 (AR9, AQ9, 92I)	1	10288906
	7–N16	11.390	CABLE, P/SEAT BK CUSH LAT REL (OAK)	98	Y07 (AR9, AQ9, 67I)	1	10288907
	7–N16	11.390	CABLE, P/SEAT BK CUSH LAT REL (W/1 PIGTAIL)	98	Y07–67 (AR9, AQ9)	2	12455538
	7–N16	11.390	CABLE, P/SEAT BK CUSH LAT REL (BLACK) (W/LEVER) (W/2 PIGTAILS)	98	Y67	1	10409022
21.	7–N12	11.373	FRAME, D/SEAT BK CUSH	98	Y07 (AAB, AQ9)	1	12455536
	7–N12	11.373	FRAME, D/SEAT BK CUSH	98	Y67 (AG2, AQ9, IL3)	1	12455536
	7–N12	11.373	FRAME, D/SEAT BK CUSH (USE W/TRIM CODES ENDING IN 3, 4)	98	Y (AQ9, IL3)	1	12455474
	7–N12	11.373	FRAME, P/SEAT BK CUSH (2 BLADDER SYSTEM MUST MODIFY–REVISE WINGS AND ADD 6 RIVET HOLES, PER GUIDE MARKS ON FRAME AS REQD. 1 BOLSTER SYSTEM 6 HOLES NOT REQD.)	98	Y (AQ9, AG2, IL3)	1	12455474
	7–N12	11.373	FRAME, P/SEAT BK CUSH	98	Y07 (AAB, AG2, AQ9, IL3)	1	12455536
	7–N12	11.373	FRAME, P/SEAT BK CUSH	98	Y67 (AG2, AQ9, IL3)	1	12455536

cardiagn.com

22.		8.900	BOLT, HEX, M8X1.25X16, 15 THD, 18 OD, 10.9, MAT, 7114M, FIN, MACH (D/ST)	98		4	11515755
		8.900	BOLT, HEX, M8X1.25X16, 15 THD, 18 OD, 10.9, MAT, 7114M, FIN, MACH (P/ST)	98		4	11515755
23.	7–N15	11.378	BLADDER, D/SEAT LUMBAR SUPT (USED W/2–BLADDER BOLSTER SEAT SYSTEM) (FOR 2ND DES SEE 12455475)	98	Y (AQ9) (1ST DES)	1	12455492
	7–N15	11.378	BLADDER, P/SEAT LUMBAR SUPT	98	Y (AQ9)	1	12455492
	7–N15	11.378	BLADDER, P/SEAT LUMBAR SUPT (USED W/2–BLADDER BOLSTER SEAT SYSTEM) (FOR 2ND DES SEE 12455475)	98	Y (AQ9) (1ST DES)	1	12455492
24.	7–N15	11.378	BLADDER, D/SEAT LATERAL SUPT	98	Y (AQ9)	2	12455492
	7–N15	11.378	BLADDER, P/SEAT LATERAL SUPT	98	Y (AQ9) (1ST DES)	2	12455492
25.		8.915	NUT, HFH, 10X1.5 6H THD, 21.3 OD, 9.8 THK 13 HEX DR, GRD 9, ZF (D/ST ADJR) (8.917)	98		4	10255857
		8.915	NUT, HFH, 10X1.5 6H THD, 21.3 OD, 9.8 THK 13 HEX DR, GRD 9, ZF (P/ST ADJR) (8.917)	98		4	10255857
26.	7–N14	11.377	CABLE, P/SEAT RECL ACTR	98	Y	1	10278653
	7–N14	11.377	CABLE, D/SEAT RECL ACTR	98	Y	1	10278650
27.		8.917	NUT, HFH, M8X1.25, 17.9 OD, 738 THK, 13MM HEX, 10, ZF (ST BK CUSH PIV) (8.915) (AC–DELCO #11514596)	98		2	11514596
28.	7–N12	11.373	BOLT, D/SEAT BK CUSH FRM	98	Y	1	10277966
	7–N12	11.373	BOLT, P/SEAT BK CUSH FRM	98	Y	1	10277966
29.	7–N14	11.375	BRACKET, P/SEAT BK CUSH PIV	98	Y	2	10272746
	7–N14	11.375	BRACKET, D/SEAT BK CUSH PIV	98	Y	2	10272746
30.	7–N14	11.377	PIN, D/SEAT RECL (RR) (REAR)	98	Y	2	10277965
	7–N14	11.377	PIN, P/SEAT RECL (RR) (REAR)	98	Y	2	10277965
31.		8.934	RING–TYPE 3CM1 EXT TAP RD (6.700X15.80X.96, Z) (P/ST RECL PIN)	98		4	11515572
		8.934	RING–TYPE 3CM1 EXT TAP RD (6.700X15.80X.96, Z) (D/ST RECL PIN)	98		4	11515572
32.	7–N14	11.377	RECLINER, D/SEAT (INR)	98	Y	1	10272506
	7–N14	11.377	RECLINER, D/SEAT (OTR)	98	Y	1	10277957
	7–N14	11.377	RECLINER, P/SEAT (INR)	98	Y	1	10272506
	7–N14	11.377	RECLINER, P/SEAT (OTR)	98	Y	1	10277957
33.		8.906	SCREW, RD WA H, M4.2X1.41X20.8, 19.4 THD, 11.35 OD, GM6010M (P/SEAT RECL ACTR CBL) (8.977)	98		3	11516630
		8.906	SCREW, RD WA H, M4.2X1.41X20.8, 19.4 THD, 11.35 OD, GM6010M (D/SEAT RECL ACTR CBL) (8.977)	98		3	11516630

cardiagn.com

34.	7-N18	11.419	FRAME, D/SEAT CUSH (3 ATTACHING HOLES FOR CUSHION PANEL)	98	Y	1	12455425
	7-N18	11.419	FRAME, P/SEAT CUSH (3 ATTACHING HOLES FOR CUSHION PANEL)	98	Y	1	12455425
	7-N18	11.419	FRAME, P/SEAT CUSH (3 ATTACHING HOLES FOR CUSHION PANEL)	98	Y (AQ9)	1	12455425
35.	7-N14	11.377	PIN, D/SEAT RECL (FRT) (WIRE SPIRAL PIN)	98	Y	2	10403494
	7-N14	11.377	PIN, P/SEAT RECL (FRT) (WIRE SPIRAL PIN)	98	Y	2	10403494
36.	7-N26	13.090	HARNESS, BODY FRT WRG	98	Y07	1	12189550
	7-N26	13.090	HARNESS, BODY FRT WRG	98	Y67 (UZ6)	1	12189958
37.	7-A13	14.865	HARNESS, INFLR AIR WRG	98	Y (AQ9, IL3) (EXC AAB)	1	10401715
	7-A13	14.865	HARNESS, INFLR AIR WRG (W/2 BLADDER BOLSTER SYSTEM SEAT, FOR 2ND DES SEE 12455476)	98	Y (AAB, AQ9, IL3) (1ST DES)	1	10410689
	7-A13	14.865	HARNESS, INFLR AIR WRG (USED W/2 BLADDER BOLSTER SYSTEM SEAT) (FOR 2ND DES SEE 12455477)	98	Y (AG2, AQ9, IL3) (1ST DES)	1	10410690
38.	7-N20	11.573	RETAINER, D/SEAT OTR ADJR FRT FIN CVR (PUSH IN) (1.272) ..	98	Y	1	10134407
	7-N20	11.573	RETAINER, P/SEAT OTR ADJR FRT FIN CVR (PUSH IN) (1.272) ..	98	Y	1	10134407
39.	7-N15	11.378	PUMP, D/SEAT & P/SEAT CUSH AIR (USED W/2-BLADDER BOLSTER SEAT SYSTEM) (FOR 2ND DES SEE 12455475)	98	Y (AQ9, IL3) (1ST DES)	1	10273427
	7-N15	11.378	PUMP, D/SEAT & P/SEAT CUSH AIR	98	Y07-67 (AQ9)	1	12455493
40.	7-N18	11.419	WIRE, D/SEAT CUSH PAD SUPT .	98	Y	1	10272689
	7-N18	11.419	WIRE, P/SEAT CUSH PAD SUPT .	98	Y	1	10272689
41.	7-N19	11.561	ADJUSTER, D/SEAT (W/O MEMORY)	98	Y	1	12455535
	7-N19	11.561	ADJUSTER, P/SEAT (W/PWR) ...	98	Y	1	12455534
42.	7-N19	11.561	ADJUSTER, D/SEAT (W/MEMORY)	98	Y	1	12455481
43.	7-N19	11.561	BRACKET, D/SEAT ADJR FRT ...	98	Y	1	10410578
	7-N19	11.561	BRACKET, P/SEAT ADJR FRT ...	98	Y	1	10410578

RPO DEFINITIONS

AAB - MEMORY DRIVER CONVENIENCE PACKAGE
AG2 - ADJUSTER,SEAT,6-WAY POWER,SPLIT BENCH,PASSENGER
AQ9 - SEAT,FRONT BUCKET,DRIVER,PASSENGER,RECLINING
AR9 - SEAT,FRONT BUCKET,DRIVER,PASSENGER,MANUAL RECLINING(EUROPEAN STYLE)
IL3 - TRIM,INTERIOR DESIGN
UZ6 - SPEAKER SYSTEM 6, QUAD FRT DR MTD, DUAL QTR MTD
Z4Z - MERCHANDISED PKG INDY PACE CAR
191 - INTERIOR TRIM BLACK
193 - TRIM COMBINATION,BLACK LEATHER
194 - TRIM COMBINATION,BLACK LEATHER
671 - INTERIOR TRIM,CAMEL
673 - TRIM COMBINATION - LEATHER, OAK
921 - INTERIOR TRIM SHALE/PEWTER
923 - TRIM COMBINATION LEATHER, SHALE/PEWTER

cardiagn.com

cardiagn.com

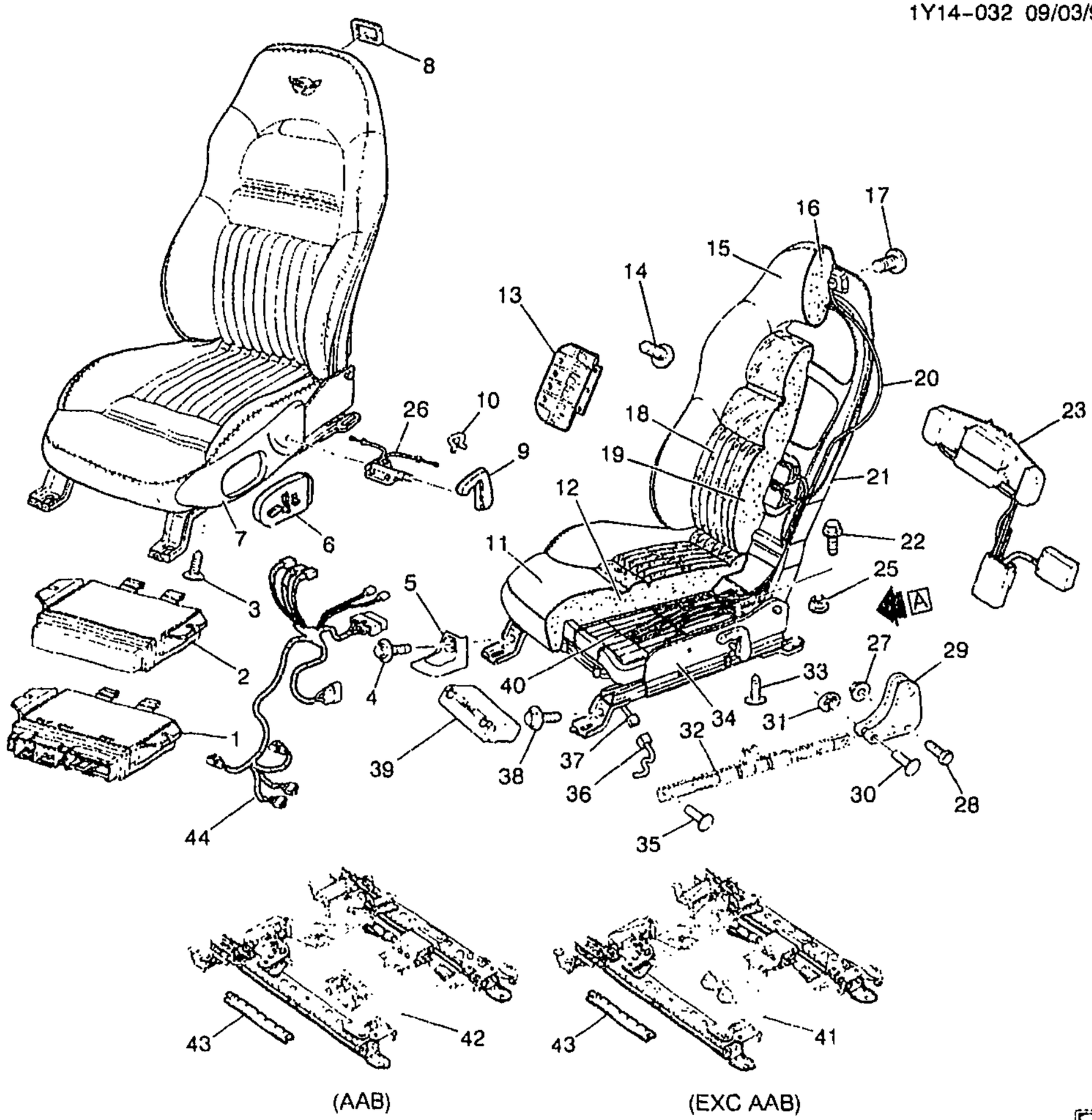

1Y14-032

1998 Y SEAT ASM/FRONT (2ND DESIGN SEATS USE "1-BLADDER BOLSTER" SYSTEM)(AQ9)(2ND DES)

1999-2002 Y SEAT ASM/FRONT (AQ9)

1.	7-N18	11.558	MODULE, D/SEAT CONT	98-99	Y07-67 (AAB, AR9) ...	1	9360841
	7-N18	11.558	MODULE, D/SEAT CONT	98-99	Y07-67 (AQ9)	1	9360841
	7-N18	11.558	MODULE, D/SEAT CONT	00-02	Y (AAB, AR9)	1	10435193
	7-N18	11.558	MODULE, D/SEAT CONT	00-02	Y07-67 (AQ9)	1	10435193
	7-N7	10.485	CONNECTOR, MDL-FRT S/D CONT (GREEN) (6-WAY F) (16.263)	98-02	Y	2	12089527

cardiagn.com

	7-N7	10.485	CONNECTOR, MDL-FRT S/D CONT (26-WAY F) (W/O LEADS)	98-02	Y	4	12160773
	7-N7	10.485	CONNECTOR, MDL-FRT S/D CONT (6-WAY F W/LEADS) (13.090) (AC-DELCO #PT1032)	98-02	Y	2	15305888
2.	7-N18	11.556	RELAY, ST ADJR	98-02	Y	1	10406008
3.		8.977	SCREW, M4.2-1X16 OV HD C/R STY 1 CB (D/ST CUSH OTR FIN)	98-02		2	11501112
		8.977	SCREW, M4.2-1X16 OV HD C/R STY 1 CB (P/ST CUSH OTR FIN)	98-02		2	11501112
4.	7-N20	11.573	RETAINER, D/SEAT INR ADJR FRT FIN CVR (PUSH IN) (1.272)	98-02	Y	1	10134407
	7-N20	11.573	RETAINER, P/SEAT INR ADJR FRT FIN CVR (PUSH IN) (1.272)	98-02	Y	1	10134407
5.	7-N20	11.573	COVER, D/SEAT ADJR FIN	98-02	Y	2	10246916
	7-N20	11.573	COVER, P/SEAT ADJR FIN	98-02	Y	2	10246916
6.	7-N18	11.558	SWITCH, D/SEAT ADJR (W/LUMBAR SWITCH)	98-01	Y (AQ9)	1	12135158
	7-N18	11.558	SWITCH, D/SEAT ADJR (W/LUMBAR SWITCH)	02	Y07-67 (AQ9)	1	12135158
7.	7-N12	11.362	PANEL, D/SEAT CUSH OTR FIN (3 ATTACHING HOLES)	98	Y	1	12455426
	7-N12	11.362	PANEL, D/SEAT CUSH OTR FIN (3 ATTACHING HOLES)	99-02	Y07-67	1	12455426
	7-N12	11.362	PANEL, P/SEAT CUSH OTR FIN	98-02	Y07-67	1	12455427
8.	7-N16	11.390	BEZEL, D/SEAT BK CUSH LAT REL HDL (RED)	98-99	Y (AQ9, 943)	1	10288901
	7-N16	11.390	BEZEL, D/SEAT BK CUSH LAT REL HDL (PEWTER)	98-02	Y (AQ9, 923)	1	10288902
	7-N16	11.390	BEZEL, D/SEAT BK CUSH LAT REL HDL (BLACK)	98-02	Y07-67 (AQ9, 193)	1	10288900
	7-N16	11.390	BEZEL, D/SEAT BK CUSH LAT REL HDL (CAMEL)	98-02	Y07-67 (AQ9, 673)	1	10288903
	7-N16	11.390	BEZEL, D/SEAT BK CUSH LAT REL HDL (RED)	00-02	Y07-67 (AQ9, 701)	1	10408563
	7-N16	11.390	BEZEL, P/SEAT BK CUSH LAT REL HDL (RED)	98-99	Y (AQ9, 943)	1	10288901
	7-N16	11.390	BEZEL, P/SEAT BK CUSH LAT REL HDL (PEWTER)	98-01	Y (AQ9, 923)	1	10288902
	7-N16	11.390	BEZEL, P/SEAT BK CUSH LAT REL HDL (BLACK)	98-02	Y07-67 (AQ9, 193)	1	10288900
	7-N16	11.390	BEZEL, P/SEAT BK CUSH LAT REL HDL (CAMEL)	98-02	Y07-67 (AQ9, 673)	1	10288903
	7-N16	11.390	BEZEL, P/SEAT BK CUSH LAT REL HDL (RED)	00-02	Y07-67 (AQ9, 703)	1	10408563
	7-N16	11.390	BEZEL, P/SEAT BK CUSH LAT REL HDL (PEWTER)	02	Y07-67 (AQ9, 923)	1	10288902
9.	7-N14	11.377	HANDLE, D/SEAT RECL (EBONY)	98-02	Y	1	10272551
	7-N14	11.377	HANDLE, P/SEAT RECL	98-02	Y	1	10272552
10.		N.S.	SPRING, D/SEAT RECL HDL	98-02			
		N.S.	SPRING, P/SEAT RECL HDL	98-02			
11.	7-B5	14.880	COVER, D/SEAT CUSH (BLACK) (14.800)	98	Y (AQ9, 193)	1	12455447
	7-B5	14.880	COVER, D/SEAT CUSH (RED) (14.800)	98	Y (AQ9, 943)	1	12455448
	7-B5	14.880	COVER, D/SEAT CUSH (PEWTER)	98	Y (AQ9, 923)	1	12455449

cardiagn.com

	7-B5	14.880	COVER, D/SEAT CUSH (CAMEL) (14.800)	98	Y (AQ9, 673)	1	12455450
	7-B5	14.880	COVER, D/SEAT CUSH (YELLOW FRONT W/BLACK BACK)	98	Y67 (AQ9, Z4Z, 194)	1	10413523
	7-B5	14.880	COVER, D/SEAT CUSH (BLACK) (14.800)	99-02	Y07-67 (AQ9, 193)	1	12455447
	7-B5	14.880	COVER, D/SEAT CUSH (RED) (14.800)	99	Y07-67 (AQ9, 943)	1	12455448
	7-B5	14.880	COVER, D/SEAT CUSH (PEWTER)	99-02	Y07-67 (AQ9, 923)	1	12455449
	7-B5	14.880	COVER, D/SEAT CUSH (CAMEL) (14.800)	99-02	Y07-67 (AQ9, 673)	1	12455450
	7-B5	14.880	COVER, D/SEAT CUSH (RED)	00-02	Y07-67 (AQ9, 703)	1	12455451
	7-B5	14.880	COVER, P/SEAT CUSH (BLACK) (14.800)	98	Y (AG2, AQ9, 193)	1	12455447
	7-B5	14.880	COVER, P/SEAT CUSH (RED) (14.800)	98	Y (AG2, AQ9, 943)	1	12455448
	7-B5	14.880	COVER, P/SEAT CUSH (PEWTER)	98	Y (AG2, AQ9, 923)	1	12455449
	7-B5	14.880	COVER, P/SEAT CUSH (CAMEL) (14.800)	98	Y (AG2, AQ9, 673)	1	12455450
	7-B5	14.880	COVER, P/SEAT CUSH (YELLOW FRONT W/BLACK BACK)	98	Y67 (AQ9, Z4Z, 194)	1	10413523
	7-B5	14.880	COVER, P/SEAT CUSH (BLACK) (14.800)	99-02	Y07-67 (AG2, AQ9, 193)	1	12455447
	7-B5	14.880	COVER, P/SEAT CUSH (RED) (14.800)	99	Y07-67 (AG2, AQ9, 943)	1	12455448
	7-B5	14.880	COVER, P/SEAT CUSH (PEWTER)	99-02	Y07-67 (AG2, AQ9, 923)	1	12455449
	7-B5	14.880	COVER, P/SEAT CUSH (CAMEL) (14.800)	99-02	Y07-67 (AG2, AQ9, 673)	1	12455450
	7-B5	14.880	COVER, P/SEAT CUSH (RED)	00-01	Y07-67 (AQ9, 703)	1	12455451
12.	7-B6	14.890	PAD, D/SEAT CUSH	98-01	Y (AQ9)	1	10273420
	7-B6	14.890	PAD, D/SEAT CUSH	02	Y07	1	10273420
	7-B6	14.800	PAD, P/SEAT CUSH	98-02	Y (AQ9)	1	10273420
13.	7-N16	11.379	BRACKET, D/SEAT BK CUSH SI BOLS ADJ (INR)	98-99	Y07-67 (AQ9)	RH	10285826
	7-N16	11.379	BRACKET, D/SEAT BK CUSH SI BOLS ADJ (OTR)	98-99	Y07-67 (AQ9)	LH	10285825
	7-N16	11.379	BRACKET, P/SEAT BK CUSH SI BOLS ADJ (INR)	98-99	Y07-67 (AG2, AQ9)	LH	10285825
	7-N16	11.379	BRACKET, P/SEAT BK CUSH SI BOLS ADJ (OTR)	98-99	Y07-67 (AG2, AQ9)	RH	10285826
		N.S.	BRACKET, P/SEAT BK CUSH SI BOLS ADJ (PART OF 23)	00-02			
14.	7-A12	14.804	RETAINER, D/SEAT BK CUSH SI INR FAC (FASTNER-PUSH-IN FITS HOLE 6.35, OD-25.4, LEN-18, SGL HEAD) (15.222)	98-02	Y07 (AQ9)	6	16674629
	7-A12	14.804	RETAINER, P/SEAT BK CUSH SI INR FAC (FASTNER-PUSH-IN FITS HOLE 6.35, OD-25.4, LEN-18, SGL HEAD) (15.222)	98-01	Y07 (AQ9)	6	16674629
	7-A12	14.804	RETAINER, P/SEAT BK CUSH SI INR FAC (FASTNER-PUSH-IN FITS HOLE 6.35, OD-25.4, LEN-18, SGL HEAD) (15.222)	01-02	Y07 (AG2, AQ9, IL3)	6	16674629

cardiagn.com

15.	7–A9	14.800	COVER, D/SEAT BK CUSH (BLACK)	98–02	Y07–67 (AQ9, 193)	1	12455521
	7–A9	14.800	COVER, D/SEAT BK CUSH (RED)	98–99	Y07–67 (AQ9, 943)	1	12455522
	7–A9	14.800	COVER, D/SEAT BK CUSH (PEWTER)	98–02	Y07–67 (AQ9, 923)	1	12455523
	7–A9	14.800	COVER, D/SEAT BK CUSH (OAK)	98–02	Y07–67 (AQ9, 673)	1	12455524
	7–A9	14.800	COVER, D/SEAT BK CUSH (YELLOW FRONT W/BLACK BACK)	98	Y67 (AQ9, Z4Z, 194)	1	10413521
	7–A9	14.800	COVER, D/SEAT BK CUSH (RED)	00	Y (AQ9, 703)	1	12455525
	7–A9	14.800	COVER, D/SEAT BK CUSH (RED)	01–02	Y07–67 (AQ9, 703)	1	12455525
	7–A9	14.800	COVER, P/SEAT BK CUSH (BLACK)	98–02	Y07 (AG2, AQ9, 193)	1	12455527
	7–A9	14.800	COVER, P/SEAT BK CUSH (RED)	98–99	Y07 (AG2, AQ9, 943)	1	12455528
	7–A9	14.800	COVER, P/SEAT BK CUSH (PEWTER)	98–02	Y07 (AG2, AQ9, 923)	1	12455529
	7–A9	14.800	COVER, P/SEAT BK CUSH (OAK)	98–02	Y07 (AG2, AQ9, 673)	1	12455530
	7–A9	14.800	COVER, P/SEAT BK CUSH (YELLOW FRONT W/BLACK BACK)	98	Y67 (AQ9, Z4Z, 194)	1	10413524
	7–A9	14.800	COVER, P/SEAT BK CUSH (BLACK)	98–02	Y67 (AG2, AQ9, 193)	1	12455527
	7–A9	14.800	COVER, P/SEAT BK CUSH (RED)	98–99	Y67 (AG2, AQ9, 943)	1	12455528
	7–A9	14.800	COVER, P/SEAT BK CUSH (PEWTER)	98–02	Y67 (AG2, AQ9, 923)	1	12455529
	7–A9	14.800	COVER, P/SEAT BK CUSH (OAK)	98–02	Y67 (AG2, AQ9, 673)	1	12455530
	7–A9	14.800	COVER, P/SEAT BK CUSH (RED)	00–02	Y07–67 (AG2, AQ9, 703)	1	12455531
16.	7–A11	14.802	PAD, D/SEAT BK CUSH (W/WIRE)	98	Y (AQ9, IL3)	1	10273418
	7–A11	14.802	PAD, D/SEAT BK CUSH (W/WIRE)	99–02	Y07–67 (AQ9, IL3)	1	10273418
	7–A11	14.802	PAD, P/SEAT BK CUSH	98	Y (AG2, AQ9, IL3)	1	10273418
	7–A11	14.802	PAD, P/SEAT BK CUSH	99–02	Y07–67 (AG2, AQ9, IL3)	1	10273418
17.	7–N12	11.368	RETAINER, D/SEAT BK CUSH FRM SUPT (12.800)	98–02	Y	2	20511451
	7–B6	14.890	RETAINER, P/SEAT BK CUSH PAD (12.800)	98–02	Y	2	20511451
18.	7–A9	14.800	COVER, D/SEAT BK CUSH INS (RED)	98	Y (AQ9, 943)	1	12455442
	7–A9	14.800	COVER, D/SEAT BK CUSH INS (PEWTER)	98	Y (AQ9, 923)	1	12455443
	7–A9	14.800	COVER, D/SEAT BK CUSH INS (BLACK)	98–02	Y07–67 (AQ9, 193)	1	12455441
	7–A9	14.800	COVER, D/SEAT BK CUSH INS (OAK)	98–99	Y07–67 (AQ9, 673)	1	12455444
	7–A9	14.300	COVER, D/SEAT BK CUSH INS (YELLOW)	98	Y67 (AQ9, Z4Z, 194)	1	10413522
	7–A9	14.800	COVER, D/SEAT BK CUSH INS (RED)	99	Y07–67 (AQ9, 943)	1	12455442
	7–A9	14.800	COVER, D/SEAT BK CUSH INS (PEWTER)	99	Y07–67 (AQ9, 923)	1	12455443
	7–A9	14.800	COVER, D/SEAT BK CUSH INS (RED)	00–02	Y07–67 (AQ9, 703)	1	12455445
	7–A9	14.800	COVER, D/SEAT BK CUSH INS (PEWTER)	00–02	YY07–67 (AAB, AQ9, N37, 923)	1	12455443

cardiagn.com

	7–A9	14.800	COVER, D/SEAT BK CUSH INS (OAK)	00–02	YY07–67 (AAB, AQ9, N37, 673)	1	12455444
	7–A12	14.804	COVER, P/SEAT BK CUSH INS (BLACK) (14.800)	98–02	Y07 (AG2, AQ9, 193)	1	12455441
	7–A12	14.804	COVER, P/SEAT BK CUSH INS (RED) (14.800)	98	Y (AG2, AQ9, 943)	1	12455442
	7–A12	14.804	COVER, P/SEAT BK CUSH INS (PEWTER) (14.800)	98	Y (AG2, AQ9, 923)	1	12455443
	7–A12	14.804	COVER, P/SEAT BK CUSH INS (OAK) (14.800)	98	Y (AG2, AQ9, 673)	1	12455444
	7–A12	14.804	COVER, P/SEAT BK CUSH INS (YELLOW) (14.800)	98	Y67 (AQ9, Z4Z, 194)	1	10413522
	7–A12	14.804	COVER, P/SEAT BK CUSH INS (RED) (14.800)	99	Y07–67 (AG2, AQ9, 943)	1	12455442
	7–A12	14.804	COVER, P/SEAT BK CUSH INS (PEWTER) (14.800)	99	Y07–67 (AG2, AQ9, 923)	1	12455443
	7–A12	14.804	COVER, P/SEAT BK CUSH INS (OAK) (14.800)	99	Y07–67 (AG2, AQ9, 673)	1	12455444
	7–A12	14.804	COVER, P/SEAT BK CUSH INS (RED) (14.800)	00–02	Y07–67 (AG2, AQ9, 703)	1	12455445
19.	7–A11	14.802	PAD, D/SEAT BK INS CVR	98	Y (AQ9, IL3)	1	10283891
	7–A11	14.802	PAD, D/SEAT BK INS CVR	99–02	Y07–67 (AQ9, IL3)	1	10283891
	7–A11	14.802	PAD, P/SEAT BK INS CVR	98	Y (AG2, AQ9, IL3)	1	10283891
	7–A11	14.802	PAD, P/SEAT BK INS CVR	99–02	Y07–67 (AG2, AQ9, IL3)	1	10283891
20.	7–N16	11.390	CABLE, D/SEAT BK CUSH LAT REL (BLACK)	98–02	Y07 (AQ9, 19I)	1	10288904
	7–N16	11.390	CABLE, D/SEAT BK CUSH LAT REL (RED)	98–99	Y07 (AQ9, 943)	1	10288905
	7–N16	11.390	CABLE, D/SEAT BK CUSH LAT REL (PEWTER)	98–02	Y07 (AQ9, 92I)	1	10288906
	7–N16	11.390	CABLE, D/SEAT BK CUSH LAT REL (OAK)	98–02	Y07 (AQ9, AR9, 67I)	1	10288907
	7–N16	11.390	CABLE, D/SEAT BK CUSH LAT REL (BLACK) (W/LEVER) (W/2 PIGTAILS)	98–02	Y67	1	10409022
	7–N16	11.390	CABLE, D/SEAT BK CUSH LAT REL (RED)	00–02	Y07 (AR9, AQ9, 70I)	1	10408562
	7–N16	11.390	CABLE, P/SEAT BK CUSH LAT REL (BLACK)	98–02	Y07 (AR9, AQ9, 19I)	1	10288904
	7–N16	11.390	CABLE, P/SEAT BK CUSH LAT REL (RED)	98–99	Y07 (AQ9, 943)	1	10288905
	7–N16	11.390	CABLE, P/SEAT BK CUSH LAT REL (PEWTER)	98–99	Y07 (AQ9, 92I)	1	10288906
	7–N16	11.390	CABLE, P/SEAT BK CUSH LAT REL (PEWTER)	98–02	Y07 (AR9, AQ9, 92I)	1	10288906
	7–N16	11.390	CABLE, P/SEAT BK CUSH LAT REL (OAK)	98–02	Y07 (AR9, AQ9, 67I)	1	10288907
	7–N16	11.390	CABLE, P/SEAT BK CUSH LAT REL (W/1 PIGTAIL)	98–02	Y07–67 (AR9, AQ9)	2	12455538
	7–N16	11.390	CABLE, P/SEAT BK CUSH LAT REL (BLACK) (W/LEVER) (W/2 PIGTAILS)	98–02	Y67	1	10409022
	7–N16	11.390	CABLE, P/SEAT BK CUSH LAT REL (RED)	00–02	Y07 (AQ9, 70I)	1	10408562
21.	7–N12	11.373	FRAME, D/SEAT BK CUSH	98–01	Y07 (AAB, AQ9)	1	12455536
	7–N12	11.373	FRAME, D/SEAT BK CUSH	98–00	Y67 (AAB, AR9)	1	12455536
	7–N12	11.373	FRAME, D/SEAT BK CUSH	98–00	Y67 (AG2, AQ9, IL3)	1	12455536

cardiagn.com

	7–N12	11.373	FRAME, D/SEAT BK CUSH	99	Y (AQ9, IL3)	1	12455474
	7–N12	11.373	FRAME, D/SEAT BK CUSH	00	Y (AQ9, IL3)	1	12455536
	7–N12	11.373	FRAME, D/SEAT BK CUSH	01	Y67 (AAB, AQ9)	1	12455536
	7–N12	11.373	FRAME, D/SEAT BK CUSH	02	Y07	1	12455536
	7–N12	11.373	FRAME, D/SEAT BK CUSH (USE W/TRIM CODES ENDING IN 3, 4)	98	Y (AQ9, IL3)	1	12455474
	7–N12	11.373	FRAME, P/SEAT BK CUSH (2 BLADDER SYSTEM MUST MODIFY–REVISE WINGS AND ADD 6 RIVET HOLES, PER GUIDE MARKS ON FRAME AS REQD. 1 BOLSTER SYSTEM 6 HOLES NOT REQD.)	98	Y (AQ9, AG2, IL3)	1	12455474
	7–N12	11.373	FRAME, P/SEAT BK CUSH	98	Y07 (AAB, AG2, AQ9, IL3)	1	12455536
	7–N12	11.373	FRAME, P/SEAT BK CUSH	98	Y67 (AAB, AR9)	1	12455536
	7–N12	11.373	FRAME, P/SEAT BK CUSH	98–01	Y67 (AG2, AQ9, IL3) ...	1	12455536
	7–N12	11.373	FRAME, P/SEAT BK CUSH	99	Y07–67 (AQ9, AG2, IL3)	1	12455474
	7–N12	11.373	FRAME, P/SEAT BK CUSH	99–02	Y07 (AG2, AQ9, IL3) ...	1	12455536
	7–N12	11.373	FRAME, P/SEAT BK CUSH	00	Y07–67 (AQ9, AG2, IL3)	1	12455536
22.		8.900	BOLT, HEX, M8X1.25X16, 15 THD, 18 OD, 10.9, MAT 7114M, FIN, MACH (D/ST)	98–02	.....	4	11515755
		8.900	BOLT, HEX, M8X1.25X16, 15 THD, 18 OD, 10.9, MAT, 7114M, FIN, MACH (P/ST)	98–02	.....	4	11515755
23.	7–N15	11.378	BLADDER, D/SEAT LUMBAR SUPT (INCLS 13)	99–02	Y07 (AQ9)	1	12455492
	7–N15	11.378	BLADDER, D/SEAT LUMBAR SUPT (INCLS 13)	99–02	Y67 (AQ9)	1	12455492
		N.S.	BLADDER, D/SEAT LUMBAR SUPT	98	.....		
	7–N15	11.378	BLADDER, P/SEAT LUMBAR SUPT (INCLS 13)	99–02	Y07–67 (AQ9)	1	12455492
		N.S.	BLADDER, P/SEAT LUMBAR SUPT		.....		
25.		8.915	NUT, HFH, 10X1.5 6H THD, 21.3 OD, 9.8 THK 13 HEX DR, GRD 9, ZF (D/ST ADJR) (8.917)	98–02	.....	4	10255857
		8.915	NUT, HFH, 10X1.5 6H THD, 21.3 OD, 9.8 THK 13 HEX DR, GRD 9, ZF (P/ST ADJR) (8.917)	98–02	.....	4	10255857
26.	7–N14	11.377	CABLE, P/SEAT RECL ACTR	98–02	Y	1	10278653
	7–N14	11.377	CABLE, D/SEAT RECL ACTR	98–02	Y	1	10278650
27.		8.917	NUT, HFH, M8X1.25, 17.9 OD, 738 THK, 13MM HEX, 10, ZF (ST BK CUSH PIV) (8.915) (AC–DELCO #11514596)	98–02	.....	2	11514596
28.	7–N12	11.373	BOLT, D/SEAT BK CUSH FRM ...	98–02	Y	1	10277966
	7–N12	11.373	BOLT, P/SEAT BK CUSH FRM ..	98–02	Y	1	10277966
29.	7–N14	11.375	BRACKET, P/SEAT BK CUSH PIV	98–02	Y	2	10272746
	7–N14	11.375	BRACKET, D/SEAT BK CUSH PIV	98–02	Y	2	10272746
30.	7–N14	11.377	PIN, D/SEAT RECL (RR) (REAR) .	98–02	Y	2	10277965
	7–N14	11.377	PIN, P/SEAT RECL (RR) (REAR) .	98–02	Y	2	10277965

cardiagn.com

31.		8.934	RING-TYPE 3CM1 EXT TAP RD (6.700X15.90X.96, Z) (P/ST RECL PIN)	98-02		4	11515572
		8.934	RING-TYPE 3CM1 EXT TAP RD (6.700X15.80X.96, Z) (D/ST RECL PIN)	98-02		4	11515572
32.	7-N14	11.377	RECLINER, D/SEAT (INR)	98-02	Y	1	10272506
	7-N14	11.377	RECLINER, D/SEAT (OTR)	98-02	Y	1	10277957
	7-N14	11.377	RECLINER, P/SEAT (INR)	98-02	Y	1	10272506
	7-N14	11.377	RECLINER, P/SEAT (OTR)	98-02	Y	1	10277957
33.		8.906	SCREW, RD WA H, M4.2X1.41X20.8, 19.4 THD, 11.35 OD, GM6010M (P/SEAT RECL ACTR CBL) (8.977)	98-02		3	11516630
		8.906	SCREW, RD WA H, M4.2X1.41X20.8, 19.4 THD, 11.35 OD, GM6010M (D/SEAT RECL ACTR CBL) (8.977)	98-02		3	11516630
34.	7-N18	11.419	FRAME, D/SEAT CUSH (3 ATTACHING HOLES FOR CUSHION PANEL)	98-02	Y	1	12455425
	7-N18	11.419	FRAME, P/SEAT CUSH (3 ATTACHING HOLES FOR CUSHION PANEL)	98-02	Y	1	12455425
	7-N18	11.419	FRAME, P/SEAT CUSH (3 ATTACHING HOLES FOR CUSHION PANEL)	98	Y (AQ9)	1	12455425
35.	7-N14	11.377	PIN, D/SEAT RECL (FRT) (WIRE SPIRAL PIN)	98-02	Y	2	10403494
	7-N14	11.377	PIN, P/SEAT RECL (FRT) (WIRE SPIRAL PIN)	98-02	Y	2	10403494
36.	7-N26	13.090	HARNESS, BODY FRT WRG	98	Y07	1	12189550
	7-N26	13.090	HARNESS, BODY FRT WRG	98	Y67 (UZ6)	1	12189958
	7-N26	13.090	HARNESS, BODY FRT WRG	99-00	Y07 (EXC U1S)	1	12189597
	7-N26	13.090	HARNESS, BODY FRT WRG	99-00	Y07 (U1S)	1	12189889
	7-N26	13.090	HARNESS, BODY FRT WRG	99-00	Y67 (EXC U1S)	1	12189599
	7-N26	13.090	HARNESS, BODY FRT WRG	99-00	Y67 (U1S)	1	12189962
	7-N26	13.090	HARNESS, BODY FRT WRG	01-02	YY07 (UZ6) (EXC U1S)	1	15329382
	7-N26	13.090	HARNESS, BODY FRT WRG	01-02	YY07 (UZ6, U1S)	1	15329383
	7-N26	13.090	HARNESS, BODY FRT WRG	01-02	YY37	1	15329378
	7-N26	13.090	HARNESS, BODY FRT WRG	01-02	YY67 (UZ6) (EXC U1S)	1	15329386
	7-N26	13.090	HARNESS, BODY FRT WRG	01-02	YY67 (UZ6, U1S)	1	15329387
37.	7-A13	14.865	HARNESS, INFLR AIR WRG	98	Y (AQ9, IL3) (EXC AAB)	1	10401715
	7-A13	14.865	HARNESS, INFLR AIR WRG (D/SEAT) (W/1 BLADDER BOLSTER SYSTEM SEAT, FOR 1ST DES SEE 10410689)	98	Y (AAB, AQ9, IL3) (2ND DES)	1	12455476
	7-A13	14.865	HARNESS, INFLR AIR WRG (P/SEAT) (USED W/1 BLADDER BOLSTER SYSTEM SEAT) (FOR 1ST DES SEE 10410690)	98	Y (AG2, AQ9, IL3) (2ND DES)	1	12455477
	7-A13	14.865	HARNESS, INFLR AIR WRG	99-00	Y07-67 (AQ9, IL3) (EXC AAB)	1	10401715
	7-A13	14.865	HARNESS, INFLR AIR WRG (D/SEAT)	99-02	Y (AAB, AQ9, IL3)	1	12455476
	7-A13	14.865	HARNESS, INFLR AIR WRG (P/SEAT)	99-02	Y (AG2, AQ9, IL3)	1	12455477

cardiagn.com

	7–A13	14.865	HARNESS, INFLR AIR WRG (D/SEAT)	01–02	YY37 (AAB, AQ9, IL3)	1	12455476
38.	7–N20	11.573	RETAINER, D/SEAT OTR ADJR FRT FIN CVR (PUSH IN) (1.272)	98–02	Y	1	10134407
	7–N20	11.573	RETAINER, P/SEAT OTR ADJR FRT FIN CVR (PUSH IN) (1.272)	98–02	Y	1	10134407
39.	7–N15	11.378	PUMP, D/SEAT & P/SEAT CUSH AIR	98–02	Y07–67 (AQ9)	1	12455493
	7–N15	11.378	PUMP, D/SEAT & P/SEAT CUSH AIR	00	Y67 (AQ9)	1	10273427
40.	7–N18	11.419	WIRE, D/SEAT CUSH PAD SUPT	98–02	Y	1	10272689
	7–N18	11.419	WIRE, P/SEAT CUSH PAD SUPT	98–02	Y	1	10272689
41.	7–N19	11.561	ADJUSTER, D/SEAT	98–00	Y07 (AQ9) (EXC AAB)	1	12455535
	7–N19	11.561	ADJUSTER, D/SEAT	98–00	Y67 (AQ9) (EXC AAB)	1	12455535
	7–N19	11.561	ADJUSTER, P/SEAT	98–00	Y07–67 (AG2, AQ9, AR9)	1	12455534
	7–N19	11.561	ADJUSTER, P/SEAT	01–02	Y07–67 (AQ9)	1	88898623
42.	7–N19	11.561	ADJUSTER, D/SEAT	98–00	Y07–67 (AAB)	1	12455481
	7–N19	11.561	ADJUSTER, D/SEAT	98–02	Y07–67 (AQ9, AAB)	1	88898621
	7–N19	11.561	ADJUSTER, D/SEAT	98–00	Y07–67 (AR9, AAB)	1	88898621
	7–N19	11.561	ADJUSTER, D/SEAT	01–02	Y37 (AR9, AAB)	1	88898621
	7–N19	11.561	ADJUSTER, P/SEAT	98–00	Y07–67 (AG2, AQ9, AR9)	1	12455534
	7–N19	11.561	ADJUSTER, P/SEAT	01–02	Y07–67 (AQ9)	1	88898623
43.	7–N19	11.561	BRACKET, D/SEAT ADJR FRT	98–02	Y	1	10410578
	7–N19	11.561	BRACKET, P/SEAT ADJR FRT	98–02	Y	1	10410578
44.	7–N15	11.378	HARNESS, D/SEAT AIR SPLY	99–02	Y07–67	1	12455470
	7–A13	14.865	HARNESS, INFLR AIR WRG	98	Y (AQ9, IL3) (EXC AAB)	1	10401715
	7–A13	14.865	HARNESS, INFLR AIR WRG (D/SEAT) (W/1 BLADDER BOLSTER SYSTEM SEAT, FOR 1ST DES SEE 10410689)	98	Y (AAB, AQ9, IL3) (2ND DES)	1	12455476
	7–A13	14.865	HARNESS, INFLR AIR WRG (P/SEAT) (USED W/1 BLADDER BOLSTER SYSTEM SEAT) (FOR 1ST DES SEE 10410690)	98	Y (AG2, AQ9, IL3) (2ND DES)	1	12455477

RPO DEFINITIONS
AAB – MEMORY DRIVER CONVENIENCE PACKAGE
AG2 – ADJUSTER,SEAT,6–WAY POWER,SPLIT BENCH,PASSENGER
AQ9 – SEAT,FRONT BUCKET,DRIVER,PASSENGER,RECLINING
AR9 – SEAT,FRONT BUCKET,DRIVER,PASSENGER,MANUAL RECLINING(EUROPEAN STYLE)
IL3 – TRIM,INTERIOR DESIGN
N37 – STEERING COLUMN,TILT AND TELESCOPING
UZ6 – SPEAKER SYSTEM 6, QUAD FRT DR MTD, DUAL QTR MTD
U1S – PLAYER MULTIPLE COMPACT DISC
Z4Z – MERCHANDISED PKG INDY PACE CAR
19I – INTERIOR TRIM,BLACK
193 – TRIM COMBINATION,BLACK LEATHER
194 – TRIM COMBINATION,BLACK LEATHER
67I – INTERIOR TRIM,CAMEL
673 – TRIM COMBINATION – LEATHER, OAK
70I – INTERIOR TRIM,TORCH RED
703 – TRIM COMBINATION,LEATHER,TORCH RED
92I – INTERIOR TRIM SHALE/PEWTER
923 – TRIM COMBINATION LEATHER, SHALE/PEWTER
943 – TRIM COMBINATION,LEATHER,LT QUARTZ

cardiagn.com

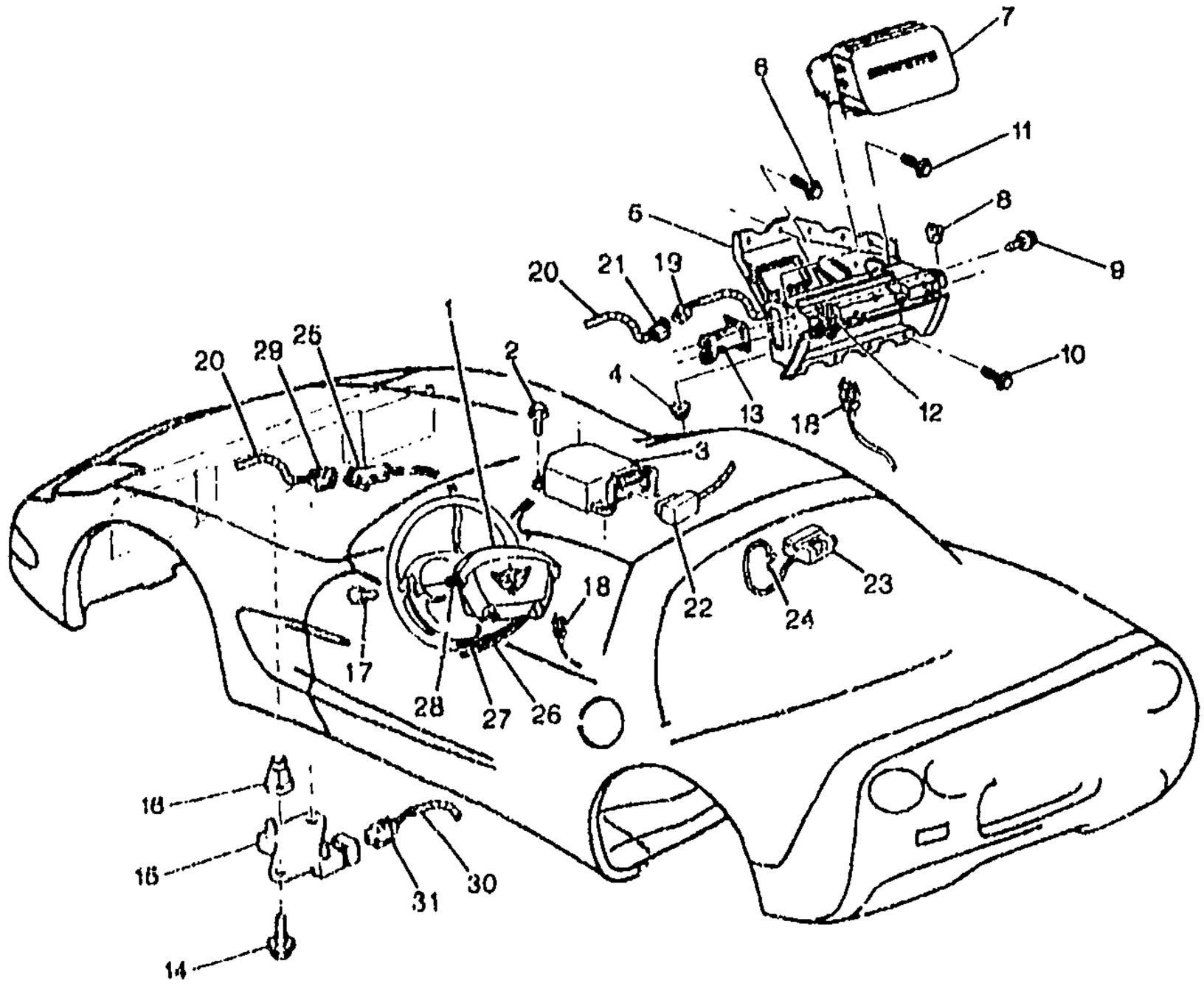

1Y14-020

1997-1998 Y INFLATABLE RESTRAINT SYSTEM (AK5)

1.	7-A13	14.865	MODULE, STRG WHL INFL RST	97	Y (AK5)	1	10407331
	7-N2	0.612	MODULE, STRG WHL INFL RST (14.865)	97	Y (AK5)	1	10407331
	7-A13	14.865	MODULE, STRG WHL INFL RST	98	Y (AK5)	1	10411124
	7-N2	0.612	MODULE, STRG WHL INFL RST (14.865)	98	Y (AK5)	1	10411124
2.		0.900	BOLT/SCREW, HEX W/FL WA 17 OD, M6X1X20, 9.8, 4345M, DOG PT (INFL RST DIAGN ENGY RESV MDL)	97-98		3	11515704
3.	7-A13	14.865	MODULE, INFL RST SEN & DIAG	97-98	Y (AK5)	1	9378281
4.		0.017	NUT, HEX W/CON WA 6X1X5.5 16-OD ZP 9 (INFL RST I/P MDL)	97-98		4	11517293
5.	7-A13	14.865	BRACKET, I/P INFL RST MDL (#50) (INCLS 8, 12)	97-98	Y (AK5)	1	10437332
6.		0.900	SCREW, M6X1X30, 11 THD, 12.5 OD, 4.8, 6047M, P-PT (POSN #2)	97-98		3	11508128
7.	7-A13	14.865	MODULE, I/P INFL RST	98	Y (AK5)	1	10411125
	7-A13	14.865	MODULE, I/P INFL RST (MID MOUNT, MORTON 10" MDL)	97	Y (AK5)	1	10407332

2001 GENERAL MOTORS SERVICE PARTS OPERATIONS CHEVROLET 15Y

cardiagn.com

							1Y14-020
8.		8.921	NUT, WU SHAPE SPR/P/#8-18X.585, PC (PART OF 5)	97-98		1	9433155
9.		8.900	SCREW, M6X1X30, 11 THD, 12.5 OD, 4.8, 6047M, P-PT (I/P PASS KNEE BOLS BRKT)	97-98		2	11508128
10.		8.900	SCREW, M6X1X30, 11 THD, 12.5 OD, 4.8, 6047M, P-PT (POSN #3)	97-98		2	11508128
11.		8.900	SCREW, M6X1X30, 11 THD, 12.5 OD, 4.8, 6047M, P-PT (POSN #1)	97-98		2	11508128
12.	7-N6	10.268	STRIKER, I/P COMPT DR LK (PART OF 5)	97-98	Y (AK5)	1	10269700
	7-N6	10.268	NUT, I/P COMPT DR LK STKR (PART OF 5)	97-98	Y (AK5)	2	10279292
	7-N6	10.268	BOLT, I/P COMPT DR LK STKR (PART OF 5)	97-98	Y (AK5)	1	10281420
13.	7-N6	10.235	BRACKET, I/P PASS KNEE BOLS	97-98	Y	1	10282775
	7-N6	10.235	NUT, I/P PASS KNEE BOLS (M6X1.0) (10.512)	97	Y	4	10237960
	7-N6	10.235	NUT, I/P PASS KNEE BOLS (M6X1.0 ITR "D" THD) (10.512)	98	Y	4	10410398
14.		8.900	BOLT, W/WA (M6X1X25) (F/END INFL RST DISCRM SEN)	97-98		2	11514139
15.	7-A13	14.865	SENSOR, F/END INFL RST DISCRM (16.712)	97-98	Y (AK5)	1	16203545
16.	7-A13	14.865	NUT, INFL RST F/END DISCRM SEN (4.665)	97-98	Y (AK5)	2	10281487
17.	7-A13	14.865	BOLT, STRG WHL INFL RST MDL	97-98	Y (AK5)	2	10406983
18.	7-A13	14.865	CONNECTOR, INLINE-TO INFL RST HARN (BLACK) (10-WAY F) (W/LEADS) (2.535) (AC-DEI CO #PT108)	97-98	Y	1	12085486
19.	7-A13	14.865	CONNECTOR, MDL-INFL RST I/P (2-WAY M) (W/LEADS)	97-98	Y	1	12126040
20.	7-A13	14.865	HARNESS, INFL RST WRG	97	Y	1	12181625
	7-A13	14.865	HARNESS, INFL RST WRG	98	Y	1	12182298
21.	7-A13	14 865	CONNECTOR, INLINE-TO INFL RST I/P MDL (2-WAY F) (W/LEADS) (AC-DELCO #PT767)	97-98	Y	1	12126498
	7-A13	14.865	CONNECTOR, INLINE-TO INFL RST I/P MDL (2-WAY M) (W/LEADS)	97-98	Y	1	12126040
22.	7-A13	14.865	CONNECTOR, MDL-INFL RST DIAGN ENGY RESV (AC-DELCO #PT1099)	97-98	Y	1	15305963
23.	7-A13	14.865	RETAINER, INFL RST RESV ENGY MDL WRG HARN CONN (YELLOW) (USE FOR WIRE STRAIN RELIEF FOR 12-WAY FEMALE CONN)	97-98	Y	1	15304998

cardiagn.com

							1Y14–020
24.	7–A13	14.865	RETAINER, INFL RST RESV ENGY MDL WRG HARN CONN (LOCKS INFL RESTR MDL STRAIN RELIEF RET TO CONN) (W/STRAP & ROUND BUTTON TO HOLD TO RETAINER) (2.530) .	97–98	Y	1	15317991
25.	7–A13	14.865	COIL KIT, INFL RST STRG WHL MDL (FOR STRG COL DETAILS, SEE GROUP 6.)	97–98	Y	1	26087359
26.		N.S.	GROUND WIRE, INFL RST MODULE TO STRG WHL		.....		
27.		N.S.	CONTACT SPRING, HORN (PART OF INFL RST MODULE) ...		.....		
28.		N.S.	ATTACHING PIN, INFL RST MODULE TO STRG WHL		.....		
29.	7–A13	14.865	CONNECTOR, INLINE–TO INFL RST STRG WHL MDL COIL (2–WAY M) (W/2 LEADS, IF 4 LEADS REQ USE 12126494) (AC–DELCO #PT1217)	97–98	Y	1	12126039
30.	7–M13	2.480	HARNESS, FWD LP WRG	97	Y (T96) (EXC T90)	1	12189881
	7–M13	2.480	HARNESS, FWD LP WRG	97	Y (EXC T96)	1	12189883
	7–M13	2.480	HARNESS, FWD LP WRG	98	Y (T96) (EXC JAG, T90)	1	12163322
	7–M13	2.480	HARNESS, FWD LP WRG	98	Y (EXC JAG, T96)	1	12163324
	7–M13	2.480	HARNESS, FWD LP WRG	98	Y (JAG, T96) (EXC JL4, T90)	1	12189515
	7–M13	2.480	HARNESS, FWD LP WRG	98	Y (JAG) (EXC JL4, T96)	1	12189517
	7–M13	2.480	HARNESS, FWD LP WRG	98	Y (JAG, JL4, T96) (EXC T90)	1	12189518
	7–M13	2.480	HARNESS, FWD LP WRG	98	Y (JAG, JL4) (EXC T96)	1	12189520
	7–M13	2.480	HARNESS, FWD LP WRG	97	Y (VD1) (EXPORT)	1	12189883
	7–M13	2.480	HARNESS, FWD LP WRG	97	Y (T90, VE1) (EXPORT)	1	12189884
31.	7–A13	14.865	CONNECTOR, INFL RST F/END DISCM SEN (PART OF 30) (2–WAY F, W/LEADS) (16.712) (AC–DELCO #PT811)	97–98	Y	1	12167147

SERVICE KITS

1.	7–A13	14.865	SWITCH KIT, STRG WHL INFL RST MDL (AIR BAG ON–OFF) (BLACK) (INCLS ST BELT RETR) (AC–DELCO #12455582)	97–98	Y07 (19I)	1	12455582
	7–A13	14.865	SWITCH KIT, STRG WHL INFL RST MDL (AIR BAG ON–OFF) (RED) (INCLS ST BELT RETR) (AC–DELCO #12455584)	97–98	Y07 (94I)	1	12455584
	7–A13	14.865	SWITCH KIT, STRG WHL INFL RST MDL (AIR BAG ON–OFF) (PEWTER) (AC–DELCO #88893537)	97–98	Y07 (92I)	1	88893537
	7–A13	14.865	SWITCH KIT, STRG WHL INFL RST MDL (AIR BAG ON–OFF) (OAK) (INCLS ST BELT RETR) (AC–DELCO #12455585)	98	Y07 (67I)	1	12455585
	7–A13	14.865	SWITCH KIT, STRG WHL INFL RST MDL (AIR BAG ON–OFF) (BLACK) (INCLS ST BELT RETR) (AC–DELCO #12455586)	98	Y67 (19I)	1	12455586

cardiagn.com

	7-A13	14.865	SWITCH KIT, STRG WHL INFL RST MDL (AIR BAG ON-OFF) (PEWTER) (INCLS ST BELT RETR) (AC-DELCO #12455587)	98	Y67 (92I)	1	12455587
	7-A13	14.865	SWITCH KIT, STRG WHL INFL RST MDL (AIR BAG ON-OFF) (RED) (INCLS ST BELT RETR) (AC-DELCO #12455588)	98	Y67 (94I)	1	12455588
	7-A13	14.865	SWITCH KIT, STRG WHL INFL RST MDL (AIR BAG ON-OFF) (CAMEL) (INCLS ST BELT RETR) (AC-DELCO #12455589)	98	Y67 (67I)	1	12455589
2.	7-A13	14.865	SWITCH KIT, INFL RST I/P MDL (AIR BAG ON-OFF) (BLACK) (INCLS ST BELT RETR) (AC-DELCO #12456117)	97-98	Y07 (19I)	1	12456117
	7-A13	14.865	SWITCH KIT, INFL RST I/P MDL (AIR BAG ON-OFF) (PEWTER) (INCLS ST BELT RETR) (AC-DELCO #12456118)	97-98	Y07 (92I)	1	12456118
	7-A13	14.865	SWITCH KIT, INFL RST I/P MDL (AIR BAG ON-OFF) (RED) (INCLS ST BELT RETR) (AC-DELCO #12456119)	97-98	Y07 (94I)	1	12456119
	7-A13	14.865	SWITCH KIT, INFL RST I/P MDL (AIR BAG ON-OFF) (OAK) (AC-DELCO #88893544)	98	Y07 (67I)	1	88893544
	7-A13	14.865	SWITCH KIT, INFL RST I/P MDL (AIR BAG ON-OFF) (PEWTER) (INCLS ST BELT RETR) (AC-DELCO #12456122)	98	Y67 (92I)	1	12456122
	7-A13	14.865	SWITCH KIT, INFL RST I/P MDL (AIR BAG ON-OFF) (RED) (INCLS ST BELT RETR) (AC-DELCO #12456123)	98	Y67 (94I)	1	12456123
	7-A13	14.865	SWITCH KIT, INFL RST I/P MDL (AIR BAG ON-OFF) (CAMEL) (INCLS ST BELT RETR) (AC-DELCO #12456124)	98	Y67 (67I)	1	12456124
	7-A13	14.865	SWITCH KIT, INFL RST I/P MDL (AIR BAG ON-OFF) (BLACK) (AC-DELCO #88893545)	98	Y67 (19I)	1	88893545

RPO DEFINITIONS

AK5 – RESTRAINT SYSTEM,FRONT SEAT,INFLATABLE,DRIVER AND PASSENGER
JAG – BRAKE PROVISIONS ABS LOCATION
JL4 – CONTROL ACTIVE BRAKE
T90 – LAMP,SIGNALING AND MARKER(EXPORT)
T96 – LAMP,FRONT FOG
VD1 – PROVISION OPTIONS,EUROPE(EXPORT)
VE1 – PROVISION OPTIONS,JAPAN(EXPORT)
19I – INTERIOR TRIM,BLACK
67I – INTERIOR TRIM,CAMEL
92I – INTERIOR TRIM SHALE/PEWTER
94I – INTERIOR TRIM FIRETHORN RED (97)

cardiagn.com

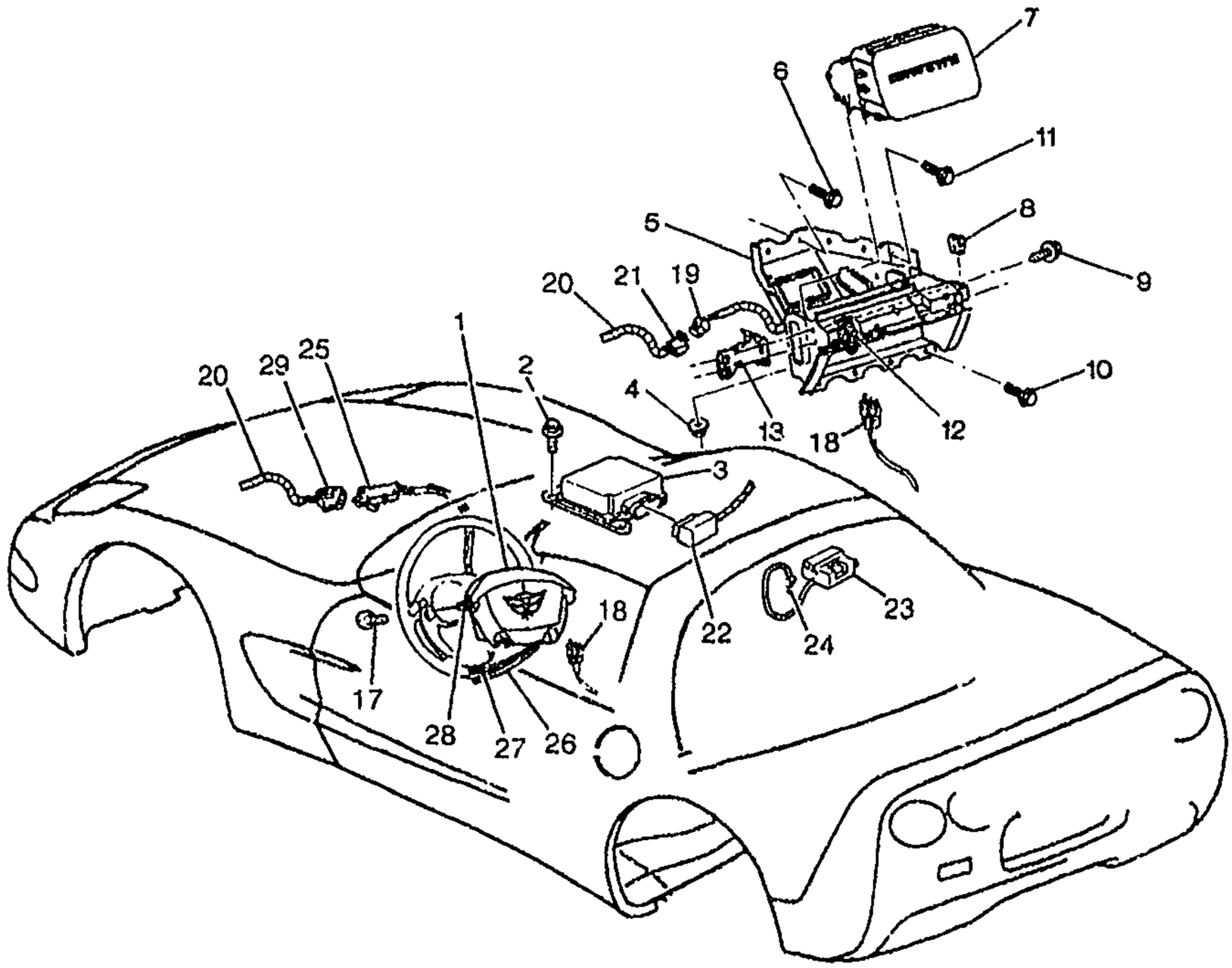

YV

1Y14-031

1999 Y INFLATABLE RESTRAINT SYSTEM (AK5)

1.	7-A13	14.865	MODULE, STRG WHL INFL RST (INCLS 17)	99	Y (AK5)	1 10415723
	7-N2	6.512	MODULE, STRG WHL INFL RST (INCLS 17) (14.865)	99	Y (AK5)	1 10415723
	7-A13	14.865	CONNECTOR, INFL-INFL RST (2-WAY F) (W/LEADS) (AC-DELCO #PT1204)	99	YY67	1 15306044
2.		8.900	BOLT, HEX W/CON WA, M6X1X20 (INFL RST DIAGN ENGY RESV MDL)	99		3 11514623
3.	7-A13	14.865	MODULE, INFL RST SEN & DIAG (TO CTR STACK BRKT)	99	Y (AK5)	1 9380620
4.		8.917	NUT, HEX W/CON WA 6X1X5.5 16-OD ZP 9 (INFL RST I/P MDL)	99		4 11517293
5.	7-A13	14.865	BRACKET, I/P INFL RST MDL (#50) (INCLS 8, 12)	99	Y (AK5)	1 10437332
6.		8.900	SCREW, M6X1X30, 11 THD, 12.5 OD, 4.8, 6047M, P-PT (POSN #2)	99		3 11508128
7.	7-A13	14.865	MODULE, I/P INFL RST	99	Y (AK5)	1 10415724

cardiagn.com

							1Y14-031
	7-A13	14.865	CONNECTOR, MDL-INFL RST SEN & DIAGN (AC-DELCO #PT1376)	99	Y	1	15306322
8.		8.921	NUT, WU SHAPE SPR/P/#8-18X.585, PC (PART OF 5)	99		1	9433155
9.		8.900	SCREW, M6X1X30, 11 THD, 12.5 OD, 4.8, 6047M, P-PT (I/P PASS KNEE BOLS BRKT)	99		2	11508128
10.		8.900	SCREW, M6X1X30, 11 THD, 12.5 OD, 4.8, 6047M, P-PT (POSN #3)	99		2	11508128
11.		8.900	SCREW, M6X1X30, 11 THD, 12.5 OD, 4.8, 6047M, P-PT (POSN #1)	99		2	11508128
12.	7-N6	10.268	STRIKER, I/P COMPT DR LK (PART OF 5)	99	Y (AK5)	1	10269700
	7-N6	10.268	NUT, I/P COMPT DR LK STKR (PART OF 5)	99	Y (AK5)	2	10279292
	7-N6	10.268	BOLT, I/P COMPT DR LK STKR (PART OF 5)	99	Y (AK5)	1	10281420
13.	7-N6	10.235	BRACKET, I/P PASS KNEE BOLS	99	Y	1	10282775
		8.915	NUT, M6X1, 10MM HOLE, 12.9 OD, 4345M (I/P PASS KNEE BOLS)	99		AR	11516763
17.	7-A13	14.865	BOLT, STRG WHL INFL RST MDL (PART OF 1)	99	Y (AK5)	2	10406983
18.		N.S.	CONNECTOR, INLINE-TO INFL RST HARN				
19.	7-A13	14.865	CONNECTOR, MDL-INFL RST SEN & DIAGN (AC-DELCO #PT1376)	99	Y	1	15306322
20.		N.S.	HARNESS, INFL RST WRG				
21.	7-A13	14.865	CONNECTOR, INLINE-TO INFL RST I/P MDL (2-WAY F) (W/LEADS) (AC-DELCO #PT767)	99	Y	1	12126498
	7-A13	14.865	CONNECTOR, INLINE-TO INFL RST I/P MDL (2-WAY M) (W/LEADS)	99	Y	1	12126040
22.	7-A13	14.865	CONNECTOR, MDL-INFL RST SEN & DIAGN (AC-DELCO #PT1376)	99	Y	1	15306322
23.	7-A13	14.865	RETAINER, INFL RST RESV ENGY MDL WRG HARN CONN	99	Y	1	15318147
	7-A13	14.865	RETAINER, INFL RST RESV ENGY MDL WRG HARN CONN (USED FOR WIRE STRAIN RELIEF FOR 18-WAY F CONN)	99	Y	1	15355022
	7-A13	14.865	RETAINER, INFL RST RESV ENGY MDL WRG HARN CONN (AXIAL-TYPE RETAINER W/STRAP) (CONNECTOR POSITION ASSURANCE) (AXIAL TYPE W/TETHERED STRP..CONN POSITION ASSURANCE)	99	Y	1	15318141
24.	7-A13	14.865	RETAINER, INFL RST RESV ENGY MDL WRG HARN CONN	99	Y	1	15318147

cardiagn.com

							1Y14-031
	7-A13	14.865	RETAINER, INFL RST RESV ENGY MDL WRG HARN CONN (USED FOR WIRE STRAIN RELIEF FOR 18-WAY F CONN) .	99	Y	1	15355022
	7-A13	14.865	RETAINER, INFL RST RESV ENGY MDL WRG HARN CONN (AXIAL-TYPE RETAINER W/STRAP) (CONNECTOR POSITION ASSURANCE) (AXIAL TYPE W/TETHERED STRP.CONN POSITION ASSURANCE)	99	Y	1	15318141
25.	7-A13	14.865	COIL, STRG WHL INFL RST MDL (FOR STRG COL DETAILS, SEE GROUP 6.)	99	Y	1	26069710
26.		N.S.	GROUND WIRE, INFL RST MODULE TO STRG WHL		.....		
27.		N.S.	CONTACT SPRING, HORN (PART OF INFL RST MODULE) ...		.....		
28.		N.S.	ATTACHING PIN, INFL RST MODULE TO STRG WHL		.....		
29.	7-A13	14.865	CONNECTOR, INLINE--TO INFL RST STRG WHL MDL COIL (2-WAY M) (W/4 LEADS..2 IN BOTH CAV A & B)	99	Y	1	12102101

SERVICE KITS

1.		N.S.	SWITCH KIT, STRG WHL INFL RST MDL		.....		
2.	7-A13	14.865	SWITCH KIT, INFL RST I/P MDL (AIR BAG ON-OFF) (PEWTER) (INCLS ST BELT RETR) (AC-DELCO #12458575)	99	Y07-37 (92I)	1	12458575
	7-A13	14.865	SWITCH KIT, INFL RST I/P MDL (AIR BAG ON-OFF) (RED) (INCLS ST BELT RETR) (AC-DELCO #12458576)	99	Y07-37 (94I)	1	12458576
	7-A13	14.865	SWITCH KIT, INFL RST I/P MDL (AIR BAG ON-OFF) (BLACK) (AC-DELCO #88893542)	99	Y07-37 (19I)	1	88893542
	7-A13	14.865	SWITCH KIT, INFL RST I/P MDL (AIR BAG ON-OFF) (OAK) (AC-DELCO #88893544)	99	Y07-37 (67I)	1	88893544
	7-A13	14.865	SWITCH KIT, INFL RST I/P MDL (AIR BAG ON-OFF) (BLK) (INCLS ST BELT RETR) (AC-DELCO #12458578)	99	Y67 (10I)	1	12458578
	7-A13	14.865	SWITCH KIT, INFL RST I/P MDL (AIR BAG ON-OFF) (PEWTER) (INCLS ST BELT RETR) (AC-DELCO #12458579)	99	Y67 (92I)	1	12458579

cardiagn.com

7–A13	14.865	SWITCH KIT, INFL RST I/P MDL (AIR BAG ON–OFF) (RED) (INCLS ST BELT RETR) (AC–DELCO #12458580)	99	Y67 (94I)	1	12458580
7–A13	14.865	SWITCH KIT, INFL RST I/P MDL (AIR BAG ON–OFF) (CAMEL) (INCLS ST BELT RETR) (AC–DELCO #12458581)	99	Y67 (67I)	1	12458581

RPO DEFINITIONS

AK5 – RESTRAINT SYSTEM,FRONT SEAT,INFLATABLE,DRIVER AND PASSENGER
19I – INTERIOR TRIM,BLACK
67I – INTERIOR TRIM,CAMEL
92I – INTERIOR TRIM SHALE/PEWTER
94I – INTERIOR TRIM FIRETHORN RED (97)

cardiagn.com

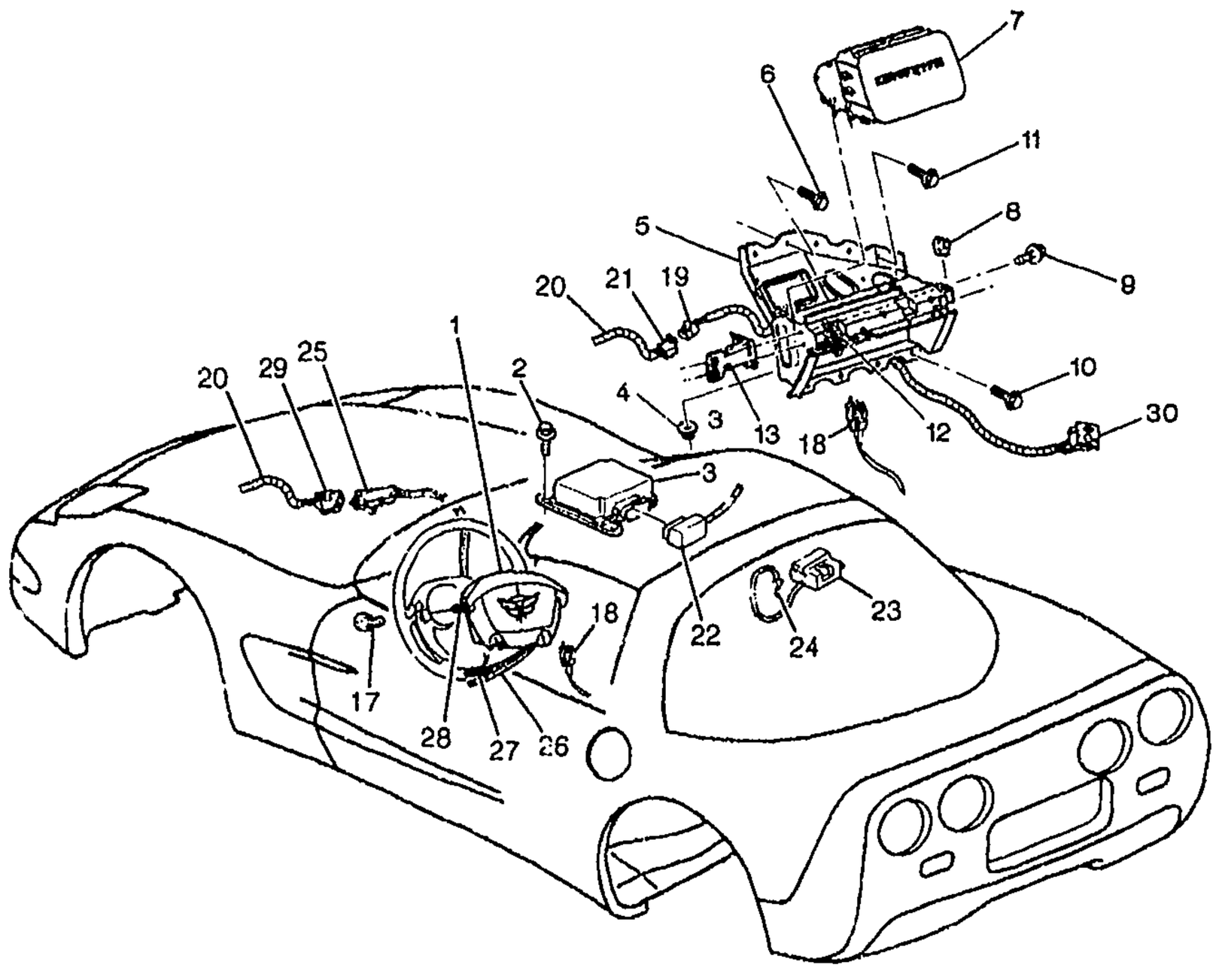

bc

1Y14-038

2000-2002 Y INFLATABLE RESTRAINT SYSTEM (AK5)

1.	7-A13	14.865	MODULE, STRG WHL INFL RST (INCLS 17)	00-02	Y (AK5)	1	10415723
	7--N2	6.512	MODULE, STRG WHL INFL RST (INCLS 17) (14.865)	00-02	Y (AK5)	1	10415723
2.		8.900	BOLT, HEX W/CON WA, M6X1X20 (INFL RST DIAGN ENGY RESV MDL)	00-02	.....	3	11514623
3.	7-A13	14.865	MODULE, INFL RST SEN & DIAG (TO CTR STACK BRKT)	00	Y07-67 (AK5, C88) ...	1	9391830
	7-A13	14.865	MODULE, INFL RST SEN & DIAG (TO CTR STACK BRKT)	00	Y (AK5) (EXC C88)	1	9391990

© 2001 GENERAL MOTORS SERVICE PARTS OPERATIONS-CHEVROLET-15.

cardiagn.com

							1Y14-038
	7-A13	14.865	MODULE, INFL RST SEN & DIAG (TO CTR STACK BRKT)	01-02	Y (AK5) (EXC C88)	1	12209740
	7-A13	14.865	MODULE, INFL RST SEN & DIAG (TO CTR STACK BRKT)	00-02	Y07-67 (AK5, C88) (EXPORT)	1	12209730
4.		8.917	NUT, HEX W/CON WA 6X1X5.5 16-OD ZP 9 (INFL RST I/P MDL) .	00-02	.....	4	11517293
5.	7-A13	14.865	BRACKET, I/P INFL RST MDL (#50) (INCLS 8, 12)	00-02	Y (AK5)	1	10437332
6.		8.900	SCREW, M6X1X30, 11 THD, 12.5 OD, 4.8, 6047M, P-PT (POSN #2)	00-02	.....	3	11508128
7.	7-A13	14.865	MODULE, I/P INFL RST	00-02	Y (AK5)	1	10415724
8.		8.921	NUT, WU SHAPE SPR/P/#8-18X.585, PC (PART OF 5)	00-02	.....	1	9433155
9.		8.900	SCREW, M6X1X30, 11 THD, 12.5 OD, 4.8, 6047M, P-PT (I/P PASS KNEE BOLS BRKT)	00-02	.....	2	11508128
10.		8.900	SCREW, M6X1X30, 11 THD, 12.5 OD, 4.8, 6047M, P-PT (POSN #3)	00-02	.....	2	11508128
11.		8.900	SCREW, M6X1X30, 11 THD, 12.5 OD, 4.8, 6047M, P-PT (POSN #1)	00-02	.....	2	11508128
12.	7-N6	10.268	STRIKER, I/P COMPT DR LK (PART OF 5)	00-02	Y (AK5)	1	10269700
	7-N6	10.268	NUT, I/P COMPT DR LK STKR (PART OF 5)	00-02	Y (AK5)	2	10279292
	7-N6	10.268	BOLT, I/P COMPT DR LK STKR (PART OF 5)	00-02	Y (AK5)	1	10281420
13.	7-N6	10.235	BRACKET, I/P PASS KNEE BOLS	00-02	Y	1	10282775
		8.915	NUT, M6X1, 10MM HOLE, 12.9 OD, 4345M (I/P PASS KNEE BOLS)	00-02	.....	AR	11516763
17.	7-A13	14.865	BOLT, STRG WHL INFL RST MDL (PART OF 1)	00-02	Y (AK5)	2	10406983
18.		N.S.	CONNECTOR, INLINE-TO INFL RST HARN		.....		
19.	7-A13	14.865	CONNECTOP, MDL-INFL RST SEN & DIAGN (AC-DELCO #PT1376)	00-02	Y	1	15306322
20.		N.S.	HARNESS, INFL RST WRG		.....		
21.	7-A13	14.865	CONNECTOR, INLINE-TO INFL RST I/P MDL (2-WAY F) (W/LEADS) (AC-DELCO #PT767)	00	Y	1	12126498
	7-A13	14.865	CONNECTOR, INLINE-TO INFL RST I/P MDL (2-WAY M) (W/LEADS)	00	Y	1	12126040
	7-A13	14.865	CONNECTOR, INLINE-TO INFL RST HARN (2-WAY M) (W/4 LEADS..2 IN BOTH CAV A & B) ..	01-02	YY67	1	12102101
	7-A13	14.865	CONNECTOR, INLINE-TO INFL RST HARN (2-WAY FEMALE M/P 280. CONSISTS OF 12077921 W/LEADS.) (2-WAY F) (W/LEADS) (AC-DELCO #PT767)	01-02	YY67	1	12126498

cardiagn.com

22.	7-A13	14.865	CONNECTOR, MDL-INFL RST SEN & DIAGN (AC-DELCO #PT1376)	00-02	Y	1	15306322
23.	7-A13	14.865	RETAINER, INFL RST RESV ENGY MDL WRG HARN CONN	00-02	Y	1	15318147
	7-A13	14.865	RETAINER, INFL RST RESV ENGY MDL WRG HARN CONN (USED FOR WIRE STRAIN RELIEF FOR 18-WAY F CONN)	00	Y	1	15355022
	7-A13	14.865	RETAINER, INFL RST RESV ENGY MDL WRG HARN CONN (AXIAL-TYPE RETAINER W/STRAP) (CONNECTOR POSITION ASSURANCE) (AXIAL TYPE W/TETHERED STRP.CONN POSITION ASSURANCE)	00	Y	1	15318141
24.	7-A13	14.865	RETAINER, INFL RST RESV ENGY MDL WRG HARN CONN	00-02	Y	1	15318147
	7-A13	14.865	RETAINER, INFL RST RESV ENGY MDL WRG HARN CONN (USED FOR WIRE STRAIN RELIEF FOR 18-WAY F CONN)	00	Y	1	15355022
	7-A13	14.865	RETAINER, INFL RST RESV ENGY MDL WRG HARN CONN (AXIAL-TYPE RETAINER W/STRAP) (CONNECTOR POSITION ASSURANCE) (AXIAL TYPE W/TETHERED STRP.CONN POSITION ASSURANCE)	00	Y	1	15318141
25.	7-A13	14.865	COIL, STRG WHL INFL RST MDL (FOR STRG COL DETAILS, SEE GROUP 6.)	00-01	Y	1	26069710
	7-A13	14.865	COIL, STRG WHL INFL RST MDL (FOR STRG COL DETAILS, SEE GROUP 6.)	02	Y	1	26095710
26.		N.S.	GROUND WIRE, INFL RST MODULE TO STRG WHL				
27.		N.S.	CONTACT SPRING, HORN (PART OF INFL RST MODULE)				
28.		N.S.	ATTACHING PIN, INFL RST MODULE TO STRG WHL				
29.	7-A13	14.865	CONNECTOR, INLINE-TO INFL RST STRG WHL MDL COIL (2-WAY M) (W/4 LEADS..2 IN BOTH CAV A & B)	00-02	Y	1	12102101
30.	7-A13	14.865	SWITCH, I/P INFL RST MDL	00-02	Y (EXC C88)	1	10440761
	7-A13	14.865	CONNECTOR, SW-INFL RST I/P MDL (6-WAY FEMALE M/P 150) (W/LEADS) (16.712) (AC-DELCO #PT1141)	00	Y07 (M30, CJ2, JL4) (EXC T89)	1	15306014
	7-A13	14.865	CONNECTOR, SW-INFL RST I/P MDL (2-WAY F W/LEADS W/INDEX TAB OTR EDGE OF CAVITY B) (2.535) (AC-DELCO #PT146)	01-02	YY	1	12085535

cardiagn.com

						11.4-038
7-A13	14.865	CONNECTOR, SW-INFL RST I/P MDL (2-WAY F W/LEADS W/INDEX TAB OTR EDGE OF CAVITY B) (2.535) (AC-DELCO #PT146)	02	YY67 (M30, CJ2, N37) (EXC T89)	1	12085535
7-A13	14.865	CONNECTOR, SW-INFL RST I/P MDL (6-WAY FEMALE M/P 150 (W/LEADS) .) (6-WAY FEMALE M/P 150) (W/LEADS) (16.712) (AC-DELCO #PT1141)	01-02	YY67	1	15306014

RPO DEFINITIONS
AK5 – RESTRAINT SYSTEM,FRONT SEAT,INFLATABLE,DRIVER AND PASSENGER
CJ2 – HVAC SYSTEM AIR CONDITIONER FRT, AUTO TEMP CONT, AUX TEMP CONT
C88 - SWITCH INFL RST I/P MDL MAN SUPPRESSION -- DELETE
JL4 – CONTROL ACTIVE BRAKE
M30 – TRANSMISSION,AUTOMATIC 4 SPEED,4L60E,ELECTRONIC
N37 – STEERING COLUMN,TILT AND TELESCOPING
T89 – LAMP,TAIL AND STOP(EXPORT)

cardiagn.com

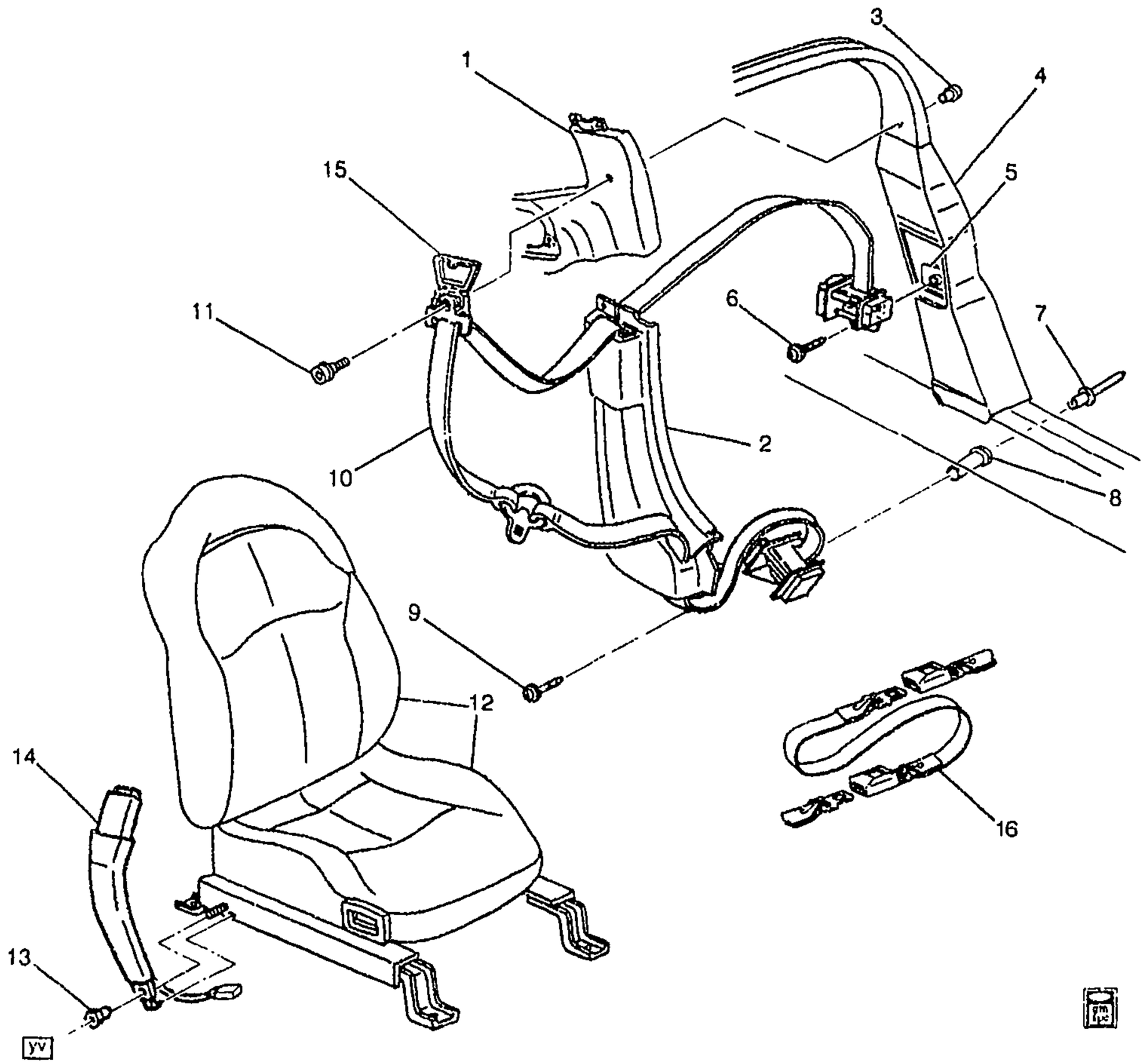

1Y14-021

1997-2002 Y07 SEAT BELT HARDWARE

1.	7-C7	15.222	PANEL, R/CMPT SI TR	97-02	Y07	RH	10407543
	7-C7	15.222	PANEL, R/CMPT SI TR	97-02	Y07	LH	10407544
2.	7-A9	14.731	PANEL, BODY L/PLR TR (BLACK)	97-00	Y (19I)	LH	10258547
	7-A9	14.731	PANEL, BODY L/PLR TR (PEWTER)	97	Y07 (92I)	RH	10272394
	7-A9	14.731	PANEL, BODY L/PLR TR (RED) ..	97-99	Y (94I)	LH	10272395
	7-A9	14.731	PANEL, BODY L/PLR TR (BLACK)	97-00	Y (19I)	RH	10426020
	7-A9	14.731	PANEL, BODY L/PLR TR (PEWTER)	97	Y07 (92I)	LH	10426021
	7-A9	14.731	PANEL, BODY L/PLR TR (RED) ..	97-99	Y (94I)	RH	10426024
	7-A9	14.731	PANEL, BODY L/PLR TR (PEWTER)	98-02	Y07-67 (92I)	RH	10272394

cardiagn.com

	7–A9	14.731	PANEL, BODY L/PLR TR (CAMEL)	98–02	Y07–67 (67I)	LH	10285246
	7–A9	14.731	PANEL, BODY L/PLR TR (PEWTER)	98–02	Y07–67 (92I)	LH	10426021
	7–A9	14.731	PANEL, BODY L/PLR TR (CAMEL)	98–02	Y07–67 (67I)	RH	10426026
	7–A9	14.731	PANEL, BODY L/PLR TR (RED)	00	Y (70I)	LH	10426027
	7–A9	14.731	PANEL, BODY L/PLR TR (RED)	00	Y (70I)	RH	10426028
	7–A9	14.731	PANEL, BODY L/PLR TR (BLACK)	01–02	YY07–67 (19I)	LH	10258547
	7–A9	14.731	PANEL, BODY L/PLR TR (BLACK)	01–02	YY07–67 (19I)	RH	10426020
	7–A9	14.731	PANEL, BODY L/PLR TR (RED)	01–02	YY07–67 (70I)	LH	10426027
	7–A9	14.731	PANEL, BODY L/PLR TR (RED)	01–02	YY07–67 (70I)	RH	10426028
3.		N.S.	NUT, D/SEAT SHLDR BELT GDE				
		N.S.	NUT, P/SEAT SHLDR BELT GDE				
4.	7–N24	12.944	PANEL, BODY L/PLR INR (#55) (12.942)	97–98	Y07	LH	12458933
	7–N24	12.944	PANEL, BODY L/PLR INR (#55) (12.942)	99–02	Y07–37	LH	12458933
	7–N24	12.944	PANEL, BODY L/PLR INR (#55) (12.942)	97–98	Y07	RH	12458932
	7–N24	12.944	PANEL, BODY L/PLR INR (#55) (12.942)	99–02	Y07–37	RH	12458932
5.	7–A21	14.875	PLATE, D/SEAT BELT ANC (BKL SI) (OVAL) (16.714)	97–02	Y	1	15734139
	7–A21	14.875	PLATE, P/SEAT BELT RETR ANC (OVAL) (16.714)	97–02	Y	1	15734139
6.	7–A21	14.875	BOLT, D/SEAT BELT (RETR SI) (M12 X 1.75 X 30)	97–02	Y (AK5)	1	20247145
	7–A21	14.875	BOLT, P/SEAT BELT (RETR SI) (M12 X 1.75 X 30)	97–02	Y (AK5)	1	20247145
7.		8.967	RIVET, POP, 3/16X.375 SHANK, .562 OD DOME, SELF PLUG, AL, PL, .047–.078 GRP (D/ST BELT RETR ANC PLT)	97–02		2	9442468
		8.967	RIVET, POP, 3/16X.375 SHANK, .562 OD DOME, SELF PLUG, AL, PL, .047–.078 GRP (P/ST BELT RETR ANC PLT)	97–02		2	9442468
8.	7–A21	14.875	PLATE, D/SEAT BELT RETR ANC	97–02	Y (AK5)	1	10403689
	7–A21	14.875	PLATE, P/SEAT BELT RETR ANC	97–02	Y (AK5)	1	10403689
9.	7–A21	14.875	BOLT, D/SEAT BELT RETR (M12 X 1.75 X 30)	97–02	Y (AK5)	1	20247145
	7–A21	14.875	BOLT, P/SEAT BELT RETR (M12 X 1.75 X 30)	97–02	Y (AK5)	1	20247145
10.	7–A21	14.875	BELT KIT, D/SEAT (RETR SI)	97–98	Y07 (AK5, 19I) (EXC AX4)	1	88893509
	7–A21	14.875	BELT KIT, D/SEAT (RETR SI)	97–98	Y07 (AK5, 92I) (EXC AX4)	1	88893510
	7–A21	14.875	BELT KIT, D/SEAT (RETR SI) (RED)	97–99	Y07 (AK5, 94I) (EXC AX4)	1	88894736
	7–A21	14.875	BELT KIT, D/SEAT (RETR SI) (OAK)	98–99	Y07 (AK5, 67I) (EXC AX4)	1	88893511
	7–A21	14.875	BELT KIT, D/SEAT (RETR SI)	99	Y07–37 (AK5, 19I) (EXC AX4)	1	88893509
	7–A21	14.875	BELT KIT, D/SEAT (RETR SI)	99	Y07–37 (AK5, 92I) (EXC AX4)	1	88893510

cardiagn.com

7–A21	14.875	BELT KIT, D/SEAT (RETR SI) (USED ON VEHICLES PRIOR TO VIN #1G1YY22G7Y5119656)	00	Y07–37 (AK5, 70I) (EXC AX4) (1ST DES) ..	1	88893508
7–A21	14.875	BELT KIT, D/SEAT (RETR SI) (USE ON VEHICLES PRIOR TO VIN #1G1YY22G7Y5119656)	00	Y07–37 (AK5, 19I) (EXC AX4) (1ST DES) ..	1	88893509
7–A21	14.875	BELT KIT, D/SEAT (RETR SI)	00	Y07–37 (AK5, 92I) (EXC AX4) (1ST DES) ..	1	88893510
7–A21	14.875	BELT KIT, D/SEAT (RETR SI) (OAK)	00	Y07 (AK5, 67I) (EXC AX4) (1ST DES)	1	88893511
7–A21	14.875	BELT KIT, D/SEAT (RETR SI) (RED)	00	Y07–37 (AK5, 94I) (EXC AX4)	1	88894736
7–A21	14.875	BELT KIT, D/SEAT (RETR SI) (RED) (USED ON VEHICLES W/VIN #1G1YY22C7Y5119656 AND FUTURE)	00	Y07–37 (AK5, 70I) (EXC AX4) (2ND DES) .	1	88895164
7–A21	14.875	BELT KIT, D/SEAT (PETR SI) (BLACK) (USED ON VEHICLES W/VIN #1G1YY22G7Y5119656 AND FUTURE)	00	Y07–37 (AK5, 19I) (EXC AX4) (2ND DES) .	1	88895165
7–A21	14.875	BELT KIT, D/SEAT (RETR SI) (PEWTER) (USED ON VEHICLES W/VIN #1G1YY22G7Y5119656 AND FUTURE)	00	Y07–37 (AK5, 92I) (EXC AX4) (2ND DES) .	1	88895166
7–A21	14.875	BELT KIT, D/SEAT (RETR SI) (OAK) (USED ON VEHICLES W/VIN #1G1YY22G7Y5119656 AND FUTURE)	00	Y07 (AK5, 67I) (EXC AX4) (2ND DES)	1	88895167
7–A21	14.875	BELT KIT, D/SEAT (RETR SI) (RED)	01–02	Y07 (AK5, 70I) (EXC AX4)	1	88895164
7–A21	14.875	BELT KIT, D/SEAT (RETR SI) (BLACK)	01–02	Y07 (AK5, 19I) (EXC AX4)	1	88895165
7–A21	14.875	BELT KIT, D/SEAT (RETR SI) (PEWTER)	01–02	Y07 (AK5, 92I) (EXC AX4)	1	88895166
7–A21	14.875	BELT KIT, D/SEAT (RETR SI) (OAK)	01–02	Y07 (AK5, 67I) (EXC AX4)	1	88895167
7–A21	14.875	BELT KIT, P/SEAT (RETR SI)	97–98	Y07 (AK5, 19I) (EXC AX4)	1	88893513
7–A21	14.875	BELT KIT, P/SEAT (RETR SI)	97–98	Y07 (AK5, 92I) (EXC AX4)	1	88893514
7–A21	14.875	BELT KIT, P/SEAT (RETR SI) (RED)	97–99	Y07 (AK5, 94I) (EXC AX4)	1	88894738
7–A21	14.875	BELT KIT, P/SEAT (RETR SI) (OAK)	98–99	Y07 (AK5, 67I) (EXC AX4)	1	88893515
7–A21	14.875	BELT KIT, P/SEAT (RETR SI)	99	Y07–37 (AK5, 19I) (EXC AX4)	1	88893513
7–A21	14.875	BELT KIT, P/SEAT (RETR SI)	99	Y07–37 (AK5, 92I) (EXC AX4)	1	88893514
7–A21	14.875	BELT KIT, P/SEAT (RETR SI) (USED ON VEHICLES PRIOR TO VIN #1G1YY22G7Y5119656)	00	Y07–37 (AK5, 19I) (EXC AX4) (1ST DES) ..	1	88893513
7–A21	14.875	BELT KIT, P/SEAT (RETR SI) (USED ON VEHICLES PRIOR TO VIN #1G1YY22G7Y5119656)	00	Y07–37 (AK5, 92I) (EXC AX4) (1ST DES) ..	1	88893514
7–A21	14.875	BELT KIT, P/SEAT (RETR SI) (OAK) (USED ON VEHICLES PRIOR TO VIN #1G1YY22G7Y5119656)	00	Y07 (AK5, 67I) (EXC AX4) (1ST DES)	1	88893515

cardiagn.com

7–A21	14.875	BELT KIT, P/SEAT (RETR SI) (RED)	00	Y07–37 (AK5, 94I) (EXC AX4)	1	88894738
7–A21	14.875	BELT KIT, P/SEAT (RETR SI) (RED) (DOMESTIC)	00	Y07 (AK5, 70I) (EXC AX4) (2ND DES)	1	88895172
7–A21	14.875	BELT KIT, P/SEAT (RETR SI) (BLACK) (USED ON VEHICLES W/VIN #1G1YY22G7Y5119656 AND FUTURE)	00	Y07–37 (AK5, 19I) (EXC AX4) (2ND DES)	1	88895173
7–A21	14.875	BELT KIT, P/SEAT (RETR SI) (PEWTER) (USED ON VEHICLES W/VIN #1G1YY22G7Y5119656 AND FUTURE)	00	Y07–37 (AK5, 92I) (EXC AX4) (2ND DES)	1	88895174
7–A21	14.875	BELT KIT, P/SEAT (RETR SI) (OAK) (USED ON VEHICLES W/VIN #1G1YY22G7Y5119656 AND FUTURE)	00	Y07 (AK5, 67I) (EXC AX4) (2ND DES)	1	88895175
7–A21	14.875	BELT KIT, P/SEAT (RETR SI) (RED) (DOMESTIC)	01–02	Y07 (AK5, 70I) (EXC AX4, C88)	1	88895172
7–A21	14.875	BELT KIT, P/SEAT (RETR SI) (BLACK)	01–02	Y07–37 (AK5, 19I) (EXC AX4, C88)	1	88895173
7–A21	14.875	BELT KIT, P/SEAT (RETR SI) (PEWTER)	01–02	Y07 (AK5, 92I) (EXC AX4, C88)	1	88895174
7–A21	14.875	BELT KIT, P/SEAT (RETR SI) (OAK)	01–02	Y07 (AK5, 67I) (EXC AX4, C88)	1	88895175
7–A21	14.875	BELT KIT, P/SEAT (RETR SI) (DOMESTIC) (USED ON VEHICLES PRIOR TO VIN #1G1YY22G7Y5119656)	00	Y07 (AK5, 70I) (EXC AX4) (1ST DES)	1	88893512
7–A21	14.875	BELT, D/SEAT (RETR SI) (BLACK)	97–98	Y07 (AK5, AX4, 19I) (EXPORT)	1	10434373
7–A21	14.875	BELT, D/SEAT (RETR SI) (PEWTER)	97–99	Y07 (AK5, AX4, 92I) (EXPORT)	1	10434374
7–A21	14.875	BELT, D/SEAT (RETR SI) (RED)	97–00	Y07 (AK5, AX4, 94I) (EXPORT)	1	10443585
7–A21	14.875	BELT, D/SEAT (RETR SI) (OAK)	98–99	Y07 (AK5, AX4, 67I) (EXPORT)	1	10434375
7–A21	14.875	BELT, D/SEAT (RETR SI) (BLACK)	99	Y07–37 (AK5, AX4, 19I) (EXPORT)	1	10434373
7–A21	14.875	BELT, D/SEAT (RETR SI) (RED) (USED ON VEHICLES PRIOR TO VIN #1G1YY22G7Y5119656)	00	Y07 (AK5, AX4, 70I) (2ND DES) (EXPORT)	1	10409877
7–A21	14.875	BELT, D/SEAT (RETR SI) (RED) (USED ON VEHICLES PRIOR TO VIN #1G1YY22G7Y5119656)	00	Y07 (AK5, AX4, 70I) (1ST DES) (EXPORT)	1	10434372
7–A21	14.875	BELT, D/SEAT (RETR SI) (BLACK) (USED ON VEHICLES PRIOR TO VIN #1G1YY22G7Y5119656)	00	Y07–37 (AK5, AX4, 19I) (1ST DES) (EXPORT)	1	10434373
7–A21	14.875	BELT, D/SEAT (RETR SI) (PEWTER) (USED ON VEHICLES PRIOR TO VIN #1G1YY22G7Y5119656)	00	Y07 (AK5, AX4, 92I) (1ST DES) (EXPORT)	1	10434374
7–A21	14.875	BELT, D/SEAT (RETR SI) (OAK) (USED ON VEHICLES PRIOR TO VIN #1G1YY22G7Y5119656)	00	Y07 (AK5, AX4, 67I) (1ST DES) (EXPORT)	1	10434375
7–A21	14.875	BELT, D/SEAT (RETR SI) (RED) (USED ON VEHICLES W/VIN #1G1YY22G7Y5119656 AND FUTURE)	00	Y07 (AK5, AX4, 70I) (2ND DES) (EXPORT)	1	10442977

cardiagn.com

7–A21	14.875	BELT, D/SEAT (RETR SI) (BLACK) (USED ON VEHICLES W/VIN #1G1YY22G7Y5119656 AND FUTURE)	00	Y07–37 (AK5, AX4, 19I) (2ND DES) (EXPORT) ..	1	10442978
7–A21	14.875	BELT, D/SEAT (RETR SI) (PEWTER) (USED ON VEHICLES W/VIN #1G1YY22G7Y5119656 AND FUTURE)	00	Y07 (AK5, AX4, 92I) (2ND DES) (EXPORT) ..	1	10442979
7–A21	14.875	BELT, D/SEAT (RETR SI) (OAK) (USED ON VEHICLES W/VIN #1G1YY22G7Y5119656 AND FUTURE)	00	Y07 (AK5, AX4, 67I) (2ND DES) (EXPORT) ..	1	10442980
7–A21	14.875	BELT, D/SEAT (RETR SI) (RED) ..	01–02	Y07 (AK5, AX4, 70I) (EXPORT)	1	10442977
7–A21	14.875	BELT, D/SEAT (RETR SI) (BLACK)	01–02	Y07 (AK5, AX4, 19I) (EXPORT)	1	10442978
7–A21	14.875	BELT, D/SEAT (RETR SI) (PEWTER)	01–02	Y07–37 (AK5, AX4, 92I) (EXPORT)	1	10442979
7–A21	14.875	BELT, D/SEAT (RETR SI) (OAK) ..	01–02	Y07–37 (AK5, AX4, 67I) (EXPORT)	1	10442980
7–A21	14.875	BELT, P/SEAT (RETR SI) (BLACK)	97–98	Y07 (AK5, AX4, 19I) (EXPORT)	1	10434539
7–A21	14.875	BELT, P/SEAT (RETR SI) (PEWTER)	97–98	Y07 (AK5, AX4, 92I) (EXPORT)	1	10434540
7–A21	14.875	BELT, P/SEAT (RETR SI) (RED) ..	97–00	Y07 (AK5, AX4, 94I) (EXPORT)	1	10443591
7–A21	14.875	BELT, P/SEAT (RETR SI) (OAK) ..	98–99	Y07 (AX4, 67I) (EXPORT)	1	10434541
7–A21	14.875	BELT, P/SEAT (RETR SI) (BLACK)	99	Y07–37 (AK5, AX4, 19I) (EXPORT)	1	10434539
7–A21	14.875	BELT, P/SEAT (RETR SI) (PEWTER)	99	Y07–37 (AK5, AX4, 92I) (EXPORT)	1	10434540
7–A21	14.875	BELT, P/SEAT (RETR SI) (RED) (USED ON VEHICLES PRIOR TO VIN #1G1YY22G7Y5119656)	00	Y07 (AK5, AX4, 70I) (1ST DES) (EXPORT) ..	1	10434538
7–A21	14.875	BELT, P/SEAT (RETR SI) (BLACK) (USED ON VEHICLES PRIOR TO VIN #1G1YY22G7Y5119656)	00	Y07–37 (AK5, AX4, 19I) (1ST DES) (EXPORT) ..	1	10434539
7–A21	14.875	BELT, P/SEAT (RETR SI) (PEWTER) (USED ON VEHICLES PRIOR TO VIN #1G1YY22G7Y5119656)	00	Y07–37 (AK5, AX4, 92I) (1ST DES) (EXPORT) ..	1	10434540
7–A21	14.875	BELT, P/SEAT (RETR SI) (OAK) ..	00	Y07 (AX4, 67I) (1ST DES) (EXPORT)	1	10434541
7–A21	14.875	BELT, P/SEAT (RETR SI) (RED) ..	00–02	Y07 (AK5, C88, 70I) (EXC AX4) (EXPORT) ..	1	10441294
7–A21	14.875	BELT, P/SEAT (RETR SI) (BLACK)	00–02	Y07 (AK5, C88, 19I) (EXC AX4) (EXPORT) ..	1	10441295
7–A21	14.875	BELT, P/SEAT (RETR SI) (PEWTER)	00–02	Y07 (AK5, C88, 92I) (EXC AX4) (EXPORT) ..	1	10441296
7–A21	14.875	BELT, P/SEAT (RETR SI) (OAK) ..	00–02	Y07 (AK5, C88, 67I) (EXC AX4) (EXPORT) ..	1	10441297
7–A21	14.875	BELT, P/SEAT (RETR SI) (RED) (USED ON VEHICLES W/VIN #1G1YY22G7Y5119656 AND FUTURE)	00	Y07 (AK5, AX4, 70I) (2ND DES) (EXPORT) ..	1	10442989

cardiagn.com

	7–A21	14.875	BELT, P/SEAT (RETR SI) (BLACK) (USED ON VEHICLES W/VIN #1G1YY22G7Y5119656 AND FUTURE)	00	Y07–37 (AK5, AX4, 19I) (2ND DES) (EXPORT) ..	1	10442990
	7–A21	14.875	BELT, P/SEAT (RETR SI) (PEWTER) (USED ON VEHICLES W/VIN #1G1YY22G7Y5119656 AND FUTURE)	00	Y07–37 (AK5, AX4, 92I) (2ND DES) (EXPORT) ..	1	10442991
	7–A21	14.875	BELT, P/SEAT (RETR SI) (OAK) (USED ON VEHICLES W/VIN #1G1YY22G7Y5119656 AND FUTURE)	00	Y07 (AK5, AX4, 67I) (2ND DES) (EXPORT) ..	1	10442992
	7–A21	14.875	BELT, P/SEAT (RETR SI) (OAK) ..	01–02	Y07 (AK5, AX4, 67I) (EXC C88) (EXPORT) ..	1	10442992
	7–A21	14.875	BELT, P/SEAT (RETR SI) (RED) ..	01–02	Y07–37 (AK5, AX4, 70I) (EXC C88) (EXPORT) ..	1	10443013
	7–A21	14.875	BELT, P/SEAT (RETR SI) (BLACK)	01–02	Y07–37 (AK5, AX4, 19I) (EXC C88) (EXPORT) ..	1	10443014
	7–A21	14.875	BELT, P/SEAT (RETR SI) (PEWTER)	01–02	Y07–37 (AK5, AX4, 92I) (EXC C88) (EXPORT) ..	1	10443015
	7–A21	14.875	BELT, P/SEAT (RETR SI) (OAK) ..	01–02	Y07–37 (AK5, AX4, 67I) (EXC C88) (EXPORT) ..	1	10443016
11.	7–A21	14.875	BOLT, D/SEAT SHLDR BELT GDE (BLACK) (8.900)	97–98	Y07 (AK5)	1	11516892
	7–A21	14.875	BOLT, D/SEAT SHLDR BELT GDE (BLACK) (8.900)	99–02	Y07–37 (AK5)	1	11516892
	7–A21	14.875	BOLT, P/SEAT SHLDR BELT GDE (BLACK) (8.900)	97–98	Y07	1	11516892
	7–A21	14.875	BOLT, P/SEAT SHLDR BELT GDE (BLACK) (8.900)	99–00	Y07–37	1	11516892
	7–A21	14.875	BOLT, P/SEAT SHLDR BELT GDE (BLACK) (8.900)	01–02	Y07–37 (AK5)	1	11516892
12.		N.S.	SEAT, DRVR (NTBP) (SEE GROUP 14 FOR SEAT DETAILS) .		.....		
		N.S.	SEAT, PASS (NTBP) (SEE GROUP 14 FOR SEAT DETAILS) .		.....		
13.	7–A21	14.875	NUT, D/SEAT BELT (BKL SI)	97–02	Y	1	25604879
	7–A21	14.875	NUT, P/SEAT BELT (BKL SI)	97–02	Y	1	25604879
14.	7–A21	14.875	BELT KIT, D/SEAT (BKL SI) (BLACK)	97–02	Y (19I)	1	12457501
	7–A21	14.875	BELT KIT, D/SEAT (BKL SI) (PEWTER)	97	Y (92I)	1	12457502
	7–A21	14.875	BELT KIT, D/SEAT (BKL SI) (RED)	97	Y (94I)	1	12457503
	7–A21	14.875	BELT KIT, D/SEAT (BKL SI) (PEWTER)	98–02	Y07–67 (92I)	1	12457502
	7–A21	14.875	BELT KIT, D/SEAT (BKL SI) (RED)	98–99	Y07–67 (94I)	1	12457503
	7–A21	14.875	BELT KIT, D/SEAT (BKL SI) (CAMEL)	98–02	Y07–67 (67I)	1	12457504
	7–A21	14.875	BELT KIT, D/SEAT (BKL SI) (RED)	00–02	Y07–67 (70I)	1	12457505
	7–A21	14.875	BELT KIT, P/SEAT (BKL SI) (BLACK)	97–02	Y (19I)	1	12458065
	7–A21	14.875	BELT KIT, P/SEAT (BKL SI) (PEWTER)	97	Y (92I)	1	12458478
	7–A21	14.875	BELT KIT, P/SEAT (BKL SI) (RED)	97–99	Y (94I)	1	12458479
	7–A21	14.875	BELT KIT, P/SEAT (BKL SI) (PEWTER)	98–02	Y07–67 (92I)	1	12458478
	7–A21	14.875	BELT KIT, P/SEAT (BKL SI) (CAMEL)	98–02	Y07–67 (67I)	1	12458480

cardiagn.com

	7–A21	14.875	BELT KIT, P/SEAT (BKL SI) (RED)	00–02	Y07–67 (70I)	1	12458481
15.	7–A21	14.875	COVER, D/SEAT SHLDR BELT GDE TR (BLACK)	97–98	Y07	1	10258492
	7–A21	14.875	COVER, D/SEAT SHLDR BELT GDE TR (BLACK)	99–02	Y07–37	1	10258492
	7–A21	14.875	COVER, P/SEAT SHLDR BELT GDE TR (BLACK)	97–98	Y07	1	10258492
	7–A21	14.875	COVER, P/SEAT SHLDR BELT GDE TR (BLACK)	99–02	Y07–37	1	10258492
16.	7–A21	14.875	EXTENSION KIT, ST BELT (BLACK) (9") (FOR BREED BELTS W/O PRESS ON RELEASE BUTTON) (TYPE 10) (REFER TO GMSPO INFORMATION BULLETIN ON SEAT BELT EXTENDERS FOR DETAILED INFORMATION)	97–02	Y	AR	12533427
	7–A21	14.875	EXTENSION KIT, ST BELT (BLACK) (15") (FOR BREED BELTS W/O PRESS ON RELEASE BUTTON) (TYPE 10) (REFER TO GMSPO INFORMATION BULLETIN ON SEAT BELT EXTENDERS FOR DETAILED INFORMATION)	97–02	Y	AR	12533428

RPO DEFINITIONS
AK5 – RESTRAINT SYSTEM,FRONT SEAT,INFLATABLE,DRIVER AND PASSENGER
AX4 – RESTRAINT SYSTEM,FRONT AND REAR SEAT,MANUAL(EUROPEAN)
C88 – SWITCH INFL RST I/P MDL MAN SUPPRESSION – – DELETE
19I – INTERIOR TRIM,BLACK
67I – INTERIOR TRIM,CAMEL
70I – INTERIOR TRIM,TORCH RED
92I – INTERIOR TRIM SHALE/PEWTER
94I – INTERIOR TRIM FIRETHORN RED (97)

cardiagn.com

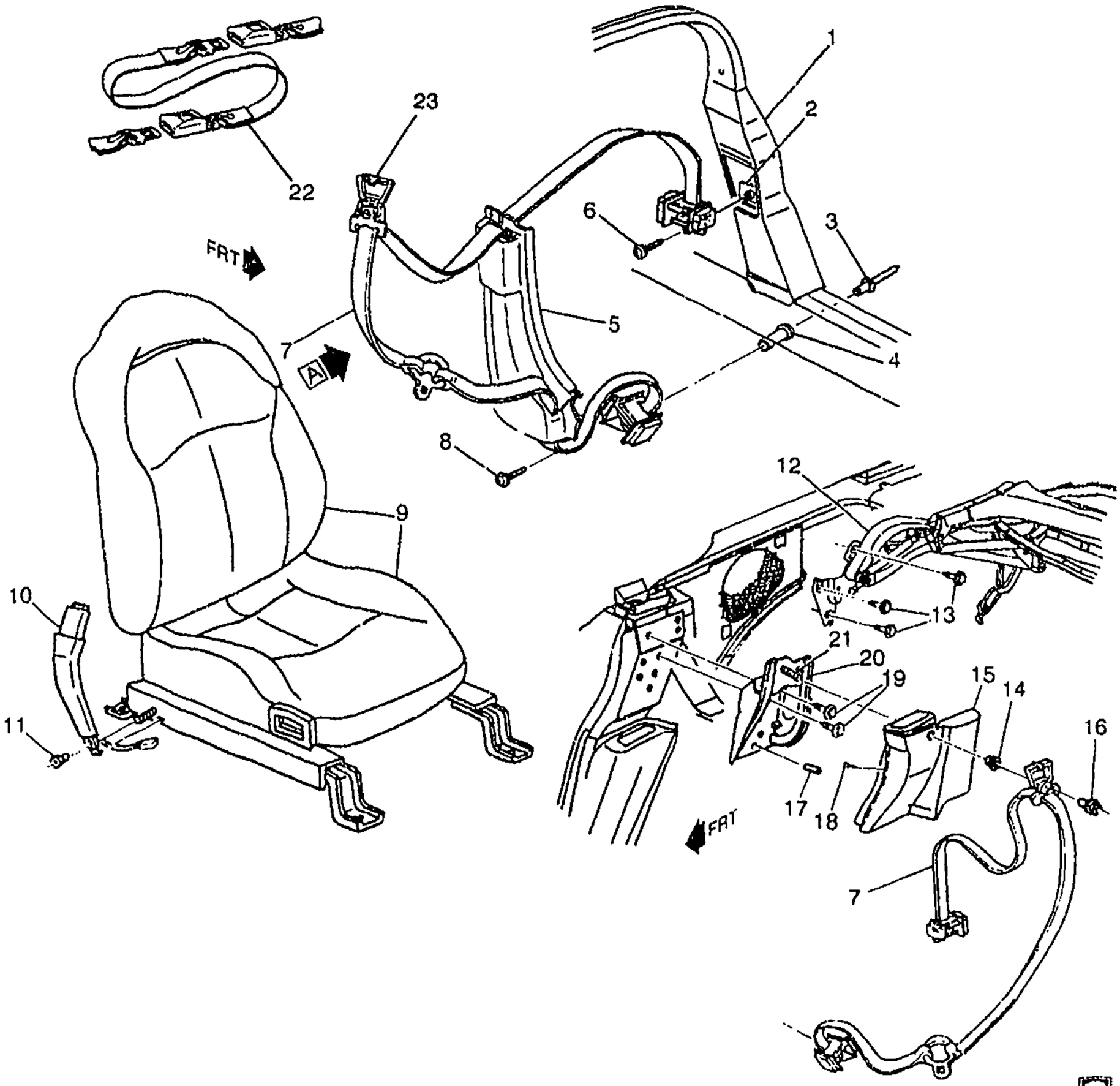

1Y14-026

1998-2002 Y67 SEAT BELT HARDWARE

1.	7-N24	12.944	PANEL, BODY L/PLR INR	98-02	Y67	RH	12458930
	7-N24	12.944	PANEL, BODY L/PLR INR	98-02	Y67	LH	12458931
2.	7-A21	14.875	PLATE, P/SEAT BELT RETR ANC (OVAL) (16.714)	98-02	Y	2	15734139
	7-A21	14.875	PLATE, D/SEAT BELT ANC (BKL SI) (OVAL) (16.714)	98-02	Y	2	15734139
3.		8.967	RIVET, POP, 3/16X.375 SHANK, .562 OD DOME, SELF PLUG, AL, PL, .047-.078 GRP (P/ST BELT RETR ANC PLT)	98-02	.....	2	9442468

cardiagn.com

		8.967	RIVET, POP, 3/16X.375 SHANK, .562 OD DC ME, SELF PLUG, AL, PL, .047–.078 GRP (D/ST BELT RETR ANC PLT)	98–02	.....	2	9442468
4.	7–A21	14.875	PLATE, P/SEAT BELT RETR ANC	98–02	Y (AK5)	1	10403689
	7–A21	14.875	PLATE, D/SEAT BELT RETR ANC	98–02	Y (AK5)	1	10403689
5.	7–A9	14.731	PANEL, BODY L/PLR TR (BLACK)	98–00	Y (19I)	LH	10258547
	7–A9	14.731	PANEL, BODY L/PLR TR (RED) ..	98–99	Y (94I)	LH	10272395
	7–A9	14.731	PANEL, BODY L/PLR TR (BLACK)	98–00	Y (19I)	RH	10426020
	7–A9	14.731	PANEL, BODY L/PLR TR (RED) ..	98–99	Y (94I)	RH	10426024
	7–A9	14.731	PANEL, BODY L/PLR TR (PEWTER)	98–02	Y07–67 (92I)	RH	10272394
	7–A9	14.731	PANEL, BODY L/PLR TR (CAMEL)	98–02	Y07–67 (67I)	LH	10285246
	7–A9	14.731	PANEL, BODY L/PLR TR (PEWTER)	98–02	Y07–67 (92I)	LH	10426021
	7–A9	14.731	PANEL, BODY L/PLR TR (CAMEL)	98–02	Y07–67 (67I)	RH	10426026
	7–A9	14.731	PANEL, BODY L/PLR TR (RED) ..	00	Y (70I)	LH	10426027
	7–A9	14.731	PANEL, BODY L/PLR TR (RED) ..	00	Y (70I)	RH	10426028
	7–A9	14.731	PANEL, BODY L/PLR TR (BLACK)	01–02	YY07–67 (19I)	LH	10258547
	7–A9	14.731	PANEL, BODY L/PLR TR (BLACK)	01–02	YY07–67 (19I)	RH	10426020
	7–A9	14.731	PANEL, BODY L/PLR TR (RED) ..	01–02	YY07–67 (70I)	LH	10426027
	7–A9	14.731	PANEL, BODY L/PLR TR (RED) ..	01–02	YY07–67 (70I)	RH	10426028
6.	7–A21	14.875	BOLT, P/SEAT BELT (RETR SI) (M12 X 1.75 X 30)	98–02	Y (AK5)	1	20247145
	7–A21	14.875	BOLT, D/SEAT BELT (RETR SI) (M12 X 1.75 X 30)	98–02	Y (AK5)	1	20247145
7.	7–A21	14.875	BELT KIT, P/SEAT (RETR SI) (BLACK)	98–99	Y67 (AK5, 19I) (EXC AX4)	1	88893521
	7–A21	14.875	BELT KIT, P/SEAT (RETR SI) (PEWTER)	98–99	Y67 (AK5, 92I) (EXC AX4)	1	88893522
	7–A21	14.875	BELT KIT, P/SEAT (RETR SI) (RED)	98–00	Y67 (AK5, 94I) (EXC AX4)	1	88894739
	7–A21	14.875	BELT KIT, P/SEAT (RETR SI) (USED ON VEHICLES PRIOR TO VIN #1G1YY22G7Y5119656)	00	Y67 (AK5, 70I) (EXC AX4) (1ST DES)	1	88893520
	7–A21	14.875	BELT KIT, P/SEAT (RETR SI) (BLACK) (USED ON VEHICLES PRIOR TO VIN #1G1YY22G7Y5119656)	00	Y67 (AK5, 19I) (EXC AX4) (1ST DES)	1	88893521
	7–A21	14.875	BELT KIT, P/SEAT (RETR SI) (PEWTER) (USED ON VEHICLES PRIOR TO VIN #1G1YY22G7Y5119656)	00	Y67 (AK5, 92I) (EXC AX4) (1ST DES)	1	88893522
	7–A21	14.875	BELT KIT, P/SEAT (RETR SI) (RED) (USED ON VEHICLES W/VIN #1G1YY22G7Y5119656 AND FUTURE)	00	Y67 (AK5, 70I) (EXC AX4) (2ND DES)	1	88895176
	7–A21	14.875	BELT KIT, P/SEAT (RETR SI) (BLACK) (USED ON VEHICLES W/VIN #1G1YY22G7Y5119656 AND FUTURE)	00	Y67 (AK5, 19I) (EXC AX4) (2ND DES)	1	88895177
	7–A21	14.875	BELT KIT, P/SEAT (RETR SI) (PEWTER) (USED ON VEHICLES W/VIN #1G1YY22G7Y5119656 AND FUTURE)	00	Y67 (AK5, 92I) (EXC AX4) (2ND DES)	1	88895178

cardiagn.com

7–A21	14.875	BELT KIT, P/SEAT (RETR SI) (OAK) (USED ON VEHICLES W/VIN #1G1YY22G7Y5119656 AND FUTURE)	00	Y67 (AK5, 67I) (EXC AX4) (2ND DES)	1	88895179
7–A21	14.875	BELT KIT, P/SEAT (RETR SI) (RED)	01–02	Y67 (AK5, 70I) (EXC AX4, C88)	1	88895176
7–A21	14.875	BELT KIT, P/SEAT (RETR SI) (BLACK)	01–02	Y67 (AK5, 19I) (EXC AX4)	1	88895177
7–A21	14.875	BELT KIT, P/SEAT (RETR SI) (PEWTER)	01–02	Y67 (AK5, 92I) (EXC AX4, C88)	1	88895178
7–A21	14.875	BELT KIT, P/SEAT (RETR SI) (OAK)	01–02	Y67 (AK5, 67I) (EXC AX4, C88)	1	88895179
7–A21	14.875	BELT KIT, D/SEAT (RETR SI)	98–99	Y67 (AK5, 19I) (EXC AX4)	1	88893517
7–A21	14.875	BELT KIT, D/SEAT (RETR SI) (RED)	98–00	Y67 (AK5, 94I) (EXC AX4)	1	88894737
7–A21	14.875	BELT KIT, D/SEAT (RETR SI)	00	Y67 (AK5, 70I) (EXC AX4) (1ST DES)	1	88893516
7–A21	14.875	BELT KIT, D/SEAT (RETR SI) (USED ON VEHICLES PRIOR TO VIN #1G1YY22G7Y5119656, FOR 2ND DES SEE 88895169)	00	Y67 (AK5, 19I) (EXC AX4) (1ST DES)	1	88893517
7–A21	14.875	BELT KIT, D/SEAT (RETR SI) (RED) (USED ON VEHICLES W/VIN #1G1YY22G7Y5119656 AND FUTURE)	00	Y67 (AK5, 70I) (EXC AX4) (2ND DES)	1	88895168
7–A21	14.875	BELT KIT, D/SEAT (RETR SI) (BLACK) (USED ON VEHICLES W/VIN #1G1YY22G7Y5119656 AND FUTURE)	00	Y67 (AK5, 19I) (EXC AX4) (2ND DES)	1	88895169
7–A21	14.875	BELT KIT, D/SEAT (RETR SI) (PEWTER) (USED ON VEHICLES W/VIN #1G1YY22G7Y5119656 AND FUTURE)	00	Y67 (AK5, 92I) (EXC AX4) (2ND DES)	1	88895170
7–A21	14.875	BELT KIT, D/SEAT (RETR SI) (OAK) (USED ON VEHICLES W/VIN #1G1YY22G7Y5119656 AND FUTURE)	00	Y67 (AK5, 67I) (EXC AX4) (2ND DES)	1	88895171
7–A21	14.875	BELT KIT, D/SEAT (RETR SI) (RED)	01–02	Y67 (AK5, 70I) (EXC AX4)	1	88895168
7–A21	14.875	BELT KIT, D/SEAT (RETR SI) (BLACK)	01–02	Y67 (AK5, 19I) (EXC AX4)	1	88895169
7–A21	14.875	BELT KIT, D/SEAT (RETR SI) (PEWTER)	01–02	Y67 (AK5, 92I) (EXC AX4)	1	88895170
7–A21	14.875	BELT KIT, D/SEAT (RETR SI) (OAK)	01–02	Y67 (AK5, 67I) (EXC AX4)	1	88895171
7–A21	14.875	BELT, P/SEAT (RETR SI) (CAMEL)	98–99	Y67 (AK5 67I) (EXC AX4)	1	88893523
7–A21	14.875	BELT, P/SEAT (RETR SI) (CAMEL) (USED ON VEHICLES PRIOR TO VIN #1G1YY22G7Y5119656)	00	Y67 (AK5, 67I) (EXC AX4) (1ST DES)	1	88893523
7–A21	14.875	BELT, D/SEAT (RETR SI) (PEWTER)	98–99	Y67 (AK5, 92I) (EXC AX4)	1	88893518
7–A21	14.875	BELT, D/SEAT (RETR SI)	98–99	Y67 (AK5, 67I) (EXC AX4)	1	88893519

cardiagn.com

7–A21	14.875	BELT, D/SEAT (RETR SI) (PEWTER) (USED ON VEHICLES PRIOR TO VIN #1G1YY22G7Y5119656, FOR 2ND DES SEE 88895170)	00	Y67 (AK5, 92I) (EXC AX4) (1ST DES)	1	88893518
7–A21	14.875	BELT, D/SEAT (RETR SI)	00	Y67 (AK5, 67I) (EXC AX4) (1ST DES)	1	88893519
7–A21	14.875	BELT, P/SEAT (RETR SI) (BLACK)	98–99	Y67 (AK5, AX4, 19I) (EXPORT)	1	10434574
7–A21	14.875	BELT, P/SEAT (RETR SI) (PEWTER)	98–99	Y67 (AK5, AX4, 92I) (EXPORT)	1	10434575
7–A21	14.875	BELT, P/SEAT (RETR SI) (OAK) ..	98–99	Y67 (AK5, AX4, 67I) (EXPORT)	1	10434576
7–A21	14.875	BELT, P/SEAT (RETR SI) (RED) ..	98–00	Y67 (AK5, AX4, 94I) (EXPORT)	1	10443589
7–A21	14.875	BELT, P/SEAT (RETR SI) (RED) (USED ON VEHICLES PRIOR TO VIN #1G1YY22G7Y5119656)	00	Y67 (AK5, AX4, 70I) (1ST DES) (EXPORT) ..	1	10434573
7–A21	14.875	BELT, P/SEAT (RETR SI) (BLACK)	00	Y67 (AK5, AX4, 19I) (1ST DES) (EXPORT) ..	1	10434574
7–A21	14.875	BELT, P/SEAT (RETR SI) (PEWTER) (USED ON VEHICLES PRIOR TO VIN #1G1YY22G7Y5119656)	00	Y67 (AK5, AX4, 92I) (1ST DES) (EXPORT) ..	1	10434575
7–A21	14.875	BELT, P/SEAT (RETR SI) (OAK) (USED ON VEHICLES PRIOR TO VIN #1G1YY22G7Y5119656)	00	Y67 (AK5, AX4, 67I) (1ST DES) (EXPORT) ..	1	10434576
7–A21	14.875	BELT, P/SEAT (RETR SI) (RED) ..	00–02	Y67 (AK5, C88, 70I) (EXC AX4) (EXPORT) ..	1	10441509
7–A21	14.875	BELT, P/SEAT (RETR SI) (BLACK)	00–02	Y67 (AK5, C88, 19I) (EXC AX4) (EXPORT) ..	1	10441510
7–A21	14.875	BELT, P/SEAT (RETR SI) (PEWTER)	00–02	Y67 (AK5, C88, 92I) (EXC AX4) (EXPORT) ..	1	10441511
7–A21	14.875	BELT, P/SEAT (RETR SI) (OAK) ..	00–02	Y67 (AK5, C88, 67I) (EXC AX4) (EXPORT) ..	1	10441512
7–A21	14.875	BELT, P/SEAT (RETR SI) (RED) (USED ON VEHICLES W/VIN #1G1YY22G7Y5119650 AND FUTURE)	00	Y67 (AK5, AX4, 70I) (2ND DES) (EXPORT) ..	1	10443013
7–A21	14.875	BELT, P/SEAT (RETR SI) (BLACK) (USED ON VEHICLES W/VIN #1G1YY22G7Y5119656 AND FUTURE)	00	Y67 (AK5, AX4, 19I) (2ND DES) (EXPORT) ..	1	10443014
7–A21	14.875	BELT, P/SEAT (RETR SI) (PEWTER) (USED ON VEHICLES W/VIN #1G1YY22G7Y5119656 AND FUTURE)	00	Y67 (AK5, AX4, 92I) (2ND DES) (EXPORT) ..	1	10443015
7–A21	14.875	BELT, P/SEAT (RETR SI) (OAK) (USED ON VEHICLES W/VIN #1G1YY22G7Y5119656 AND FUTURE)	00	Y67 (AK5, AX4, 67I) (2ND DES) (EXPORT) .	1	10443016
7–A21	14.875	BELT, P/SEAT (RETR SI) (RED) ..	01–02	Y67 (AK5, AX4, 70I) (EXC C88) (EXPORT) ..	1	10442989
7–A21	14.875	BELT, P/SEAT (RETR SI) (BLACK)	01–02	Y67 (AK5, AX4, 19I) (EXC C88) (EXPORT) ..	1	10442990
7–A21	14.875	BELT, P/SEAT (RETR SI) (PEWTER)	01–02	Y67 (AK5, AX4, 92I) (EXC C88) (EXPORT) ..	1	10442991
7–A21	14.875	BELT, D/SEAT (RETR SI) (BLACK)	98–99	Y67 (AK5, AX4, 19I) (EXPORT)	1	10434447

cardiagn.com

	7–A21	14.875	BELT, D/SEAT (RETR SI)	98–99	Y67 (AK5, AX4, 92I) (EXPORT)	1	10434448
	7–A21	14.875	BELT, D/SEAT (RETR SI)	98–99	Y67 (AK5, AX4, 67I) (EXPORT)	1	10434449
	7–A21	14.875	BELT, D/SEAT (RETR SI) (RED) ..	98–00	Y67 (AK5, AX4, 94I) (EXPORT)	1	10443583
	7–A21	14.875	BELT, D/SEAT (RETR SI) (USED ON VEHICLES PRIOR TO VIN #1G1YY22G7Y5119656)	00	Y67 (AK5, AX4, 70I) (1ST DES) (EXPORT) ..	1	10434446
	7–A21	14.875	BELT, D/SEAT (RETR SI) (BLACK) (USED ON VEHICLES PRIOR TO VIN #1G1YY22G7Y5119656)	00	Y67 (AK5, AX4, 19I) (1ST DES) (EXPORT) ..	1	10434447
	7–A21	14.875	BELT, D/SEAT (RETR SI) (USED ON VEHICLES PRIOR TO VIN #1G1YY22G7Y5119656)	00	Y67 (AK5, AX4, 92I) (1ST DES) (EXPORT) ..	1	10434448
	7–A21	14.875	BELT, D/SEAT (RETR SI) (USED ON VEHICLES PRIOR TO VIN #1G1YY22G7Y5119656)	00	Y67 (AK5, AX4, 67I) (1ST DES) (EXPORT) ..	1	10434449
	7–A21	14.875	BELT, D/SEAT (RETR SI) (RED) (USED ON VEHICLES W/VIN #1G1YY22G7Y5119656 AND FUTURE)	00	Y67 (AK5, AX4, 70I) (2ND DES) (EXPORT) ..	1	10442984
	7–A21	14.875	BELT, D/SEAT (RETR SI) (BLACK) (USED ON VEHICLES W/VIN #1G1YY22G7Y5119656 AND FUTURE)	00	Y67 (AK5, AX4, 19I) (2ND DES) (EXPORT) ..	1	10442985
	7–A21	14.875	BELT, D/SEAT (RETR SI) (PEWTER) (USED ON VEHICLES W/VIN #1G1YY22G7Y5119656 AND FUTURE)	00	Y67 (AK5, AX4, 92I) (2ND DES) (EXPORT) ..	1	10442986
	7–A21	14.875	BELT, D/SEAT (RETR SI) (OAK) (USED ON VEHICLES W/VIN #1G1YY22G7Y5119656 AND FUTURE)	00	Y67 (AK5, AX4, 67I) (2ND DES) (EXPORT) ..	1	10442987
	7–A21	14.875	BELT, D/SEAT (RETR SI) (RED) ..	01–02	Y67 (AK5, AX4, 70I) (EXPORT)	1	10442984
	7–A21	14.875	BELT, D/SEAT (RETR SI) (BLACK)	01–02	Y67 (AK5, AX4, 19I) (EXPORT)	1	10442985
	7–A21	14.875	BELT, D/SEAT (RETR SI) (PEWTER)	01–02	Y67 (AK5, AX4, 92I) (EXPORT)	1	10442986
	7–A21	14.875	BELT, D/SEAT (RETR SI) (OAK) ..	01–02	Y67 (AK5, AX4, 67I) (EXPORT)	1	10442987
8.	7–A21	14.875	BOLT, P/SEAT BELT RETR (M12 X 1.75 X 30)	98–02	Y (AK5)	1	20247145
	7–A21	14.875	BOLT, D/SEAT BELT RETR (M12 X 1.75 X 30)	98–02	Y (AK5)	1	20247145
9.		N.S.	SEAT, PASS (NTBP) (SEE GROUP 14 FOR SEAT DETAILS) .		.. ..		
		N.S.	SEAT, DRVR (NTBP) (SEE GROUP 14 FOR SEAT DETAILS) .		.....		
10.	7–A21	14.875	BELT KIT, P/SEAT (BKL SI) (BLACK)	98–02	Y (19I)	1	12458065
	7–A21	14.875	BELT KIT, P/SEAT (BKL SI) (RED)	98–99	Y (94I)	1	12453479
	7–A21	14.875	BELT KIT, P/SEAT (BKL SI) (PEWTER)	98–02	Y07–67 (92I)	1	12458478
	7–A21	14.875	BELT KIT, P/SEAT (BKL SI) (CAMEL)	98–02	Y07–67 (67I)	1	12458480
	7–A21	14.875	BELT KIT, P/SEAT (BKL SI) (RED)	00–02	Y07–67 (70I)	1	12458481

cardiagn.com

	7–A21	14.875	BELT KIT, D/SEAT (BKL SI) (BLACK)	98–02	Y (19I)	1	12457501
	7–A21	14.875	BELT KIT, D/SEAT (BKL SI) (PEWTER)	98–02	Y07–67 (92I)	1	12457502
	7–A21	14.875	BELT KIT, D/SEAT (BKL SI) (RED)	98–99	Y07–67 (94I)	1	12457503
	7–A21	14.875	BELT KIT, D/SEAT (BKL SI) (CAMEL)	98–02	Y07–67 (67I)	1	12457504
	7–A21	14.875	BELT KIT, D/SEAT (BKL SI) (RED)	00–02	Y07–67 (70I)	1	12457505
11.	7–A21	14.875	NUT, P/SEAT BELT (BKL SI)	98–02	Y	1	25604879
	7–A21	14.875	NUT, D/SEAT BELT (BKL SI)	98–02	Y	1	25604879
12.	7–N28	13.346	TOP, FLDG (CPS) (SEE GROUP 14 FOR DETAILS) (BLACK)	98–00	Y67 (C05, 41T)	1	10445454
	7–N28	13.346	TOP, FLDG (CPS) (SEE GROUP 14 FOR DETAILS) (BLACK)	01–02	Y67 (C05, 41T)	1	10306244
	7–N28	13.346	TOP, FLDG (CPS) (SEE GROUP 14 FOR DETAILS) (METALLIC)	01–02	Y67 (C05, 67T)	1	10306245
	7–N28	13.346	TOP, FLDG (CPS) (SEE GROUP 14 FOR DETAILS) (WHITE)	01–02	Y67 (C05, 16T)	1	10306246
13.		8.900	BOLT–HEX, M8X1.25X30, 22 THD, 24MM OD, 9.8, 7114M (F/TOP PIV BRKT)	98–02		6	11516594
14.	7–A7	14.645	SPACER, QTR UPR T/PNL	98–02	Y67	2	10408633
15.	7–A9	14.731	PANEL, BODY L/PLR UPR TR (BLACK)	98–02	Y67	LH	10418408
	7–A9	14.731	PANEL, BODY L/PLR UPR TR (BLACK)	98–02	Y67	RH	10418409
16.	7–A21	14.875	NUT, P/SEAT SHLDR BELT GDE (M10.0X1.50THD)	98–02	Y67	1	10201699
	7–A21	14.875	NUT, D/SEAT SHLDR BELT GDE (M10.0X1.50THD)	98–02	Y67	1	10201699
17.	7–A6	14.310	PIN, F/TOP PIV BRKT LOC	98–02	Y67	2	10293227
18.	7–A9	14.731	BOLT, BODY L/PLR UPR T/PNL (14MM SHLDR SCR)	98–02	Y67	2	10296863
19.		8.900	BOLT–HEX, M8X1.25X30, 22 THD, 24MM OD, 9.8, 7114M (P/ST SHLDR BELT GDE BRKT)	98–02		2	11516594
		8.900	BOLT–HEX, M8X1.25X30, 22 THD, 24MM OD, 9.8, 7114M (D/ST SHLDR BELT GDE BRKT)	98–02		2	11516594
20.	7–A21	14.875	BRACKET, P/SEAT SHLDR BELT GDE (INCLS 21)	98–02	Y67	1	10402807
	7–A21	14.875	BRACKET, D/SEAT SHLDR BELT GDE (INCLS 21)	98–02	Y67	1	10402798
21.		N.S.	STUD, P/SEAT SHLDR BELT GDE BRKT (PART OF 20)			1	
		N.S.	STUD, D/SEAT SHLDR BELT GDE BRKT (PART OF 20)			1	
22.	7–A21	14.875	EXTENSION KIT, ST BELT (BLACK) (9") (FOR BREED BELTS W/O PRESS ON RELEASE BUTTON) (TYPE 10) (REFER TO GMSPO INFORMATION BULLETIN ON SEAT BELT EXTENDERS FOR DETAILED INFORMATION)	98–02	Y	AR	12533427

cardiagn.com

	7-A21	14.875	EXTENSION KIT, ST BELT (BLACK) (15") (FOR BREED BELTS W/O PRESS ON RELEASE BUTTON) (TYPE 10) (REFER TO GMSPO INFORMATION BULLETIN ON SEAT BELT EXTENDERS FOR DETAILED INFORMATION)	98-02	Y	AR	12533428
23.	7-A21	14.875	COVER, D/SEAT SHLDR BELT GDE TR	98-02	Y67 (AK5) (EXC AX4) ..	1	10288297
	7-A21	14.875	COVER, P/SEAT SHLDR BELT GDE TR	98-02	Y67 (AK5) (EXC AX4) ..	1	10288297

RPO DEFINITIONS
AK5 – RESTRAINT SYSTEM,FRONT SEAT,INFLATABLE,DRIVER AND PASSENGER
AX4 – RESTRAINT SYSTEM,FRONT AND REAR SEAT,MANUAL(EUROPEAN)
C05 – ROOF,CONVERTIBLE,FOLDING
C68 – SWITCH INFL RST I/P MDL MAN SUPPRESSION -- DELETE
16T – TOP COLOR BRITE WHITE (94)
19I – INTERIOR TRIM,BLACK
41T – VINYL TOP COLOR,BLACK
67I – INTERIOR TRIM,CAMEL
67T – VINYL TOP COLOR,DARK ANTELOPE METALLIC
70I – INTERIOR TRIM,TORCH RED
92I – INTERIOR TRIM SHALE/PEWTER
94I – INTERIOR TRIM FIRETHORN RED (97)

cardiagn.com

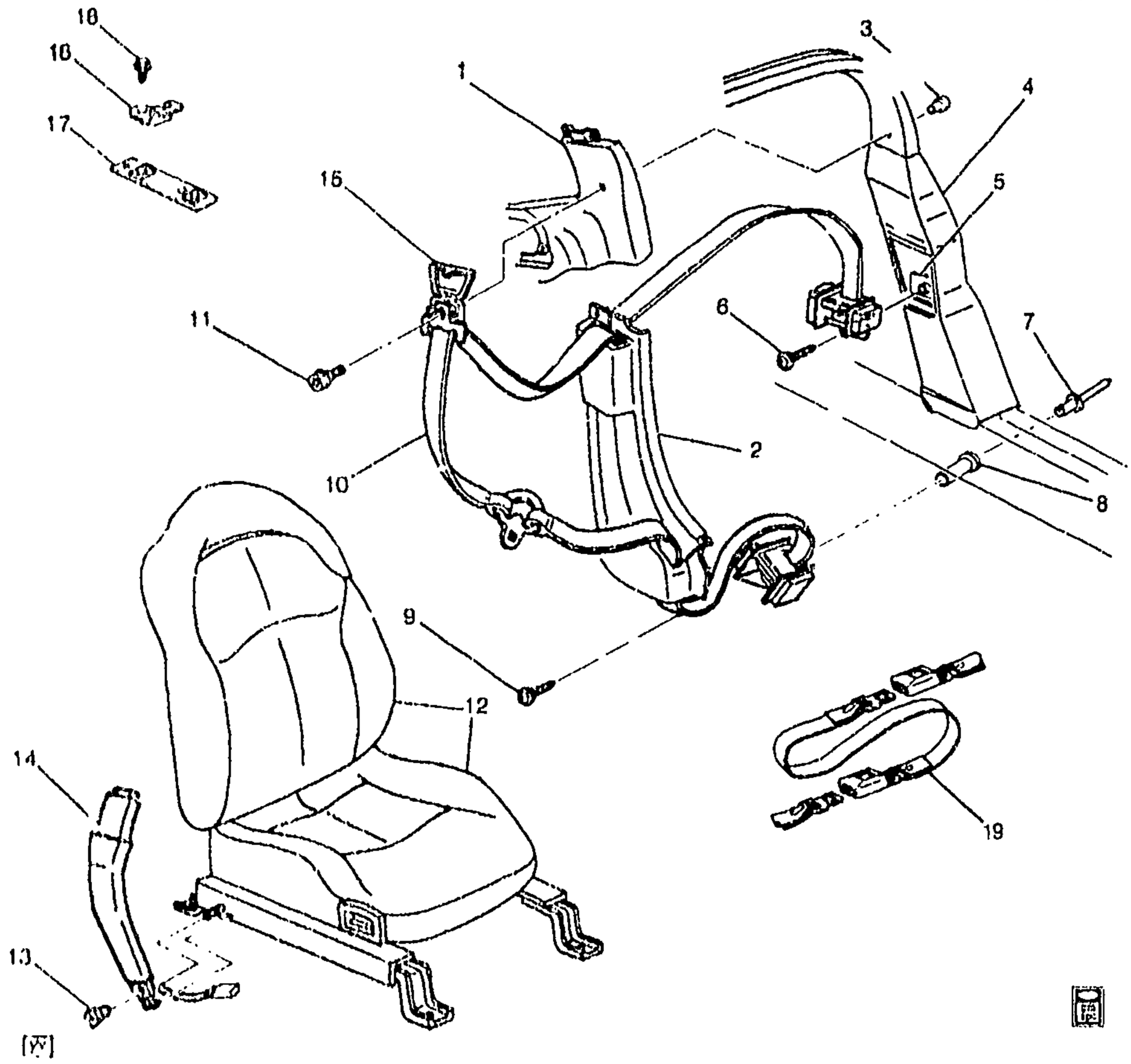

1Y14-033

1999-2002 Y37 SEAT BELT HARDWARE

1.	7-C6	18.100	PANEL, BODY SI TR (BLACK) ...	99-02	Y37	RH	10258568
	7-C6	18.100	PANEL, BODY SI TR ((BLACK)) ..	99-02	Y37	LH	10258567
2.	7-A9	14.731	PANEL, BODY L/PLR TR (BLACK)	99-00	Y (19I)	LH	10258547
	7-A9	14.731	PANEL, BODY L/PLR TR (RED) ..	99	Y (94I)	LH	10272395
	7-A9	14.731	PANEL, BODY L/PLR TR (BLACK)	99-00	Y (19I)	RH	10426020
	7-A9	14.731	PANEL, BODY L/PLR TR (RED) ..	99	Y (94I)	RH	10426024
	7-A9	14.731	PANEL, BODY L/PLR TR (RED) ..	00	Y (70I)	LH	10426027
	7-A9	14.731	PANEL, BODY L/PLR TR (RED) ..	00	Y (70I)	RH	10426028
	7-A9	14.731	PANEL, BODY L/PLR TR (BLACK)	01-02	YY37 (19I, 70I)	LH	10258547
	7-A9	14.731	PANEL, BODY L/PLR TR (BLACK)	01-02	YY37 (19I, 70I)	RH	10426020
3.		N.S.	NUT, D/SEAT SHLDR BELT GDE .		.....		
		N.S.	NUT, P/SEAT SHLDR BELT GDE .		.....		

cardiagn.com

							1Y14-033
4.	7-N24	12.944	PANEL, BODY L/PLR INR (#55) (12.942)	99-02	Y07-37	LH	12458933
	7-N24	12.944	PANEL, BODY L/PLR INR (#55) (12.942)	99-02	Y07-37	RH	12458932
5.	7-A21	14.875	PLATE, D/SEAT BELT ANC (BKL SI) (OVAL) (16.714)	99-02	Y	1	15734139
	7-A21	14.875	PLATE, P/SEAT BELT RETR ANC (OVAL) (16.714)	99-02	Y	1	15734139
6.	7-A21	14.875	BOLT, D/SEAT BELT (RETR SI) (M12 X 1.75 X 30)	99-02	Y (AK5)	1	20247145
	7-A21	14.875	BOLT, P/SEAT BELT (RETR SI) (M12 X 1.75 X 30)	99-02	Y (AK5)	1	20247145
7.		8.967	RIVET, POP, 3/16X.375 SHANK, .562 OD DOME, SELF PLUG, AL, PL, .047-.078 GRP (D/ST BELT RETR ANC PLT)	99-02		2	9442468
		8.967	RIVET, POP, 3/16X.375 SHANK, .562 OD DOME, SELF PLUG, AL, PL, .047-.078 GRP (P/ST BELT RETR ANC PLT)	99-02		2	9442468
8.	7-A21	14.875	PLATE, D/SEAT BELT RETR ANC	99-02	Y (AK5)	1	10403689
	7-A21	14.875	PLATE, P/SEAT BELT RETR ANC	99-02	Y (AK5)	1	10403689
9.	7-A21	14.875	BOLT, D/SEAT BELT RETR (M12 X 1.75 X 30)	99-02	Y (AK5)	1	20247145
	7-A21	14.875	BOLT, P/SEAT BELT RETR (M12 X 1.75 X 30)	99-02	Y (AK5)	1	20247145
10.	7-A21	14.875	BELT KIT, D/SEAT (RETR SI)	99	Y07-37 (AK5, 19I) (EXC AX4)	1	88893509
	7-A21	14.875	BELT KIT, D/SEAT (RETR SI)	99	Y07-37 (AK5, 92I) (EXC AX4)	1	88893510
	7-A21	14.875	BELT KIT, D/SEAT (RETR SI) (RED)	99	Y37 (AK5, 94I) (EXC AX4)	1	88894736
	7-A21	14.875	BELT KIT, D/SEAT (RETR SI) (USED ON VEHICLES PRIOR TO VIN #1G1YY22G7Y5119656)	00	Y07-37 (AK5, 70I) (EXC AX4) (1ST DES)	1	88893508
	7-A21	14.875	BELT KIT, D/SEAT (RETR SI) (USE ON VEHICLES PRIOR TO VIN #1G1YY22G7Y5119656)	00	Y07-37 (AK5, 19I) (EXC AX4) (1ST DES)	1	88893509
	7-A21	14.875	BELT KIT, D/SEAT (RETR SI)	00	Y07-37 (AK5, 92I) (EXC AX4) (1ST DES)	1	88893510
	7-A21	14.875	BELT KIT, D/SEAT (RETR SI) (RED)	00	Y07-37 (AK5, 94I) (EXC AX4)	1	88894736
	7-A21	14.875	BELT KIT, D/SEAT (RETR SI) (RED) (USED ON VEHICLES W/VIN #1G1YY22G7Y5119656 AND FUTURE)	00	Y07-37 (AK5, 70I) (EXC AX4) (2ND DES)	1	88895164
	7-A21	14.875	BELT KIT, D/SEAT (RETR SI) (BLACK) (USED ON VEHICLES W/VIN #1G1YY22G7Y5119656 AND FUTURE)	00	Y07-37 (AK5, 19I) (EXC AX4) (2ND DES)	1	88895165
	7-A21	14.875	BELT KIT, D/SEAT (RETR SI) (PEWTER) (USED ON VEHICLES W/VIN #1G1YY22G7Y5119656 AND FUTURE)	00	Y07-37 (AK5, 92I) (EXC AX4) (2ND DES)	1	88895166
	7-A21	14.875	BELT KIT, D/SEAT (RETR SI) (BLACK)	01-02	Y37 (AK5, 19I, 70I)	1	88895165
	7-A21	14.875	BELT KIT, P/SEAT (RETR SI)	99	Y07-37 (AK5, 19I) (EXC AX4)	1	88893513

cardiagn.com

						1Y14-033
7-A21	14.875	BELT KIT, P/SEAT (RETR SI)	99	Y07-37 (AK5, 92I) (EXC AX4)	1	88893514
7-A21	14.875	BELT KIT, P/SEAT (RETR SI) (RED)	99	Y37 (AK5, 94I) (EXC AX4)	1	88894738
7-A21	14.875	BELT KIT, P/SEAT (RETR SI) (USED ON VEHICLES PRIOR TO VIN #1G1YY22G7Y5119656)	00	Y07-37 (AK5, 19I) (EXC AX4) (1ST DES) ..	1	88893513
7-A21	14.875	BELT KIT, P/SEAT (RETR SI) (USED ON VEHICLES PRIOR TO VIN #1G1YY22G7Y5119656)	00	Y07-37 (AK5, 92I) (EXC AX4) (1ST DES) ..	1	88893514
7-A21	14.875	BELT KIT, P/SEAT (RETR SI) (RED)	00	Y07-37 (AK5, 94I) (EXC AX4)	1	88894738
7-A21	14.875	BELT KIT, P/SEAT (RETR SI) (BLACK) (USED ON VEHICLES W/VIN #1G1YY22G7Y5119656 AND FUTURE)	00	Y07-37 (AK5, 19I) (EXC AX4) (2ND DES) .	1	88895173
7-A21	14.875	BELT KIT, P/SEAT (RETR SI) (PEWTER) (USED ON VEHICLES W/VIN #1G1YY22G7Y5119656 AND FUTURE)	00	Y07-37 (AK5, 92I) (EXC AX4) (2ND DES) .	1	88895174
7-A21	14.875	BELT KIT, P/SEAT (RETR SI) (BLACK)	01-02	Y07-37 (AK5, 19I) (EXC AX4, C68)	1	88895173
7-A21	14.875	BELT, D/SEAT (RETR SI) (BLACK)	99	Y07-37 (AK5, AX4, 19I) (EXPORT)	1	10434373
7-A21	14.875	BELT, D/SEAT (RETR SI) (PEWTER)	99	Y37 (AK5, AX4, 92I) (EXPORT)	1	10434374
7-A21	14.875	BELT, D/SEAT (RETR SI) (RED) ..	99-00	Y37 (AK5, AX4, 94I) (EXPORT)	1	10443585
7-A21	14.875	BELT, D/SEAT (RETR SI) (BLACK) (USED ON VEHICLES PRIOR TO VIN #1G1YY22G7Y5119656)	00	Y07-37 (AK5, AX4, 19I) (1ST DES) (EXPORT) ..	1	10434373
7-A21	14.875	BELT, D/SEAT (RETR SI) (BLACK) (USED ON VEHICLES W/VIN #1G1YY22G7Y5119656 AND FUTURE)	00	Y07-37 (AK5, AX4, 19I) (2ND DES) (EXPORT) ..	1	10442978
7-A21	14.875	BELT, D/SEAT (RETR SI) (PEWTER)	01-02	Y07-37 (AK5, AX4, 92I) (EXPORT)	1	10442979
7-A21	14.875	BELT, D/SEAT (RETR SI) (OAK) ..	01-02	Y07-37 (AK5, AX4, 67I) (EXPORT)	1	10442980
7-A21	14.875	BELT, P/SEAT (RETR SI) (RED) ..	99-00	Y37 (AK5, AX4, 94I) (EXPORT)	1	10443591
7-A21	14.875	BELT, P/SEAT (RETR SI) (BLACK)	99	Y07-37 (AK5, AX4, 19I) (EXPORT)	1	10434539
7-A21	14.875	BELT, P/SEAT (RETR SI) (PEWTER)	99	Y07-37 (AK5, AX4, 92I) (EXPORT)	1	10434540
7-A21	14.875	BELT, P/SEAT (RETR SI) (BLACK) (USED ON VEHICLES PRIOR TO VIN #1G1YY22G7Y5119656)	00	Y07-37 (AK5, AX4, 19I) (1ST DES) (EXPORT) ..	1	10434539
7-A21	14.875	BELT, P/SEAT (RETR SI) (PEWTER) (USED ON VEHICLES PRIOR TO VIN #1G1YY22G7Y5119656)	00	Y07-37 (AK5, AX4, 92I) (1ST DES) (EXPORT) ..	1	10434540
7-A21	14.875	BELT, P/SEAT (RETR SI) (BLACK) (USED ON VEHICLES W/VIN #1G1YY22G7Y5119656 AND FUTURE)	00	Y07-37 (AK5, AX4, 19I) (2ND DES) (EXPORT) ..	1	10442990

cardiagn.com

							1Y14-033
	7-A21	14.875	BELT, P/SEAT (RETR SI) (PEWTER) (USED ON VEHICLES W/VIN #1G1YY22G7Y5119656 AND FUTURE)	00	Y07-37 (AK5, AX4, 92I) (2ND DES) (EXPORT) ..	1	10442991
	7-A21	14.875	BELT, P/SEAT (RETR SI) (RED) ..	01-02	Y07-37 (AK5, AX4, 70I) (EXC C88) (EXPORT) ..	1	10443013
	7-A21	14.875	BELT, P/SEAT (RETR SI) (BLACK)	01-02	Y07-37 (AK5, AX4, 19I) (EXC C88) (EXPORT) ..	1	10443014
	7-A21	14.875	BELT, P/SEAT (RETR SI) (PEWTER)	01-02	Y07-37 (AK5, AX4, 92I) (EXC C88) (EXPORT) ..	1	10443015
	7-A21	14.875	BELT, P/SEAT (RETR SI) (OAK) ..	01-02	Y07-37 (AK5, AX4, 67I) (EXC C88) (EXPORT) .	1	10443016
11.	7-A21	14.875	BOLT, D/SEAT SHLDR BELT GDE (BLACK) (8.900)	99-02	Y07-37 (AK5)	1	11516892
	7-A21	14.875	BOLT, P/SEAT SHLDR BELT GDE (BLACK) (8.900)	99-00	Y07-37	1	11516892
	7-A21	14.875	BOLT, P/SEAT SHLDR BELT GDE (BLACK) (8.900)	01-02	Y07-37 (AK5)	1	11516892
12.		N.S.	SEAT, DRVR (NTBP) (SEE GROUP 14 FOR SEAT DETAILS) .		.....		
		N.S.	SEAT, PASS (NTBP) (SEE GROUP 14 FOR SEAT DETAILS) .		.....		
13.	7-A21	14.875	NUT, D/SEAT BELT (BKL SI)	99-02	Y	1	25604879
	7-A21	14.875	NUT, P/SEAT BELT (BKL SI)	99-02	Y	1	25604879
14.	7-A21	14.875	BELT KIT, D/SEAT (BKL SI) (BLACK)	99-02	Y (19I)	1	12457501
	7-A21	14.875	BELT KIT, P/SEAT (BKL SI) (BLACK)	99-02	Y (19I)	1	12458065
	7-A21	14.875	BELT KIT, P/SEAT (BKL SI) (RED)	99	Y (94I)	1	12458479
15.	7-A21	14.875	COVER, D/SEAT SHLDR BELT GDE TR (BLACK)	99-02	Y07-37	1	10258492
	7-A21	14.875	COVER, P/SEAT SHLDR BELT GDE TR (BLACK)	99-02	Y07-37	1	10258492
16.		N.S.	PLATE, CHILD ST RST SYS BELT BRKT ANC (*KIT1)		.....		
17.	7-A21	14.870	PLATE, CHILD ST TOP STRP BRKT ANC (12.184)	00-02	Y37	1	10289507
	7-A21	14.870	PLATE, CHILD ST TOP STRP BRKT ANC (12.184)	99	Y37 (AN4) (EXPORT) ..	1	10289507
18.		N.S.	BOLT, CHILD ST TOP STRP BRKT		.....		
19.	7-A21	14.875	EXTENSION KIT, ST BELT (BLACK) (9") (FOR BREED BELTS W/O PRESS ON RELEASE BUTTON) (TYPE 10) (REFER TO GMSPO INFORMATION BULLETIN ON SEAT BELT EXTENDERS FOR DETAILED INFORMATION)	99-02	Y	AR	12533427
	7-A21	14.875	EXTENSION KIT, ST BELT (BLACK) (15") (FOR BREED BELTS W/O PRESS ON RELEASE BUTTON) (TYPE 10) (REFER TO GMSPO INFORMATION BULLETIN ON SEAT BELT EXTENDERS FOR DETAILED INFORMATION)	99-02	Y	AR	12533428

cardiagn.com

SERVICE KITS

1.	7–A21	14.870	BRACKET KIT, CHILD ST RST SYS BELT (KIT CONTAINS: 10415693 INSTL.INSTRUC. & 10294279 BELT ANC PLATE)	99–02	Y37 (Z49) (EXPORT) ...	1	10415692

RPO DEFINITIONS
AK5 – RESTRAINT SYSTEM,FRONT SEAT,INFLATABLE,DRIVER AND PASSENGER
AN4 – RESTRAINT PROVISIONS,CHILD(CANADIAN)
AX4 – RESTRAINT SYSTEM,FRONT AND REAR SEAT,MANUAL(EUROPEAN)
C86 – SWITCH INFL RST I/P MDL MAN SUPPRESSION –– DELETE
Z49 – MANDATORY CANADIAN BASE EQUIPMENT MODIFICATIONS(CANADIAN)
19I – INTERIOR TRIM,BLACK
67I – INTERIOR TRIM,CAMEL
70I – INTERIOR TRIM,TORCH RED
92I – INTERIOR TRIM SHALE/PEWTER
94I – INTERIOR TRIM FIRETHORN RED (97)

cardiagn.com

ILLUSTRATION INDEX

	TITLE	GRID
1997–1998	Y07 CARPET/INTERIOR (RR FLOOR & COMPARTMENT)	7–I4
1997–2002	Y07 CARPET/INTERIOR (FRONT FLOOR)	7–I8
1998–2000	Y67 CARPET/INTERIOR (RR FLOOR & COMPARTMENT)	7–I12
1998–2002	Y67 CARPET/INTERIOR (FRONT FLOOR)	7–I16
1999–2000	Y07 CARPET/INTERIOR (RR FLOOR & COMPARTMENT)	7–I20
1999–2000	Y37 CARPET/INTERIOR (RR FLOOR & COMPARTMENT)	7–I25
1999–2002	Y37 CARPET/INTERIOR (FRONT FLOOR)	7–I27
2001–2002	Y37 CARPET/INTERIOR (RR FLOOR & COMPARTMENT)	7–J2
2001–2002	Y07 CARPET/INTERIOR (RR FLOOR & COMPARTMENT)	7–J3
2001–2002	Y67 CARPET/INTERIOR (RR FLOOR & COMPARTMENT)	7–J7
1999–2002	Y COVER/REAR COMPARTMENT & CONVENIENCE NET	7–J10

cardiagn.com

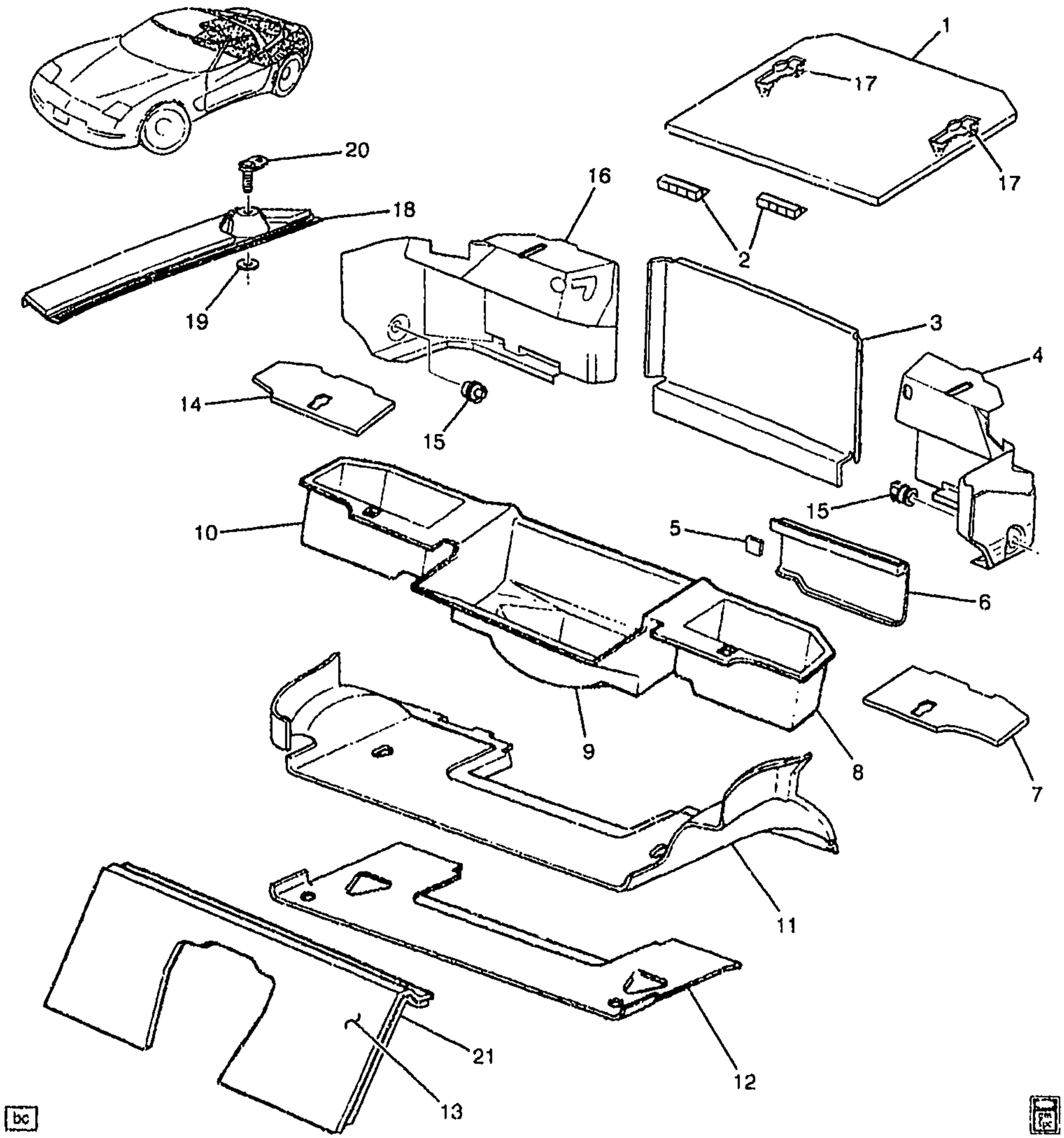

1Y15-012

1997-1998 Y07 CARPET/INTERIOR (RR FLOOR & COMPARTMENT)

1.	7-C7	15.222	COVER, R/CMPT FLR PNL STOW PKT ((INCLS 17) (BLACK) (CENTER)	97-98	Y (19I)	1	10413526
	7-C7	15.222	COVER, R/CMPT FLR PNL STOW PKT ((INCLS 17) (GRAY) (CENTER)	97-98	Y (92I)	1	10413527

cardiagn.com

							1Y15-012
	7-C7	15.222	COVER, R/CMPT FLR PNL STOW PKT ((INCLS 17) (RED) (CENTER)	97-98	Y (94I)	1	10413528
	7-C7	15.222	COVER, R/CMPT FLR PNL STOW PKT ((INCLS 17) (RED)	97-98	Y07 (94I)	LH	10413532
	7-C7	15.222	COVER, R/CMPT FLR PNL STOW PKT ((INCLS 17) (RED)	97-98	Y07 (94I)	RH	10413536
	7-C7	15.222	COVER, R/CMPT FLR PNL STOW PKT ((INCLS 17) (BLACK)	97-98	Y07 (19I)	LH	10434927
	7-C7	15.222	COVER, R/CMPT FLR PNL STOW PKT ((INCLS 17) (GRAY)	97-98	Y07 (92I)	LH	10434928
	7-C7	15.222	COVER, R/CMPT FLR PNL STOW PKT ((INCLS 17) (BLACK)	97-98	Y07 (19I)	RH	10434933
	7-C7	15.222	COVER, R/CMPT FLR PNL STOW PKT ((INCLS 17) (PEWTER)	97-98	Y07 (92I)	RH	10434934
	7-C7	15.222	COVER, R/CMPT FLR PNL STOW PKT ((INCLS 17) (CAMEL) (CENTER)	98	Y07-67 (67I)	1	10413529
	7-C7	15.222	COVER, R/CMPT FLR PNL STOW PKT ((INCLS 17) (CAMEL)	98	Y07 (67I)	LH	10434930
	7-C7	15.222	COVER, R/CMPT FLR PNL STOW PKT ((INCLS 17) (CAMEL)	98	Y07 (67I)	RH	10434936
2.		N.S.	RETAINER, R/CMPT PNL STOW PKT CVR		.....		
3.	7-C7	15.222	CARPET, R/END TR FIN PNL CTR (RED) (15.286)	97-98	Y07 (94I)	1	10275976
	7-C7	15.222	CARPET, R/END TR FIN PNL CTR (BLACK)	97-98	Y07 (19I)	1	10445783
	7-C7	15.222	CARPET, R/END TR FIN PNL CTR (PEWTER)	97-98	Y07 (92I)	1	10445784
	7-C7	15.222	CARPET, R/END TR FIN PNL CTR (OAK)	98	Y07 (67I)	1	10445785
4.	7-C7	15.222	CARPET, R/END TR FIN PNL OTR (PEWTER) (WHEN REPLACING 99 AND PRIOR CANCELLED PARTS, MUST REMOVE EXISTING INSULATOR AS THE INSULATOR IS ALREADY PART OF THE NEW CARPET) ...	97-98	Y07 (92I)	LH	10435605
	7-C7	15.222	CARPET, R/END TR FIN PNL OTR (BLACK) (WHEN REPLACING 99 AND PRIOR CANCELLED PARTS, MUST REMOVE EXISTING INSULATOR AS THE INSULATOR IS ALREADY PART OF THE NEW CARPET) ...	97-98	Y07 (19I)	LH	10435606
	7-C7	15.222	CARPET, R/END TR FIN PNL OTR (CAMEL) (WHEN REPLACING 99 AND PRIOR CANCELLED PARTS, MUST REMOVE EXISTING INSULATOR AS THE INSULATOR IS ALREADY PART OF THE NEW CARPET) ...	98	Y07 (67I)	LH	10435608
	7-C7	15.222	CARPET, R/END TR FIN PNL OTR (OUTER) (RED) (15.286)	97-98	Y07 (94I)	LH	10275955
5.	7-N2	7.450	RETAINER, ELEC SUSP CONT MDL FIN CVR (PART OF 6) (14.640)	97-98	Y07 (F45)	1	10267772

cardiagn.com

							1Y15-012
6.	7-N2	7.450	COVER, ELEK SUSP CONT MDL FIN (INCLS 5)	97	Y07 (F45)	LH	10286260
	7-N2	7.450	COVER, ELEK SUSP CONT MDL FIN (INCLS 5)	98	Y07-67 (F45)	LH	10286260
7.	7-C7	15.222	COVER, R/CMPT FLR PNL STOW PKT (RED)	97-98	Y07 (94I)	LH	10413532
	7-C7	15.222	COVER, R/CMPT FLR PNL STOW PKT (BLACK)	97-98	Y07 (19I)	LH	10434927
	7-C7	15.222	COVER, R/CMPT FLR PNL STOW PKT (GRAY)	97-98	Y07 (92I)	LH	10434928
	7-C7	15.222	COVER, R/CMPT FLR PNL STOW PKT (CAMEL)	98	Y07 (67I)	LH	10434930
8.		N.S.	TRIM, R/CMPT PNL STOW PKT (PART OF 9)			LH	
9.	7-C7	15.222	TRIM, R/CMPT FLR PNL STOW PKT (INCL 8, 10) (GRAY)	97	Y (EXC F45, U1S)	1	10292411
	7-C7	15.222	TRIM, R/CMPT FLR PNL STOW PKT (INCL 8, 10) (GRAY)	97	Y (U1S) (EXC F45)	1	10292412
	7-C7	15.222	TRIM, R/CMPT FLR PNL STOW PKT (INCL 8, 10) (GRAY)	97	Y07 (F45) (EXC U1S)	1	10292413
	7-C7	15.222	TRIM, R/CMPT FLR PNL STOW PKT (INCL 8, 10) (GRAY)	97	Y07 (F45, U1S)	1	10292414
	7-C7	15.222	TRIM, R/CMPT FLR PNL STOW PKT (INCL 8, 10) (GRAY)	98	Y07-67 (EXC F45, U1S)	1	10292411
	7-C7	15.222	TRIM, R/CMPT FLR PNL STOW PKT (INCL 8, 10) (GRAY)	98	Y07-67 (U1S) (EXC F45)	1	10292412
	7-C7	15.222	TRIM, R/CMPT FLR PNL STOW PKT (INCL 8, 10) (GRAY)	98	Y07-67 (F45) (EXC J1S)	1	10292413
	7-C7	15.222	TRIM, R/CMPT FLR PNL STOW PKT (INCL 8, 10) (GRAY)	98	Y07-67 (F45, U1S)	1	10292414
10.		N.S.	TRIM, R/CMPT FLR PNL STOW PKT (PART OF 9)				
11.	7-C7	15.222	CARPET, R/CMPT FLR PNL (INCLS 12) (BLACK) (WHEN REPLACING 99 AND PRIOR CANCELLED PARTS, MUST REMOVE EXISTING INSULATOR AS THE INSULATOR IS ALREADY PART OF THE NEW CARPET)	97-98	Y07 (19I)	1	10433845
	7-C7	15.222	CARPET, R/CMPT FLR PNL (INCLS 12) (PEWTER) (WHEN REPLACING 99 AND PRIOR CANCELLED PARTS, MUST REMOVE EXISTING INSULATOR AS THE INSULATOR IS ALREADY PART OF THE NEW CARPET)	97-98	Y07 (92I)	1	10433846
	7-C7	15.222	CARPET, R/CMPT FLR PNL (INCLS 12) (RED)	97-98	Y07 (94I)	1	10433847
	7-C7	15.222	CARPET, R/CMPT FLR PNL (INCLS 12) (CAMEL) (WHEN REPLACING 99 AND PRIOR CANCELLED PARTS, MUST REMOVE EXISTING INSULATOR AS THE INSULATOR IS ALREADY PART OF THE NEW CARPET)	98	Y07 (67I)	1	10433848

cardiagn.com

							1Y15-012
12.	7-N25	12.981	INSULATOR, R/FLR PNL CTR (PART OF 11) (54" WIDE, SOLD BY THE FOOT, CUT AS REQ) (15.492)	97-98	Y07	1	20464593
13.	7-N11	11.358	CARPET, F/SEAT BK BODY PNL (INCLS 21) (BLACK)	97-98	Y07 (19I)	1	10272042
	7-N11	11.358	CARPET, F/SEAT BK BODY PNL (INCLS 21) (PEWTER)	97-98	Y07 (92I)	1	10273214
	7-N11	11.358	CARPET, F/SEAT BK BODY PNL (INCLS 21) (RED)	97-98	Y07 (94I)	1	10273215
	7-N11	11.358	CARPET, F/SEAT BK BODY PNL (INCLS 21) (CAMEL)	98	Y07 (67I)	1	10285180
14.	7-C7	15.222	COVER, R/CMPT FLR PNL STOW PKT (RED)	97-98	Y07 (94I)	RH	10413536
	7-C7	15.222	COVER, R/CMPT FLR PNL STOW PKT (BLACK)	97-98	Y07 (19I)	RH	10434933
	7-C7	15.222	COVER, R/CMPT FLR PNL STOW PKT (PEWTER)	97-98	Y07 (92I)	RH	10434934
	7-C7	15.222	COVER, R/CMPT FLR PNL STOW PKT (CAMEL)	98	Y07 (67I)	RH	10434936
15.	7-C7	15.222	NUT, CONVENIENCE NET	97-98	Y07	2	10285966
16.	7-C7	15.222	CARPET, R/END TR FIN PNL OTR (PEWTER)	97-98	Y07 (92I)	RH	10432588
	7-C7	15.222	CARPET, R/END TR FIN PNL OTR (RED)	97-98	Y07 (94I)	RH	10432592
	7-C7	15.222	CARPET, R/END TR FIN PNL OTR (BLACK)	97-98	Y07 (19I)	RH	10435612
	7-C7	15.222	CARPET, R/END TR FIN PNL OTR (CAMEL)	98	Y07 (67I)	RH	10435614
17.	7-N25	12.977	LATCH, FLR K/UP PNL CPT (PART OF 1)	97-98	Y	2	10290666
18.	7-C7	15.222	INSULATOR, R/CMPT PNL FRM SI	97-98	Y07 (EXC VD1)	LH	10401944
	7-C7	15.222	INSULATOR, R/CMPT PNL FRM SI	97-98	Y07	RH	10401945
19.		8.921	NUT, PUSH-ON, M6X1, SPR STL, STYLE 1, POR (BODY S/PNL)	97-98		2	14093869
20.	7-C7	15.222	PLATE, CONVENIENCE NET UPR STUD (POSN #2) (4.785)	97-98	Y07	2	10404603
21.	7-N12	11.373	INSULATOR, F/SEAT BK BODY PNL (PART OF 13) (15.492)	97-98	Y07	1	20464592

RPO DEFINITIONS

F45 – CHASSIS CONTINUOUS VALVE REAL TIME DAMPING
U1S – PLAYER MULTIPLE COMPACT DISC
VD1 – PROVISION OPTIONS,EUROPE(EXPORT)
19I – INTERIOR TRIM,BLACK
67I – INTERIOR TRIM,CAMEI
92I – INTERIOR TRIM SHALE/PEWTER
94I – INTERIOR TRIM FIRETHORN RED (97)

cardiagn.com

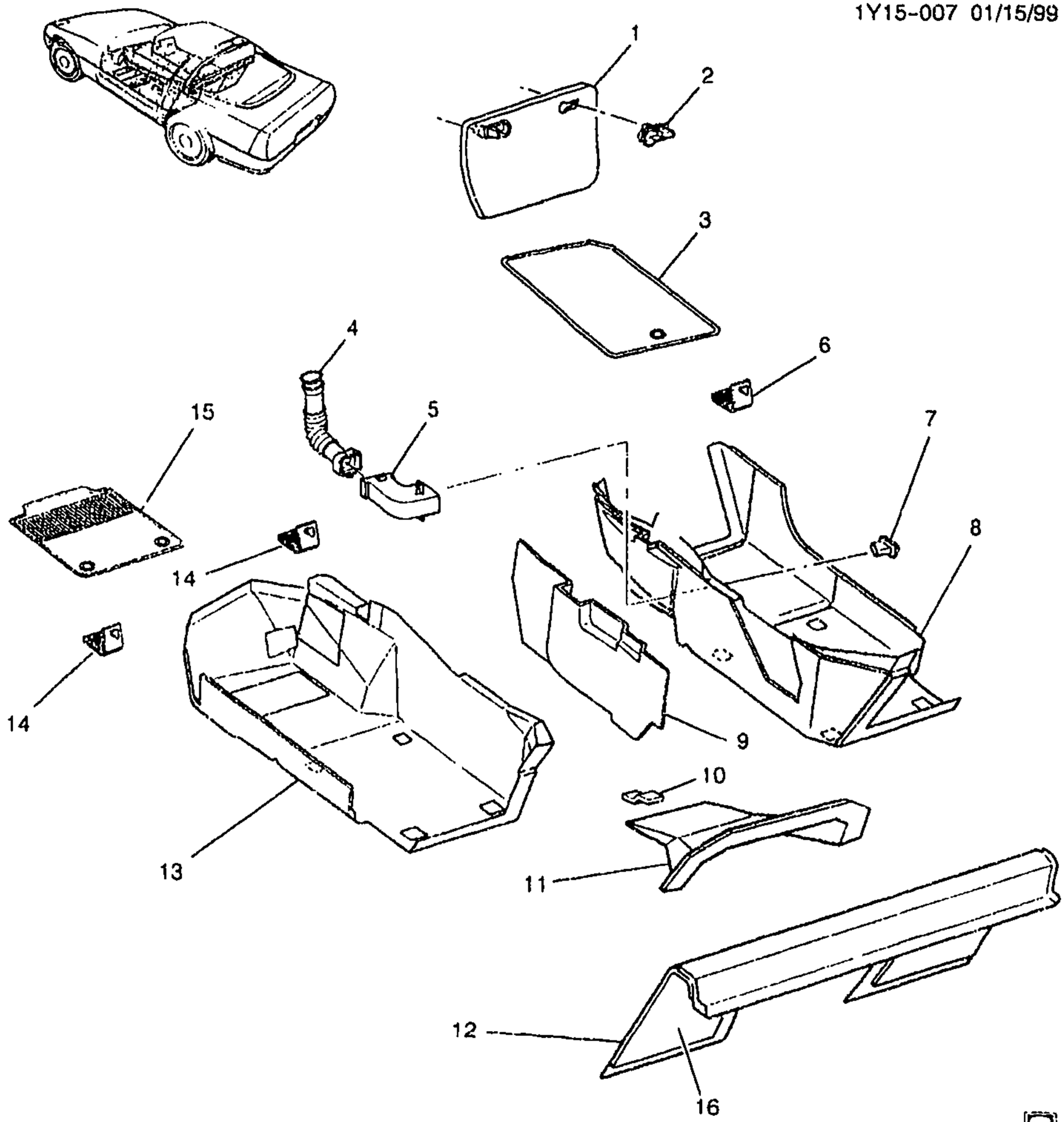

YV

1Y15-007

1997-2002 Y07 CARPET/INTERIOR (FRONT FLOOR)

1.	7-C13	15.286	CARPET, FLR K/UP PNL (INCLS 2) (BLACK)	97-00	Y (19I)	1	10290668
	7-C13	15.286	CARPET, FLR K/UP PNL (INCLS 2) (PEWTER)	97	Y07 (92I)	1	10290669
	7-C13	15.286	CARPET, FLR K/UP PNL (INCLS 2) (RED)	97	Y07 (94I)	1	10290670
	7-C13	15.286	CARPET, FLR K/UP PNL (INCLS 2) (PEWTER)	98-01	Y07-67 (92I)	1	10290669
	7-C13	15.286	CARPET, FLR K/UP PNL (INCLS 2) (RED)	98-99	Y07-67 (94I)	1	10290670

cardiagn.com

							1Y15-007
	7-C13	15.286	CARPET, FLR K/UP PNL (INCLS 2) (RED)	00-01	Y07-67 (70I)	1	10409421
	7-C13	15.286	CARPET, FLR K/UP PNL (INCLS 2) (BLACK)	01	Y07-67 (19I)	1	10290668
	7-C13	15.286	CARPET, FLR K/UP PNL (INCLS 2) (OAK)	98-01	Y07-67 (67I)	1	10290671
	7-C13	15.286	CARPET, FLR K/UP PNL (INCLS 2) (BLACK)	02	Y07-67 (19I)	1	10314495
	7-C13	15.286	CARPET, FLR K/UP PNL (INCLS 2)	02	Y07-67 (92I)	1	10314496
	7-C13	15.286	CARPET, FLR K/UP PNL (INCLS 2) (OAK)	02	Y07-67 (67I)	1	10314497
	7-C13	15.286	CARPET, FLR K/UP PNL (INCLS 2) (RED)	02	Y07-67 (70I)	1	10314498
2.	7-N25	12.977	LATCH, FLR K/UP PNL CPT (PART OF 1)	97-02	Y	2	10290666
3.	7-M13	21.360 A	MAT PKG, F/FLR AUX (TWIN-CPT) (BLACK) (NO LOGO) (15.286)	97-00	Y (19I)	1	12371230
	7-M13	21.360 A	MAT PKG, F/FLR AUX (TWIN-CPT) (PEWTER) (15.286)	97	Y07 (92I)	1	12371231
	7-M13	21.360 A	MAT PKG, F/FLR AUX (TWIN-CPT) (PEWTER) (15.286)	98-02	Y07-67 (92I)	1	12371231
	7-M13	21.360 A	MAT PKG, F/FLR AUX (TWIN-CPT) (CAMEL) (15.286)	98-02	Y07-67 (67I)	1	12371306
	7-M13	21.360 A	MAT PKG, F/FLR AUX (TWIN-CPT) (RED) (15.286)	00-02	Y07-67 (70I)	1	12496169
	7-M13	21.360 A	MAT PKG, F/FLR AUX (TWIN-CPT) (BLACK) (NO LOGO) (15.286)	01-02	Y07-67 (19I)	1	12371230
4.	7-N3	9.262	DUCT, FLR AIR OTLT RR (RIGHT SIDE ONLY)	97-02	Y	RH	10283464
5.	7-N3	9.262	OUTLET, FLR AIR INR HALF (BLACK)	97-00	Y (19I)	1	10403256
	7-N3	9.262	OUTLET, FLR AIR INR HALF (PEWTER)	97	Y (92I)	1	10403257
	7-N3	9.262	OUTLET, FLR AIR INR HALF (RED)	97-98	Y (94I)	1	10403258
	7-N3	9.262	OUTLET, FLR AIR INR HALF (PEWTER)	98-02	Y07-67 (92I)	1	10403257
	7-N3	9.262	OUTLET, FLR AIR INR HALF (CAMEL)	98-02	Y07-67 (67I)	1	10403259
	7-N3	9.262	OUTLET, FLR AIR INR HALF (RED)	99	Y07-67 (94I)	1	10403258
	7-N3	9.262	OUTLET, FLR AIR INR HALF (RED)	00-02	Y07-67 (70I)	1	10409411
	7-N3	9.262	OUTLET, FLR AIR INR HALF (BLACK)	01-02	Y07-67 (19I)	1	10403256
6.	7-C14	15.300	HOOK, F/FLR CPT (PART OF 8)	97-02	Y	RH	10275204
7.	7-N3	9.262	OUTLET, FLR AIR OTR HALF (RED)	97	Y (94I)	1	10403253
	7-N3	9.262	OUTLET, FLR AIR OTR HALF (BLACK)	97-00	Y (19I)	1	10414489
	7-N3	9.262	OUTLET, FLR AIR OTR HALF (SHALE/PEWTER)	97	Y (92I)	1	10414490
	7-N3	9.262	OUTLET, FLR AIR OTR HALF (RED)	98-99	Y07-67 (94I)	1	10403253

cardiagn.com

							1Y15-007
	7-N3	9.262	OUTLET, FLR AIR OTR HALF (SHALE/PEWTER)	98-02	Y07-67 (92I)	1	10414490
	7-N3	9.262	OUTLET, FLR AIR OTR HALF (CAMEL)	98-02	Y07-67 (67I)	1	10414492
	7-N3	9.262	OUTLET, FLR AIR OTR HALF (RED)	00-02	Y07-67 (70I)	1	10409412
	7-N3	9.262	OUTLET, FLR AIR OTR HALF (BLACK)	01-02	Y07-67 (19I)	1	10414489
8.	7-C13	15.286	CARPET, F/FLR PNL (INCLS 3) (BLACK)	97-00	Y (19I)	RH	10412806
	7-C13	15.286	CARPET, F/FLR PNL (INCLS 6) (SHALE/PEWTER)	97-98	Y (92I)	RH	10412807
	7-C13	15.286	CARPET, F/FLR PNL (INCLS 6) (RED)	97-98	Y (94I)	RH	10412808
	7-C13	15.286	CARPET, F/FLR PNL (INCLS 6) (CAMEL)	98	Y (67I)	RH	10412809
	7-C13	15.286	CARPET, F/FLR PNL (INCLS 6) (SHALE/PEWTER)	99-02	Y07-67 (92I)	RH	10412807
	7-C13	15.286	CARPET, F/FLR PNL (INCLS 6) (RED)	99	Y07-67 (94I)	RH	10412808
	7-C13	15.286	CARPET, F/FLR PNL (INCLS 6) (CAMEL)	99-02	Y07-67 (67I)	RH	10412809
	7-C13	15.286	CARPET, F/FLR PNL (INCLS 6) (RED)	00-02	Y07-67 (70I)	RH	10409419
	7-C13	15.286	CARPET, F/FLR PNL (INCLS 6) (BLACK)	01-02	Y07-67 (19I)	RH	10412806
9.	7-N25	12.980	INSULATOR, FLR PNL FRT	97-98	Y	1	10285633
	7-N25	12.980	INSULATOR, FLR PNL FRT (RH ONLY)	99-02	Y	1	10285633
10.		N.S.	RETAINER, FLR FRT INSL				
11.	7-N25	12.980	INSULATOR, FLR PNL FRT CTR (54" WIDE, SOLD BY THE FOOT, CUT AS REQ) (15.492)	97-02	Y	1	20464593
12.	7-N11	11.358	CARPET, F/SEAT BK BODY PNL (BLACK)	97-02	Y07 (19I)	1	10272042
	7-N11	11.358	CARPET, F/SEAT BK BODY PNL (PEWTER)	97-02	Y07 (92I)	1	10273214
	7-N11	11.358	CARPET, F/SEAT BK BODY PNL (RED)	97-99	Y07 (94I)	1	10271215
	7-N11	11.358	CARPET, F/SEAT BK BODY PNL (CAMEL)	98-02	Y07 (67I)	1	10285180
	7-N11	11.358	CARPET, F/SEAT BK BODY PNL (RED)	00-02	Y07 (70I)	1	10409427
13.	7-C13	15.286	CARPET, F/FLR PNL (INCLS 14) (BLACK)	97-00	Y (19I)	LH	10412799
	7-C13	15.286	CARPET, F/FLR PNL (INCLS 14) (SHALE/PEWTER)	97	Y07 (92I)	LH	10412800
	7-C13	15.286	CARPET, F/FLR PNL (INCLS 14) (RED)	97-98	Y (94I)	LH	10412801
	7-C13	15.286	CARPET, F/FLR PNL (INCLS 14) (SHALE/PEWTER)	98-02	Y07-67 (92I)	LH	10412800
	7-C13	15.286	CARPET, F/FLR PNL (INCLS 14) (CAMEL)	98	Y (67I)	LH	10412802
	7-C13	15.286	CARPET, F/FLR PNL (INCLS 14) (RED)	99	Y07-67 (94I)	LH	10412801
	7-C13	15.286	CARPET, F/FLR PNL (INCLS 14) (CAMEL)	99-02	Y07-67 (67I)	LH	10412802

cardiagn.com

							1Y15-007
	7-C13	15.286	CARPET, F/FLR PNL (INCLS 14) (RED)	00-02	Y07-67 (70I)	LH	10409420
	7-C13	15.286	CARPET, F/FLR PNL (INCLS 14) (BLACK)	01-02	Y07-67 (19I)	LH	10412799
14.	7-C14	15.300	HOOK, F/FLR CPT (PART OF 13)	97-02	Y	LH	10275204
15.	7-M13	21.360 A	MAT PKG, F/FLR AUX (TWIN-CPT) (BLACK) (NO LOGO) (15.286)	97-00	Y (19I)	1	12371230
	7-M13	21.360 A	MAT PKG, F/FLR AUX (TWIN-CPT) (PEWTER) (15.286)	97	Y07 (92I)	1	12371231
	7-M13	21.360 A	MAT PKG, F/FLR AUX (TWIN-CPT) (PEWTER) (15.286)	98-02	Y07-67 (92I)	1	12371231
	7-M13	21.360 A	MAT PKG, F/FLR AUX (TWIN-CPT) (CAMEL) (15.286)	98-02	Y07-67 (67I)	1	.2371306
	7-M13	21.360 A	MAT PKG, F/FLR AUX (TWIN-CPT) (RED) (15.286)	00-02	Y07-67 (70I)	1	12496169
	7-M13	21.360 A	MAT PKG, F/FLR AUX (TWIN-CPT) (BLACK) (NO LOGO) (15.286)	01-02	Y07-67 (19I)	1	12371230
16.	7-N12	11.373	INSULATOR, F/SEAT BK BODY PNL (15.492)	97-02	Y07	1	20464592

RPO DEFINITIONS
19I – INTERIOR TRIM,BLACK
67I – INTERIOR TRIM,CAMEL
70I – INTERIOR TRIM,TORCH RED
92I – INTERIOR TRIM SHALE/PEWTER
94I – INTERIOR TRIM FIRETHORN RED (97)

cardiagn.com

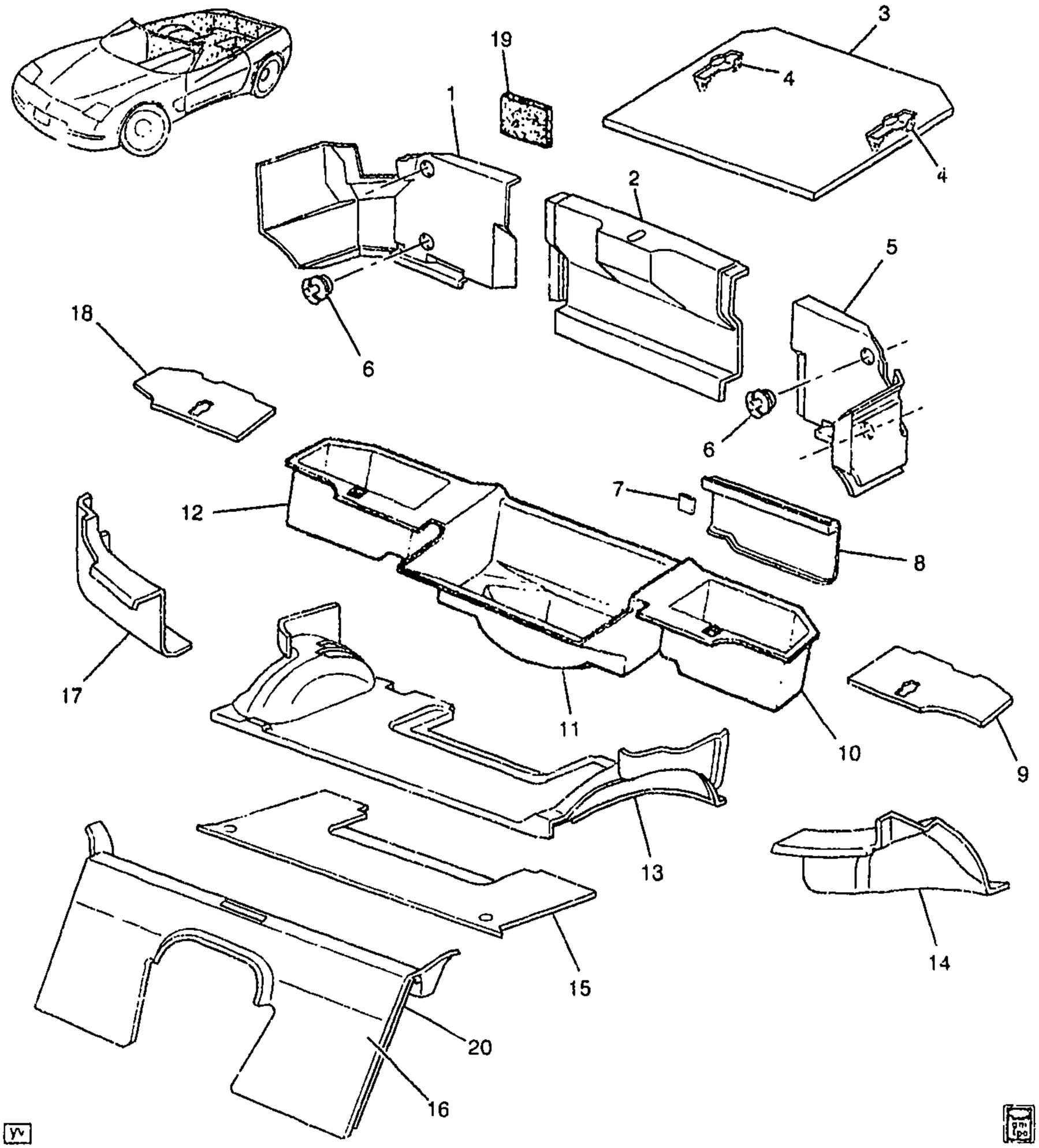

1Y15-006

1998-2000 Y67 CARPET/INTERIOR (RR FLOOR & COMPARTMENT)

1.	7-C7	15.222	CARPET, R/END TR FIN PNL OTR (PEWTER)	98-00	Y67 (92I)	RH	10275962
	7-C7	15.222	CARPET, R/END TR FIN PNL OTR (RED)	98-99	Y67 (94I)	RH	10275964
	7-C7	15.222	CARPET, R/END TR FIN PNL OTR (BLACK) (15.286)	98-00	Y67 (19I)	RH	10409822

cardiagn.com

							1Y15-006
	7-C7	15.222	CARPET, R/END TR FIN PNL OTR (CAMEL) (15.286)	98-00	Y67 (67I)	RH	10409825
	7-C7	15.222	CARPET, R/END TR FIN PNL OTR (RED)	00	Y67 (70I)	RH	10409434
	7-C7	15.222	RETAINER, R/END TR FIN PNL	98-00	Y67	6	10410732
2.	7-C7	15.222	CARPET, R/END TR FIN PNL CTR (PEWTER)	98-00	Y67 (92I)	1	10275979
	7-C7	15.222	CARPET, R/END TR FIN PNL CTR (RED)	98-99	Y67 (94I)	1	10275980
	7-C7	15.222	CARPET, R/END TR FIN PNL CTR (BLACK)	98-00	Y67 (19I)	1	10413361
	7-C7	15.222	CARPET, R/END TR FIN PNL CTR (CAMEL)	98-00	Y67 (67I)	1	10413364
	7-C7	15.222	CARPET, R/END TR FIN PNL CTR (RED)	00	Y67 (70I)	1	10409430
3.	7-C7	15.222	COVER, R/CMPT FLR PNL STOW PKT (19I) (INCLS 4) (BLACK) (CENTER)	98-00	Y67	1	10413526
	7-C7	15.222	COVER, R/CMPT FLR PNL STOW PKT (92I) (INCLS 4) (GRAY) (CENTER)	98-00	Y67	1	10413527
	7-C7	15.222	COVER, R/CMPT FLR PNL STOW PKT (94I) (INCLS 4) (RED) (CENTER)	98-99	Y67	1	10413528
	7-C7	15.222	COVER, R/CMPT FLR PNL STOW PKT (67I) (INCLS 4) (CAMEL) (CENTER)	98-00	Y67	1	10413529
	7-C7	15.222	COVER, R/CMPT FLR PNL STOW PKT (70I) (INCLS 4) (RED) (CENTER)	00	Y67	1	10409413
4.	7-N25	12.977	LATCH, FLR K/UP PNL CPT (PART OF 3)	98-00	Y	2	10290666
5.	7-C7	15.222	CARPET, R/END TR FIN PNL OTR (PEWTER)	98-00	Y67 (92I)	LH	10275961
	7-C7	15.222	CARPET, R/END TR FIN PNL OTR (RED)	98-99	Y67 (94I)	LH	10275963
	7-C7	15.222	CARPET, R/END TR FIN PNL OTR (BLACK) (15.286)	98-00	Y67 (19I)	LH	10409818
	7-C7	15.222	CARPET, R/END TR FIN PNL OTR (CAMEL) (15.286)	98-00	Y67 (67I)	LH	10409821
	7-C7	15.222	CARPET, R/END TR FIN PNL OTR (RED)	00	Y67 (70I)	LH	10409433
	7-C7	15.222	RETAINER, R/END TR FIN PNL	98-00	Y67	6	10410732
6.	7-C7	15.222	NUT, CONVENIENCE NET	98-00	Y67	4	10285966
	7-C7	15.222	NET, CONVENIENCE	98-00	Y67	1	10405356
7.	7-N2	7.450	RETAINER, ELEC SUSP CONT MDL FIN CVR (PART OF 8) (14.640)	98-00	Y67 (F45)	1	10267772
8.	7-N2	7.450	COVER, ELEK SUSP CONT MDL FIN (INCLS 7)	98-00	Y07-67 (F45)	LH	10286260
9.	7-C7	15.222	COVER, R/CMPT FLR PNL STOW PKT (RED)	98-99	Y67 (94I)	LH	10402933
	7-C7	15.222	COVER, R/CMPT FLR PNL STOW PKT (BLACK)	98-00	Y67 (19I)	LH	10413538
	7-C7	15.222	COVER, R/CMPT FLR PNL STOW PKT (SHALE/PEWTER)	98-00	Y67 (92I)	LH	10413539
	7-C7	15.222	COVER, R/CMPT FLR PNL STOW PKT (CAMEL)	98-00	Y67 (67I)	LH	10413541

cardiagn.com

	7-C7	15.222	COVER, R/CMPT FLR PNL STOW PKT (RED)	00	Y67 (70I)	LH	10409416
10.		N.S.	TRIM, R/CMPT PNL STOW PKT (PART OF 11)			LH	
11.	7-C7	15.222	TRIM, R/CMPT FLR PNL STOW PKT (INCLS 10, 12) (GRAY)	98-00	Y07-67 (EXC F45, U1S)	1	10292411
	7-C7	15.222	TRIM, R/CMPT FLR PNL STOW PKT (INCLS 10, 12) (GRAY)	98-00	Y07-67 (U1S) (EXC F45)	1	10292412
	7-C7	15.222	TRIM, R/CMPT FLR PNL STOW PKT (INCLS 10, 12) (GRAY)	98-00	Y07-67 (F45) (EXC U1S)	1	10292413
	7-C7	15.222	TRIM, R/CMPT FLR PNL STOW PKT (INCLS 10, 12) (GRAY)	98-00	Y07-67 (F45, U1S)	1	10292414
12.		N.S.	TRIM, R/CMPT PNL STOW PKT (PART OF 11)			RH	
13.	7-C7	15.222	CARPET, R/CMPT FLR PNL (INCLS 15) (PEWTER) (15.286)	98-00	Y67 (92I)	1	10407008
	7-C7	15.222	CARPET, R/CMPT FLR PNL (INCLS 15) (RED) (15.286)	98-99	Y67 (94I)	1	10407009
	7-C7	15.222	CARPET, R/CMPT FLR PNL (INCLS 15) (BLACK) (WHEN REPLACING 99 AND PRIOR CANCELLED PARTS, MUST REMOVE EXISTIONG INSULATOR AS THE INSULATOR IS ALREADY PART OF THE NEW CARPET)	98-00	Y67 (19I)	1	10433839
	7-C7	15.222	CARPET, R/CMPT FLR PNL (INCLS 15) (CAMEL) (WHEN REPLACING 99 AND PRIOR CANCELLED PARTS, MUST REMOVE EXISTING INSULATOR AS THE INSULATOR IS ALREADY PART OF THE NEW CARPET)	98-00	Y67 (67I)	1	10433842
	7-C7	15.222	CARPET, R/CMPT FLR PNL (INCLS 15) (RED) (WHEN REPLACING 99 AND PRIOR CANCELLED PARTS, MUST REMOVE EXISTING INSULATOR AS THE INSULATOR IS ALREADY PART OF THE NEW CARPET)	00	Y67 (70I)	1	10433843
14.	7-C6	15.100	CARPET, RR W/H & BODY L/PLR FIN PNL (BLACK)	98-00	Y67 (19I)	LH	10298499
	7-C6	15.100	CARPET, RR W/H & BODY L/PLR FIN PNL (PEWTER)	98-00	Y67 (92I)	LH	10298501
	7-C6	15.100	CARPET, RR W/H & BODY L/PLR FIN PNL (RED)	98-99	Y67 (94I)	LH	10298503
	7-C6	15.100	CARPET, RR W/H & BODY L/PLR FIN PNL (CAMEL)	98-00	Y67 (67I)	LH	10298505
	7-C6	15.100	CARPET, RR W/H & BODY L/PLR FIN PNL (RED)	00	Y67 (70I)	LH	10409424
15.	7-N25	12.981	INSULATOR, R/FLR PNL CTR (PART OF 13) (15.492)	98-00	Y67	1	20464592
16.	7-N11	11.358	CARPET, F/SEAT BK BODY PNL (INCLS 20) (BLACK)	98-00	Y67 (19I)	1	10277793
	7-N11	11.358	CARPET, F/SEAT BK BODY PNL (INCLS 20) (PEWTER)	98-00	Y67 (92I)	1	10277794
	7-N11	11.358	CARPET, F/SEAT BK BODY PNL (INCLS 20) (RED)	98-99	Y67 (94I)	1	10277795

cardiagn.com

	7–N11	11.358	CARPET, F/SEAT BK BODY PNL (INCLS 20) (CAMEL)	98–00	Y67 (67I)	1	10285190
	7–N11	11.358	CARPET, F/SEAT BK BODY PNL (INCLS 20) (RED)	00	Y67 (70I)	1	10409428
17.	7–C6	15.100	CARPET, RR W/H & BODY L/PLR FIN PNL (BLACK)	98–00	Y67 (19I)	RH	10298500
	7–C6	15.100	CARPET, RR W/H & BODY L/PLR FIN PNL (PEWTER)	98–00	Y67 (92I)	RH	10298502
	7–C6	15.100	CARPET, RR W/H & BODY L/PLR FIN PNL (RED)	98–99	Y67 (94I)	RH	10298504
	7–C6	15.100	CARPET, RR W/H & BODY L/PLR FIN PNL (CAMEL)	98–00	Y67 (67I)	RH	10298506
•	7–C6	15.100	CARPET, RR W/H & BODY L/PLR FIN PNL (RED)	00	Y67 (70I)	RH	10409425
18.	7–C7	15.222	COVER, R/CMPT FLR PNL STOW PKT (BLACK)	98–00	Y67 (19I)	RH	10413542
	7–C7	15.222	COVER, R/CMPT FLR PNL STOW PKT (SHALE/PEWTER)	98–00	Y67 (92I)	RH	10413543
	7–C7	15.222	COVER, R/CMPT FLR PNL STOW PKT (RED)	98–99	Y67 (94I)	RH	10413544
	7–C7	15.222	COVER, R/CMPT FLR PNL STOW PKT (CAMEL)	98–00	Y67 (67I)	RH	10413545
	7–C7	15.222	COVER, R/CMPT FLR PNL STOW PKT (RED)	00	Y67 (70I)	RH	10409417
19.		8.958	VELCRO, (HOOK) 25.4MMX25 YD ROLL LOW CYCLE HIGH STRENGTH (R/CMPT PNL CPT FSTN)	98–00		1	12520272
20.		N.S.	INSULATOR, F/SEAT BK BODY PNL (PART OF 16)			1	

RPO DEFINITIONS
F45 – CHASSIS CONTINUOUS VALVE REAL TIME DAMPING
U1S – PLAYER MULTIPLE COMPACT DISC
19I – INTERIOR TRIM,BLACK
67I – INTERIOR TRIM,CAMEL
70I – INTERIOR TRIM,TORCH RED
92I – INTERIOR TRIM SHALE/PEWTER
94I – INTERIOR TRIM FIRETHORN RED (97)

cardiagn.com

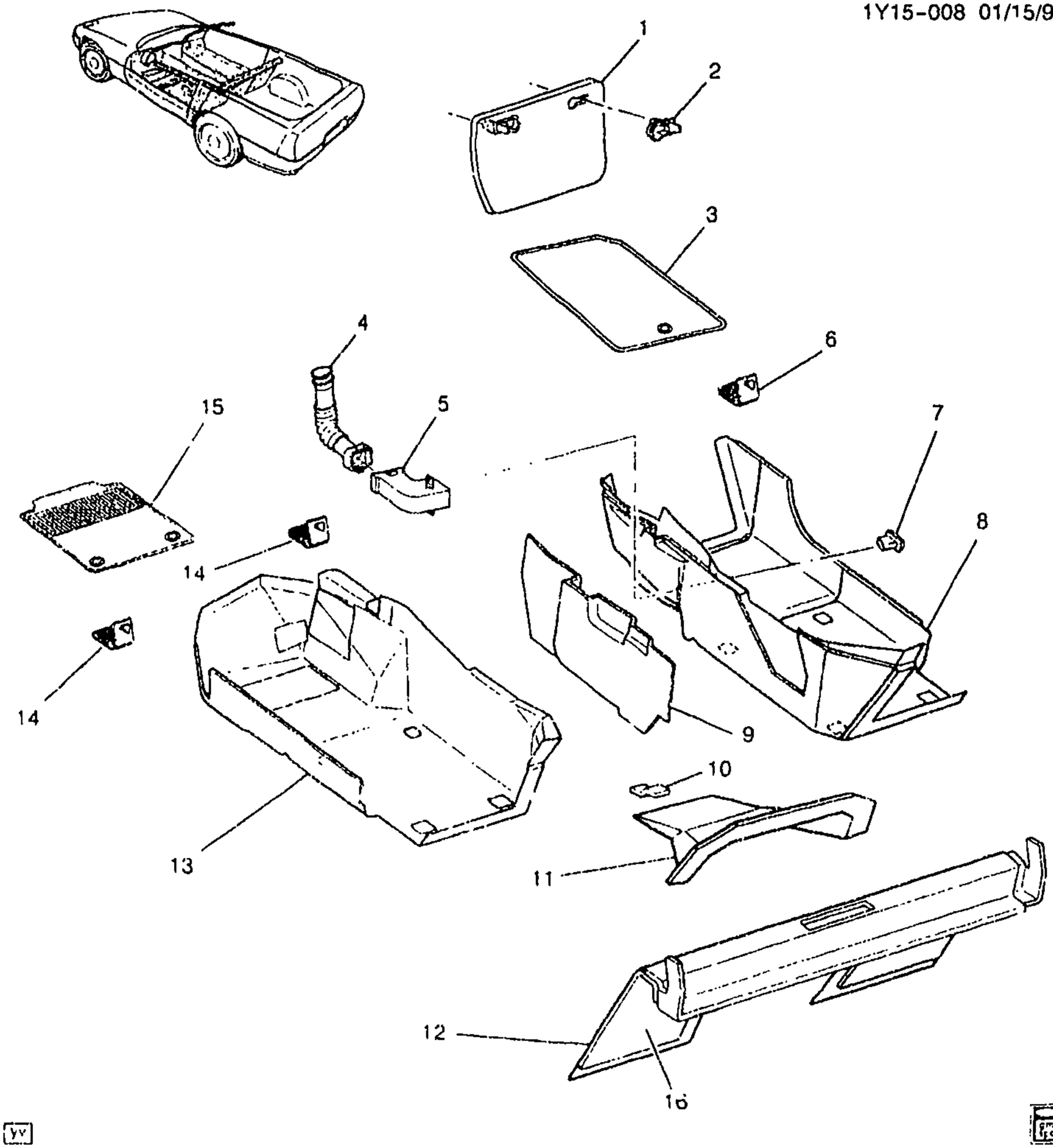

1990-2002 Y67 CARPET/INTERIOR (FRONT FLOOR)

1.	7-C13	15.286	CARPET, FLR K/UP PNL (INCLS 2) (BLACK)	98-00	Y (19I)	1	10290668
	7-C13	15.286	CARPET, FLR K/UP PNL (INCLS 2) (RED)	98-99	Y07-67 (94I)	1	10290670
	7-C13	15.286	CARPET, FLR K/UP PNL (INCLS 2) (OAK)	98-01	Y07-67 (67I)	1	10290671
	7-C13	15.286	CARPET, FLR K/UP PNL (INCLS 2) (BLACK)	01	Y07-67 (19I)	1	10290668
	7-C13	15.286	CARPET, FLR K/UP PNL (INCLS 2) (PEWTER)	98-01	Y07-67 (92I)	1	10290669

cardiagn.com

	7–C13	15.286	CARPET, FLR K/UP PNL (INCLS 2) (RED)	00–01	Y07–67 (70I)	1	10409421
	7–C13	15.286	CARPET, FLR K/UP PNL (INCLS 2) (BLACK)	02	Y07–67 (19I)	1	10314495
	7–C13	15.286	CARPET, FLR K/UP PNL (INCLS 2)	02	Y07–67 (92I)	1	10314496
	7–C13	15.286	CARPET, FLR K/UP PNL (INCLS 2) (OAK)	02	Y07–67 (67I)	1	10314497
	7–C13	15.286	CARPET, FLR K/UP PNL (INCLS 2) (RED)	02	Y07–67 (70I)	1	10314498
2.	7–N25	12.977	LATCH, FLR K/UP PNL CPT (PART OF 1)	98–02	Y	2	10290666
3.	7–M13	21.360 A	MAT PKG, F/FLR AUX (TWIN–CPT) (BLACK) (NO LOGO) (15.286)	98–00	Y (19I)	1	12371230
	7–M13	21.360 A	MAT PKG, F/FLR AUX (TWIN–CPT) (PEWTER) (15.286)	98–02	Y07–67 (92I)	1	12371231
	7–M13	21.360 A	MAT PKG, F/FLR AUX (TWIN–CPT) (CAMEL) (15.286)	98–02	Y07–67 (67I)	1	12371306
	7–M13	21.360 A	MAT PKG, F/FLR AUX (TWIN–CPT) (RED) (15.286)	00–02	Y07–67 (70I)	1	12496169
	7–M13	21.360 A	MAT PKG, F/FLR AUX (TWIN–CPT) (BLACK) (NO LOGO) (15.286)	01–02	Y07–67 (19I)	1	12371230
4.	7–N3	9.262	DUCT, FLR AIR OTLT RR (RIGHT SIDE ONLY)	98–02	Y	RH	10283464
5.	7–N3	9.262	OUTLET, FLR AIR INR HALF (BLACK)	98–00	Y (19I)	1	10403256
	7–N3	9.262	OUTLET, FLR AIR INR HALF (RED)	98	Y (94I)	1	10403258
	7–N3	9.262	OUTLET, FLR AIR INR HALF (PEWTER)	98–02	Y07–67 (92I)	1	10403257
	7–N3	9.262	OUTLET, FLR AIR INR HALF (CAMEL)	98–02	Y07–67 (67I)	1	10403259
	7–N3	9.262	OUTLET, FLR AIR INR HALF (RED)	99	Y07–67 (94I)	1	10403258
	7–N3	9.262	OUTLET, FLR AIR INR HALF (RED)	00–02	Y07–67 (70I)	1	10409411
	7–N3	9.262	OUTLET, FLR AIR INR HALF (BLACK)	01–02	Y07–67 (19I)	1	10403256
6.	7–C14	15.300	HOOK, F/FLR CPT	98–02		RH	10275204
7.	7–N3	9.262	OUTLET, FLR AIR OTR HALF (BLACK)	98–00	Y (19I)	1	10414489
	7–N3	9.262	OUTLET, FLR AIR OTR HALF (RED)	98–99	Y07–67 (94I)	1	10403253
	7–N3	9.262	OUTLET, FLR AIR OTR HALF (SHALE/PEWTER)	98–02	Y07–67 (92I)	1	10414490
	7–N3	9.262	OUTLET, FLR AIR OTR HALF (CAMEL)	98–02	Y07–67 (67I)	1	10414492
	7–N3	9.262	OUTLET, FLR AIR OTR HALF (RED)	00–02	Y07–67 (70I)	1	10409412
	7–N3	9.262	OUTLET, FLR AIR OTR HALF (BLACK)	01–02	Y07–67 (19I)	1	10414489
8.	7–C13	15.286	CARPET, F/FLR PNL (BLACK)	98–00	Y (19I)	RH	10412806
	7–C13	15.286	CARPET, F/FLR PNL (SHALE/PEWTER)	98	Y (92I)	RH	10412807
	7–C13	15.286	CARPET, F/FLR PNL (RED)	98	Y (94I)	RH	10412808
	7–C13	15.286	CARPET, F/FLR PNL (CAMEL)	98	Y (67I)	RH	10412809

cardiagn.com

	7-C13	15.286	CARPET, F/FLR PNL (SHALE/PEWTER)	99-02	Y07-67 (92I)	RH	10412807
	7-C13	15.286	CARPET, F/FLR PNL (RED)	99	Y07-67 (94I)	RH	10412808
	7-C13	15.286	CARPET, F/FLR PNL (CAMEL)	99-02	Y07-67 (67I)	RH	10412809
	7-C13	15.286	CARPET, F/FLR PNL (RED)	00-02	Y07-67 (70I)	RH	10409419
	7-C13	15.286	CARPET, F/FLR PNL (BLACK)	01-02	Y07-67 (19I)	RH	10412806
9.	7-N25	12.980	INSULATOR, FLR PNL FRT	98	Y	1	10285633
	7-N25	12.980	INSULATOR, FLR PNL FRT (RH ONLY)	99-02	Y	1	10285633
10.		N.S.	RETAINER, FLR FRT INSL				
11.	7-N25	12.980	INSULATOR, FLR PNL FRT CTR (54" WIDE, SOLD BY THE FOOT, CUT AS REQ) (15.492)	98-02	Y	1	20464593
12.	7-N11	11.358	CARPET, F/SEAT BK BODY PNL (BLACK)	98-00	Y67 (19I)	1	10277793
	7-N11	11.358	CARPET, F/SEAT BK BODY PNL (PEWTER)	98-00	Y67 (92I)	1	10277794
	7-N11	11.358	CARPET, F/SEAT BK BODY PNL (RED)	98-99	Y67 (94I)	1	10277795
	7-N11	11.358	CARPET, F/SEAT BK BODY PNL (CAMEL)	98-00	Y67 (67I)	1	10285190
	7-N11	11.358	CARPET, F/SEAT BK BODY PNL (RED)	00	Y67 (70I)	1	10409428
	7-N11	11.358	CARPET, F/SEAT BK BODY PNL (BLACK)	01-02	Y67 (19I)	1	10439078
	7-N11	11.358	CARPET, F/SEAT BK BODY PNL (PEWTER)	01-02	Y67 (92I)	1	10439079
	7-N11	11.358	CARPET, F/SEAT BK BODY PNL (OAK)	01-02	Y67 (67I)	1	10439080
	7-N11	11.358	CARPET, F/SEAT BK BODY PNL (RED)	01-02	Y67 (70I)	1	10439081
13.	7-C13	15.286	CARPET, F/FLR PNL (BLACK)	98-00	Y (19I)	LH	10412799
	7-C13	15.286	CARPET, F/FLR PNL (RED)	98	Y (94I)	LH	10412801
	7-C13	15.286	CARPET, F/FLR PNL (SHALE/PEWTER)	98-02	Y07-67 (92I)	LH	10412800
	7-C13	15.286	CARPET, F/FLR PNL (CAMEL)	98	Y (67I)	LH	10412802
	7-C13	15.286	CARPET, F/FLR PNL (RED)	99	Y07-67 (94I)	LH	10412801
	7-C13	15.286	CARPET, F/FLR PNL (CAMEL)	99-02	Y07-67 (67I)	LH	10412802
	7-C13	15.286	CARPET, F/FLR PNL (RED)	00-02	Y07-67 (70I)	LH	10409420
	7-C13	15.286	CARPET, F/FLR PNL (BLACK)	01-02	Y07-67 (19I)	LH	10412799
14.	7-C14	15.300	HOOK, F/FLR CPT	98-02		LH	10275204
15.	7-M13	21.360 A	MAT PKG, F/FLR AUX (TWIN-CPT) (BLACK) (NO LOGO) (15.286)	98-00	Y (19I)	1	12371230
	7-M13	21.360 A	MAT PKG, F/FLR AUX (TWIN-CPT) (PEWTER) (15.286)	98-02	Y07-67 (92I)	1	12371231
	7-M13	21.360 A	MAT PKG, F/FLR AUX (TWIN-CPT) (CAMEL) (15.286)	98-02	Y07-67 (67I)	1	12371306
	7-M13	21.360 A	MAT PKG, F/FLR AUX (TWIN-CPT) (RED) (15.286)	00-02	Y07-67 (70I)	1	12496169
	7-M13	21.360 A	MAT PKG, F/FLR AUX (TWIN-CPT) (BLACK) (NO LOGO) (15.286)	01-02	Y07-67 (19I)	1	12371230
16.		N.S.	INSULATOR, F/SEAT BK BODY PNL				

RPO DEFINITIONS
19I - INTERIOR TRIM,BLACK

cardiagn.com

701 – INTERIOR TRIM,TORCH RED
921 – INTERIOR TRIM SHALE/PEWTER
941 – INTERIOR TRIM FIRETHORN RED (97)

cardiagn.com

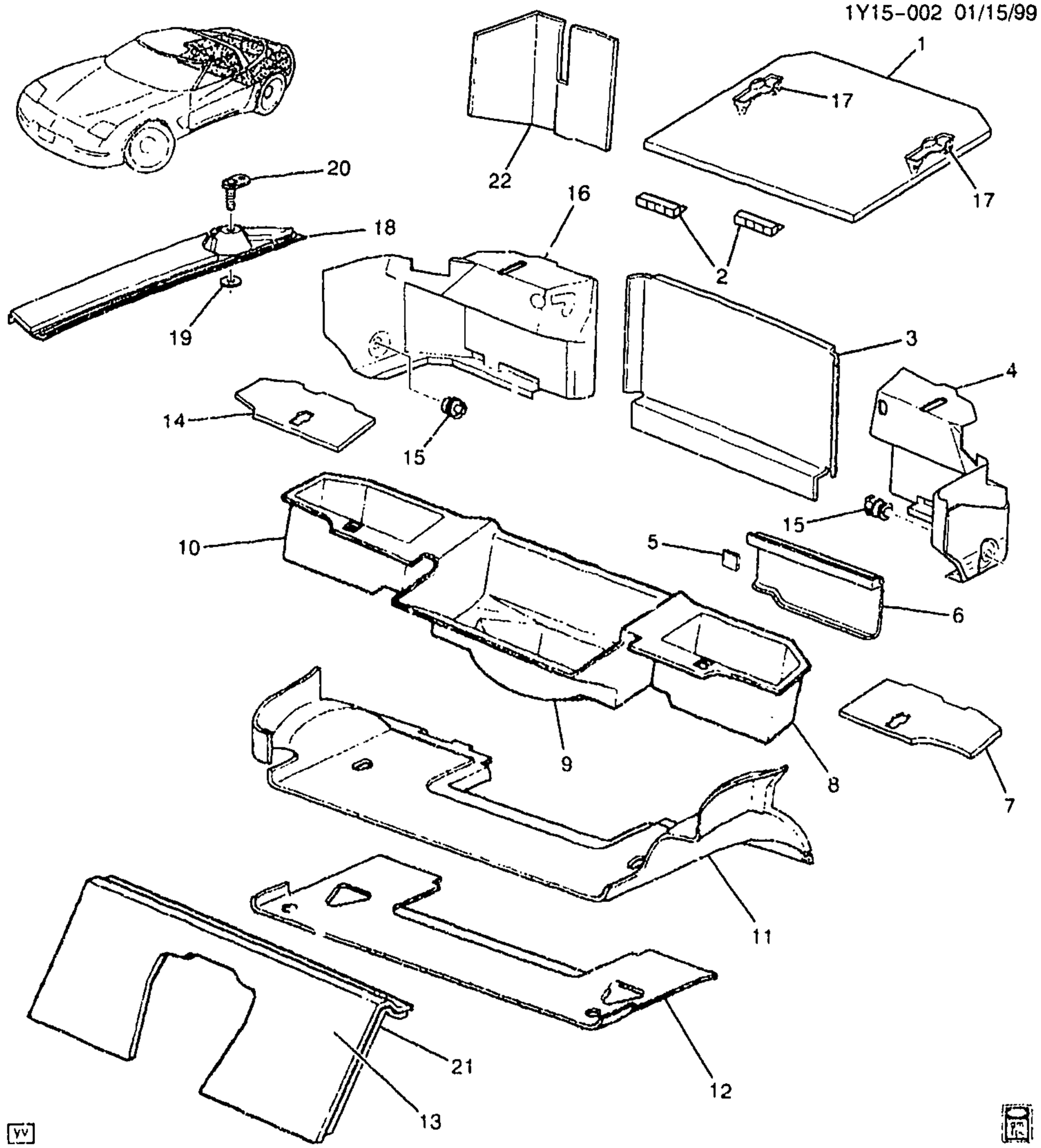

1Y15-002

1999-2000 Y07 CARPET/INTERIOR (RR FLOOR & COMPARTMENT)

1.	7-C7	15.222	COVER, R/CMPT FLR PNL STOW PKT ((INCLS 17) (RED)	99	Y07 (94I)	LH	10413532
	7-C7	15.222	COVER, R/CMPT FLR PNL STOW PKT ((INCLS 17) (RED)	99	Y07 (94I)	RH	10413536
	7-C7	15.222	COVER, R/CMPT FLR PNL STOW PKT ((INCLS 17) (BLACK)	99-00	Y07 (19I)	LH	10434927

cardiagn.com

	7-C7	15.222	COVER, R/CMPT FLR PNL STOW PKT ((INCLS 17) (GRAY)	99-00	Y07 (92I)	LH	10434928
	7-C7	15.222	COVER, R/CMPT FLR PNL STOW PKT ((INCLS 17) (BLACK)	99-00	Y07 (19I)	RH	10434933
	7-C7	15.222	COVER, R/CMPT FLR PNL STOW PKT ((INCLS 17) (PEWTER)	99-00	Y07 (92I)	RH	10434934
	7-C7	15.222	COVER, R/CMPT FLR PNL STOW PKT ((INCLS 17) (CAMEL) (CENTER)	99-00	Y07-67 (67I)	1	10413529
	7-C7	15.222	COVER, R/CMPT FLR PNL STOW PKT ((INCLS 17) (CAMEL)	99-00	Y07 (67I)	LH	10434930
	7-C7	15.222	COVER, R/CMPT FLR PNL STOW PKT ((INCLS 17) (CAMEL)	99-00	Y07 (67I)	RH	10434936
	7-C7	15.222	COVER, R/CMPT FLR PNL STOW PKT ((INCLS 17) (BLACK) (CENTER)	99-00	Y07-67 (19I)	1	10413526
	7-C7	15.222	COVER, R/CMPT FLR PNL STOW PKT ((INCLS 17) (GRAY) (CENTER)	99-00	Y07-67 (92I)	1	10413527
	7-C7	15.222	COVER, R/CMPT FLR PNL STOW PKT ((INCLS 17) (RED) (CENTER)	99	Y07-67 (94I)	1	10413528
	7-C7	15.222	COVER, R/CMPT FLR PNL STOW PKT ((INCLS 17) (RED) (CENTER)	00	Y07-67 (70I)	1	10409413
	7-C7	15.222	COVER, R/CMPT FLR PNL STOW PKT ((INCLS 17) (RED)	00	Y07 (70I)	LH	10434926
	7-C7	15.222	COVER, R/CMPT FLR PNL STOW PKT ((INCLS 17) (RED)	00	Y07 (70I)	RH	10434932
2.		N.S.	RETAINER, R/CMPT PNL STOW PKT CVR		.....		
3.	7-C7	15.222	CARPET, R/END TR FIN PNL. CTR (RED) (15.286)	99	Y07 (94I)	1	10275976
	7-C7	15.222	CARPET, R/END TR FIN PNL CTR (BLACK)	99-00	Y07 (19I)	1	10445783
	7-C7	15.222	CARPET, R/END TR FIN PNL CTR (PEWTER)	99-00	Y07 (92I)	1	10445784
	7-C7	15.222	CARPET, R/END TR FIN PNL CTR (OAK)	99-00	Y07 (67I)	1	10445785
	7-C7	15.222	CARPET, R/END TR FIN PNL CTR (RED)	00	Y07 (70I)	1	10445786
4.	7-C7	15.222	CARPET, R/END TR FIN PNL OTR (PEWTER) (WHEN REPLACING 99 AND PRIOR CANCELLED PARTS, MUST REMOVE EXISTING INSULATOR AS THE INSULATOR IS ALREADY PART OF THE NEW CARPET) ...	99-00	Y07 (92I)	LH	10435605
	7-C7	15.222	CARPET, R/END TR FIN PNL OTR (BLACK) (WHEN REPLACING 99 AND PRIOR CANCELLED PARTS, MUST REMOVE EXISTING INSULATOR AS THE INSULATOR IS ALREADY PART OF THE NEW CARPET) ...	99-00	Y07 (19I)	LH	10435605

cardiagn.com

	7-C7	15.222	CARPET, R/END TR FIN PNL OTR (CAMEL) (WHEN REPLACING 99 AND PRIOR CANCELLED PARTS, MUST REMOVE EXISTING INSULATOR AS THE INSULATOR IS ALREADY PART OF THE NEW CARPET) ...	99-00	Y07 (67I)	LH	10435608
	7-C7	15.222	CARPET, R/END TR FIN PNL OTR (RED)	00	Y07 (70I)	LH	10435609
	7-C7	15.222	CARPET, R/END TR FIN PNL OTR (OUTER) (RED) (15.286)	99	Y07 (94I)	LH	10275955
5.	7-N2	7.450	RETAINER, ELEC SUSP CONT MDL FIN CVR (PART OF 6) (14.640)	99-00	Y07 (F45)	1	10267772
6.	7-N2	7.450	COVER, ELEK SUSP CONT MDL FIN (INCLS 5)	99-00	Y07-67 (F45)	LH	10286260
7.	7-C7	15.222	COVER, R/CMPT FLR PNL STOW PKT (RED)	99	Y07 (94I)	LH	10413532
	7-C7	15.222	COVER, R/CMPT FLR PNL STOW PKT (BLACK)	99-00	Y07 (19I)	LH	10434927
	7-C7	15.222	COVER, R/CMPT FLR PNL STOW PKT (GRAY)	99-00	Y07 (92I)	LH	10434928
	7-C7	15.222	COVER, R/CMPT FLR PNL STOW PKT (CAMEL)	99-00	Y07 (67I)	LH	10434930
	7-C7	15.222	COVER, R/CMPT FLR PNL STOW PKT (RED)	00	Y07 (70I)	LH	10434926
8.		N.S.	TRIM, R/CMPT PNL STOW PKT (PART OF 9)		.....	LH	
9.	7-C7	15.222	TRIM, R/CMPT FLR PNL STOW PKT (INCL 8, 10) (GRAY)	99-00	Y07-67 (EXC F45, U1S)	1	10292411
	7-C7	15.222	TRIM, R/CMPT FLR PNL STOW PKT (INCL 8, 10) (GRAY)	99-00	Y07-67 (U1S) (EXC F45)	1	10292412
	7-C7	15.222	TRIM, R/CMPT FLR PNL STOW PKT (INCL 8, 10) (GRAY)	99-00	Y07-67 (F45) (EXC U1S)	1	10292413
	7-C7	15.222	TRIM, R/CMPT FLR PNL STOW PKT (INCL 8, 10) (GRAY)	99-00	Y07-67 (F45, U1S)	1	10292414
10.		N.S.	TRIM, R/CMPT FLR PNL STOW PKT (PART OF 9)		.....		
11.	7-C7	15.222	CARPET, R/CMPT FLR PNL (INCLS 12) (BLACK) (WHEN REPLACING 99 AND PRIOR CANCELLED PARTS, MUST REMOVE EXISTING INSULATOR AS THE INSULATOR IS ALREADY PART OF THE NEW CARPET) ...	99-00	Y07 (19I)	1	10433845
	7-C7	15.222	CARPET, R/CMPT FLR PNL (INCLS 12) (PEWTER) (WHEN REPLACING 99 AND PRIOR CANCELLED PARTS, MUST REMOVE EXISTING INSULATOR AS THE INSULATOR IS ALREADY PART OF THE NEW CARPET) ...	99-00	Y07 (92I)	1	10433846
	7-C7	15.222	CARPET, R/CMPT FLR PNL (INCLS 12) (RED)	99	Y07 (94I)	1	104)847

cardiagn.com

	7-C7	15.222	CARPET, R/CMPT FLR PNL (INCLS 12) (CAMEL) (WHEN REPLACING 99 AND PRIOR CANCELLED PARTS, MUST REMOVE EXISTING INSULATOR AS THE INSULATOR IS ALREADY PART OF THE NEW CARPET) ...	99-00	Y07 (67I)	1	10433848
	7-C7	15.222	CARPET, R/CMPT FLR PNL (INCLS 12) (RED) (WHEN REPLACING 99 AND PRIOR CANCELLED PARTS, MUST REMOVE EXISTING INSULATOR AS THE INSULATOR IS ALREADY PART OF THE NEW CARPET) ...	00	Y07 (70I)	1	10433849
12.	7-N25	12.981	INSULATOR, R/FLR PNL CTR (PART OF 11) (54" WIDE, SOLD BY THE FOOT, CUT AS REQ) (15.492)	99-00	Y07	1	20464593
13.	7-N11	11.358	CARPET, F/SEAT BK BODY PNL (INCLS 21) (BLACK)	99-00	Y07 (19I)	1	10272042
	7-N11	11.358	CARPET, F/SEAT BK BODY PNL (INCLS 21) (PEWTER)	99-00	Y07 (92I)	1	10273214
	7-N11	11.358	CARPET, F/SEAT BK BODY PNL (INCLS 21) (RED)	99	Y07 (94I)	1	10273215
	7-N11	11.358	CARPET, F/SEAT BK BODY PNL (INCLS 21) (CAMEL)	99-00	Y07 (67I)	1	10285180
	7-N11	11.358	CARPET, F/SEAT BK BODY PNL (INCLS 21) (RED)	00	Y07 (70I)	1	10409427
14.	7-C7	15.222	COVER, R/CMPT FLR PNL STOW PKT (RED)	99	Y07 (94I)	RH	10413536
	7-C7	15.222	COVER, R/CMPT FLR PNL STOW PKT (BLACK)	99-00	Y07 (19I)	RH	10434933
	7-C7	15.222	COVER, R/CMPT FLR PNL STOW PKT (PEWTER)	99-00	Y07 (92I)	RH	10434934
	7-C7	15.222	COVER, R/CMPT FLR PNL STOW PKT (CAMEL)	99-00	Y07 (67I)	RH	10434936
	7-C7	15.222	COVER, R/CMPT FLR PNL STOW PKT (RED)	00	Y07 (70I)	RH	10434932
15.	7-C7	15.222	NUT, CONVENIENCE NET	99-00	Y07	2	10285966
16.	7-C7	15.222	CARPET, R/END TR FIN PNL OTR (PEWTER)	99-00	Y07 (92I)	RH	10432588
	7-C7	15.222	CARPET, R/END TR FIN PNL OTR (RED)	99	Y07 (94I)	RH	10432592
	7-C7	15.222	CARPET, R/END TR FIN PNL OTR (BLACK)	99-00	Y07 (19I)	RH	10435612
	7-C7	15.222	CARPET, R/END TR FIN PNL OTR (CAMEL)	99-00	Y07 (67I)	RH	10435614
	7-C7	15.222	CARPET, R/END TR FIN PNL OTR (RED)	00	Y07 (70I)	RH	10435615
17.	7-N25	12.977	LATCH, FLR K/UP PNL CPT (PART OF 1)	99-00	Y	2	10290666
18.	7-C7	15.222	INSULATOR, R/CMPT PNL FRM SI	99-00	Y07 (EXC VD1)	LH	10401944
	7-C7	15.222	INSULATOR, R/CMPT PNL FRM SI	99-00	Y07	RH	10401945
19.		8.921	NUT, PUSH-ON, M6X1, SPR STL, STYLE 1, POR (BODY S/PNL)	99-00	.....	2	14093869

cardiagn.com

20.	7–C7	15.222	PLATE, CONVENIENCE NET UPR STUD (POSN #2) (4.785) . . .	99–00	Y07	2	10404603
21.	7–N12	11.373	INSULATOR, F/SEAT BK BODY PNL (PART OF 13) (15.492)	99–00	Y07	1	20464592
22.	7–N25	12.966	INSULATOR, R/END PNL (54" WIDE, SOLD BY THE FOOT, CUT AS REQ) (15.492)	99–00	Y07	2	20464593

RPO DEFINITIONS
F45 – CHASSIS CONTINUOUS VALVE REAL TIME DAMPING
U1S – PLAYER MULTIPLE COMPACT DISC
VD1 – PROVISION OPTIONS,EUROPE(EXPORT)
19I – INTERIOR TRIM,BLACK
67I – INTERIOR TRIM,CAMEL
70I – INTERIOR TRIM,TORCH RED
92I – INTERIOR TRIM SHALE/PEWTER
94I – INTERIOR TRIM FIRETHORN RED (97)

cardiagn.com

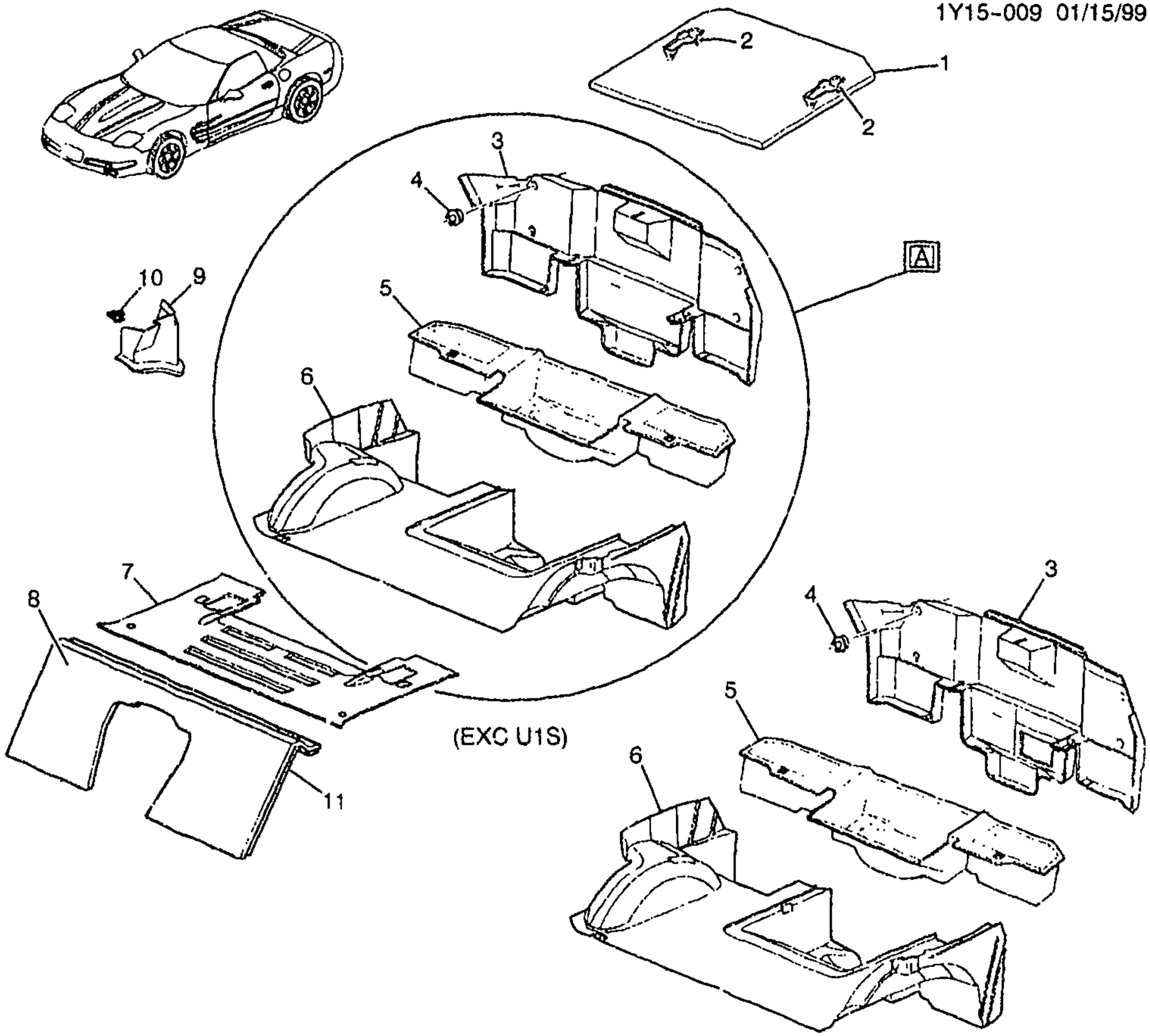

1Y15-009

1999-2000 Y37 CARPET/INTERIOR (RR FLOOR & COMPARTMENT)

1.	7-C7	15.222	COVER, R/CMPT FLR PNL STOW PKT (INCLS 2) (BLACK) (CENTER)	99-00	Y37 (19I)	1	10413546
2.	7-C7	15.222	LATCH, R/CMPT PNL STOW PKT CVR (PART OF 1) (12.977)	99-00	Y37-67	2	10290666
3.	7-C7	15.222	TRIM, R/CMPT RR PNL (BLACK)	99-00	Y37	1	10299182
4.	7-C7	15.222	NUT, CONVENIENCE NET	99-00	Y37	4	10285966
	7-C7	15.222	NET, CONVENIENCE	99-00	Y37 (AP9)	1	10405356
5.		N.S.	TRIM, R/CMPT FLR PNL STOW PKT (PART OF 6)				
6.	7-C7	15.222	TRIM, R/CMPT FLR PNL (INCLS 5)	99	Y37	1	10402712

cardiagn.com

	7–C7	15.222	TRIM, R/CMPT FLR PNL (INCLS 5)	00	Y37	1	10444221
7.	7–N25	12.981	INSULATOR, R/FLR PNL CTR (15.492)	99–00	Y37	1	20464592
8.	7–N11	11.358	CARPET, F/SEAT BK BODY PNL (BLACK)	99	Y37 (19I)	1	10419553
	7–N11	11.358	CARPET, F/SEAT BK BODY PNL (BLACK)	00	Y37 (19I)	1	10431952
9.	7–C7	15.222	TRIM, R/CMPT PNL FRM SUPT	99–00	Y37	LH	10427808
	7–C7	15.222	TRIM, R/CMPT PNL FRM SUPT	99–00	Y37	RH	10427809
10.	7–N25	12.981	RETAINER, R/CMPT PNL FRM SUPT TR (13.0MM WIDE) (YELLOW) (U–BASE) (16.575)	99–00	Y37–67	4	15748479
11.	7–N12	11.373	INSULATOR, F/SEAT BK BODY PNL (15.492)	99–00	Y37	1	20464592

RPO DEFINITIONS
AP9 – NET,CONVENIENCE
19I – INTERIOR TRIM,BLACK

cardiagn.com

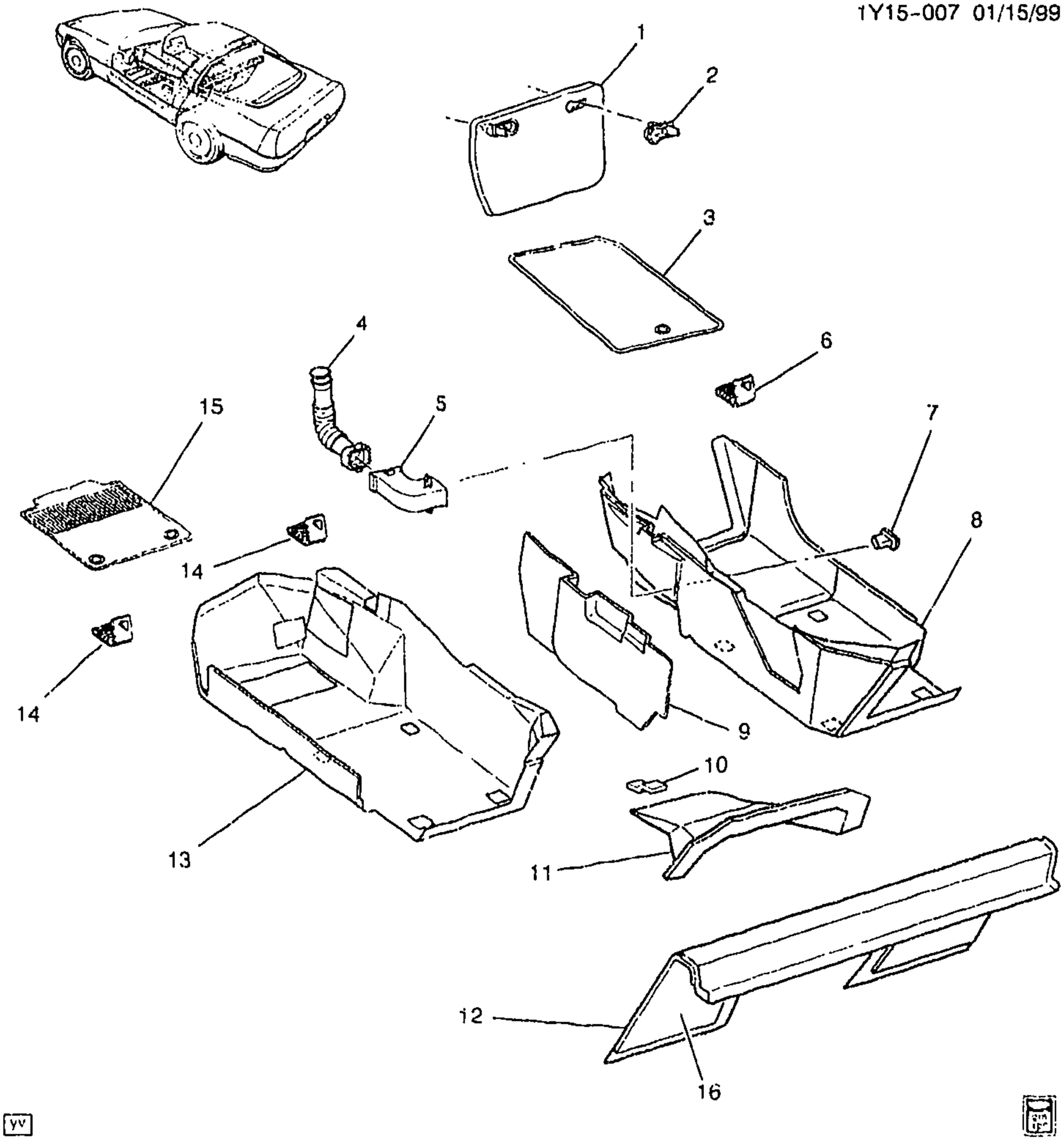

1Y15-0071

1999-2002 Y37 CARPET/INTERIOR (FRONT FLOOR)

1.	7-C13	15.286	CARPET, FLR K/UP PNL (INCLS 2) (BLACK)	99-00	Y (19I)	1	10290668
	7-C13	15.286	CARPET, FLR K/UP PNL (INCLS 2) (BLACK)	01	Y37 (19I, 70I)	1	10290668
	7-C13	15.286	CARPET, FLR K/UP PNL (INCLS 2) (BLACK)	02	Y37 (19I, 70I)	1	10314495
2.	7-N25	12.977	LATCH, FLR K/UP PNL CPT (PART OF 1)	99-02	Y	2	10290666

cardiagn.com

3.	7-M13	21.360 A	MAT PKG, F/FLR AUX (TWIN-CPT) (BLACK) (NO LOGO) (15.286)	99-00	Y (19I)	1	12371230
	7-M13	21.360 A	MAT PKG, F/FLR AUX (TWIN-CPT) (BLACK) (NO LOGO) (15.286)	01-02	Y37 (19I, 70I)	1	12371230
4.	7-N3	9.262	DUCT, FLR AIR OTLT RR (RIGHT SIDE ONLY)	99-02	Y	RH	10283464
5.	7-N3	9.262	OUTLET, FLR AIR INR HALF (BLACK)	99-00	Y (19I)	1	10403256
	7-N3	9.262	OUTLET, FLR AIR INR HALF (BLACK)	01-02	Y37 (19I, 70I)	1	10403256
6.	7-C14	15.300	HOOK, F/FLR CPT (PART OF 8)	99-02	Y	RH	10275204
7.	7-N3	9.262	OUTLET, FLR AIR OTR HALF (BLACK)	99-00	Y (19I)	1	10414489
	7-N3	9.262	OUTLET, FLR AIR OTR HALF (BLACK)	01-02	Y37 (19I, 70I)	1	10414489
8.	7-C13	15.286	CARPET, F/FLR PNL (INCLS 6) (BLACK)	99-00	Y (19I)	RH	10412806
	7-C13	15.286	CARPET, F/FLR PNL (INCLS 6) (BLACK)	01-02	Y37 (19I, 70I)	RH	10412806
9.	7-N25	12.980	INSULATOR, FLR PNL FRT (RH ONLY)	99-02	Y	1	10285633
10.		N.S.	RETAINER, FLR FRT INSL				
11.	7-N25	12.980	INSULATOR, FLR PNL FRT CTR (54" WIDE, SOLD BY THE FOOT, CUT AS REQ) (15.492)	99-02	Y	1	20464593
12.	7-N11	11.358	CARPET, F/SEAT BK BODY PNL (BLACK)	99	Y37 (19I)	1	10419553
	7-N11	11.358	CARPET, F/SEAT BK BODY PNL (BLACK)	00-02	Y37 (19I)	1	10431952
13.	7-C13	15.286	CARPET, F/FLR PNL (BLACK)	99-00	Y (19I)	LH	10412799
	7-C13	15.286	CARPET, F/FLR PNL (BLACK)	01-02	Y37 (19I, 70I)	LH	10412799
14.	7-C14	15.300	HOOK, F/FLR CPT (PART OF 13)	99-02	Y	LH	10275204
15.	7-M13	21.360 A	MAT PKG, F/FLR AUX (TWIN-CPT) (BLACK) (NO LOGO) (15.286)	99-00	Y (19I)	1	12371230
	7-M13	21.360 A	MAT PKG, F/FLR AUX (TWIN-CPT) (BLACK) (NO LOGO) (15.286)	01-02	Y37 (19I, 70I)	1	12371230
16.	7-N12	11.373	INSULATOR, F/SEAT BK BODY PNL (15.492)	99-02	Y37	1	20464592

RPO DEFINITIONS
19I – INTERIOR TRIM,BLACK
70I – INTERIOR TRIM,TORCH RED

cardiagn.com

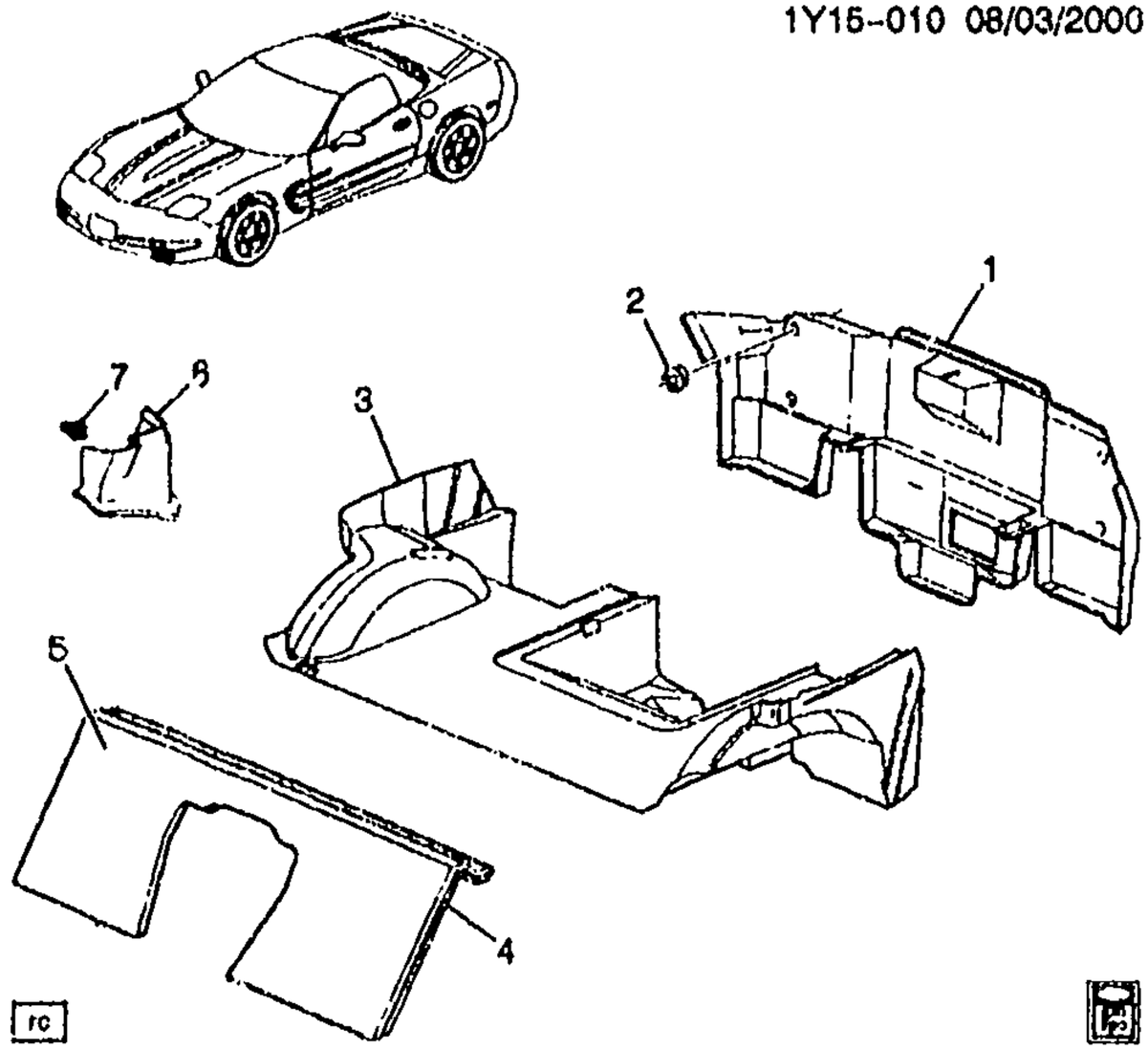

1Y15--010

2001-2002 Y37 CARPET, INTERIOR (RR FLOOR & COMPARTMENT)

1.	7-C7	15.222	TRIM, R/CMPT RR PNL	01-02	Y37	1	10434785
2.	7-C7	15.222	NUT, CONVENIENCE NET	01-02	Y37	4	10285966
3.	7-C7	15.222	TRIM, R/CMPT FLR PNL	01-02	Y37	1	10422924
4.	7-N12	11.373	INSULATOR, F/SEAT BK BODY PNL (15.492)	01-02	Y37	1	20464592
5.	7-N11	11.358	CARPET, F/SEAT BK BODY PNL (BLACK)	01-02	Y37 (19I)	1	10431952
6.	7-C7	15.222	TRIM, R/CMPT PNL FRM SUPT	01-02	Y37	LH	10427808
	7-C7	15.222	TRIM, R/CMPT PNL FRM SUPT	01-02	Y37	RH	10427809
7.	7-N25	12.981	RETAINER, R/CMPT PNL FRM SUPT TR (13.0MM WIDE) (YELLOW) (U-BASE) (16.575)	01-02	Y37-67	4	15748479

RPO DEFINITIONS

19I -- INTERIOR TRIM,BLACK

cardiagn.com

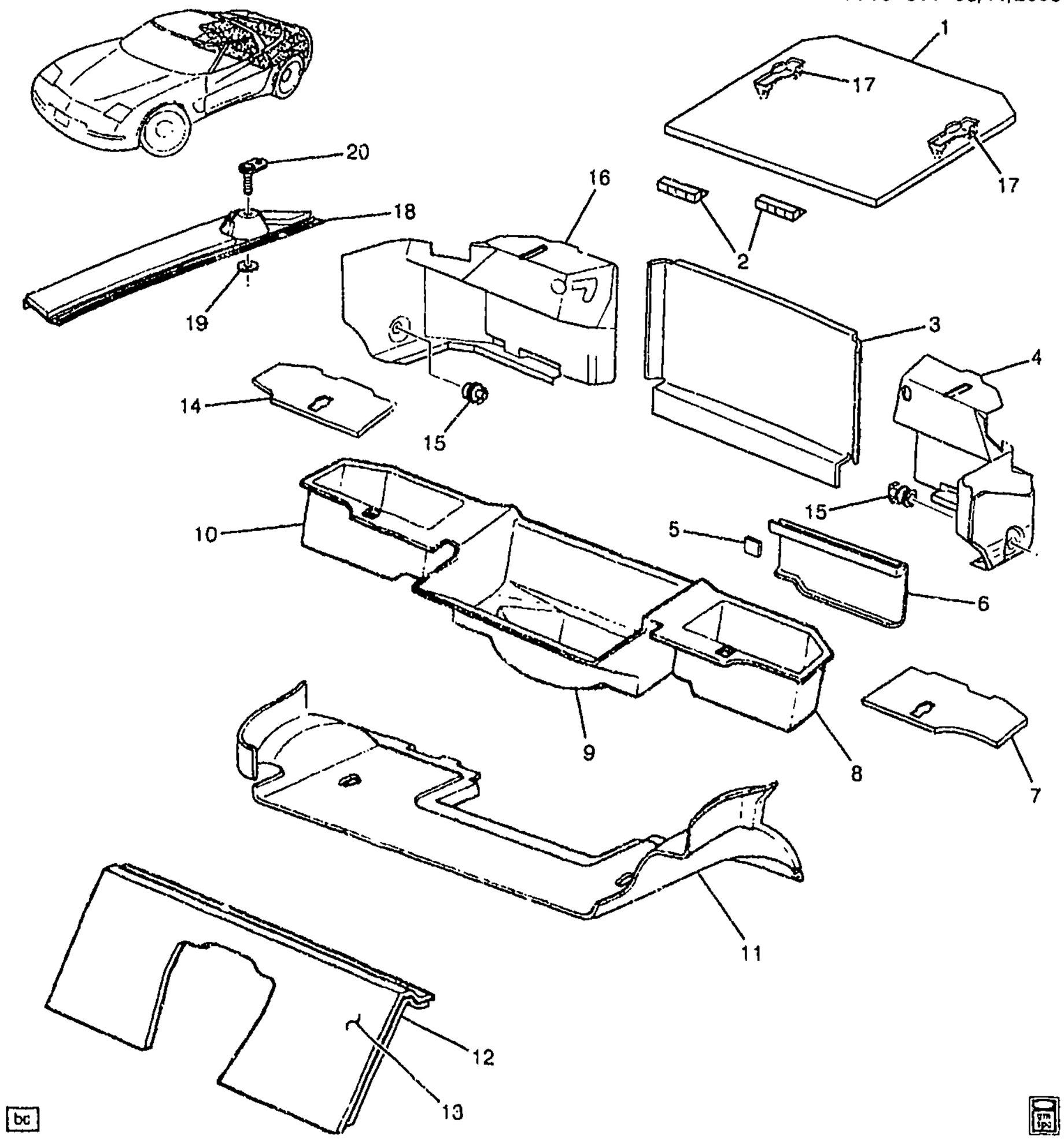

1Y15-011

2001-2002 Y07 CARPET/INTERIOR (RR FLOOR & COMPARTMENT)

1.	7-C7	15.222	COVER, R/CMPT FLR PNL STOW PKT ((INCLS 17) (BLACK)	01-02	Y07 (19I)	LH	10434927
	7-C7	15.222	COVER, R/CMPT FLR PNL STOW PKT ((INCLS 17) (GRAY)	01-02	Y07 (92I)	LH	10434928
	7-C7	15.222	COVER, R/CMPT FLR PNL STOW PKT ((INCLS 17) (BLACK)	01-02	Y07 (19I)	RH	10434933

cardiagn.com

							1Y15–011
	7–C7	15.222	COVER, R/CMPT FLR PNL STOW PKT ((INCLS 17) (PEWTER)	01–02	Y07 (92I)	RH	10434934
	7–C7	15.222	COVER, R/CMPT FLR PNL STOW PKT ((INCLS 17) (CAMEL)	01–02	Y07 (67I)	LH	10434930
	7–C7	15.222	COVER, R/CMPT FLR PNL STOW PKT ((INCLS 17) (CAMEL)	01–02	Y07 (67I)	RH	10434936
	7–C7	15.222	COVER, R/CMPT FLR PNL STOW PKT ((INCLS 17) (RED)	01–02	Y07 (70I)	LH	10434926
	7–C7	15.222	COVER, R/CMPT FLR PNL STOW PKT ((INCLS 17) (RED)	01–02	Y07 (70I)	RH	10434932
	7–C7	15.222	COVER, R/CMPT FLR PNL STOW PKT ((INCLS 17) (RED) (CENTER)	01–02	Y07 (70I)	1	10409413
	7–C7	15.222	COVER, R/CMPT FLR PNL STOW PKT ((INCLS 17) (BLACK) (CENTER)	01–02	Y07 (19I)	1	10413526
	7–C7	15.222	COVER, R/CMPT FLR PNL STOW PKT ((INCLS 17) (GRAY) (CENTER)	01–02	Y07 (92I)	1	10413527
	7–C7	15.222	COVER, R/CMPT FLR PNL STOW PKT ((INCLS 17) (CAMEL) (CENTER)	01–02	Y07 (67I)	1	10413529
2.		N.S.	RETAINER, R/CMPT PNL STOW PKT CVR		.....		
3.	7–C7	15.222	CARPET, R/END TR FIN PNL CTR (BLACK)	01–02	Y07 (19I)	1	10445783
	7–C7	15.222	CARPET, R/END TR FIN PNL CTR (PEWTER)	01–02	Y07 (92I)	1	10445784
	7–C7	15.222	CARPET, R/END TR FIN PNL CTR (OAK)	01–02	Y07 (67I)	1	10445785
	7–C7	15.222	CARPET, R/END TR FIN PNL CTR (RED)	01–02	Y07 (70I)	1	10445786
4.	7–C7	15.222	CARPET, R/END TR FIN PNL OTR (PEWTER) (WHEN REPLACING 99 AND PRIOR CANCELLED PARTS, MUST REMOVE EXISTING INSULATOR AS THE INSULATOR IS ALREADY PART OF THE NEW CARPET) ...	01–02	Y07 (92I)	LH	10435605
	7–C7	15.222	CARPET, R/END TR FIN PNL OTR (BLACK) (WHEN REPLACING 99 AND PRIOR CANCELLED PARTS, MUST REMOVE EXISTING INSULATOR AS THE INSULATOR IS ALREADY PART OF THE NEW CARPET) ...	01–02	Y07 (19I)	LH	10435606
	7–C7	15.222	CARPET, R/END TR FIN PNL OTR (CAMEL) (WHEN REPLACING 99 AND PRIOR CANCELLED PARTS, MUST REMOVE EXISTING INSULATOR AS THE INSULATOR IS ALREADY PART OF THE NEW CARPET) ...	01–02	Y07 (67I)	LH	10435608
	7–C7	15.222	CARPET, R/END TR FIN PNL OTR (RED)	01–02	Y07 (70I)	LH	10435609
5.	7–N2	7.450	RETAINER, ELEC SUSP CONT MDL FIN CVR (PART OF 6) (14.640)	01–02	Y07 (F45)	1	10267772

cardiagn.com

							1Y15-011
6.	7-N2	7.450	COVER, ELEK SUSP CONT MDL FIN (INCLS 5)	01-02	Y07 (F45)	LH	10286260
7.	7-C7	15.222	COVER, R/CMPT FLR PNL STOW PKT (BLACK)	01-02	Y07 (19I)	LH	10434927
	7-C7	15.222	COVER, R/CMPT FLR PNL STOW PKT (GRAY)	01-02	Y07 (92I)	LH	10434928
	7-C7	15.222	COVER, R/CMPT FLR PNL STOW PKT (CAMEL)	01-02	Y07 (67I)	LH	10434930
	7-C7	15.222	COVER, R/CMPT FLR PNL STOW PKT (RED)	01-02	Y07 (70I)	LH	10434926
8.		N.S.	TRIM, R/CMPT PNL STOW PKT (PART OF 9)		.....	LH	
9.	7-C7	15.222	TRIM, R/CMPT FLR PNL STOW PKT (INCL 8, 10) (GRAY)	01-02	Y07 (EXC F45, U1S) ...	1	10292411
	7-C7	15.222	TRIM, R/CMPT FLR PNL STOW PKT (INCL 8, 10) (GRAY)	01-02	Y07 (U1S) (EXC F45) ..	1	10292412
	7-C7	15.222	TRIM, R/CMPT FLR PNL STOW PKT (INCL 8, 10) (GRAY)	01-02	Y07 (F45) (EXC U1S) ..	1	10292413
	7-C7	15.222	TRIM, R/CMPT FLR PNL STOW PKT (INCL 8, 10) (GRAY)	01-02	Y07 (F45, U1S)	1	10292414
10.		N.S.	TRIM, R/CMPT FLR PNL STOW PKT (PART OF 9)		.....		
11.	7-C7	15.222	CARPET, R/CMPT FLR PNL (INCLS 12) (BLACK) (WHEN REPLACING 99 AND PRIOR CANCELLED PARTS, MUST REMOVE EXISTING INSULATOR AS THE INSULATOR IS ALREADY PART OF THE NEW CARPET) ...	01-02	Y07 (19I)	1	10433845
	7-C7	15.222	CARPET, R/CMPT FLR PNL (INCLS 12) (PEWTER) (WHEN REPLACING 99 AND PRIOR CANCELLED PARTS, MUST REMOVE EXISTING INSULATOR AS THE INSULATOR IS ALREADY PART OF THE NEW CARPET) ...	01-02	Y07 (92I)	1	10433846
	7-C7	15.222	CARPET, R/CMPT FLR PNL (INCLS 12) (CAMEL) (WHEN REPLACING 99 AND PRIOR CANCELLED PARTS, MUST REMOVE EXISTING INSULATOR AS THE INSULATOR IS ALREADY PART OF THE NEW CARPET) ...	01-02	Y07 (67I)	1	10433848
	7-C7	15.222	CARPET, R/CMPT FLR PNL (INCLS 12) (RED) (WHEN REPLACING 99 AND PRIOR CANCELLED PARTS, MUST REMOVE EXISTING INSULATOR AS THE INSULATOR IS ALREADY PART OF THE NEW CARPET) ...	01-02	Y07 (70I)	1	10433849
12.	7-N12	11.373	INSULATOR, F/SEAT BK BODY PNL (PART OF 13) (15.492)	01-02	Y07	1	20464592
13.	7-N11	11.358	CARPET, F/SEAT BK BODY PNL (INCLS 13) (BLACK)	01-02	Y07 (19I)	1	10272042
	7-N11	11.358	CARPET, F/SEAT BK BODY PNL (INCLS 13) (PEWTER)	01-02	Y07 (92I)	1	10273214
	7-N11	11.358	CARPET, F/SEAT BK BODY PNL (INCLS 13) (CAMEL)	01-02	Y07 (67I)	1	10285180

cardiagn.com

							1Y15-011
	7-N11	11.358	CARPET, F/SEAT BK BODY PNL (INCLS 13) (RED)	01-02	Y07 (70I)	1	10409427
14.	7-C7	15.222	COVER, R/CMPT FLR PNL STOW PKT (BLACK)	01-02	Y07 (19I)	RH	10434933
	7-C7	15.222	COVER, R/CMPT FLR PNL STOW PKT (PEWTER)	01-02	Y07 (92I)	RH	10434934
	7-C7	15.222	COVER, R/CMPT FLR PNL STOW PKT (CAMEL)	01-02	Y07 (67I)	RH	10434936
	7-C7	15.222	COVER, R/CMPT FLR PNL STOW PKT (RED)	01-02	Y07 (70I)	RH	10434932
15.	7-C7	15.222	NUT, CONVENIENCE NET	01-02	Y07	2	10285966
16.	7-C7	15.222	CARPET, R/END TR FIN PNL OTR (PEWTER)	01-02	Y07 (92I)	RH	10432588
	7-C7	15.222	CARPET, R/END TR FIN PNL OTR (BLACK)	01-02	Y07 (19I)	RH	10435612
	7-C7	15.222	CARPET, R/END TR FIN PNL OTR (CAMEL)	01-02	Y07 (67I)	RH	10435614
	7-C7	15.222	CARPET, R/END TR FIN PNL OTR (RED)	01-02	Y07 (70I)	RH	10435615
17.	7-N25	12.977	LATCH, FLR K/UP PNL CPT (PART OF 1)	01-02	Y	2	10290666
18.	7-C7	15.222	INSULATOR, R/CMPT PNL FRM SI	01-02	Y07 (EXC VD1)	LH	10401944
	7-C7	15.222	INSULATOR, R/CMPT PNL FRM SI	01-02	Y07	RH	10401945
19.		8.921	NUT, PUSH-ON, M6X1, SPR STL, STYLE 1, POR (BODY S/PNL)	01-02	.....	2	14093869
20.	7-C7	15.222	PLATE, CONVENIENCE NET UPR STUD (POSN #2) (4.785) ...	01-02	Y07	2	10404603

RPO DEFINITIONS
F45 – CHASSIS CONTINUOUS VALVE REAL TIME DAMPING
U1S – PLAYER MULTIPLE COMPACT DISC
VD1 – PROVISION OPTIONS,EUROPE(EXPORT)
19I – INTERIOR TRIM,BLACK
67I – INTERIOR TRIM,CAMEL
70I – INTERIOR TRIM,TORCH RED
92I – INTERIOR TRIM SHALE/PEWTER

cardiagn.com

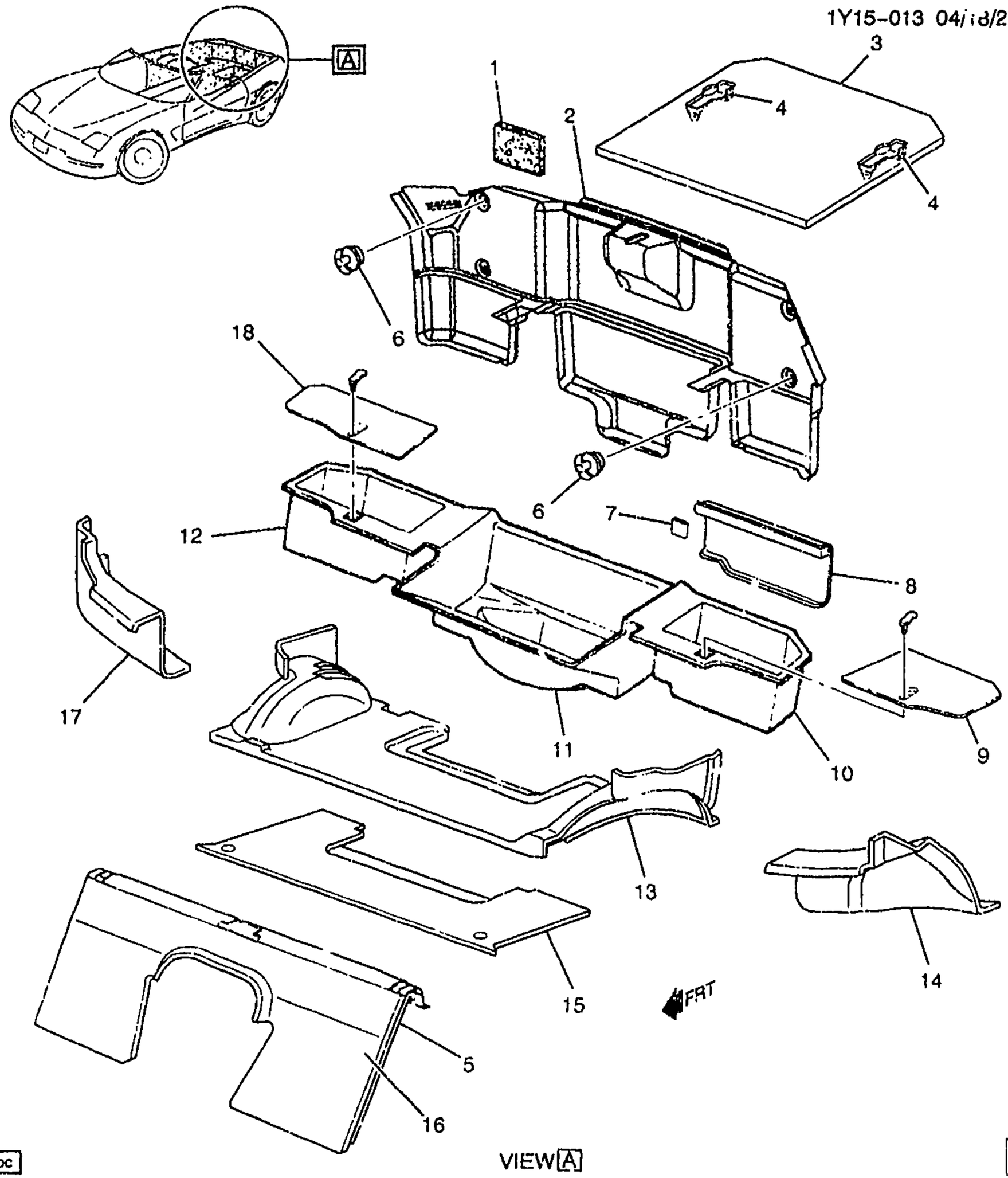

bc

1Y15-013

2001-2002 Y67 CARPET/INTERIOR (RR FLOOR & COMPARTMENT)

1.	8.958	VELCRO, (HOOK) 25.4MMX25 YD ROLL LOW CYCLE HIGH STRENGTH (R/CMPT PNL CPT FSTN)	01-02	1	12520272

cardiagn.com

						1Y15-013	
2.	7-C7	15.222	TRIM, R/CMPT RR PNL (INCLS 1, 5) (BLACK)	01-02	Y67 (19I)	1	10299182
	7-C7	15.222	TRIM, R/CMPT RR PNL (INCLS 1, 5) (PEWTER)	01-02	Y67 (92I) (EXC U1S)	1	10439071
	7-C7	15.222	TRIM, R/CMPT RR PNL (INCLS 1, 5) (OAK)	01-02	Y67 (67I) (EXC U1S)	1	10439072
	7-C7	15.222	TRIM, R/CMPT RR PNL (INCLS 1, 5) (RED)	01-02	Y67 (70I) (EXC U1S)	1	10439073
	7-C7	15.222	TRIM, R/CMPT RR PNL (INCLS 1, 5) (PEWTER)	01-02	Y67 (U1S, 92I)	1	10439143
	7-C7	15.222	TRIM, R/CMPT RR PNL (INCLS 1, 5) (OAK)	01-02	Y67 (U1S, 67I)	1	10439144
	7-C7	15.222	TRIM, R/CMPT RR PNL (INCLS 1, 5) (RED)	01-02	Y67 (U1S, 70I)	1	10439145
3.	7-C7	15.222	COVER, R/CMPT FLR PNL STOW PKT (19I) (INCLS 4) (BLACK) (CENTER)	01-02	Y67	1	10413546
	7-C7	15.222	COVER, R/CMPT FLR PNL STOW PKT (92I) (INCLS 4) (PEWTER)	01-02	Y67	1	10439005
	7-C7	15.222	COVER, R/CMPT FLR PNL STOW PKT (67I) (INCLS 4) (OAK)	01-02	Y67	1	10439006
	7-C7	15.222	COVER, R/CMPT FLR PNL STOW PKT (70I) (INCLS 4) (RED) (CENTER)	01-02	Y67	1	10409413
4.	7-N25	12.977	LATCH, FLR K/UP PNL CPT (PART OF 3)	01-02	Y	2	10290666
5.		N.S.	INSULATOR, F/SEAT BK BODY PNL (PART OF 16)			1	
6.	7-C7	15.222	NUT, CONVENIENCE NET	01-02	Y67	4	10285966
	7-C7	15.222	NET, CONVENIENCE	01-02	Y67	1	10405356
7.	7-N2	7.450	RETAINER, ELEC SUSP CONT MDL FIN CVR (PART OF 8) (14.640)	01-02	Y67 (F45)	1	10267772
8.	7-N2	7.450	COVER, ELEK SUSP CONT MDL FIN (INCLS 7) (BLACK)	01-02	Y67 (F45, 19I)	1	10440580
	7-N2	7.450	COVER, ELEK SUSP CONT MDL FIN (INCLS 7) (PEWTER)	01-02	Y67 (F45, 92I)	1	10440581
	7-N2	7.450	COVER, ELEK SUSP CONT MDL FIN (INCLS 7) (OAK)	01-02	Y67 (F45, 67I)	1	10440582
	7-N2	7.450	COVER, ELEK SUSP CONT MDL FIN (INCLS 7) (RED)	01-02	Y67 (F45, 70I)	1	10440583
9.	7-C7	15.222	COVER, R/CMPT FLR PNL STOW PKT (BLACK)	01-02	Y67 (19I)	LH	10439014
	7-C7	15.222	COVER, R/CMPT FLR PNL STOW PKT (CAMEL)	01-02	Y67 (67I)	LH	10439016
	7-C7	15.222	COVER, R/CMPT FLR PNL STOW PKT (PEWTER)	01-02	Y67 (92I)	LH	10439015
	7-C7	15.222	COVER, R/CMPT FLR PNL STOW PKT (RED)	01-02	Y67 (70I)	LH	10439017
10.		N.S.	TRIM, R/CMPT PNL STOW PKT (PART OF 11)			LH	
11.		N.S.	TRIM, R/CMPT FLR PNL STOW PKT (INCLS 10, 12)				
12.		N.S.	TRIM, R/CMPT PNL STOW PKT (PART OF 11)			RH	
13.	7-C7	15.222	TRIM, R/CMPT FLR PNL (BLACK)	01-02	Y67 (19I) (EXC F45)	1	10438995
	7-C7	15.222	TRIM, R/CMPT FLR PNL (PEWTER)	01-02	Y67 (92I) (EXC F45)	1	10438996

cardiagn.com

							1Y15-013
	7-C7	15.222	TRIM, R/CMPT FLR PNL (OAK) ..	01-02	Y67 (67I) (EXC F45) ...	1	10438997
	7-C7	15.222	TRIM, R/CMPT FLR PNL (RED) ..	01-02	Y67 (70I) (EXC F45) ...	1	10438998
	7-C7	15.222	TRIM, R/CMPT FLR PNL (BLACK)	01-02	Y67 (F45, 19I)	1	10439000
	7-C7	15.222	TRIM, R/CMPT FLR PNL (PEWTER)	01-02	Y67 (F45, 92I)	1	10439001
	7-C7	15.222	TRIM, R/CMPT FLR PNL (OAK) ..	01-02	Y67 (F45, 67I)	1	10439002
	7-C7	15.222	TRIM, R/CMPT FLR PNL (RED) ..	01-02	Y67 (F45, 70I)	1	10439003
		8.958	VELCRO, (HOOK) 25.4MMX25 YD ROLL LOW CYCLE HIGH STRENGTH (PART OF R/CMPT FLR PNL TR)	01-02	.....	AR	12520272
14.	7-C6	15.100	CARPET, RR W/H & BODY L/PLR FIN PNL (BLACK)	01-02	Y67 (19I)	LH	10439062
	7-C6	15.100	CARPET, RR W/H & BODY L/PLR FIN PNL (PEWTER)	01-02	Y67 (92I)	LH	10439063
	7-C6	15.100	CARPET, RR W/H & BODY L/PLR FIN PNL (OAK)	01-02	Y67 (67I)	LH	10439064
	7-C6	15.100	CARPET, RR W/H & BODY L/PLR FIN PNL (RED)	01-02	Y67 (70I)	LH	10439065
15.		N.S.	INSULATOR, R/FLR PNL CTR ...		.....		
16.	7-N11	11.358	CARPET, F/SEAT BK BODY PNL (INCLS 20) (BLACK)	01-02	Y67 (19I)	1	10439078
	7-N11	11.358	CARPET, F/SEAT BK BODY PNL (INCLS 20) (PEWTER)	01-02	Y67 (92I)	1	10439079
	7-N11	11.358	CARPET, F/SEAT BK BODY PNL (INCLS 20) (OAK)	01-02	Y67 (67I)	1	10439080
	7-N11	11.358	CARPET, F/SEAT BK BODY PNL (INCLS 20) (RED)	01-02	Y67 (70I)	1	10439081
17.	7-C6	15.100	CARPET, RR W/H & BODY L/PLR FIN PNL (BLACK)	01-02	Y67 (19I)	RH	10439067
	7-C6	15.100	CARPET, RR W/H & BODY L/PLR FIN PNL (PEWTER)	01-02	Y67 (92I)	RH	10439068
	7-C6	15.100	CARPET, RR W/H & BODY L/PLR FIN PNL (OAK)	01-02	Y67 (67I)	RH	10439069
	7-C6	15.100	CARPET, RR W/H & BODY L/PLR FIN PNL (RED)	01-02	Y67 (70I)	RH	10439070
18.	7-C7	15.222	COVER, R/CMPT FLR PNL STOW PKT (BLACK)	01-02	Y67 (19I)	RH	10439031
	7-C7	15.222	COVER, R/CMPT FLR PNL STOW PKT (CAMEL)	01-02	Y67 (67I)	RH	10439033
	7-C7	15.222	COVER, R/CMPT FLR PNL STOW PKT (PEWTER)	01-02	Y67 (92I)	RH	10439032
	7-C7	15.222	COVER, R/CMPT FLR PNL STOW PKT (RED)	01-02	Y67 (70I)	RH	10439034

RPO DEFINITIONS
F45 – CHASSIS CONTINUOUS VALVE REAL TIME DAMPING
U1S – PLAYER MULTIPLE COMPACT DISC
19I – INTERIOR TRIM,BLACK
67I – INTERIOR TRIM,CAMEL
70I – INTERIOR TRIM,TORCH RED
92I – INTERIOR TRIM SHALE/PEWTER

cardiagn.com

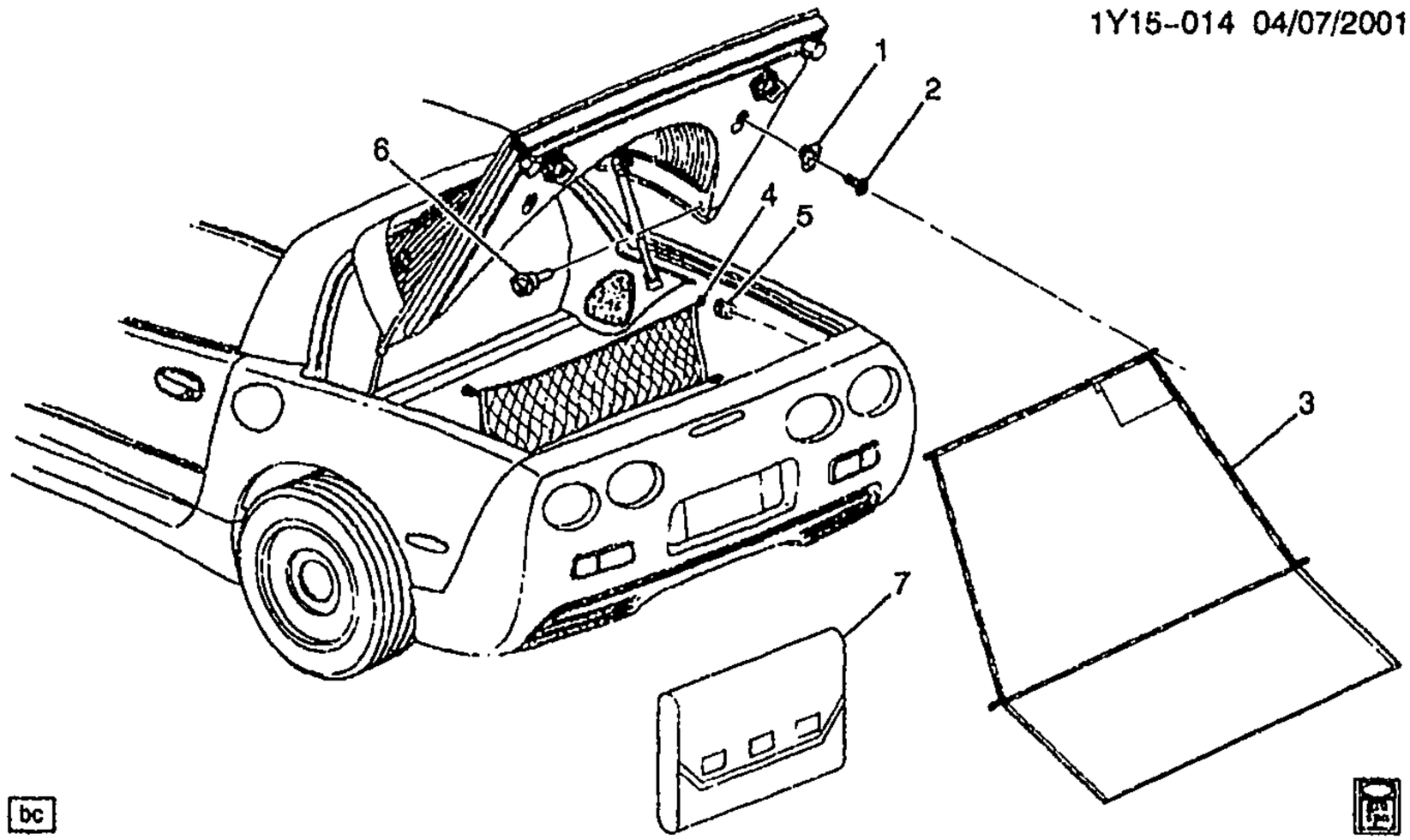

bc

1Y15-014

1999-2002 Y COVER/REAR COMPARTMENT & CONVENIENCE NET

1.	7-C6	15.024	SUPPORT, LUGG SHADE (RR)	99-02	Y07	2	10271944
2.		8.906	BOLT/SCREW, M6.0X1.0-20.0 TORX RD WA, GM6138M (LUGG SHADE SUPT)	99-02		AR	11517230
3.	7-C6	15.024	SHADE, LUGG (INCLS NET, SHADE, BAG)	99-02	Y07 (D42)	1	10269718
4.	7-C7	15.222	NET, CONVENIENCE	99-02	Y67	1	10405356
	7-C7	15.222	NET, CONVENIENCE	99-00	Y37 (AP9)	1	10405356
5.	7-C7	15.222	NUT, CONVENIENCE NET	99-02	Y07	2	10285966
	7-C7	15.222	NUT, CONVENIENCE NET	99-02	Y67	4	10285966
	7-C7	15.222	NUT, CONVENIENCE NET	99-02	Y37	4	10285966
6.	7-C6	15.024	RETAINER, LUGG SHADE (15.222)	99-02	Y07	2	10209685
7.		N.S.	BAG, CONVENIENCE				

RPO DEFINITIONS
AP9 – NET,CONVENIENCE
D42 – COVER,REAR COMPARTMENT SECURITY(SHADE)

cardiagn.com

14.060 SEAL, Bottom of Top Front Roof Rail to Windshield

98–02	Y67 CONV ROOF (C05)	12369660	1	129.00	SEAL, F/TOP FRT (14.130)	7–D4,2

14.080 BOLT – FASTENER KIT – STRIKER, Folding and Hard Top Front Rail

98–99	Y67	11516932	4	*.61	BOLT, F/TOP FRT LAT STKR (08.900)	
98–02	Y67 CONV ROOF (C05), (16T), VINYL TOP, DK ANTELOPE MET (67T)	10293378	4	*1.65	BOLT, R/TOP FRT LAT (12.810) ..	7–D4,26
98–02	Y67 CONV ROOF (C05)	12369642	1	62.50	FASTENER KIT, F/TOP FRT S/RL & RR S/RL	7–D4,17
98–02	Y67	10407419	LH	36.00	STRIKER, F/TOP FRT LAT	
98–02	Y67	10407420	RH	36.00	STRIKER, F/TOP FRT LAT	

14.100 RAIL, Folding Top Side

98–02	Y67 CONV ROOF (C05)	12369640	RH	208.00	RAIL, F/TOP SI	7–D4,17
98–02	Y67 CONV ROOF (C05)	12369641	LH	234.00	RAIL, F/TOP SI (14.140)	7–D4,17

14.102 CABLE, Folding Top Trim Hold Down

98–02	Y67 CONV ROOF (C05)	12369657	RH	43.75	CABLE, F/TOP CVR FRT SI TENS	7–D4,20
98–02	Y67 CONV ROOF (C05)	12369658	LH	43.75	CABLE, F/TOP CVR FRT SI TENS	7–D4,20

14.120 SEAL, Folding Top Side Roof Rail

01–02	YY67 CONV ROOF (C05)	88950457	1	3.45	SEAL, F/TOP SI (AT RL)	

14.130 BOW – FASTENER KIT, Folding Top Front Bow

98–02	Y67 CONV ROOF (C05)	12369624	1	690.00	BOW, F/TOP #1	7–D4,1
98–02	Y67 CONV ROOF (C05)	12369625	1	32.75	FASTENER KIT, F/TOP #1 BOW (14.340)	7–D4,1
98–02	Y67 CONV ROOF (C05)	12369661	1	29.50	FASTENER KIT, F/TOP FRT SEAL	7–D4,2

14.140 FASTENER KIT – LINK, Folding Top Side Roof Rail

98–02	Y67 CONV ROOF (C05)	12369627	1	32.75	FASTENER KIT, F/TOP #2 BOW & #3 BOW (14.340)	7–D4,3
98–02	Y67 CONV ROOF (C05)	12369639	1	42.50	FASTENER KIT, F/TOP FRT S/RL LINK	7–D4,16
98–02	Y67 CONV ROOF (C05)	12369637	RH	338.00	LINK, F/TOP #1 BOW	7–D4,16
98–02	Y67 CONV ROOF (C05)	12369638	LH	338.00	LINK, F/TOP #1 BOW	7–D4,16
01–02	YY67 CONV ROOF (C05), (16T)	88950132	1	313.00	LINK, F/TOP FRT S/RL	
01–02	YY67 CONV ROOF (C05), (15T)	88950133	1	313.00	LINK, F/TOP FRT S/RL	

14.155 BOLT, Folding Top Side Roof Rail Control Link

98	Y67 CONV ROOF (C05)	11516470	6	3.33	BOLT, F/TOP PIV BRKT (08.913) .	7–D8,23
99–02	Y67 CONV ROOF (C05)	11516470	AR	3.33	BOLT, F/TOP PIV BRKT (08.913) .	7–D8,23
02	YY67 CONV ROOF (C05)	11516594	6	*.52	BOLT, F/TOP PIV BRKT (M8X1.25X30) (08.900)	7–D18,23

14.170 FASTENER KIT – RAIL, Folding Top Side Roof–Center

98–02	Y67 CONV ROOF (C05)	12369636	1	48.25	FASTENER KIT, F/TOP S/RL	7–D4,19
98–02	Y67 CONV ROOF (C05)	12369634	RH	894.00	RAIL, F/TOP RR SI	7–D4,19
98–02	Y67 CONV ROOF (C05)	12369635	LH	894.00	RAIL, F/TOP RR SI	7–D4,19

cardiagn.com

14.215 BOW, Folding Top Center

98–02	Y67 CONV ROOF (C05), (16T)	12369626	1	219.00	BOW, F/TOP #2	7–D4,3
98–02	Y67 CONV ROOF (C05)	12369628	1	219.00	BOW, F/TOP #4	7–D4,5

14.260 WEATHERSTRIP, Folding Top Side Roof Rail Rear

98–02	Y67 CONV ROOF (C05)	12369632	1	317.00	WEATHERSTRIP, F/TOP RR S/RL	7–D4,18

14.310 ARM – BRACKET – FASTENER KIT – PIN – SPRING, Folding Top Hinge

01–02	YY67 CONV ROOF (C05) (16T)	88950130	1	894.00	ARM, F/TOP OTR	
01–02	YY67 CONV ROOF (C05), (16T)	88950131	LH	894.00	ARM, F/TOP OTR	
98–02	Y67 CONV ROOF (C05)	12369643	RH	235.00	BRACKET, F/TOP PIV	7–D4,18
98–02	Y67 CONV ROOF (C05)	12369644	LH	235.00	BRACKET, F/TOP PIV	7–D4,18
98–02	Y67 CONV ROOF (C05)	12369648	1	36.25	FASTENER KIT, F/TOP C/BAL SPR	7–D4,29
98–02	Y67 CONV ROOF (C05)	12369645	1	62.50	FASTENER KIT, F/TOP PIV BRKT	7–D4,18
98–02	Y67	10293227	2	3.33	PIN, F/TOP PIV BRKT LOC	7–D8,16
98–02	Y67 CONV ROOF (C05)	12369646	RH	60.25	SPRING, F/TOP C/BAL	7–D4,29
98–02	Y67 CONV ROOF (C05)	12369647	LH	60.25	SPRING, F/TOP C/BAL	7–D4,29

14.340 BOW – FASTENER KIT, Folding Top

98–02	Y67 CONV ROOF (C05)	12369630	1	608.00	BOW, F/TOP #5 SI	7–D4,7
98–02	Y67 CONV ROOF (C05)	12369629	1	43.75	FASTENER KIT, F/TOP #4 BOW .	7–D4,5
98–02	Y67 CONV ROOF (C05)	12369631	1	38.25	FASTENER KIT, F/TOP #5 SI BOW	7–D4,7
98–02	Y67 CONV ROOF (C05)	12369633	1	35.00	FASTENER KIT, F/TOP RR W/STR .	7–D4,18

14.475 HANDLE, Folding Top Assist

98–02	Y67 CONV ROOF (C05)	10449578	LH	106.00	HANDLE, F/TOP ASST (12.810) .	7–D4,25
98–02	Y67 CONV ROOF (C05)	10449579	RH	106.00	HANDLE, F/TOP ASST (12.810) .	7–D4,25

14.483 CLIP – CONNECTOR – SWITCH, Folding Top

98	Y67	10210511	2	4.55	CLIP, F/TOP WRG HARN (04.205)	7–D8,49
01–02	YY67 SPEAKER SYSTEM 6 (UZ6)	12101864	1	18.16	CONNECTOR, SW–F/TOP (BLACK) (3–WAY F W/LEADS) (02.535) (AC–DELCO #PT256)	7–D8,42
02	YY67 SPEAKER SYSTEM 6 (UZ6)	15305294	1	1.48	CONNECTOR, SW–F/TOP (LOWER) (12–WAY FEMALE) (W/O LEADS) (02.530)	
98–02	Y67 SPEAKER SYSTEM 6 (UZ6)	12101864	1	18.16	CONNECTOR, SW–F/TOP FRT LAT ACTR (BLACK) (3–WAY F W/LEADS) (02.535) (AC–DELCO #PT256)	7–D8,42
01–02	YY67	12125621	1	15.46	CONNECTOR, SW–F/TOP FRT LAT ACTR (2–WAY F) (W/LEADS) (12.243) (AC–DELCO #PT533)	7–D18,42
98–02	Y67	22528104	1	10.68	SWITCH, F/TOP STOW COMPT LID REL (ROUND PUSHBUTTON) (12.243)	7–D8,47

14.640 CLIP – PANEL – RETAINER, Roof Headlining

97–02	Y07	15748479	4	*.62	CLIP, RF RR INR T/PNL RET (13.0MM WIDE) (YELLOW) (U–BASE) (16.575)	6–E8,46
97–02	Y07	10406506	1	59.75	PANEL, HDLNG RR TR (BLACK) .	6–E8,47

cardiagn.com

14.640 CLIP – PANEL – RETAINER, Roof Headlining (Con't)

97–02	Y07 REMOVABLE SUNROOF (CF7), DUAL REMOVEABLE ROOF (C2L)	10246988	1	83.25	PANEL, HDLNG TR	6–E8,8
99–02	Y37	10253386	1	83.25	PANEL, HDLNG TR	7–D24,3
97–02	Y07	10267772	LH	3.45	RETAINER, HDLNG RR T/PNL	
97–02	Y07	20538173	4	3.45	RETAINER, HDLNG RR T/PNL (BLACK) (4.6 HOLE) (14.685)	6–E8,48
99	Y37 (1ST DES)	10292132	1	3.45	RETAINER, HDLNG T/PNL (CHRISTMAS TREE STYLE FASTENER)	7–D24,2
99	Y37 (2ND DES)	14093088	1	*.61	RETAINER, HDLNG T/PNL (08.153) (PUSH IN STYLE FASTENER)	7–D24,2
00–02	Y37	14093088	1	*.61	RETAINER, HDLNG T/PNL (08.153)	7–D24,2

14.645 SPACER, Rear Quarter Upper (Above Belt)

98–02	Y67	10408633	2	9.09	SPACER, QTR UPR T/PNL	7–D8,21

14.665 NUT – PANEL, Side Door Opening Trim

97–98	Y	10277883	6	3.33	NUT, FRT S/D OPG FIN PNL (RING TO QTR PNL JOINT) (POSN #1) (12.942)	7–E2,47
99–02	Y	1629843	6	3.33	NUT, FRT S/D OPG FIN PNL (RING TO QTR PNL JOINT) (PAINT TO MATCH) (08.919)	7–E7.47
97–00	Y	10418921	LH	161.00	PANEL, FRT S/D OPG FIN (UPR) (12.942)	7–E2,52
97–00	Y	10418922	RH	164.00	PANEL, FRT S/D OPG FIN (UPR) (12.942)	7–E2,52
97–00	Y	10444701	LH	157.00	PANEL, FRT S/D OPG FIN (LWR)	7–E2,48
97–00	Y	10444702	RH	158.00	PANEL, FRT S/D OPG FIN (LWR)	7–E2,48
01–02	Y07–67	10418921	LH	161.00	PANEL, FRT S/D OPG FIN (UPR) (12.942)	7–E2,52
01–02	Y07–67	10418922	RH	164.00	PANEL, FRT S/D OPG FIN (UPR) (12.942)	7–E2,52
01–02	Y07–67	10444701	LH	157.00	PANEL, FRT S/D OPG FIN (LWR)	7–E2,48
01–02	Y07–67	10444702	RH	158.00	PANEL, FRT S/D OPG FIN (LWR)	7–E2,48
01–02	Y37	10420532	LH	161.00	PANEL, FRT S/D OPG FIN (UPR)	6–E20,31
01–02	Y37	10420534	RH	161.00	PANEL, FRT S/D OPG FIN (UPR)	6–E20,36
01–02	Y37	10444707	RH	161.00	PANEL, FRT S/D OPG FIN (LWR)	6–E20,36
01–02	Y37	10444708	LH	161.00	PANEL, FRT S/D OPG FIN (LWR)	6–E20,31

14.683 BOLT – CLIP – GROMMET – NUT – RETAINER, Front Door Trim

97–02	Y	10293378	4	*1.65	BOLT, FRT S/D T/PNL (12.810)	7–E2,31
97	Y	11509231	3	3.33	BOLT, FRT S/D T/PNL (4.2X1.41X13, 11.35OD) (08 977)	
97–02	Y	884154	6	3.45	CLIP, FRT S/D TR RET	7–E2,8
97–02	Y	10291930	12	3.45	GROMMET, FRT S/D TR RET	7–E2,14
97	Y	10295386	4	3.45	NUT, FRT S/D TR PNL (M5 X .80) (SPECIAL AK SERIES)	
97–02	Y	10403545	4	3.33	NUT, FRT S/D TR PNL	7–E2,13
97–02	Y	10291929	12	*.61	RETAINER, FRT S/D TR (MALE)	7–E2,18
98	Y	10265935	14	*.53	RETAINER, FRT S/D TR (WHITE) (4MM HOLE, 25.5MM LG) (MALE PUSH–IN) (14.630)	

cardiagn.com

14.685 TRIM, Front Door Trim

97–99	Y SPEAKER SYSTEM 6 (UZ6), (19I)	10420164	LH	552.00	TRIM, FRT S/D (BLACK) (INCLUDES FRT S/D INNER SEALING STRIP)	7–E2,41
97	Y SPEAKER SYSTEM 6 (UZ6), (94I)	10420170	LH	552.00	TRIM, FRT S/D (RED) (INCLUDES FRT S/D INNER SEALING STRIP)	7–E2,41
97	Y SPEAKER SYSTEM 6 (UZ6), (94I)	10420171	RH	552.00	TRIM, FRT S/D (RED) (INCLUDES FRT S/D INNER SEALING STRIP)	7–E2,41
97–99	Y SPEAKER SYSTEM 6 (UZ6), (19I)	10441489	RH	552.00	TRIM, FRT S/D (BLACK) (INCLS INNER SEALING STRIP)	7–E2,41
97	Y SPEAKER SYSTEM 6 (UZ6), (92I)	10441491	RH	552.00	TRIM, FRT S/D (PEWTER) (INCLS INNER SEALING STRIP)	7–E2,41
97	Y SPEAKER SYSTEM 6 (UZ6), (92I)	10441492	LH	552.00	TRIM, FRT S/D (PEWTER) (INCLS INNER SEALING STRIP)	7–E2,41
98–99	Y07–67 SPEAKER SYSTEM 6 (UZ6), (94I)	10420170	LH	552.00	TRIM, FRT S/D (RED) (INCLUDES FRT S/D INNER SEALING STRIP)	7–E2,41
98–99	Y07–67 SPEAKER SYSTEM 6 (UZ6), (94I)	10420171	RH	552.00	TRIM, FRT S/D (RED) (INCLUDES FRT S/D INNER SEALING STRIP)	7–E2,41
98–00	Y07–67 SPEAKER SYSTEM 6 (UZ6), (92I)	10441491	RH	552.00	TRIM, FRT S/D (PEWTER) (INCLS INNER SEALING STRIP)	7–E2,41
98–00	Y07–67 SPEAKER SYSTEM 6 (UZ6), (92I)	10441492	LH	552.00	TRIM, FRT S/D (PEWTER) (INCLS INNER SEALING STRIP)	7–E2,41
98–99	Y07–67 SPEAKER SYSTEM 6 (UZ6), (67I)	10441493	RH	552.00	TRIM, FRT S/D (OAK) (INCLS INNER SEALING STRIP)	7–E7,41
98–00	Y07–67 SPEAKER SYSTEM 6 (UZ6), (67I)	10441494	LH	552.00	TRIM, FRT S/D (OAK) (INCLS INNER SEALING STRIP)	7–E7,41
99	Y37 4 SPKR SYS (UQ5), (19I)	10441497	RH	552.00	TRIM, FRT S/D (BLACK)	7–E22,41
99	Y37 4 SPKR SYS (UQ5), (19I)	10441498	LH	552.00	TRIM, FRT S/D (BLACK)	7–E22,41
00–02	Y SPEAKER SYSTEM 6 (UZ6), (19I)	10441489	RH	552.00	TRIM, FRT S/D (BLACK) (INCLS INNER SEALING STRIP)	7–E2,41
00–02	Y SPEAKER SYSTEM 6 (UZ6), (19I)	10441490	LH	552.00	TRIM, FRT S/D (BLACK) (INCLS INNER SEALING STRIP)	7–E7,41
00	Y07–67 SPEAKER SYSTEM 6 (UZ6), (67I)	10441493	RH	552.00	TRIM, FRT S/D (OAK) (INCLS INNER SEALING STRIP)	7–E7,41
00	Y07–67 SPEAKER SYSTEM 6 (UZ6), (70I)	10441495	RH	552.00	TRIM, FRT S/D (RED) (INCLS INNER SEALING STRIP)	7–E7,41
00	Y07–67 SPEAKER SYSTEM 6 (UZ6), (70I)	10441496	LH	552.00	TRIM, FRT S/D (RED) (INCLS INNER SEALING STRIP)	7–E7,41
00	Y37 4 SPKR SYS (UQ5), (19I)	10441497	RH	552.00	TRIM, FRT S/D (BLACK)	7–E22,41
00	Y37 4 SPKR SYS (UQ5), (19I)	10441498	LH	552.00	TRIM, FRT S/D (BLACK)	7–E22,41
01–02	Y (70I)	10441495	RH	552.00	TRIM, FRT S/D (RED) (INCLS INNER SEALING STRIP)	7–E7,41
01–02	Y (70I)	10441496	LH	552.00	TRIM, FRT S/D (RED) (INCLS INNER SEALING STRIP)	7–E7,41
01–02	Y07–67 (92I)	10441491	RH	552.00	TRIM, FRT S/D (PEWTER) (INCLS INNER SEALING STRIP)	7–E2,41
01–02	Y07–67 (92I)	10441492	LH	552.00	TRIM, FRT S/D (PEWTER) (INCLS INNER SEALING STRIP)	7–E2,41
01–02	Y07–67 (67I)	10441493	RH	552.00	TRIM, FRT S/D (OAK) (INCLS INNER SEALING STRIP)	7–E7,41
01–02	Y07–67 (67I)	10441494	LH	552.00	TRIM, FRT S/D (OAK) (INCLS INNER SEALING STRIP)	7–E7,41

14.688 RETAINER, Front Door Armrest

97–02	Y	10038190	2	3.48	RETAINER, FRT S/D WRNG REFL (GREEN) (10.240) (AC–DELCO #10038190)	7–E2,34

cardiagn.com

14.691 BOLT – BRACKET – HANDLE – PLUG – REFLECTOR, Front Door Trim

97–99	Y	10282678	2	3.33	BOLT, FRT S/D PULL HDL (M6X1X12M5 TORX (T–25))	
97–02	Y	10267883	LH	6.50	BRACKET, FRT S/D PULL HDL	7–E2,39
97–02	Y	10281622	RH	7.30	BRACKET, FRT S/D PULL HDL	7–E2,39
97–02	Y	22640132	RH	13.15	HANDLE, FRT S/D PULL	7–E2,32
97–02	Y	22640133	LH	13.15	HANDLE, FRT S/D PULL	7–E2,32
97–02	Y	10279471	2	*2.70	PLUG, FRT S/D PULL HDL FIN	7–E2,33
97–02	Y	10295148	2	11.85	REFLECTOR, FRT S/D WRNG	7–E2,35

14.731 BOLT – CLIP – PANEL – WASHER, Lock Pillar Trim

98–02	Y67	10296863	2	3.33	BOLT, BODY L/PLR UPR T/PNL (14MM SHLDR SCR)	7–D8,19
97–02	Y	16662182	4	*2.58	CLIP, BODY L/PLR T/PNL (0.63 SPRING STEEL) (10.056)	
97–00	Y (19I)	10256547	LH	49.75	PANEL, BODY L/PLR TR (BLACK)	7–E2,43
97–99	Y (94I)	10272395	LH	49.75	PANEL, BODY L/PLR TR (RED)	7–E2,43
97–00	Y (19I)	10426020	RH	49.75	PANEL, BODY L/PLR TR (BLACK)	7–E2,43
97–99	Y (94I)	10426024	RH	48.23	PANEL, BODY L/PLR TR (RED)	7–E2,43
97	Y07 (92I)	10272394	RH	49.75	PANEL, BODY L/PLR TR (PEWTER)	7–E2,43
97	Y07 (92I)	10426021	LH	49.75	PANEL, BODY L/PLR TR (PEWTER)	7–E2,43
98–02	Y07–67 (92I)	10272394	RH	49.75	PANEL, BODY L/PLR TR (PEWTER)	7–E2,43
98–02	Y07–67 (67I)	10285246	LH	49.75	PANEL, BODY L/PLR TR (CAMEL)	7–E7,43
98–02	Y07–67 (92I)	10426021	LH	49.75	PANEL, BODY L/PLR TR (PEWTER)	7–E2,43
98–02	Y07–67 (67I)	10426026	RH	49.75	PANEL, BODY L/PLR TR (CAMEL)	7–E7,43
00	Y (70I)	10426027	LH	49.75	PANEL, BODY L/PLR TR (RED)	7–E7,43
00	Y (70I)	10426028	RH	49.75	PANEL, BODY L/PLR TR (RED)	7–E7,43
01–02	YY07–67 (19I)	10268547	LH	49.75	PANEL, BODY L/PLR TR (BLACK)	7–E2,43
01–02	YY07–67 (19I)	10426020	RH	49.75	PANEL, BODY L/PLR TR (BLACK)	7–E2,43
01–02	YY07–67 (70I)	10426027	LH	49.75	PANEL, BODY L/PLR TR (RED)	7–E7,43
01–02	YY07–67 (70I)	10426028	RH	49.75	PANEL, BODY L/PLR TR (RED)	7–E7,43
01–02	YY37 (19I), (70I)	10268547	LH	49.75	PANEL, BODY L/PLR TR (BLACK)	7–E2,43
01–02	YY37 (19I), (70I)	10426020	RH	49.75	PANEL, BODY L/PLR TR (BLACK)	7–E2,43
98	Y67	10418408	LH	96.00	PANEL, BODY L/PLR UPR TR (BLACK)	7–D8,20
98	Y67	10418409	RH	96.00	PANEL, BODY L/PLR UPR TR (BLACK)	7–D8,20
99–02	Y67	10418408	LH	96.00	PANEL, BODY L/PLR UPR TR (BLACK)	7–D8,20
99–02	Y67	10418409	RH	96.00	PANEL, BODY L/PLR UPR TR (BLACK)	7–D8,20
98–99	Y67	459948	2	3.33	WASHER, BODY L/PLR T/PNL (12.2X26X3.38 8) (00.002)	7–D8,22

14.800 COVER, Front Seat Back and Back of Back

97–00	Y MAN RECL FRT BKT ST, DELUXE (AR9), (193)	12455509	1	124.00	COVER, D/SEAT BK CUSH (BLACK)	7–F7,13
97–98	Y MAN RECL FRT BKT ST, DELUXE (AR9), (943)	12455510	1	124.00	COVER, D/SEAT BK CUSH (RED)	7–F7,13
97–98	Y MAN RECL FRT BKT ST, DELUXE (AR9), (923)	12455511	1	124.00	COVER, D/SEAT BK CUSH (PEWTER)	7–F7,13
97	Y07 RECL FRT BKT ST, LUXURY (AQ9), (193), CONVENIENCE PKG (AAB)	12455521	1	124.00	COVER, D/SEAT BK CUSH (BLACK)	7–F2,15
97	Y07 RECL FRT BKT ST, LUXURY (AQ9), (943)	12455522	1	124.00	COVER, D/SEAT BK CUSH (RED)	7–F2,15
97	Y07 RECL FRT BKT ST, LUXURY (AQ9), (923)	12455523	1	124.00	COVER, D/SEAT BK CUSH (PEWTER)	7–F2,15

cardiagn.com

14.800 COVER, Front Seat Back and Back of Back (Con't)

98	Y MAN RECL FRT BKT ST, DELUXE (AR9), (673)	12455512	1	124.00	COVER, D/SEAT BK CUSH (OAK)	7–F7,13
98–02	Y07–67 RECL FRT BKT ST, LUXURY (AQ9), (193)	12455521	1	124.00	COVER, D/SEAT BK CUSH (BLACK)	7–F2,15
98–99	Y07–67 RECL FRT BKT ST, LUXURY (AQ9), (943)	12455522	1	124.00	COVER, D/SEAT BK CUSH (RED)	7–F2,15
98–02	Y07–67 RECL FRT BKT ST, LUXURY (AQ9), (923)	12455523	1	124.00	COVER, D/SEAT BK CUSH (PEWTER)	7–F2,15
98–02	Y07–67 RECL FRT BKT ST, LUXURY (AQ9), (673)	12455524	1	124.00	COVER, D/SEAT BK CUSH (OAK)	7–F14,15
98	Y67 RECL FRT BKT ST, LUXURY (AQ9), INDY PACE CAR (Z4Z), (194)	10413521	1	216.00	COVER, D/SEAT BK CUSH (YELLOW FRONT W/BLACK BACK)	7–F14,15
99	Y07–67 MAN RECL FRT BKT ST, DELUXE (AR9), (943) ...	12455510	1	124.00	COVER, D/SEAT BK CUSH (RED)	7–F7,13
99–02	Y07–67 MAN RECL FRT BKT ST, DELUXE (AR9), (923) ...	12455511	1	124.00	COVER, D/SEAT BK CUSH (PEWTER)	7–F7,13
99–02	Y07–67 MAN RECL FRT BKT ST, DELUXE (AR9), (673) ...	12455512	1	124.00	COVER, D/SEAT BK CUSH (OAK)	7–F7,13
00–02	Y MAN RECL FRT BKT ST, DELUXE (AR9), (703)	12455513	1	124.00	COVER, D/SEAT BK CUSH (RED)	7–F7,13
00	Y RECL FRT BKT ST, LUXURY (AQ9), (703)	12455525	1	124.00	COVER, D/SEAT BK CUSH (RED)	7–F21,15
01–02	Y07–67 MAN RECL FRT BKT ST, DELUXE (AR9), (193) ...	12455509	1	124.00	COVER, D/SEAT BK CUSH (BLACK)	7–F7,13
01–02	Y07–67 RECL FRT BKT ST, LUXURY (AQ9), (703)	12455525	1	124.00	COVER, D/SEAT BK CUSH (RED)	7–F21,15
01–02	Y37 MAN RECL FRT BKT ST, DELUXE (AR9), (194)	12455500	1	124.00	COVER, D/SEAT BK CUSH (BLACK)	7–F7,13
01–02	Y37 MAN RECL FRT BKT ST, DELUXE (AR9), (704)	12455503	1	124.00	COVER, D/SEAT BK CUSH (RED)	7–F7,13
97–98	Y RECL FRT BKT ST, LUXURY (AQ9), (943)	12455442	1	216.00	COVER, D/SEAT BK CUSH INS (RED)	7–F2,18
97–98	Y RECL FRT BKT ST, LUXURY (AQ9), (923)	12455443	1	216.00	COVER, D/SEAT BK CUSH INS (PEWTER)	7–F2,18
97	Y07 RECL FRT BKT ST, LUXURY (AQ9), (193)	12455441	1	216.00	COVER, D/SEAT BK CUSH INS (BLACK)	7–F2,18
98–02	Y07–67 RECL FRT BKT ST, LUXURY (AQ9), (193)	12455441	1	216.00	COVER, D/SEAT BK CUSH INS (BLACK)	7–F2,18
98–99	Y07–67 RECL FRT BKT ST, LUXURY (AQ9), (673)	12455444	1	216.00	COVER, D/SEAT BK CUSH INS (OAK)	7–F14,18
98	Y67 RECL FRT BKT ST, LUXURY (AQ9), INDY PACE CAR (Z4Z), (194)	10413522	1	449.00	COVER, D/SEAT BK CUSH INS (YELLOW)	7–F14,18
99	Y07–67 RECL FRT BKT ST, LUXURY (AQ9), (943)	12455442	1	216.00	COVER, D/SEAT BK CUSH INS (RED)	7–F2,18
99	Y07–67 RECL FRT BKT ST, LUXURY (AQ9), (923)	12455443	1	216.00	COVER, D/SEAT BK CUSH INS (PEWTER)	7–F2,18
00–02	YY07–67 CONVENIENCE PKG (AAB), RECL FRT BKT ST, LUXURY (AQ9), T&T WHL (N37), (923)	12455443	1	216.00	COVER, D/SEAT BK CUSH INS (PEWTER)	7–F2,18
00–02	YY07–67 CONVENIENCE PKG (AAB), RECL FRT BKT ST, LUXURY (AQ9), T&T WHL (N37), (673)	12455444	1	216.00	COVER, D/SEAT BK CUSH INS (OAK)	7–F14,18
00–02	Y07–67 RECL FRT BKT ST, LUXURY (AQ9), (703)	12455445	1	216.00	COVER, D/SEAT BK CUSH INS (RED)	7–F21,18
97–02	Y MAN RECL FRT BKT ST, DELUXE (AR9), (193)	12455515	1	124.00	COVER, P/SEAT BK CUSH (BLACK)	7–F7,13

cardiagn.com

14.800 COVER, Front Seat Back and Back of Back (Con't)

97–98	Y MAN RECL FRT BKT ST, DELUXE (AR9), (943)	12455516	1	124.00	COVER, P/SEAT BK CUSH (RED)	7–F7,13
97–98	Y MAN RECL FRT BKT ST, DELUXE (AR9), (923)	12455517	1	124.00	COVER, P/SEAT BK CUSH (PEWTER)	7–F7,13
97–02	Y07 6–WAY PWR P/SEAT ADJR (AG2), RECL FRT BKT ST, LUXURY (AQ9), (193) ...	12455527	1	124.00	COVER, P/SEAT BK CUSH (BLACK)	7–F2,15
97–99	Y07 6–WAY PWR P/SEAT ADJR (AG2), RECL FRT BKT ST, LUXURY (AQ9), (943) ...	12455528	1	124.00	COVER, P/SEAT BK CUSH (RED)	7–F2,15
97–02	Y07 6–WAY PWR P/SEAT ADJR (AG2), RECL FRT BKT ST, LUXURY (AQ9), (923) ...	12455529	1	124.00	COVER, P/SEAT BK CUSH (PEWTER)	7–F2,15
97–02	Y07 6–WAY PWR P/SEAT ADJR (AG2), RECL FRT BKT ST, LUXURY (AQ9), (673) ...	12455530	1	124.00	COVER, P/SEAT BK CUSH (OAK)	7–F2,15
98	Y MAN RECL FRT BKT ST, DELUXE (AR9), (673)	12455518	1	124.00	COVER, P/SEAT BK CUSH (OAK)	7–F7,13
98	Y67 RECL FRT BKT ST, LUXURY (AQ9), INDY PACE CAR (Z4Z), (194)	10413524	1	216.00	COVER, P/SEAT BK CUSH (YELLOW FRONT W/BLACK BACK)	7–F14,15
98–02	Y67 6–WAY PWR P/SEAT ADJR (AG2), RECL FRT BKT ST, LUXURY (AQ9), (193) ...	12455527	1	124.00	COVER, P/SEAT BK CUSH (BLACK)	7–F2,15
98–99	Y67 6–WAY PWR P/SEAT ADJR (AG2), RECL FRT BKT ST, LUXURY (AQ9), (943) ...	12455528	1	124.00	COVER, P/SEAT BK CUSH (RED)	7–F2,15
98–02	Y67 6–WAY PWR P/SEAT ADJR (AG2), RECL FRT BKT ST, LUXURY (AQ9), (923) ...	12455529	1	124.00	COVER, P/SEAT BK CUSH (PEWTER)	7–F2,15
98–02	Y67 6–WAY PWR P/SEAT ADJR (AG2), RECL FRT BKT ST, LUXURY (AQ9), (673) ...	12455530	1	124.00	COVER, P/SEAT BK CUSH (OAK)	7–F2,15
99	Y07–67 MAN RECL FRT BKT ST, DELUXE (AR9), (943) ...	12455516	1	124.00	COVER, P/SEAT BK CUSH (RED)	7–F7,13
99–02	Y07–67 MAN RECL FRT BKT ST, DELUXE (AR9), (923) ...	12455517	1	124.00	COVER, P/SEAT BK CUSH (PEWTER)	7–F7,13
99–02	Y07–67 MAN RECL FRT BKT ST, DELUXE (AR9), (673) ...	12455518	1	124.00	COVER, P/SEAT BK CUSH (OAK)	7–F7,13
00–02	Y07–67 MAN RECL FRT BKT ST, DELUXE (AR9), (703) ...	12455519	1	124.00	COVER, P/SEAT BK CUSH (RED)	7–F7,13
00–02	Y07–67 6–WAY PWR P/SEAT ADJR (AG2), RECL FRT BKT ST, LUXURY (AQ9), (703) ...	12455531	1	124.00	COVER, P/SEAT BK CUSH (RED)	7–F21,15
01–02	Y37 MAN RECL FRT BKT ST, DELUXE (AR9), (194)	12455501	1	124.00	COVER, P/SEAT BK CUSH (BLACK)	7–F7,13
01–02	Y37 MAN RECL FRT BKT ST, DELUXE (AR9), (704)	12455504	1	124.00	COVER, P/SEAT BK CUSH (RED)	7–F7,13

14.802 PAD, Front Seat Back

97–00	Y MAN RECL FRT BKT ST, DELUXE (AR9)	10272678	1	50.50	PAD, D/SEAT BK CUSH (W/WIRE)	7–F7,14
97–98	Y RECL FRT BKT ST, LUXURY (AQ9), IL3	10273418	1	50.50	PAD, D/SEAT BK CUSH (W/WIRE)	7–F2,16
99–02	Y07–67 RECL FRT BKT ST, LUXURY (AQ9), IL3	10273418	1	50.50	PAD, D/SEAT BK CUSH (W/WIRE)	7–F2,16
01–02	Y07–67 MAN RECL FRT BKT ST, DELUXE (AR9)	12455532	1	50.50	PAD, D/SEAT BK CUSH (W/WIRE)	7–F7,14

cardiagn.com

14.802 PAD, Front Seat Back (Con't)

01–02	Y37 MAN RECL FRT BKT ST, DELUXE (AR9), (EXC CONVENIENCE PKG (AAB)	12455532	1	50.50	PAD, D/SEAT BK CUSH (W/WIRE)	7–F7,14
02	Y07–67 MAN RECL FRT BKT ST, DELUXE (AR9)	10272678	1	50.50	PAD, D/SEAT BK CUSH (W/WIRE)	7–F7,14
97–98	Y RECL FRT BKT ST, LUXURY (AQ9), IL3	10283891	1	50.50	PAD, D/SEAT BK INS CVR	7–F2,19
99–02	Y07–67 RECL FRT BKT ST, LUXURY (AQ9), IL3	10283891	1	50.50	PAD, D/SEAT BK INS CVR	7–F2,19
97–00	Y MAN RECL FRT BKT ST, DELUXE (AR9)	10272678	1	50.50	PAD, P/SEAT BK CUSH	7–F7,14
97–98	Y 6–WAY PWR P/SEAT ADJR (AG2), RECL FRT BKT ST, LUXURY (AQ9), IL3	10273418	1	50.50	PAD, P/SEAT BK CUSH	7–F2,16
99–02	Y	12455532	1	50.50	PAD, P/SEAT BK CUSH (W/WIRE)	7–F7,14
99–02	Y07–67 6–WAY PWR P/SEAT ADJR (AG2), RECL FRT BKT ST, LUXURY (AQ9), IL3	10273418	1	50.50	PAD, P/SEAT BK CUSH	7–F2,16
01–02	Y07–67 MAN RECL FRT BKT ST, DELUXE (AR9)	10272678	1	50.50	PAD, P/SEAT BK CUSH	7–F7,14
97–98	Y 6–WAY PWR P/SEAT ADJR (AG2), RECL FRT BKT ST, LUXURY (AQ9), IL3	10283891	1	50.50	PAD, P/SEAT BK INS CVR	7–F2,19
99–02	Y07–67 6–WAY PWR P/SEAT ADJR (AG2), RECL FRT BKT ST, LUXURY (AQ9), IL3	10283891	1	50.50	PAD, P/SEAT BK INS CVR	7–F2,19

14.804 COVER – RETAINER, Seat Trim

97–98	Y 6–WAY PWR P/SEAT ADJR (AG2), RECL FRT BKT ST, LUXURY (AQ9), (943)	12455442	1	216.00	COVER, P/SEAT BK CUSH INS (RED) (14.800)	7–F2,18
97–98	Y 6–WAY PWR P/SEAT ADJR (AG2), RECL FRT BKT ST, LUXURY (AQ9), (923)	12455443	1	216.00	COVER, P/SEAT BK CUSH INS (PEWTER) (14.800)	7–F2,18
97–02	Y07 6–WAY PWR P/SEAT ADJR (AG2), RECL FRT BKT ST, LUXURY (AQ9), (193) ...	12455441	1	216.00	COVER, P/SEAT BK CUSH INS (BLACK) (14.800)	7–F2,18
98	Y 6–WAY PWR P/SEAT ADJR (AG2), RECL FRT BKT ST, LUXURY (AQ9), (673)	12455444	1	216.00	COVER, P/SEAT BK CUSH INS (OAK) (14.800)	7–F14,18
98	Y67 RECL FRT BKT ST, LUXURY (AQ9), INDY PACE CAR (Z4Z), (194)	10413522	1	449.00	COVER, P/SEAT BK CUSH INS (YELLOW) (14.800)	7–F14,18
99	Y07–67 6–WAY PWR P/SEAT ADJR (AG2), RECL FRT BKT ST, LUXURY (AQ9), (943) ...	12455442	1	216.00	COVER, P/SEAT BK CUSH INS (RED) (14.800)	7–F2,18
99	Y07–67 6–WAY PWR P/SEAT ADJR (AG2), RECL FRT BKT ST, LUXURY (AQ9), (923) ...	12455443	1	216.00	COVER, P/SEAT BK CUSH INS (PEWTER) (14.800)	7–F2,18
99	Y07–67 6–WAY PWR P/SEAT ADJR (AG2), RECL FRT BKT ST, LUXURY (AQ9), (673) ...	12455444	1	216.00	COVER, P/SEAT BK CUSH INS (OAK) (14.800)	7–F14,18
00–02	Y07–67 6–WAY PWR P/SEAT ADJR (AG2), RECL FRT BKT ST, LUXURY (AQ9), (703) ...	12455445	1	216.00	COVER, P/SEAT BK CUSH INS (RED) (14.800)	7–F21,18
97–02	Y07 RECL FRT BKT ST, LUXURY (AQ9)	16674629	6	*3.45	RETAINER, D/SEAT BK CUSH SI INR FAC (FASTNER–PUSH–IN FITS HOLE 6.35, OD–25.4, LEN–18, SGL HEAD) (15.222) .	7–F2,14

cardiagn.com

14.804 COVER – RETAINER, Seat Trim (Con't)

97–01	Y07 RECL FRT BKT ST, LUXURY (AQ9)	16674629	6	*3.45	RETAINER, P/SEAT BK CUSH SI INR FAC (FASTNER–PUSH–IN FITS HOLE 6.35, OD–25.4, LEN–18, SGL HEAD) (15.222) .	7–F2,14
01–02	Y07 6–WAY PWR P/SEAT ADJR (AG2), RECL FRT BKT ST, LUXURY (AQ9), IL3	16674629	6	*3.45	RETAINER, P/SEAT BK CUSH SI INR FAC (FASTNER–PUSH–IN FITS HOLE 6.35, OD–25.4, LEN–18, SGL HEAD) (15.222) .	7–F2,14

14.865 BOLT – BRACKET – COIL – COIL KIT – CONNECTOR – HARNESS – INDICATOR – MODULE – NUT – RETAINER – SENSOR – SWITCH – SWITCH KIT – WASHER, Inflatable Restraint System

97	Y07	11514139	2	*1.08	BOLT, F/END INFL RST DISCRM SEN (M6X1X25) (08.900)	
98	Y	11514139	2	*1.08	BOLT, F/END INFL RST DISCRM SEN (POS#2) (M6X1X25) (08.900)	
98–99	Y F/SEAT INFL RST SYS (AK5)	11514139	2	*1.08	BOLT, F/END INFL RST DISCRM SEN (M6X1X25) (08.900)	
97–02	Y F/SEAT INFL RST SYS (AK5)	11514623	3	*.96	BOLT, INFL RST DIAGN ENGY RESV MDL (M6X1X20) (08.900)	
97–02	Y F/SEAT INFL RST SYS (AK5)	10406983	2	12.50	BOLT, STRG WHL INFL RST MDL	7–G2,17
97–00	Y F/SEAT INFL RST SYS (AK5)	10437332	1	104.00	BRACKET, I/P INFL RST MDL (#50)	7–G2,5
01–02	Y F/SEAT INFL RST SYS (AK5)	10437332	1	104.00	BRACKET, I/P INFL RST MDL (#50)	7–G2,5
97–98	Y	26087359	1	78.00	COIL KIT, INFL RST STRG WHL MDL	7–G2,25
99–01	Y	26069710	1	78.25	COIL, STRG WHL INFL RST MDL	7–G6,26
02	Y	26095710	1	78.25	COIL, STRG WHL INFL RST MDL	7–G10,25
97–98	Y	12167147	1	27.81	CONNECTOR, INFL RST F/END DISCM SEN (2–WAY F, W/LEADS) (16.712) (AC–DELCO #PT811)	7–G2,31
99–01	YY67	15306044	1	21.52	CONNECTOR, INFL–INFL RST (2–WAY F) (W/LEADS) (AC–DELCO #PT1204)	7–G6,1
01	YY67	12102101	1	51.51	CONNECTOR, INFL–INFL RST (2–WAY M) (W/4 LEADS..2 IN BOTH CAV A & B)	7–G6,29
02	YY67	12102101	1	51.51	CONNECTOR, INFL–INFL RST (2–WAY M) (W/4 LEADS..2 IN BOTH CAV A & B)	7–G6,28
02	YY67	15306044	1	21.52	CONNECTOR, INFL–INFL RST (2–WAY FEMALE M/P 150 (W/LEADS) .) (2–WAY F) (W/LEADS) (AC–DELCO #PT1204)	7–G6,1
97–98	Y	12085486	1	53.04	CONNECTOR, INLINE–TO INFL RST HARN (BLACK) (10–WAY F) (W/LEADS) (02.535) (AC–DELCO #PT108)	7–G2,18
01–02	YY67	12102101	1	51.51	CONNECTOR, INLINE–TO INFL RST HARN (2–WAY M) (W/4 LEADS..2 IN BOTH CAV A & B)	7–G6,29

cardiagn.com

14.865 BOLT – BRACKET – COIL – COIL KIT – CONNECTOR – HARNESS – INDICATOR – MODULE – NUT – RETAINER – SENSOR – SWITCH – SWITCH KIT – WASHER, Inflatable Restraint System (Con't)

01–02	YY67	12126498	1	44.37	CONNECTOR, INLINE–TO INFL RST HARN (2–WAY FEMALE M/P 280. CONSISTS OF 12077921 W/LEADS.) (2–WAY F) (W/LEADS) (AC–DELCO #PT767)	7–G2,21
97–00	Y	12126040	1	60.44	CONNECTOR, INLINE–TO INFL RST I/P MDL (2–WAY M) (W/LEADS)	7–G2,21
97–00	Y	12126498	1	44.37	CONNECTOR, INLINE–TO INFL RST I/P MDL (2–WAY F) (W/LEADS) (AC–DELCO #PT767)	7–G2,21
97–98	Y	12126039	1	50.49	CONNECTOR, INLINE–TO INFL RST STRG WHL MDL COIL (2–WAY M) (W/2 LEADS, IF 4 LEADS REQ USE 12126494) (AC–DELCO #PT1217)	7–G2,29
99–02	Y	12102101	1	51.51	CONNECTOR, INLINE–TO INFL RST STRG WHL MDL COIL (2–WAY M) (W/4 LEADS..2 IN BOTH CAV A & B)	7–G6,29
97–98	Y	15305963	1	61.20	CONNECTOR, MDL–INFL RST DIAGN ENGY RESV (AC–DELCO #PT1099)	7–G2,22
97–98	Y	12126040	1	60.44	CONNECTOR, MDL–INFL RST I/P (2–WAY M) (W/LEADS)	7–G2,21
99–01	Y	15306044	1	21.52	CONNECTOR, MDL–INFL RST I/P (2–WAY F) (W/LEADS) (AC–DELCO #PT1204)	7–G6,1
99–02	Y	15306322	1	78.54	CONNECTOR, MDL–INFL RST SEN & DIAGN (AC–DELCO #PT1376)	7–G6,7
00	Y07 4–SPD A/TRANS (M30), A/C FRT AUTO/AUX CONT (CJ2), ACTIVE BRAKE CTL (JL4), (EXC TAIL & S/LP (T89) (EXPORT)	15306014	1	30.36	CONNECTOR, SW–INFL RST I/P MDL (6–WAY FEMALE M/P 150) (W/LEADS) (16.712) (AC–DELCO #PT1141)	7–G10,30
01–02	YY	12085535	1	18.01	CONNECTOR, SW–INFL RST I/P MDL (2–WAY F W/LEADS W/INDEX TAB OTR EDGE OF CAVITY B) (02.535) (AC–DELCO #PT146)	7–G10,30
01–02	YY67	15306014	1	30.36	CONNECTOR, SW–INFL RST I/P MDL (6–WAY FEMALE M/P 150 (W/LEADS) .) (6–WAY FEMALE M/P 150) (W/LEADS) (16.712) (AC–DELCO #PT1141)	7–G10,30
02	YY67 4–SPD A/TRANS (M30), A/C FRT AUTO/AUX CONT (CJ2), T&T WHL (N37), (EXC TAIL & S/LP (T89) (EXPORT)	12085535	1	18.01	CONNECTOR, SW–INFL RST I/P MDL (2–WAY F W/LEADS W/INDEX TAB OTR EDGE OF CAVITY B) (02.535) (AC–DELCO #PT146)	7–G10,30
97	Y	12181625	1	422.00	HARNESS, INFL RST WRG	7–G2,20
98	Y	12182298	1	127.50	HARNESS, INFL RST WRG	7–G2,20
97	Y RECL FRT BKT ST, LUXURY (AQ9), IL3, (EXC CONVENIENCE PKG (AAB)	10296617	1	54.10	HARNESS, INFLR AIR WRG	7–F2,37

cardiagn.com

14.865 BOLT – BRACKET – COIL – COIL KIT – CONNECTOR – HARNESS – INDICATOR – MODULE – NUT – RETAINER – SENSOR – SWITCH – SWITCH KIT – WASHER, Inflatable Restraint System (Con't)

97–98	Y RECL FRT BKT ST, LUXURY (AQ9), IL3, (EXC CONVENIENCE PKG (AAB)	10401715	1	53.07	HARNESS, INFLR AIR WRG	7–F2,37
97	Y CONVENIENCE PKG (AAB), RECL FRT BKT ST, LUXURY (AQ9), IL3	10410689	1	53.07	HARNESS, INFLR AIR WRG	7–F2,37
97	Y 6–WAY PWR P/SEAT ADJR (AG2), RECL FRT BKT ST, LUXURY (AQ9), IL3	10410690	1	53.07	HARNESS, INFLR AIR WRG	7–F2,37
98	Y CONVENIENCE PKG (AAB), RECL FRT BKT ST LUXURY (AQ9), IL3, (1ST DES)	10410689	1	53.07	HARNESS, INFLR AIR WRG (W/2 BLADDER BOLSTER SYSTEM SEAT, FOR 2ND DES SEE 12455476)	7–F2,37
98	Y 6–WAY PWR P/SEAT ADJR (AG2), RECL FRT BKT ST, LUXURY (AQ9), IL3, (1ST DES)	10410690	1	53.07	HARNESS, INFLR AIR WRG (USED W/2 BLADDER BOLSTER SYSTEM SEAT) (FOR 2ND DES SEE 12455477)	7–F2,37
98	Y CONVENIENCE PKG (AAB), RECL FRT BKT ST, LUXURY (AQ9), IL3, (2ND DES)	12455476	1	54.10	HARNESS, INFLR AIR WRG (D/SEAT) (W/1 BLADDER BOLSTER SYSTEM SEAT, FOR 1ST DES SEE 10410689)	7–F21,37
98	Y 6–WAY PWR P/SEAT ADJR (AG2), RECL FRT BKT ST, LUXURY (AQ9), IL3, (2ND DES)	12455477	1	54.10	HARNESS, INFLR AIR WRG (P/SEAT) (USED W/1 BLADDER BOLSTER SYSTEM SEAT) (FOR 1ST DES SEE 10410690)	7–F21,37
99–02	Y CONVENIENCE PKG (AAB), RECL FRT BKT ST, LUXURY (AQ9), IL3	12455476	1	54.10	HARNESS, INFLR AIR WRG (D/SEAT)	7–F21,37
99–02	Y 6–WAY PWR P/SEAT ADJR (AG2), RECL FRT BKT ST, LUXURY (AQ9), IL3	12455477	1	54.10	HARNESS, INFLR AIR WRG (P/SEAT)	7–F21,37
99–00	Y07–67 RECL FRT BKT ST, LUXURY (AQ9), IL3, (EXC CONVENIENCE PKG (AAB)	10401715	1	53.07	HARNESS, INFLR AIR WRG	7–F2,37
01–02	YY37 CONVENIENCE PKG (AAB), RECL FRT BKT ST, LUXURY (AQ9), IL3	12455476	1	54.10	HARNESS, INFLR AIR WRG (D/SEAT)	7–F21,37
02	YY07–67 (C88)	88898954	1	8.25	INDICATOR, I/P INFL RST MDL DISABLE	
00	Y (C88), (EXC CHASSIS, REALTIME DAMPING (F45) .	88898954	1	8.25	INDICATOR, INFL RST I/P MDL ..	
00	YY07–67 CHASSIS, REALTIME DAMPING (F45), (C88)	88898954	1	8.25	INDICATOR, INFL RST I/P MDL ..	
00	YY07–67 (C88)	88898954	1	8.25	INDICATOR, INFL RST I/P MDL ..	
00	Y07–67 (C88), (EXC CHASSIS, REALTIME DAMPING (F45)	88898954	1	8.25	INDICATOR, INFL RST I/P MDL ..	
01	YY07–67 ACTIVE BRAKE CTL (JL4), (C88)	88898954	1	8.25	INDICATOR, INFL RST I/P MDL ..	
01	YY37	88898954	1	8.25	INDICATOR, INFL RST I/P MDL ..	
02	YY07–67 (C88)	88898954	1	8.25	INDICATOR, INFL RST I/P MDL ..	
02	YY37 (C88), (EXC CHASSIS, REALTIME DAMPING (F45) .	88898954	1	8.25	INDICATOR, INFL RST I/P MDL ..	
97	Y F/SEAT INFL RST SYS (AK5)	10407332	1	638.00	MODULE, I/P INFL RST (MID MOUNT, MORTON 10" MDL) ..	7–G2,7
98	Y F/SEAT INFL RST SYS (AK5)	10411125	1	638.00	MODULE, I/P INFL RST	7–G2,7

cardiagn.com

14.865 BOLT – BRACKET – COIL – COIL KIT – CONNECTOR – HARNESS – INDICATOR – MODULE – NUT – RETAINER – SENSOR – SWITCH – SWITCH KIT – WASHER, Inflatable Restraint System (Con't)

99–02	Y F/SEAT INFL RST SYS (AK5)	10415724	1	638.00	MODULE, I/P INFL RST	7–G6,7
97	Y F/SEAT INFL RST SYS (AK5)	9378281	1	399.00	MODULE, INFL RST SEN & DIAG	7–G2,3
98	Y F/SEAT INFL RST SYS (AK5)	9378281	1	399.00	MODULE, INFL RST SEN & DIAG	7–G2,3
99	Y F/SEAT INFL RST SYS (AK5)	9380620	1	399.00	MODULE, INFL RST SEN & DIAG	7–G6,3
00	Y F/SEAT INFL RST SYS (AK5), (C88)	9391990	1	399.00	MODULE, INFL RST SEN & DIAG	7–G10,3
00	Y07–67 F/SEAT INFL RST SYS (AK5), (EXC C88)	9391830	1	399.00	MODULE, INFL RST SEN & DIAG	7–G10,3
01–02	Y F/SEAT INFL RST SYS (AK5), (C88)	12209740	1	399.00	MODULE, INFL RST SEN & DIAG	7–G10,3
97	Y F/SEAT INFL RST SYS (AK5)	10407331	1	638.00	MODULE, STRG WHL INFL RST	7–G2,1
98	Y F/SEAT INFL RST SYS (AK5)	10411124	1	638.00	MODULE, STRG WHL INFL RST	7–G2,1
99–02	Y F/SEAT INFL RST SYS (AK5)	10415723	1	638.00	MODULE, STRG WHL INFL RST	7–G6,1
97–99	Y F/SEAT INFL RST SYS (AK5)	10281487	2	*.69	NUT, INFL RST F/END DISCRM SEN (04.665)	7–G2,16
97–02	Y	11514517	4	*3.33	NUT, INFL RST I/P MDL (HEX W/CON WA M6X1X5.5 (9) 7111M 16–OD) (08.917)	
97–98	Y	11517293	4	.42	NUT, INFL RST I/P MDL (M6X1X5.5) (08.917)	
97–98	Y	15304998	1	3.35	RETAINER, INFL RST RESV ENGY MDL WRG HARN CONN (YELLOW) (USE FOR WIRE STRAIN RELIEF FOR 12–WAY FEMALE CONN)	7–G2,23
97–98	Y	15317991	1	3.33	RETAINER, INFL RST RESV ENGY MDL WRG HARN CONN (LOCKS INFL RST ENGY MDL RETAINER TO CONN) (W/STRAP & ROUND BUTTON TO HOLD TO RETAINER) (02.530)	7–G2,24
99–00	Y	15318141	1	3.35	RETAINER, INFL RST RESV ENGY MDL WRG HARN CONN (AXIAL–TYPE RETAINER W/STRAP) (CONNECTOR POSITION ASSURANCE) (AXIAL TYPE W/TETHERED STRP..CONN POSITION ASSURANCE)	7–G6,23
99–02	Y	15318147	1	3.35	RETAINER, INFL RST RESV ENGY MDL WRG HARN CONN	7–G6,23
99–00	Y	15355022	1	3.35	RETAINER, INFL RST RESV ENGY MDL WRG HARN CONN (USED FOR WIRE STRAIN RELIEF FOR 18–WAY F CONN)	7–G6,23
97–98	Y F/SEAT INFL RST SYS (AK5)	16203545	1	44.75	SENSOR, F/END INFL RST DISCRM (16.712)	7–G2,15
97–98	Y07 (19I)	12456117	1	130.00	SWITCH KIT, INFL RST I/P MDL (AIR BAG ON–OFF) (BLACK) (INCLS ST BELT RETR) (AC–DELCO #12456117)	7–G2,2

cardiagn.com

14.865 BOLT – BRACKET – COIL – COIL KIT – CONNECTOR – HARNESS – INDICATOR – MODULE – NUT – RETAINER – SENSOR – SWITCH – SWITCH KIT – WASHER, Inflatable Restraint System (Con't)

97–98	Y07 (92I)	12456118	1	130.00	SWITCH KIT, INFL RST I/P MDL (AIR BAG ON–OFF) (PEWTER) (INCLS ST BELT RETR) (AC–DELCO #12456118)	7–G2,2
97–98	Y07 (94I)	12456119	1	130.00	SWITCH KIT, INFL RST I/P MDL (AIR BAG ON–OFF) (RED) (INCLS ST BELT RETR) (AC–DELCO #12456119)	7–G2,2
98	Y07 (67I)	88893544	1	130.00	SWITCH KIT, INFL RST I/P MDL (AIR BAG ON–OFF) (OAK) (AC–DELCO #88893544)	7–G2,2
98	Y67 (92I)	12456122	1	130.00	SWITCH KIT, INFL RST I/P MDL (AIR BAG ON–OFF) (PEWTER) (INCLS ST BELT RETR) (AC–DELCO #12456122)	7–G2,2
98	Y67 (94I)	12456123	1	130.00	SWITCH KIT, INFL RST I/P MDL (AIR BAG ON–OFF) (RED) (INCLS ST BELT RETR) (AC–DELCO #12456123)	7–G2,2
98	Y67 (67I)	12456124	1	130.00	SWITCH KIT, INFL RST I/P MDL (AIR BAG ON–OFF) (CAMEL) (INCLS ST BELT RETR) (AC–DELCO #12456124)	7–G2,2
98	Y67 (19I)	88893545	1	130.00	SWITCH KIT, INFL RST I/P MDL (AIR BAG ON–OFF) (BLACK) (AC–DELCO #88893545)	7–G2,2
99	Y07–37 (92I)	12458575	1	130.00	SWITCH KIT, INFL RST I/P MDL (AIR BAG ON–OFF) (PEWTER) (INCLS ST BELT RETR) (AC–DELCO #12458575)	7–G6,2
99	Y07–37 (94I)	12458576	1	130.00	SWITCH KIT, INFL RST I/P MDL (AIR BAG ON–OFF) (RED) (INCLS ST BELT RETR) (AC–DELCO #12458576)	7–G6,2
99	Y07–37 (19I)	88893542	1	130.00	SWITCH KIT, INFL RST I/P MDL (AIR BAG ON–OFF) (BLACK) (AC–DELCO #88893542)	7–G6,2
99	Y07–37 (67I)	88893544	1	130.00	SWITCH KIT, INFL RST I/P MDL (AIR BAG ON–OFF) (OAK) (AC–DELCO #88893544)	7–G2,2
99	Y67 (19I)	12458578	1	130.00	SWITCH KIT, INFL RST I/P MDL (AIR BAG ON–OFF) (BLK) (INCLS ST BELT RETR) (AC–DELCO #12458578)	7–G6,2
99	Y67 (92I)	12458579	1	130.00	SWITCH KIT, INFL RST I/P MDL (AIR BAG ON–OFF) (PEWTER) (INCLS ST BELT RETR) (AC–DELCO #12458579)	7–G6,2
99	Y67 (94I)	12458580	1	130.00	SWITCH KIT, INFL RST I/P MDL (AIR BAG ON–OFF) (RED) (INCLS ST BELT RETR) (AC–DELCO #12458580)	7–G6,2
99	Y67 (67I)	12458581	1	130.00	SWITCH KIT, INFL RST I/P MDL (AIR BAG ON–OFF) (CAMEL) (INCLS ST BELT RETR) (AC–DELCO #12458581)	7–G6,2

cardiagn.com

14.865 BOLT – BRACKET – COIL – COIL KIT – CONNECTOR – HARNESS – INDICATOR – MODULE – NUT – RETAINER – SENSOR – SWITCH – SWITCH KIT – WASHER, Inflatable Restraint System (Con't)

00	Y07–37 (19I), (1ST DES)	88893542	1	130.00	SWITCH KIT, INFL RST I/P MDL (AIR BAG ON–OFF) (BLACK) (USED ON VEHICLES PRIOR TO VIN #1G1YY22G7Y5119656) (AC–DELCO #88893542)	7–G6,2
00	Y07–37 (92I), (1ST DES)	88893543	1	130.00	SWITCH KIT, INFL RST I/P MDL (AIR BAG ON–OFF) (PEWTER) (USED ON VEHICLES PRIOR TO VIN #1G1YY22G7Y5119656) (AC–DELCO #88893543)	
00	Y07–37 (67I), (1ST DES)	88893544	1	130.00	SWITCH KIT, INFL RST I/P MDL (AIR BAG ON–OFF) (OAK) (USED ON VEHICLES PRIOR TO VIN #1G1YY22G7Y5119656) (AC–DELCO #88893544)	7–G2,2
00	Y07–37 (70I), (1ST DES)	88895081	1	130.00	SWITCH KIT, INFL RST I/P MDL (RED) (USED ON VEHICLES PRIOR TO VIN #1G1YY22G7Y5119656) (AC–DELCO #88895081)	
00	Y07–37 (70I), (2ND DES) ...	88895987	1	130.00	SWITCH KIT, INFL RST I/P MDL (RED) (USED ON VEHICLES W/VIN #1G1YY22G7Y5119656 AND AFTER) (AC–DELCO #88895987)	
00	Y07–37 (19I), (2ND DES) ...	88896020	1	130.00	SWITCH KIT, INFL RST I/P MDL (AIR BAG ON–OFF) (BLACK) (USED ON VEHICLES W/VIN #1G1YY22G7Y5119656 AND AFTER) (AC–DELCO #88896020)	
00	Y07–37 (92I), (2ND DES) ...	88896021	1	130.00	SWITCH KIT, INFL RST I/P MDL (AIR BAG ON–OFF) (PEWTER) (USED ON VEHICLES W/VIN #1G1YY22G7Y5119656 AND AFTER) (AC–DELCO #88896021)	
00	Y07–37 (67I), (2ND DES) ...	88896022	1	130.00	SWITCH KIT, INFL RST I/P MDL (AIR BAG ON–OFF) (OAK) (USED ON VEHICLES W/VIN #1G1YY22G7Y5119656 AND AFTER) (AC–DELCO #88096022)	
00	Y67 (19I), (1ST DES)	88893545	1	130.00	SWITCH KIT, INFL RST I/P MDL (AIR BAG ON–OFF) (BLACK) (USED ON VEHICLES PRIOR TO VIN #1G1YY22G7Y5119656) (AC–DELCO #88893545)	7–G2,2
00	Y67 (92I), (1ST DES)	88893546	1	130.00	SWITCH KIT, INFL RST I/P MDL (AIR BAG ON–OFF) (PEWTER) (USED ON VEHICLES PRIOR TO VIN #1G1YY22G7Y5119656) (AC–DELCO #88893546)	
00	Y67 (67I), (1ST DES)	88893547	1	130.00	SWITCH KIT, INFL RST I/P MDL (AIR BAG ON–OFF) (OAK) (USED ON VEHICLES PRIOR TO VIN #1G1YY22G7Y5119656) (AC–DELCO #88893547)	

cardiagn.com

14.865 BOLT – BRACKET – COIL – COIL KIT – CONNECTOR – HARNESS – INDICATOR – MODULE – NUT – RETAINER – SENSOR – SWITCH – SWITCH KIT – WASHER, Inflatable Restraint System (Con't)

00	Y67 (70I), (1ST DES)	88895083	1	130.00	SWITCH KIT, INFL RST I/P MDL (RED) (USED ON VEHICLES PRIOR TO VIN #1G1YY22G7Y5119656) (AC–DELCO #88895083)	
00	Y67 (70I), (2ND DES)	88895988	1	130.00	SWITCH KIT, INFL RST I/P MDL (RED) (USED ON VEHICLES W/VIN #1G1YY22G7Y5119656 AND AFTER) (AC–DELCO #88895988)	
00	Y67 (19I), (2ND DES)	88896023	1	130.00	SWITCH KIT, INFL RST I/P MDL (AIR BAG ON–OFF) (BLACK) (USED ON VEHICLES W/VIN #1G1YY22G7Y5119656 AND AFTER) (AC–DELCO #88896023)	
00	Y67 (92I), (2ND DES)	88896024	1	130.00	SWITCH KIT, INFL RST I/P MDL (AIR BAG ON–OFF) (PEWTER) (USED ON VEHICLES W/VIN #1G1YY22G7Y5119656 AND AFTER) (AC–DELCO #88896024)	
00	Y67 (67I), (2ND DES)	88896025	1	130.00	SWITCH KIT, INFL RST I/P MDL (AIR BAG ON–OFF) (OAK) (USED ON VEHICLES W/VIN #1G1YY22G7Y5119656 AND AFTER) (AC–DELCO #88896025)	
97–99	Y07 (19I)	12455582	1	130.00	SWITCH KIT, STRG WHL INFL RST MDL (AIR BAG ON–OFF) (BLACK) (INCLS ST BELT RETR) (AC–DELCO #12455582)	7–G2,1
97–99	Y07 (94I)	12455584	1	130.00	SWITCH KIT, STRG WHL INFL RST MDL (AIR BAG ON–OFF) (RED) (INCLS ST BELT RETR) (AC–DELCO #12455584)	7–G2,1
97–99	Y07 (92I)	88893537	1	130.00	SWITCH KIT, STRG WHL INFL RST MDL (AIR BAG ON–OFF) (PEWTER) (AC–DELCO #88893537)	7–G2,1
98–99	Y07 (67I)	12455585	1	130.00	SWITCH KIT, STRG WHL INFL RST MDL (AIR BAG ON–OFF) (OAK) (INCLS ST BELT RETR) (AC–DELCO #12455585)	7–G2,1
98–99	Y67 (19I)	12455586	1	130.00	SWITCH KIT, STRG WHL INFL RST MDL (AIR BAG ON–OFF) (BLACK) (INCLS ST BELT RETR) (AC–DELCO #12455586)	7–G2,1
98–99	Y67 (92I)	12455587	1	130.00	SWITCH KIT, STRG WHL INFL RST MDL (AIR BAG ON–OFF) (PEWTER) (INCLS ST BELT RETR) (AC–DELCO #12455587)	7–G2,1
98–99	Y67 (94I)	12455588	1	130.00	SWITCH KIT, STRG WHL INFL RST MDL (AIR BAG ON–OFF) (RED) (INCLS ST BELT RETR) (AC–DELCO #12455588)	7–G2,1

cardiagn.com

14.865 BOLT – BRACKET – COIL – COIL KIT – CONNECTOR – HARNESS – INDICATOR – MODULE – NUT – RETAINER – SENSOR – SWITCH – SWITCH KIT – WASHER, Inflatable Restraint System (Con't)

98–99	Y67 (67I)	12455589	1	130.00	SWITCH KIT, STRG WHL INFL RST MDL (AIR BAG ON–OFF) (CAMEL) (INCLS ST BELT RETR) (AC–DELCO #12455589)	7–G2,1
99	Y37 (19I)	12455582	1	130.00	SWITCH KIT, STRG WHL INFL RST MDL (AIR BAG ON–OFF) (BLACK) (INCLS ST BELT RETR) (AC–DELCO #12455582)	7–G2,1
99	Y37 (94I)	12455584	1	130.00	SWITCH KIT, STRG WHL INFL RST MDL (AIR BAG ON–OFF) (RED) (INCLS ST BELT RETR) (AC–DELCO #12455584)	7–G2,1
99	Y37 (67I)	12455585	1	130.00	SWITCH KIT, STRG WHL INFL RST MDL (AIR BAG ON–OFF) (OAK) (INCLS ST BELT RETR) (AC- DELCO #12455585)	7–G2,1
99	Y37 (92I)	88893537	1	130.00	SWITCH KIT, STRG WHL INFL RST MDL (AIR BAG ON–OFF) (PEWTER) (AC–DELCO #88893537)	7–G2,1
00	Y07–37 (70I), (2ND DES) ...	88895985	1	130.00	SWITCH KIT, STRG WHL INFL RST MDL (RED) (USED ON VEHICLES W/VIN #1G1YY22G7Y5119656 AND AFTER) (AC–DELCO #88895985)	
00	Y07–37 (19I), (2ND DES) ...	88895994	1	130.00	SWITCH KIT, STRG WHL INFL RST MDL (BLACK) (USED ON VEHICLES W/VIN #1G1YY22G7Y5119656 AND AFTER) (AC–DELCO #88895994)	
00	Y07–37 (92I), (2ND DES) ...	88895995	1	130.00	SWITCH KIT, STRG WHL INFL RST MDL (PEWTER) (USED ON VEHICLES W/VIN #1G1YY22G7Y5119656 AND AFTER) (AC–DELCO #88895995)	
00	Y07–37 (67I), (2ND DES) ...	88895996	1	130.00	SWITCH KIT, STRG WHL INFL RST MDL (OAK) (USED ON VEHICLES W/VIN #1G1YY22G7Y5119656 AND AFTER) (AC–DELCO #88895996)	
00	Y67 (70I), (2ND DES)	88895986	1	130.00	SWITCH KIT, STRG WHL INFL RST MDL (RED) (USED ON VEHICLES W/VIN #1G1YY22G7Y5119656 AND AFTER) (AC–DELCO #88895986)	
00	Y67 (19I), (2ND DES)	88896016	1	130.00	SWITCH KIT, STRG WHL INFL RST MDL (BLACK) (USED ON VEHICLES W/VIN #1G1YY22G7Y5119656 AND AFTER) (AC–DELCO #88896016)	
00	Y67 (92I), (2ND DES)	88896017	1	130.00	SWITCH KIT, STRG WHL INFL RST MDL (PEWTER) (USED ON VEHICLES W/VIN #1G1YY22G7Y5119656 AND AFTER) (AC–DELCO #88896017)	

cardiagn.com

14.865 BOLT – BRACKET – COIL – COIL KIT – CONNECTOR – HARNESS – INDICATOR – MODULE – NUT – RETAINER – SENSOR – SWITCH – SWITCH KIT – WASHER, Inflatable Restraint System (Con't)

00	Y67 (67I), (2ND DES)	88896018	1	130.00	SWITCH KIT, STRG WHL INFL RST MDL (OAK) (USED ON VEHICLES W/VIN #1G1YY22G7Y5119656 AND AFTER) (AC–DELCO #88896018)	
01	Y07–37 (70I)	88895985	1	130.00	SWITCH KIT, STRG WHL INFL RST MDL (RED) (AC–DELCO #88895985)	
01	Y07–37 (19I)	88895994	1	130.00	SWITCH KIT, STRG WHL INFL RST MDL (BLACK) (AC–DELCO #88895994)	
01	Y07–37 (92I)	88895995	1	130.00	SWITCH KIT, STRG WHL INFL RST MDL (PEWTER) (AC–DELCO #88895995)	
01	Y07–37 (67I)	88895996	1	130.00	SWITCH KIT, STRG WHL INFL RST MDL (OAK) (AC–DELCO #88895996)	
01	Y67 (70I)	88895986	1	130.00	SWITCH KIT, STRG WHL INFL RST MDL (RED) (AC–DELCO #88895986)	
01	Y67 (19I)	88896016	1	130.00	SWITCH KIT, STRG WHL INFL RST MDL (BLACK) (AC–DELCO #88896016)	
01	Y67 (92I)	88896017	1	130.00	SWITCH KIT, STRG WHL INFL RST MDL (PEWTER) (AC–DELCO #88896017)	
01	Y67 (67I)	88896018	1	130.00	SWITCH KIT, STRG WHL INFL RST MDL (OAK) (AC–DELCO #88896018)	
00–02	Y (C88)	10440761	1	30.50	SWITCH, I/P INFL RST MDL	7–G10,30
97–02	Y	26011609	1	8.10	WASHER, STRG WHL INFL RST MDL COIL	4–F2,8
	*EXPORT**********EXPORT**********EXPORT**********EXPORT**********EXPORT*					
00–02	Y07–67 F/SEAT INFL RST SYS (AK5), (EXC C88)	12209730	1	399.00	MODULE, INFL RST SEN & DIAG	7–G10,3

14.870 BOLT – BRACKET KIT – PLATE, Child Safety Seat

99	Y37 CHILD RST PROVISIONS (AN4) (CANADIAN)	11509640	1	3.33	BOLT, CHILD ST TOP STRP BRKT (08.900)	
00–02	Y37	11509640	1	3.33	BOLT, CHILD ST TOP STRP BRKT (08.900)	
00–02	Y37	10289507	1	1.90	PLATE, CHILD ST TOP STRP BRKT ANC (12.184)	7–H2,17
	*EXPORT**********EXPORT**********EXPORT**********EXPORT**********EXPORT*					
99–02	Y37 CANADIAN (Z49)	10415692	1	5.25	BRACKET KIT, CHILD ST RST SYS BELT	7–H2,1
99	Y37 CHILD RST PROVISIONS (AN4) (CANADIAN)	10289507	1	1.90	PLATE, CHILD ST TOP STRP BRKT ANC (12.184)	7–H2,17

14.875 BELT – BELT KIT – BOLT – BRACKET – COVER – EXTENSION KIT – NUT – PLATE, Seat Belt

97–02	Y (19I)	12457501	1	63.00	BELT KIT, D/SEAT (BKL SI) (BLACK)	7–G14,14
97	Y (92I)	12457502	1	63.00	BELT KIT, D/SEAT (BKL SI) (PEWTER)	7–G14,14
97	Y (94I)	12457503	1	63.00	BELT KIT, D/SEAT (BKL SI) (RED)	7–G14,14

cardiagn.com

14.875 BELT – BELT KIT – BOLT – BRACKET – COVER – EXTENSION KIT – NUT – PLATE, Seat Belt (Con't)

97–98	Y07 F/SEAT INFL RST SYS (AK5), (19I), (EXC MAN RST SYS (AX4) (EXPORT)	88893509	1	72.50	BELT KIT, D/SEAT (RETR SI)	7–G14,10
97–98	Y07 F/SEAT INFL RST SYS (AK5), (92I), (EXC MAN RST SYS (AX4) (EXPORT)	88893510	1	72.50	BELT KIT, D/SEAT (RETR SI)	7–G14,10
97–99	Y07 F/SEAT INFL RST SYS (AK5), (94I), (EXC MAN RST SYS (AX4) (EXPORT)	88894736	1	72.50	BELT KIT, D/SEAT (RETR SI) (RED)	7–G14,10
98–99	Y07 F/SEAT INFL RST SYS (AK5), (67I), (EXC MAN RST SYS (AX4) (EXPORT)	88893511	1	72.50	BELT KIT, D/SEAT (RETR SI) (OAK)	7–G14,10
98–02	Y07–67 (92I)	12457502	1	63.00	BELT KIT, D/SEAT (BKL SI) (PEWTER)	7–G14,14
98–99	Y07–67 (94I)	12457503	1	63.00	BELT KIT, D/SEAT (BKL SI) (RED)	7–G14,14
98–02	Y07–67 (67I)	12457504	1	63.00	BELT KIT, D/SEAT (BKL SI) (CAMEL)	7–G14,14
98–99	Y67 F/SEAT INFL RST SYS (AK5), (19I), (EXC MAN RST SYS (AX4) (EXPORT)	88893517	1	72.50	BELT KIT, D/SEAT (RETR SI)	7–G21,7
98–00	Y67 F/SEAT INFL RST SYS (AK5), (94I), (EXC MAN RST SYS (AX4) (EXPORT)	88894737	1	72.50	BELT KIT, D/SEAT (RETR SI) (RED)	7–G21,7
99	Y07–37 F/SEAT INFL RST SYS (AK5), (19I), (EXC MAN RST SYS (AX4) (EXPORT) ..	88893509	1	72.50	BELT KIT, D/SEAT (RETR SI)	7–G14,10
99	Y07–37 F/SEAT INFL RST SYS (AK5), (92I), (EXC MAN RST SYS (AX4) (EXPORT) ..	88893510	1	72.50	BELT KIT, D/SEAT (RETR SI)	7–G14,10
99	Y37 F/SEAT INFL RST SYS (AK5), (94I), (EXC MAN RST SYS (AX4) (EXPORT)	88894736	1	72.50	BELT KIT, D/SEAT (RETR SI) (RED)	7–G14,10
00	Y07 F/SEAT INFL RST SYS (AK5), (67I), (EXC MAN RST SYS (AX4) (EXPORT), (1ST DES)	88893511	1	72.50	BELT KIT, D/SEAT (RETR SI) (OAK)	7–G14,10
00	Y07 F/SEAT INFL RST SYS (AK5), (67I), (EXC MAN RST SYS (AX4) (EXPORT), (2ND DES)	88895167	1	72.50	BELT KIT, D/SEAT (RETR SI) (OAK) (USED ON VEHICLES W/VIN #1G1YY22G7Y5119656 AND FUTURE)	7–G14,10
00	Y07–37 F/SEAT INFL RST SYS (AK5), (70I), (EXC MAN RST SYS (AX4) (EXPORT), (1ST DES)	88893508	1	72.50	BELT KIT, D/SEAT (RETR SI) (USED ON VEHICLES PRIOR TO VIN #1G1YY22G7Y5119656)	7–G14,10
00	Y07–37 F/SEAT INFL RST SYS (AK5), (19I), (EXC MAN RST SYS (AX4) (EXPORT), (1ST DES)	88893509	1	72.50	BELT KIT, D/SEAT (RETR SI) (USE ON VEHICLES PRIOR TO VIN #1G1YY22G7Y5119656)	7–G14,10
00	Y07–37 F/SEAT INFL RST SYS (AK5), (92I), (EXC MAN RST SYS (AX4) (EXPORT), (1ST DES)	88893510	1	72.50	BELT KIT, D/SEAT (RETR SI)	7–G14,10
00	Y07 [illegible] F/SEAT INFL RST SYS (AK5), (94I), (EXC MAN RST SYS (AX4) (EXPORT) ..	88894736	1	72.50	BELT KIT, D/SEAT (RETR SI, .RED)	7–G14,10
00	Y07–37 F/SEAT INFL RST [illegible]YS (AK5), (70I), (EXC MAN RS[illegible] [illegible] (EXPORT), (2ND DES)	88895164	1	72.50	BELT KIT, D/SEAT (RETR SI) (RED) (USED ON VEHICLES W/VIN #1G1[illegible]2G7Y5119656 AND FUTURE)	7–G14,10

cardiagn.com

14.875 BELT – BELT KIT – BOLT – BRACKET – COVER – EXTENSION KIT – NUT – PLATE, Seat Belt (Con't)

00	Y07–37 F/SEAT INFL RST SYS (AK5), (19I), (EXC MAN RST SYS (AX4) (EXPORT), (2ND DES)	88895165	1	72.50	BELT KIT, D/SEAT (RETR SI) (BLACK) (USED ON VEHICLES W/VIN #1G1YY22G7Y5119656 AND FUTURE)	7–G14,10
00	Y07–37 F/SEAT INFL RST SYS (AK5), (92I), (EXC MAN RST SYS (AX4) (EXPORT), (2ND DES)	88895166	1	72.50	BELT KIT, D/SEAT (RETR SI) (PEWTER) (USED ON VEHICLES W/VIN #1G1YY22G7Y5119656 AND FUTURE)	7–G14,10
00–02	Y07–67 (70I)	12457505	1	63.00	BELT KIT, D/SEAT (BKL SI) (RED)	7–G14,14
00	Y67 F/SEAT INFL RST SYS (AK5), (70I), (EXC MAN RST SYS (AX4) (EXPORT), (1ST DES)	88893516	1	72.50	BELT KIT, D/SEAT (RETR SI)	7–G21,7
00	Y67 F/SEAT INFL RST SYS (AK5), (19I), (EXC MAN RST SYS (AX4) (EXPORT), (1ST DES)	88893517	1	72.50	BELT KIT, D/SEAT (RETR SI) (USED ON VEHICLES PRIOR TO VIN #1G1YY22G7Y5119656, FOR 2ND DES SEE 88895 69)	7–G21,7
00	Y67 F/SEAT INFL RST SYS (AK5), (70I), (EXC MAN RST SYS (AX4) (EXPORT), (2ND DES)	88895168	1	72.50	BELT KIT, D/SEAT (RETR SI) (RED) (USED ON VEHICLES W/VIN #1G1YY22G7Y5119656 AND FUTURE)	7–G21,7
00	Y67 F/SEAT INFL RST SYS (AK5), (19I), (EXC MAN RST SYS (AX4) (EXPORT), (2ND DES)	88895169	1	72.50	BELT KIT, D/SEAT (RETR SI) (BLACK) (USED ON VEHICLES W/VIN #1G1YY22G7Y5119656 AND FUTURE)	7–G21,7
00	Y67 F/SEAT INFL RST SYS (AK5), (92I), (EXC MAN RST SYS (AX4) (EXPORT), (2ND DES)	88895170	1	72.50	BELT KIT, D/SEAT (RETR SI) (PEWTER) (USED ON VEHICLES W/VIN #1G1YY22G7Y5119656 AND FUTURE)	7–G21,7
00	Y67 F/SEAT INFL RST SYS (AK5), (67I), (EXC MAN RST SYS (AX4) (EXPORT), (2ND DES)	88895171	1	72.50	BELT KIT, D/SEAT (RETR SI) (OAK) (USED ON VEHICLES W/VIN #1G1YY22G7Y5119656 AND FUTURE)	7–G21,7
01–02	Y07 F/SEAT INFL RST SYS (AK5), (70I), (EXC MAN RST SYS (AX4) (EXPORT)	88895164	1	72.50	BELT KIT, D/SEAT (RETR SI) (RED)	7–G14,10
01–02	Y07 F/SEAT INFL RST SYS (AK5), (19I), (EXC MAN RST SYS (AX4) (EXPORT)	88895165	1	72.50	BELT KIT, D/SEAT (RETR SI) (BLACK)	7–G14,10
01–02	Y07 F/SEAT INFL RST SYS (AK5), (92I), (EXC MAN RST SYS (AX4) (EXPORT)	88895166	1	72.50	BELT KIT, D/SEAT (RETR SI) (PEWTER)	7–G14,10
01–02	Y07 F/SEAT INFL RST SYS (AK5), (67I), (EXC MAN RST SYS (AX4) (EXPORT)	88895167	1	72.50	BELT KIT, D/SEAT (RETR SI) (OAK)	7–G14,10
01–02	Y37 F/SEAT INFL RST SYS (AK5), (19I), (70I)	88895165	1	72.50	BELT KIT, D/SEAT (RETR SI) (BLACK)	7–G14,10
01–02	Y67 F/SEAT INFL RST SYS (AK5), (70I), (EXC MAN RST SYS (AX4) (EXPORT)	88895168	1	72.50	BELT KIT, D/SEAT (RETR SI) (RED)	7–G21,7
01–02	Y67 F/SEAT INFL RST SYS (AK5), (19I), (EXC MAN RST SYS (AX4) (EXPORT)	88895169	1	72.50	BELT KIT, D/SEAT (RETR SI) (BLACK)	7–G21,7
01–02	Y67 F/SEAT INFL RST SYS (AK5), (92I), (EXC MAN RST SYS (AX4) (EXPORT)	88895170	1	72.50	BELT KIT, D/SEAT (RETR SI) (PEWTER)	7–G21,7
01–02	Y67 F/SEAT INFL RST SYS (AK5), (67I), (EXC MAN RST SYS (AX4) (EXPORT)	88895171	1	72.50	BELT KIT, D/SEAT (RETR SI) (OAK)	7–G21,7

cardiagn.com

14.875 BELT – BELT KIT – BOLT – BRACKET – COVER – EXTENSION KIT – NUT – PLATE, Seat Belt (Con't)

97–02	Y (19I)	12458065	1	63.00	BELT KIT, P/SEAT (BKL SI) (BLACK)	7–G14,14
97	Y (92I)	12458478	1	63.00	BELT KIT, P/SEAT (BKL SI) (PEWTER)	7–G14,14
97–99	Y (94I)	12458479	1	63.00	BELT KIT, P/SEAT (BKL SI) (RED)	7–G14,14
97–98	Y07 F/SEAT INFL RST SYS (AK5), (19I), (EXC MAN RST SYS (AX4) (EXPORT)	88893513	1	72.50	BELT KIT, P/SEAT (RETR SI)	7–G14,10
97–98	Y07 F/SEAT INFL RST SYS (AK5), (92I), (EXC MAN RST SYS (AX4) (EXPORT)	88893514	1	72.50	BELT KIT, P/SEAT (RETR SI)	7–G14,10
97–99	Y07 F/SEAT INFL RST SYS (AK5), (94I), (EXC MAN RST SYS (AX4) (EXPORT)	88894738	1	72.50	BELT KIT, P/SEAT (RETR SI) (RED)	7–G14,10
98–99	Y07 F/SEAT INFL RST SYS (AK5), (67I), (EXC MAN RST SYS (AX4) (EXPORT)	88893515	1	72.50	BELT KIT, P/SEAT (RETR SI) (OAK)	7–G14,10
98–02	Y07–67 (92I)	12458478	1	63.00	BELT KIT, P/SEAT (BKL SI) (PEWTER)	7–G14,14
98–02	Y07–67 (67I)	12458480	1	63.00	BELT KIT, P/SEAT (BKL SI) (CAMEL)	7–G14,14
98–99	Y67 F/SEAT INFL RST SYS (AK5), (19I), (EXC MAN RST SYS (AX4) (EXPORT)	88893521	1	72.50	BELT KIT, P/SEAT (RETR SI) (BLACK)	7- G21,7
98–99	Y67 F/SEAT INFL RST SYS (AK5), (92I), (EXC MAN RST SYS (AX4) (EXPORT)	88893522	1	72.50	BELT KIT, P/SEAT (RETR SI) (PEWTER)	7–G21,7
98–00	Y67 F/SEAT INFL RST SYS (AK5), (94I), (EXC MAN RST SYS (AX4) (EXPORT)	88894739	1	72.50	BELT KIT, P/SEAT (RETR SI) (RED)	7–G21,7
99	Y07–37 F/SEAT INFL RST SYS (AK5), (19I), (EXC MAN RST SYS (AX4) (EXPORT)	88893513	1	72.50	BELT KIT, P/SEAT (RETR SI)	7–G14,10
99	Y07–37 F/SEAT INFL RST SYS (AK5), (92I), (EXC MAN RST SYS (AX4) (EXPORT)	88893514	1	72.50	BELT KIT, P/SEAT (RETR SI)	7–G14,10
99	Y37 F/SEAT INFL RST SYS (AK5), (94I), (EXC MAN RST SYS (AX4) (EXPORT)	88894738	1	72.50	BELT KIT, P/SEAT (RETR SI) (RED)	7–G14,10
00	Y07 F/SEAT INFL RST SYS (AK5), (70I), (EXC MAN RST SYS (AX4) (EXPORT), (1ST DES)	88893512	1	72.50	BELT KIT, P/SEAT (RETR SI) (DOMESTIC) (USED ON VEHICLES PRIOR TO VIN #1G1YY22G7Y5119656)	7–G14,10
00	Y07 F/SEAT INFL RST SYS (AK5), (67I), (EXC MAN RST SYS (AX4) (EXPORT), (1ST DES)	88893515	1	72.50	BELT KIT, P/SEAT (RETR SI) (OAK) (USED ON VEHICLES PRIOR TO VIN #1G1YY22G7Y5119656)	7–G14,10
00	Y07 F/SEAT INFL RST SYS (AK5), (70I), (EXC MAN RST SYS (AX4) (EXPORT), (2ND DES)	88895172	1	72.50	BELT KIT, P/SEAT (RETR SI) (RED) (DOMESTIC)	7–G14,10
00	Y07 F/SEAT INFL RST SYS (AK5), (67I), (EXC MAN RST SYS (AX4) (EXPORT), (2ND DES)	88895175	1	72.50	BELT KIT, P/SEAT (RETR SI) (OAK) (USED ON VEHICLES W/VIN #1G1YY22G7Y5119656 AND FUTURE)	7–G14,10
00	Y07–37 F/SEAT INFL RST SYS (AK5), (19I), (EXC MAN RST SYS (AX4) (EXPORT), (1ST DES)	88893513	1	72.50	BELT KIT, P/SEAT (RETR SI) (USED ON VEHICLES PRIOR TO VIN #1G1YY22G7Y5119656)	7–G14,10

cardiagn.com

14.875 BELT – BELT KIT – BOLT – BRACKET – COVER – EXTENSION KIT – NUT – PLATE, Seat Belt (Con't)

00	Y07–37 F/SEAT INFL RST SYS (AK5), (92I), (EXC MAN RST SYS (AX4) (EXPORT), (1ST DES)	88893514	1	72.50	BELT KIT, P/SEAT (RETR SI) (USED ON VEHICLES PRIOR TO VIN #1G1YY22G7Y5119656)	7–G14,10
00	Y07–37 F/SEAT INFL RST SYS (AK5), (94I), (EXC MAN RST SYS (AX4) (EXPORT) ..	88894738	1	72.50	BELT KIT, P/SEAT (RETR SI) (RED) .	7–G14,10
00	Y07–37 F/SEAT INFL RST SYS (AK5), (19I), (EXC MAN RST SYS (AX4) (EXPORT), (2ND DES)	88895173	1	72.50	BELT KIT, P/SEAT (RETR SI) (BLACK) (USED ON VEHICLES W/VIN #1G1YY22G7Y5119656 AND FUTURE)	7–G14,10
00	Y07–37 F/SEAT INFL RST SYS (AK5), (92I), (EXC MAN RST SYS (AX4) (EXPORT), (2ND DES)	88895174	1	72.50	BELT KIT, P/SEAT (RETR SI) (PEWTER) (USED ON VEHICLES W/VIN #1G1YY22G7Y5119656 AND FUTURE)	7–G14,10
00–02	Y07–67 (70I)	12458481	1	63.00	BELT KIT, P/SEAT (BKL SI) (RED)	7–G14,14
00	Y67 F/SEAT INFL RST SYS (AK5), (70I), (EXC MAN RST SYS (AX4) (EXPORT), (1ST DES)	88893520	1	72.50	BELT KIT, P/SEAT (RETR SI) (USED ON VEHICLES PRIOR TO VIN #1G1YY22G7Y5119656)	7–G21,7
00	Y67 F/SEAT INFL RST SYS (AK5), (19I), (EXC MAN RST SYS (AX4) (EXPORT), (1ST DES, ...	88893521	1	72.50	BELT KIT, P/SEAT (RETR SI) (BLACK) (USED ON VEHICLES PRIOR TO VIN #1G1YY22G7Y5119656)	7–G21,7
00	Y67 F/SEAT INFL RST SYS (AK5), (92I), (EXC MAN RST SYS (AX4) (EXPORT), (1ST DES)	88893522	1	72.50	BELT KIT, P/SEAT (RETR SI) (PEWTER) (USED ON VEHICLES PRIOR TO VIN #1G1YY22G7Y5119656)	7–G21,7
00	Y67 F/SEAT INFL RST SYS (AK5), (70I), (EXC MAN RST SYS (AX4) (EXPORT), (2ND DES)	88895176	1	72.50	BELT KIT, P/SEAT (RETR SI) (RED) (USED ON VEHICLES W/VIN #1G1YY22G7Y5119656 AND FUTURE)	7–G21,7
00	Y67 F/SEAT INFL RST SYS (AK5), (19I), (EXC MAN RST SYS (AX4) (EXPORT), (2ND DES)	88895177	1	72.50	BELT KIT, P/SEAT (RETR SI) (BLACK) (USED ON VEHICLES W/VIN #1G1YY22G7Y5119656 AND FUTURE)	7–G21,7
00	Y67 F/SEAT INFL RST SYS (AK5), (92I), (EXC MAN RST SYS (AX4) (EXPORT), (2ND DES)	88895178	1	72.50	BELT KIT, P/SEAT (RETR SI) (PEWTER) (USED ON VEHICLES W/VIN #1G1YY22G7Y5119656 AND FUTURE)	7–G21,7
00	Y67 F/SEAT INFL RST SYS (AK5), (67I), (EXC MAN RST SYS (AX4) (EXPORT), (2ND DES)	88895179	1	72.50	BELT KIT, P/SEAT (RETR SI) (OAK) (USED ON VEHICLES W/VIN #1G1YY22G7Y5119656 AND FUTURE)	7–G21,7
01–02	Y07 F/SEAT INFL RST SYS (AK5), (70I), (EXC MAN RST SYS (AX4) (EXPORT), (C88)	88895172	1	72.50	BELT KIT, P/SEAT (RETR SI) (RED) (DOMESTIC)	7–G14,10
01–02	Y07 F/SEAT INFL RST SYS (AK5), (92I), (EXC MAN RST SYS (AX4) (EXPORT), (C88)	88895174	1	72.50	BELT KIT, P/SEAT (RETR SI) (PEWTER)	7–G14,10
01–02	Y07 F/SEAT INFL RST SYS (AK5), (67I), (EXC MAN RST SYS (AX4) (EXPORT), (C88)	88895175	1	72.50	BELT KIT, P/SEAT (RETR SI) (OAK)	7–G14,10
01–02	Y07–37 F/SEAT INFL RST SYS (AK5), (19I), (EXC MAN RST SYS (AX4) (EXPORT), (C88)	88895173	1	72.50	BELT KIT, P/SEAT (RETR SI) (BLACK)	7–G14,10

cardiagn.com

14.875 BELT – BELT KIT – BOLT – BRACKET – COVER – EXTENSION KIT – NUT – PLATE, Seat Belt (Con't)

01–02	Y67 F/SEAT INFL RST SYS (AK5), (70I), (EXC MAN RST SYS (AX4) (EXPORT), (C88)	88895176	1	72.50	BELT KIT, P/SEAT (RETR SI) (RED) .	7–G21,7
01–02	Y67 F/SEAT INFL RST SYS (AK5), (19I), (EXC MAN RST SYS (AX4) (EXPORT)	88895177	1	72.50	BELT KIT, P/SEAT (RETR SI) (BLACK)	7–G21,7
01–02	Y67 F/SEAT INFL RST SYS (AK5), (92I), (EXC MAN RST SYS (AX4) (EXPORT), (C88)	88895178	1	72.50	BELT KIT, P/SEAT (RETR SI) (PEWTER)	7–G21,7
01–02	Y67 F/SEAT INFL RST SYS (AK5), (67I), (EXC MAN RST SYS (AX4) (EXPORT), (C88)	88895179	1	72.50	BELT KIT, P/SEAT (RETR SI) (OAK)	7–G21,7
98–99	Y67 F/SEAT INFL RST SYS (AK5), (92I), (EXC MAN RST SYS (AX4) (EXPORT)	88893518	1	72.50	BELT, D/SEAT (RETR SI) (PEWTER)	7–G21,7
98–99	Y67 F/SEAT INFL RST SYS (AK5), (67I), (EXC MAN RST SYS (AX4) (EXPORT)	88893519	1	72.50	BELT, D/SEAT (RETR SI)	7–G21,7
00	Y67 F/SEAT INFL RST SYS (AK5), (92I), (EXC MAN RST SYS (AX4) (EXPORT), (1ST DES)	88893518	1	72.50	BELT, D/SEAT (RETR SI) (PEWTER) (USED ON VEHICLES PRIOR TO VIN #1G1YY22G7Y5119656, FOR 2ND DES SEE 88895170)	7–G21,7
00	Y67 F/SEAT INFL RST SYS (AK5), (67I), (EXC MAN RST SYS (AX4) (EXPORT), (1ST DES)	88893519	1	72.50	BELT, D/SEAT (RETR SI)	7–G21,7
98–99	Y67 F/SEAT INFL RST SYS (AK5), (67I), (EXC MAN RST SYS (AX4) (EXPORT)	88893523	1	72.50	BELT, P/SEAT (RETR SI) (CAMEL)	7–G21,7
00	Y67 F/SEAT INFL RST SYS (AK5), (67I), (EXC MAN RST SYS (AX4) (EXPORT), (1ST DES)	88893523	1	72.50	BELT, P/SEAT (RETR SI) (CAMEL) (USED ON VEHICLES PRIOR TO VIN #1G1YY22G7Y5119656) ..	7–G21,7
97–02	Y F/SEAT INFL RST SYS (AK5)	20247145	1	*3.19	BOLT, D/SEAT BELT (RETR SI) (M12 X 1.75 X 30)	7–G14,6
97–02	Y F/SEAT INFL RST SYS (AK5)	20247145	1	*3.19	BOLT, D/SEAT BELT RETR (M12 X 1.75 X 30)	7–G14,6
97–98	Y07 F/SEAT INFL RST SYS (AK5)	11516892	1	3.33	BOLT, D/SEAT SHLDR BELT GDE (BLACK) (08.900)	7–G14,11
99–02	Y07–37 F/SEAT INFL RST SYS (AK5)	11516892	1	3.33	BOLT, D/SEAT SHLDR BELT GDE (BLACK) (08.900)	7–G14,11
97–02	Y F/SEAT INFL RST SYS (AK5)	20247145	1	*3.19	BOLT, P/SEAT BELT (RETR SI) (M12 X 1.75 X 30)	7–G14,6
97–02	Y F/SEAT INFL RST SYS (AK5)	20247145	1	*3.19	BOLT, P/SEAT BELT RETR (M12 X 1.75 X 30)	7–G14,6
97–98	Y07	11516892	1	3.33	BOLT, P/SEAT SHLDR BELT GDE (BLACK) (08.900)	7–G14,11
99–00	Y07–37	11516892	1	3.33	BOLT, P/SEAT SHLDR BELT GDE (BLACK) (08.900)	7–G14,11
01–02	Y07–37 F/SEAT INFL RST SYS (AK5)	11516892	1	3.33	BOLT, P/SEAT SHLDR BELT GDE (BLACK) (08.900)	7–G14,11
98–02	Y67	10402798	1	18.50	BRACKET, D/SEAT SHLDR BELT GDE	7–D8,15
98–02	Y67	10402807	1	18.50	BRACKET, P/SEAT SHLDR BELT GDE	7–D8,15
97–98	Y07	10258492	1	3.35	COVER, D/SEAT SHLDR BELT GDE TR (BLACK)	7–G14,15

cardiagn.com

14.875 BELT – BELT KIT – BOLT – BRACKET – COVER – EXTENSION KIT – NUT – PLATE, Seat Belt (Con't)

98–02	Y67 F/SEAT INFL RST SYS (AK5), (EXC MAN RST SYS (AX4) (EXPORT)	10288297	1	3.35	COVER, D/SEAT SHLDR BELT GDE TR	7–G21,23
99–02	Y07–37	10258492	1	3.35	COVER, D/SEAT SHLDR BELT GDE TR (BLACK)	7–G14,15
97–98	Y07	10258492	1	3.35	COVER, P/SEAT SHLDR BELT GDE TR (BLACK)	7–G14,15
98–02	Y67 F/SEAT INFL RST SYS (AK5), (EXC MAN RST SYS (AX4) (EXPORT)	10288297	1	3.35	COVER, P/SEAT SHLDR BELT GDE TR	7–G21,23
99–02	Y07–37	10258492	1	3.35	COVER, P/SEAT SHLDR BELT GDE TR (BLACK)	7–G14,15
97–02	Y	12533427	AR		EXTENSION KIT, ST BELT (BLACK) (9") (FOR BREED BELTS W/O PRESS ON RELEASE BUTTON) (TYPE 10) (REFER TO GMSPO INFORMATION BULLETIN ON SEAT BELT EXTENDERS FOR DETAILED INFORMATION) ...	7–G14,16
97–02	Y	12533428	AR		EXTENSION KIT, ST BELT (BLACK) (15") (FOR BREED BELTS W/O PRESS ON RELEASE BUTTON) (TYPE 10) (REFER TO GMSPO INFORMATION BULLETIN ON SEAT BELT EXTENDERS FOR DETAILED INFORMATION)	7–G14,16
97–02	Y	25604879	1	3.35	NUT, D/SEAT BELT (BKL SI)	7–G14,13
99–02	Y07–67	25604879	1	3.35	NUT, D/SEAT BELT (RETR SI)	7–G14,13
98–02	Y67	10201699	1	*.88	NUT, D/SEAT SHLDR BELT GDE (M10.0X1.50THD)	7–G21,16
97–02	Y	25604879	1	3.35	NUT, P/SEAT BELT (BKL SI)	7–G14,13
97–02	Y	25604879	1	3.35	NUT, P/SEAT BELT (RETR SI)	7–G14,13
98–02	Y67	10201699	1	*.88	NUT, P/SEAT SHLDR BELT GDE (M10.0X1.50THD)	7–G21,16
97–98	Y	15734139	2	5.30	PLATE, D/SEAT BELT ANC (BKL SI) (OVAL) (16.714)	7–G14,5
99–02	Y	15734139	1	5.30	PLATE, D/SEAT BELT ANC (BKL SI) (OVAL) (16.714)	7–G14,5
97–02	Y F/SEAT INFL RST SYS (AK5)	10403689	1	3.35	PLATE, D/SEAT BELT RETR ANC	7–G14,8
97–02	Y F/SEAT INFL RST SYS (AK5)	10403689	1	3.35	PLATE, P/SEAT BELT RETR ANC	7–G14,8
97–98	Y	15734139	2	5.30	PLATE, P/SEAT BELT RETR ANC (OVAL) (16.714)	7–G14,5
99–02	Y	15734139	1	5.30	PLATE, P/SEAT BELT RETR ANC (OVAL) (16.714)	7–G14,5
	*EXPORT****************EXPORT****************EXPORT****************EXPORT****************EXPORT*					
97–98	Y07 F/SEAT INFL RST SYS (AK5), MAN RST SYS (AX4) (EXPORT), (19I)	10434373	1	72.50	BELT, D/SEAT (RETR SI) (BLACK)	7–G14,10
97–99	Y07 F/SEAT INFL RST SYS (AK5), MAN RST SYS (AX4) (EXPORT), (92I)	10434374	1	72.50	BELT, D/SEAT (RETR SI) (PEWTER)	7–G14,10
97–00	Y07 F/SEAT INFL RST SYS (AK5), MAN RST SYS (AX4) (EXPORT), (94I)	10443585	1	72.50	BELT, D/SEAT (RETR SI) (RED) ..	7–G14,10
98–99	Y07 F/SEAT INFL RST SYS (AK5), MAN RST SYS (AX4) (EXPORT), (67I)	10434375	1	72.50	BELT, D/SEAT (RETR SI) (OAK) ..	7–G14,10

cardiagn.com

14.875 BELT – BELT KIT – BOLT – BRACKET – COVER – EXTENSION KIT – NUT – PLATE, Seat Belt (Con't)

98–99	Y67 F/SEAT INFL RST SYS (AK5), MAN RST SYS (AX4) (EXPORT), (19I)	10434447	1	72.50	BELT, D/SEAT (RETR SI) (BLACK)	7–G21,7
98–99	Y67 F/SEAT INFL RST SYS (AK5), MAN RST SYS (AX4) (EXPORT), (92I)	10434448	1	72.50	BELT, D/SEAT (RETR SI)	7–G21,7
98–99	Y67 F/SEAT INFL RST SYS (AK5), MAN RST SYS (AX4) (EXPORT), (67I)	10434449	1	72.50	BELT, D/SEAT (RETR SI)	7–G21,7
98–00	Y67 F/SEAT INFL RST SYS (AK5), MAN RST SYS (AX4) (EXPORT), (94I)	10443583	1	72.50	BELT, D/SEAT (RETR SI) (RED) ..	7–G21,7
99	Y07–37 F/SEAT INFL RST SYS (AK5), MAN RST SYS (AX4) (EXPORT), (19I)	10434373	1	72.50	BELT, D/SEAT (RETR SI) (BLACK)	7–G14,10
99	Y37 F/SEAT INFL RST SYS (AK5), MAN RST SYS (AX4) (EXPORT), (92I)	10434374	1	72.50	BELT, D/SEAT (RETR SI) (PEWTER)	7–G14,10
99–00	Y37 F/SEAT INFL RST SYS (AK5), MAN RST SYS (AX4) (EXPORT), (94I)	10443585	1	72.50	BELT, D/SEAT (RETR SI) (RED) ..	7–G14,10
00	Y07 F/SEAT INFL RST SYS (AK5), MAN RST SYS (AX4) (EXPORT), (70I), (2ND DES)	10409877	1	72.50	BELT, D/SEAT (RETR SI) (RED) (USED ON VEHICLES PRIOR TO VIN #1G1YY22G7Y5119656) ..	7–G14,10
00	Y07 F/SEAT INFL RST SYS (AK5), MAN RST SYS (AX4) (EXPORT), (70I), (1ST DES)	10434372	1	72.50	BELT, D/SEAT (RETR SI) (RED) (USED ON VEHICLES PRIOR TO VIN #1G1YY22G7Y5119656) ..	7–G14,10
00	Y07 F/SEAT INFL RST SYS (AK5), MAN RST SYS (AX4) (EXPORT), (92I), (1ST DES)	10434374	1	72.50	BELT, D/SEAT (RETR SI) (PEWTER) (USED ON VEHICLES PRIOR TO VIN #1G1YY22G7Y5119656) ..	7–G14,10
00	Y07 F/SEAT INFL RST SYS (AK5), MAN RST SYS (AX4) (EXPORT), (67I), (1ST DES)	10434275	1	72.50	BELT, D/SEAT (RETR SI) (OAK) (USED ON VEHICLES PRIOR TO VIN #1G1YY22G7Y5119656) ..	7–G14,10
00	Y07 F/SEAT INFL RST SYS (AK5), MAN RST SYS (AX4) (EXPORT), (70I), (2ND DES)	10442977	1	72.50	BELT, D/SEAT (RETR SI) (RED) (USED ON VEHICLES W/VIN #1G1YY22G7Y5119656 AND FUTURE)	7–G14,10
00	Y07 F/SEAT INFL RST SYS (AK5), MAN RST SYS (AX4) (EXPORT), (92I), (2ND DES)	10442979	1	72.50	BELT, D/SEAT (RETR SI) (PEWTER) (USED ON VEHICLES W/VIN #1G1YY22G7Y5119656 AND FUTURE)	7–G14,10
00	Y07 F/SEAT INFL RST SYS (AK5), MAN RST SYS (AX4) (EXPORT), (67I), (2ND DES)	10442980	1	72.50	BELT, D/SEAT (RETR SI) (OAK) (USED ON VEHICLES W/VIN #1G1YY22G7Y5119656 AND FUTURE)	7–G14,10
00	Y07–37 F/SEAT INFL RST SYS (AK5), MAN RST SYS (AX4) (EXPORT), (19I), (1ST DES)	10434373	1	72.50	BELT, D/SEAT (RETR SI) (BLACK) (USED ON VEHICLES PRIOR TO VIN #1G1YY22G7Y5119656) ..	7–G14,10
00	Y07–37 F/SEAT INFL RST SYS (AK5), MAN RST SYS (AX4) (EXPORT), (19I), (2ND DES)	10442978	1	72.50	BELT, D/SEAT (RETR SI) (BLACK) (USED ON VEHICLES W/VIN #1G1YY22G7Y5119656 AND FUTURE)	7–G14,10
00	Y67 F/SEAT INFL RST SYS (AK5), MAN RST SYS (AX4) (EXPORT), (70I), (1ST DES)	10434446	1	72.50	BELT, D/SEAT (RETR SI) (USED ON VEHICLES PRIOR TO VIN #1G1YY22G7Y5119656)	7–G21,7
00	Y67 F/SEAT INFL RST SYS (AK5), MAN RST SYS (AX4) (EXPORT), (19I), (1ST DES)	10434447	1	72.50	BELT, D/SEAT (RETR SI) (BLACK) (USED ON VEHICLES PRIOR TO VIN #1G1YY22G7Y5119656) ..	7–G21,7

cardiagn.com

14.875 BELT – BELT KIT – BOLT – BRACKET – COVER – EXTENSION KIT – NUT – PLATE, Seat Belt(Con't)

00	Y67 F/SEAT INFL RST SYS (AK6), MAN RST SYS (AX4) (EXPORT), (92I), (1ST DES)	10434448	1	72.50	BELT, D/SEAT (RETR SI) (USED ON VEHICLES PRIOR TO VIN #1G1YY22G7Y6119656)	7–G21,7
00	Y67 F/SEAT INFL RST SYS (AK6), MAN RST SYS (AX4) (EXPORT), (67I), (1ST DES)	10434449	1	72.50	BELT, D/SEAT (RETR SI) (USED ON VEHICLES PRIOR TO VIN #1G1YY22G7Y6119656)	7–G21,7
00	Y67 F/SEAT INFL RST SYS (AK6), MAN RST SYS (AX4) (EXPORT), (70I), (2ND DES)	10442984	1	72.50	BELT, D/SEAT (RETR SI) (RED) (USED ON VEHICLES W/VIN #1G1YY22G7Y6119656 AND FUTURE)	7–G21,7
00	Y67 F/SEAT INFL RST SYS (AK6), MAN RST SYS (AX4) (EXPORT), (19I), (2ND DES)	10442985	1	72.50	BELT, D/SEAT (RETR SI) (BLACK) (USED ON VEHICLES W/VIN #1G1YY22G7Y6119656 AND FUTURE)	7–G21,7
00	Y67 F/SEAT INFL RST SYS (AK6), MAN RST SYS (AX4) (EXPORT), (92I), (2ND DES)	10442986	1	72.50	BELT, D/SEAT (RETR SI) (PEWTER) (USED ON VEHICLES W/VIN #1G1YY22G7Y6119656 AND FUTURE)	7–G21,7
00	Y67 F/SEAT INFL RST SYS (AK6), MAN RST SYS (AX4) (EXPORT), (67I), (2ND DES)	10442987	1	72.50	BELT, D/SEAT (RETR SI) (OAK) (USED ON VEHICLES W/VIN #1G1YY22G7Y6119656 AND FUTURE)	7–G21,7
01–02	Y07 F/SEAT INFL RST SYS (AK6), MAN RST SYS (AX4) (EXPORT), (70I)	10442977	1	72.50	BELT, D/SEAT (RETR SI) (RED) ..	7–G14,10
01–02	Y07 F/SEAT INFL RST SYS (AK6), MAN RST SYS (AX4) (EXPORT), (19I)	10442978	1	72.50	BELT, D/SEAT (RETR SI) (BLACK)	7–G14,10
01–02	Y07 37 F/SEAT INFL RST SYS (AK6), MAN RST SYS (AX4) (EXPORT), (92I)	10442979	1	72.50	BELT, D/SEAT (RETR SI) (PEWTER)	7–G14,10
01–02	Y07 -37 F/SEAT INFL RST SYS (AK6), MAN RST SYS (AX4) (EXPORT), (67I)	10442980	1	72.50	BELT, D/SEAT (RETR SI) (OAK) ..	7–G14,10
01–02	Y67 F/SEAT INFL RST SYS (AK6), MAN RST SYS (AX4) (EXPORT), (70I)	10442984	1	72.50	BELT, D/SEAT (RETR SI) (RED) ..	7–G21,7
01–02	Y67 F/SEAT INFL RST SYS (AK6), MAN RST SYS (AX4) (EXPORT), (19I)	10442985	1	72.50	BELT, D/SEAT (RETR SI) (BLACK)	7–G21,7
01–02	Y67 F/SEAT INFL RST SYS (AK6), MAN RST SYS (AX4) (EXPORT), (92I)	10442986	1	72.50	BELT, D/SEAT (RETR SI) (PEWTER)	7–G21,7
01–02	Y67 F/SEAT INFL RST SYS (AK6), MAN RST SYS (AX4) (EXPORT), (67I)	10442987	1	72.50	BELT, D/SEAT (RETR SI) (OAK) ..	7–G21,7
07–08	Y07 F/SEAT INFL RST SYS (AK6), MAN RST SYS (AX4) (EXPORT), (19I)	10434539	1	72.50	BELT, P/SEAT (RETR SI) (BLACK)	7–G14,10
07–08	Y07 F/SEAT INFL RST SYS (AK6), MAN RST SYS (AX4) (EXPORT), (92I)	10434540	1	72.50	BELT, P/SEAT (RETR SI) (PEWTER)	7–G14,10
07–00	Y07 F/SEAT INFL RST SYS (AK6), MAN RST SYS (AX4) (EXPORT), (94I)	10443591	1	72.50	BELT, P/SEAT (RETR SI) (RED) .	7–G14,10
07–00	Y37 F/SEAT INFL RST SYS (AK6), MAN RST SYS (AX4) (EXPORT), (94I)	10443591	1	72.50	BELT, P/SEAT (RETR SI) (RED) ..	7–G14,10

cardiagn.com

14.875 BELT – BELT KIT – BOLT – BRACKET – COVER – EXTENSION KIT – NUT – PLATE, Seat Belt(Con't)

98–99	Y07 MAN RST SYS (AX4) (EXPORT), (67I)	10434541	1	72.50	BELT, P/SEAT (RETR SI) (OAK) ..	7–G14,10
98–99	Y67 F/SEAT INFL RST SYS (AK5), MAN RST SYS (AX4) (EXPORT), (19I)	10434574	1	72.50	BELT, P/SEAT (RETR SI) (BLACK)	7–G21,7
98–99	Y67 F/SEAT INFL RST SYS (AK5), MAN RST SYS (AX4) (EXPORT), (92I)	10434575	1	72.50	BELT, P/SEAT (RETR SI) (PEWTER)	7–G21,7
98–99	Y67 F/SEAT INFL RST SYS (AK5), MAN RST SYS (AX4) (EXPORT), (67I)	10434576	1	72.50	BELT, P/SEAT (RETR SI) (OAK) ..	7–G21,7
98–00	Y67 F/SEAT INFL RST SYS (AK5), MAN RST SYS (AX4) (EXPORT), (94I)	10443589	1	72.50	BELT, P/SEAT (RETR SI) (RED) ..	7–G21,7
99	Y07–37 F/SEAT INFL RST SYS (AK5), MAN RST SYS (AX4) (EXPORT), (19I)	10434539	1	72.50	BELT, P/SEAT (RETR SI) (BLACK)	7–G14,10
99	Y07–37 F/SEAT INFL RST SYS (AK5), MAN RST SYS (AX4) (EXPORT), (92I)	10434540	1	72.50	BELT, P/SEAT (RETR SI) (PEWTER)	7–G14,10
00	Y07 F/SEAT INFL RST SYS (AK5), MAN RST SYS (AX4) (EXPORT), (70I), (1ST DES)	10434538	1	72.50	BELT, P/SEAT (RETR SI) (RED) (USED ON VEHICLES PRIOR TO VIN #1G1YY22G7Y5119656) ..	7–G14,10
00	Y07 MAN RST SYS (AX4) (EXPORT), (67I), (1ST DES)	10434541	1	72.50	BELT, P/SEAT (RETR SI) (OAK) ..	7–G14,10
00–02	Y07 F/SEAT INFL RST SYS (AK5), (EXC C88), (70I), MAN RST SYS (AX4) (EXPORT)	10441294	1	72.50	BELT, P/SEAT (RETR SI) (RED) ..	7–G14,10
00–02	Y07 F/SEAT INFL RST SYS (AK5), (EXC C88), (19I), MAN RST SYS (AX4) (EXPORT)	10441295	1	72.50	BELT, P/SEAT (RETR SI) (BLACK)	7–G14,10
00–02	Y07 F/SEAT INFL RST SYS (AK5), (EXC C88), (92I), MAN RST SYS (AX4) (EXPORT)	10441296	1	72.50	BELT, P/SEAT (RETR SI) (PEWTER)	7–G14,10
00–02	Y07 F/SEAT INFL RST SYS (AK5), (EXC C88), (67I), MAN RST SYS (AX4) (EXPORT)	10441297	1	72.50	BELT, P/SEAT (RETR SI) (OAK) ..	7–G14,10
00	Y07 F/SEAT INFL RST SYS (AK5), MAN RST SYS (AX4) (EXPORT), (70I), (2ND DES)	10442989	1	72.50	BELT, P/SEAT (RETR SI) (RED) (USED ON VEHICLES W/VIN #1G1YY22G7Y5119656 AND FUTURE)	7–G14,10
00	Y07 F/SEAT INFL RST SYS (AK5), MAN RST SYS (AX4) (EXPORT), (67I), (2ND DES)	10442992	1	72.50	BELT, P/SEAT (RETR SI) (OAK) (USED ON VEHICLES W/VIN #1G1YY22G7Y5119656 AND FUTURE)	7–G14,10
00	Y07–37 F/SEAT INFL RST SYS (AK5), MAN RST SYS (AX4) (EXPORT), (19I), (1ST DES)	10434539	1	72.50	BELT, P/SEAT (RETR SI) (BLACK) (USED ON VEHICLES PRIOR TO VIN #1G1YY22G7Y5119656) ..	7–G14,10
00	Y07–37 F/SEAT INFL RST SYS (AK5), MAN RST SYS (AX4) (EXPORT), (92I), (1ST DES)	10434540	1	72.50	BELT, P/SEAT (RETR SI) (PEWTER) (USED ON VEHICLES PRIOR TO VIN #1G1YY22G7Y5119656) ..	7–G14,10

cardiagn.com

14.875 BELT – BELT KIT – BOLT – BRACKET – COVER – EXTENSION KIT – NUT – PLATE, Seat Belt(Con't)

00	Y07–37 F/SEAT INFL RST SYS (AK5), MAN RST SYS (AX4) (EXPORT), (19I), (2ND DES)	10442990	1	72.50	BELT, P/SEAT (RETR SI) (BLACK) (USED ON VEHICLES W/VIN #1G1YY22G7Y5119656 AND FUTURE)	7–G14,10
00	Y07–37 F/SEAT INFL RST SYS (AK5), MAN RST SYS (AX4) (EXPORT), (92I), (2ND DES)	10442991	1	72.50	BELT, P/SEAT (RETR SI) (PEWTER) (USED ON VEHICLES W/VIN #1G1YY22G7Y5119656 AND FUTURE)	7–G14,10
00	Y67 F/SEAT INFL RST SYS (AK5). MAN RST SYS (AX4) (EXPORT), (70I), (1ST DES)	10434573	1	72.50	BELT, P/SEAT (RETR SI) (RED) (USED ON VEHICLES PRIOR TO VIN #1G1YY22G7Y5119656) ..	7–G21,7
00	Y67 F/SEAT INFL RST SYS (AK5), MAN RST SYS (AX4) (EXPORT), (19I), (1ST DES)	10434574	1	72.50	BELT, P/SEAT (RETR SI) (BLACK)	7–G21,7
00	Y67 F/SEAT INFL RST SYS (AK5), MAN RST SYS (AX4) (EXPORT), (92I), (1ST DES)	10434575	1	72.50	BELT, P/SEAT (RETR SI) (PEWTER) (USED ON VEHICLES PRIOR TO VIN #1G1YY22G7Y5119656) ..	7–G21,7
00	Y67 F/SEAT INFL RST SYS (AK5), MAN RST SYS (AX4) (EXPORT), (67I), (1ST DES)	10434576	1	72.50	BELT, P/SEAT (RETR SI) (OAK) (USED ON VEHICLES PRIOR TO VIN #1G1YY22G7Y5119656) ..	7–G21,7
00–02	Y67 F/SEAT INFL RST SYS (AK5), (EXC C88), (70I), MAN RST SYS (AX4) (EXPORT)	10441509	1	72.50	BELT, P/SEAT (RETR SI) (RED) ..	7–G21,7
00–02	Y67 F/SEAT INFL RST SYS (AK5), (EXC C88), (19I), MAN RST SYS (AX4) (EXPORT)	10441510	1	72.50	BELT, P/SEAT (RETR SI) (BLACK)	7–G21,7
00–02	Y67 F/SEAT INFL RST SYS (AK5), (EXC C88), (92I), MAN RST SYS (AX4) (EXPORT)	10441511	1	72.50	BELT, P/SEAT (RETR SI) (PEWTER)	7–G21,7
00–02	Y67 F/SEAT INFL RST SYS (AK5), (EXC C88), (67I), MAN RST SYS (AX4) (EXPORT)	10441512	1	72.50	BELT, P/SEAT (RETR SI) (OAK) ..	7–G21,7
00	Y67 F/SEAT INFL RST SYS (AK5), MAN RST SYS (AX4) (EXPORT), (70I), (2ND DES)	10443013	1	72.50	BELT, P/SEAT (RETR SI) (RED) (USED ON VEHICLES W/VIN #1G1YY22G7Y5119656 AND FUTURE)	7–G14,10
00	Y67 F/SEAT INFL RST SYS (AK5), MAN RST SYS (AX4) (EXPORT), (19I), (2ND DES)	10443014	1	72.50	BELT, P/SEAT (RETR SI) (BLACK) (USED ON VEHICLES W/VIN #1G1YY22G7Y5119656 AND FUTURE)	7–G14,10
00	Y67 F/SEAT INFL RST SYS (AK5), MAN RST SYS (AX4) (EXPORT), (92I), (2ND DES)	10443015	1	72.50	BELT, P/SEAT (RETR SI) (PEWTER) (USED ON VEHICLES W/VIN #1G1YY22G7Y5119656 AND FUTURE)	7–G14,10
00	Y67 F/SEAT INFL RST SYS (AK5), MAN RST SYS (AX4) (EXPORT), (67I), (2ND DES)	10443016	1	72.50	BELT, P/SEAT (RETR SI) (OAK) (USED ON VEHICLES W/VIN #1G1YY22G7Y5119656 AND FUTURE)	7–G14,10
01–02	Y07 F/SEAT INFL RST SYS (AK5). MAN RST SYS (AX4) (EXPORT), (67I), (C88)	10442992	1	72.50	BELT, P/SEAT (RETR SI) (OAK) ..	7–G14,10
01–02	Y07–37 F/SEAT INFL RST SYS (AK5), MAN RST SYS (AX4) (EXPORT), (70I), (C88)	10443013	1	72.50	BELT, P/SEAT (RETR SI) (RED) ..	7–G14,10

cardiagn.com

14.875 BELT – BELT KIT – BOLT – BRACKET – COVER – EXTENSION KIT – NUT – PLATE, Seat Belt(Con't)

01–02	Y07–37 F/SEAT INFL RST SYS (AK5), MAN RST SYS (AX4) (EXPORT), (19I), (C88)	10443014	1	72.50	BELT, P/SEAT (RETR SI) (BLACK)	7–G14,10
01–02	Y07–37 F/SEAT INFL RST SYS (AK5), MAN RST SYS (AX4) (EXPORT), (92I), (C88)	10443015	1	72.50	BELT, P/SEAT (RETR SI) (PEWTER)	7–G14,10
01–02	Y07–37 F/SEAT INFL RST SYS (AK5), MAN RST SYS (AX4) (EXPORT), (67I), (C88)	10443016	1	72.50	BELT, P/SEAT (RETR SI) (OAK) ..	7–G14,10
01–02	Y67 F/SEAT INFL RST SYS (AK5), MAN RST SYS (AX4) (EXPORT), (70I), (C88)	10442989	1	72.50	BELT, P/SEAT (RETR SI) (RED) ..	7–G14,10
01–02	Y67 F/SEAT INFL RST SYS (AK5), MAN RST SYS (AX4) (EXPORT), (19I), (C88)	10442990	1	72.50	BELT, P/SEAT (RETR SI) (BLACK)	7–G14,10
01–02	Y67 F/SEAT INFL RST SYS (AK5), MAN RST SYS (AX4) (EXPORT), (92I), (C88)	10442991	1	72.50	BELT, P/SEAT (RETR SI) (PEWTER)	7–G14,10

14.880 COVER, Front Seat Cushion

97–98	Y RECL FRT BKT ST, LUXURY (AQ9), (193)	12455447	1	216.00	COVER, D/SEAT CUSH (BLACK) (14.800)	7–F2,11
97–98	Y RECL FRT BKT ST, LUXURY (AQ9), (943)	12455448	1	216.00	COVER, D/SEAT CUSH (RED) (14.800)	7–F2,11
97–98	Y RECL FRT BKT ST, LUXURY (AQ9), (923)	12455449	1	216.00	COVER, D/SEAT CUSH (PEWTER) .	7–F2,11
97–98	Y MAN RECL FRT BKT ST, DELUXE (AR9), (193)	12455465	1	216.00	COVER, D/SEAT CUSH (BLACK) (14.800)	7–F7,11
97–98	Y MAN RECL FRT BKT ST, DELUXE (AR9), (923)	12455467	1	216.00	COVER, D/SEAT CUSH (PEWTER) (14.800)	7–F7,11
97–99	Y07–67 MAN RECL FRT BKT ST, DELUXE (AR9), (943) ...	12455466	1	216.00	COVER, D/SEAT CUSH (RED) ...	7–F7,11
98	Y RECL FRT BKT ST, LUXURY (AQ9), (673)	12455450	1	216.00	COVER, D/SEAT CUSH (CAMEL) (14.800)	7–F14,11
98	Y MAN RECL FRT BKT ST, DELUXE (AR9), (673)	12455468	1	216.00	COVER, D/SEAT CUSH (CAMEL) (14.800)	7–F7,11
98	Y67 RECL FRT BKT ST, LUXURY (AQ9), INDY PACE CAR (Z4Z), (194)	10413523	1	216.00	COVER, D/SEAT CUSH (YELLOW FRONT W/BLACK BACK)	7–F14,11
99–02	Y07–67 RECL FRT BKT ST, LUXURY (AQ9), (193)	12455447	1	216.00	COVER, D/SEAT CUSH (BLACK) (14.800)	7–F2,11
99	Y07–67 RECL FRT BKT ST, LUXURY (AQ9), (943)	12455448	1	216.00	COVER, D/SEAT CUSH (RED) (14.800)	7–F2,11
99–02	Y07–67 RECL FRT BKT ST, LUXURY (AQ9), (923)	12455449	1	216.00	COVER, D/SEAT CUSH (PEWTER) .	7–F2,11
99–02	Y07–67 RECL FRT BKT ST, LUXURY (AQ9), (673)	12455450	1	216.00	COVER, D/SEAT CUSH (CAMEL) (14.800)	7–F14,11
99–02	Y07–67 MAN RECL FRT BKT ST, DELUXE (AR9), (193) ...	12455465	1	216.00	COVER, D/SEAT CUSH (BLACK) (14.800)	7–F7,11
99–02	Y07–67 MAN RECL FRT BKT ST, DELUXE (AR9), (923) ...	12455467	1	216.00	COVER, D/SEAT CUSH (PEWTER) (14.800)	7–F7,11
99–02	Y07–67 MAN RECL FRT BKT ST, DELUXE (AR9), (673) ...	12455468	1	216.00	COVER, D/SEAT CUSH (CAMEL) (14.800)	7–F7,11
00–02	Y07–67 RECL FRT BKT ST, LUXURY (AQ9), (703)	12455451	1	216.00	COVER, D/SEAT CUSH (RED) ...	7–F21,11
00–02	Y07–67 MAN RECL FRT BKT ST, DELUXE (AR9), (703) ...	12455469	1	216.00	COVER, D/SEAT CUSH (RED) ...	7–F7,11
01–02	Y37 MAN RECL FRT BKT ST, DELUXE (AR9), (194)	12455499	1	216.00	COVER, D/SEAT CUSH (BLACK) .	7–F7,11

cardiagn.com

14.880 COVER, Front Seat Cushion (Con't)

01–02	Y37 MAN RECL FRT BKT ST, DELUXE (AR9), (704)	12455502	1	216.00	COVER, D/SEAT CUSH (RED) ...	7–F7,11
97–98	Y 6–WAY PWR P/SEAT ADJR (AG2), RECL FRT BKT ST, LUXURY (AQ9), (193)	12455447	1	216.00	COVER, P/SEAT CUSH (BLACK) (14.800)	7–F2,11
97–98	Y 6–WAY PWR P/SEAT ADJR (AG2), RECL FRT BKT ST, LUXURY (AQ9), (943)	12455448	1	216.00	COVER, P/SEAT CUSH (RED) (14.800)	7–F2,11
97–98	Y 6–WAY PWR P/SEAT ADJR (AG2), RECL FRT BKT ST, LUXURY (AQ9), (923)	12455449	1	216.00	COVER, P/SEAT CUSH (PEWTER) .	7–F2,11
97–02	Y MAN RECL FRT BKT ST, DELUXE (AR9), (193)	12455465	1	216.00	COVER, P/SEAT CUSH (BLACK) (14.800)	7–F7,11
97–98	Y MAN RECL FRT BKT ST, DELUXE (AR9), (923)	12455467	1	216.00	COVER, P/SEAT CUSH (PEWTER) (14.800)	7–F7,11
97–99	Y07–67 MAN RECL FRT BKT ST, DELUXE (AR9), (943) ...	12455466	1	216.00	COVER, P/SEAT CUSH (RED) ...	7–F7,11
98	Y 6–WAY PWR P/SEAT ADJR (AG2), RECL FRT BKT ST, LUXURY (AQ9), (673)	12455450	1	216.00	COVER, P/SEAT CUSH (CAMEL) (14.800)	7–F14,11
98	Y MAN RECL FRT BKT ST, DELUXE (AR9), (673)	12455468	1	216.00	COVER, P/SEAT CUSH (CAMEL) (14.800)	7–F7,11
98	Y67 RECL FRT BKT ST, LUXURY (AQ9), INDY PACE CAR (Z4Z), (194)	10413523	1	216.00	COVER, P/SEAT CUSH (YELLOW FRONT W/BLACK BACK)	7–F14,11
99–02	Y07–67 6–WAY PWR P/SEAT ADJR (AG2), RECL FRT BKT ST, LUXURY (AQ9), (193) ...	12455447	1	216.00	COVER, P/SEAT CUSH (BLACK) (14.800)	7–F2,11
99	Y07–67 6–WAY PWR P/SEAT ADJR (AG2), RECL FRT BKT ST, LUXURY (AQ9), (943) ...	12455448	1	216.00	COVER, P/SEAT CUSH (RED) (14.800)	7–F2,11
99–02	Y07–67 6–WAY PWR P/SEAT ADJR (AG2), RECL FRT BKT ST, LUXURY (AQ9), (923) ...	12455449	1	216.00	COVER, P/SEAT CUSH (PEWTER) .	7–F2,11
99–02	Y07–67 6–WAY PWR P/SEAT ADJR (AG2), RECL FRT BKT ST, LUXURY (AQ9), (673) ...	12455450	1	216.00	COVER, P/SEAT CUSH (CAMEL) (14.800)	7–F14,11
99–02	Y07–67 MAN RECL FRT BKT ST, DELUXE (AR9), (923) ...	12455467	1	216.00	COVER, P/SEAT CUSH (PEWTER) (14.800)	7–F7,11
99–02	Y07–67 MAN RECL FRT BKT ST, DELUXE (AR9), (673) ...	12455468	1	216.00	COVER, P/SEAT CUSH (CAMEL) (14.800)	7–F7,11
00–01	Y07–67 RECL FRT BKT ST, LUXURY (AQ9), (703)	12455451	1	216.00	COVER, P/SEAT CUSH (RED) ...	7–F21,11
01–02	Y37 MAN RECL FRT BKT ST, DELUXE (AR9), (194)	12455499	1	216.00	COVER, P/SEAT CUSH (BLACK) .	7–F7,11
01–02	Y37 MAN RECL FRT BKT ST, DELUXE (AR9), (704)	12455502	1	216.00	COVER, P/SEAT CUSH (RED) ...	7–F7,11

14.890 PAD – RETAINER, Front Seat Cushion

97–02	Y MAN RECL FRT BKT ST, DELUXE (AR9)	10272680	1	50.50	PAD, D/SEAT CUSH	7–F7,12
97–01	Y RECL FRT BKT ST, LUXURY (AQ9)	10273420	1	50.50	PAD, D/SEAT CUSH	7–F2,12
02	Y07	10273420	1	50.50	PAD, D/SEAT CUSH	7–F2,12
97–02	Y MAN RECL FRT BKT ST, DELUXE (AR9)	10272680	1	50.50	PAD, P/SEAT CUSH	7–F7,12
97–02	Y RECL FRT BKT ST, LUXURY (AQ9)	10273420	1	50.50	PAD, P/SEAT CUSH	7–F2,12
97–02	Y	20511451	2	3.45	RETAINER, P/SEAT BK CUSH PAD (12.800)	7–F2,17

© 2001 GENERAL MOTORS SERVICE PARTS OPERATIONS–CHEVROLET–15Y

cardiagn.com

15.024 NUT – RETAINER – SHADE – SUPPORT, Rear Seat to Back Window Panel

98–02	Y	10410398	AR	*.51	NUT, LUGG SHADE SUPT (M6X1.0 ITR "D" THD) (10.512)	
97–02	Y07	10209685	2	3.45	RETAINER, LUGG SHADE (15.222)	7–J10,6
97–02	Y07 R/CMPT SECURITY SHADE (D42)	10269718	1	148.00	SHADE, LUGG (INCLS NET, SHADE, BAG)	7–J10,3
97–02	Y07	1027194	2	10.10	SUPPORT, LUGG SHADE (RR)	7–J10,1

15.100 CARPET – MOLDING – PANEL – RETAINER, Rear Quarter

98–00	Y67 (19I)	10298499	LH	29.25	CARPET, RR W/H & BODY L/PLR FIN PNL (BLACK)	7–I12,14
98–00	Y67 (19I)	10298500	RH	29.25	CARPET, RR W/H & BODY L/PLR FIN PNL (BLACK)	7–I12,17
98–00	Y67 (92I)	10298501	LH	29.25	CARPET, RR W/H & BODY L/PLR FIN PNL (PEWTER)	7–I12,14
98–00	Y67 (92I)	10298502	RH	29.25	CARPET, RR W/H & BODY L/PLR FIN PNL (PEWTER)	7–I12,17
98–99	Y67 (94I)	10298503	LH	29.25	CARPET, RR W/H & BODY L/PLR FIN PNL (RED)	7–I12,14
98–99	Y67 (94I)	10298504	RH	29.25	CARPET, RR W/H & BODY L/PLR FIN PNL (RED)	7–I12,17
98–00	Y67 (67I)	10298505	LH	29.25	CARPET, RR W/H & BODY L/PLR FIN PNL (CAMEL)	7–I12,14
98–00	Y67 (67I)	10298506	RH	29.25	CARPET, RR W/H & BODY L/PLR FIN PNL (CAMEL)	7–I12,17
00	Y67 (70I)	10409424	LH	29.25	CARPET, RR W/H & BODY L/PLR FIN PNL (RED)	7–I12,14
00	Y67 (70I)	10409425	RH	29.25	CARPET, RR W/H & BODY L/PLR FIN PNL (RED)	7–I12,17
01–02	Y67 (19I)	10439062	LH	29.25	CARPET, RR W/H & BODY L/PLR FIN PNL (BLACK)	7–J7,14
01–02	Y67 (92I)	10439063	LH	29.25	CARPET, RR W/H & BODY L/PLR FIN PNL (PEWTER)	7–J7,14
01–02	Y67 (67I)	10439064	LH	29.25	CARPET, RR W/H & BODY L/PLR FIN PNL (OAK)	7–J7,14
01–02	Y67 (70I)	10439065	LH	29.25	CARPET, RR W/H & BODY L/PLR FIN PNL (RED)	7–J7,14
01–02	Y67 (19I)	10439067	RH	29.25	CARPET, RR W/H & BODY L/PLR FIN PNL (BLACK)	7–J7,17
01–02	Y67 (92I)	10439068	RH	29.25	CARPET, RR W/H & BODY L/PLR FIN PNL (PEWTER)	7–J7,17
01–02	Y67 (67I)	10439069	RH	29.25	CARPET, RR W/H & BODY L/PLR FIN PNL (OAK)	7–J7,17
01–02	Y67 (70I)	10439070	RH	29.25	CARPET, RR W/H & BODY L/PLR FIN PNL (RED)	7–J7,17
97–02	Y	10274637	LH	14.60	MOLDING, BODY SI FRT GARN (BLACK)	7–E22,51
97–02	Y	10274638	RH	14.60	MOLDING, BODY SI FRT GARN (BLACK)	7–E22,51
99–02	Y37	10258567	LH	80.25	PANEL, BODY SI TR ((BLACK))	7–H2,1
99–02	Y37	10258568	RH	80.25	PANEL, BODY SI TR (BLACK)	7–H2,1
97–02	Y	15748479	2	*.62	RETAINER, BODY SI FRT G/MLDG (13.0MM WIDE) (YELLOW) (U–BASE) (16.575)	5–D7,19
99–02	Y37	332364	2	*.52	RETAINER, BODY SI T/PNL (08.154)	4–K2,11

cardiagn.com

15.100 CARPET – MOLDING – PANEL – RETAINER, Rear Quarter (Con't)

99–02	Y37	10417444	2	3.33	RETAINER, BODY SI T/PNL	4–K2,42
99–02	Y37	15748479	8	*.62	RETAINER, BODY SI T/PNL (13.0MM WIDE) (YELLOW) (U–BASE) (16.575)	5–D7,19

15.222 BOLT – CARPET – COVER – INSULATOR – LATCH – NET – NUT – PANEL – PLATE – RETAINER – SEAL – STRIKER – TRIM, Rear Compartment Trim

97	Y	10180421	8	*.74	BOLT, R/CMPT PNL STOW PKT CVR LAT STKR (M4.2X1.41X16) (SCREW–ROUND HD) (08.977)	
97–02	Y07 (19I)	10433845	1	361.00	CARPET, R/CMPT FLR PNL (BLACK) (WHEN REPLACING 99 AND PRIOR CANCELLED PARTS, MUST REMOVE EXISTING INSULATOR AS THE INSULATOR IS ALREADY PART OF THE NEW CARPET)	7–I4,11
97–02	Y07 (92I)	10433846	1	361.00	CARPET, R/CMPT FLR PNL (PEWTER) (WHEN REPLACING 99 AND PRIOR CANCELLED PARTS, MUST REMOVE EXISTING INSULATOR AS THE INSULATOR IS ALREADY PART OF THE NEW CARPET)	7–I4,11
97–99	Y07 (94I)	10433847	1	361.00	CARPET, R/CMPT FLR PNL (RED)	7–I4,11
98–02	Y07 (67I)	10433848	1	361.00	CARPET, R/CMPT FLR PNL (CAMEL) (WHEN REPLACING 99 AND PRIOR CANCELLED PARTS, MUST REMOVE EXISTING INSULATOR AS THE INSULATOR IS ALREADY PART OF THE NEW CARPET)	7 -I4,11
98–00	Y67 (92I)	10407008	1	361.00	CARPET, R/CMPT FLR PNL (PEWTER) (15.286)	7–I12,13
98–99	Y67 (94I)	10407009	1	361.00	CARPET, R/CMPT FLR PNL (RED) (15.286)	7–I12,13
98–00	Y67 (19I)	10433839	1	361.00	CARPET, R/CMPT FLR PNL (BLACK) (WHEN REPLACING 99 AND PRIOR CANCELLED PARTS, MUST REMOVE EXISTIONG INSULATOR AS THE INSULATOR IS ALREADY PART OF THE NEW CARPET)	7–I12,13
98–00	Y67 (67I)	10433842	1	361.00	CARPET, R/CMPT FLR PNL (CAMEL) (WHEN REPLACING 99 AND PRIOR CANCELLED PARTS, MUST REMOVE EXISTING INSULATOR AS THE INSULATOR IS ALREADY PART OF THE NEW CARPET)	7–I12,13
00–02	Y07 (70I)	10433849	1	361.00	CARPET, R/CMPT FLR PNL (RED) (WHEN REPLACING 99 AND PRIOR CANCELLED PARTS, MUST REMOVE EXISTING INSULATOR AS THE INSULATOR IS ALREADY PART OF THE NEW CARPET)	7–I20,11

cardiagn.com

15.222 BOLT – CARPET – COVER – INSULATOR – LATCH – NET – NUT – PANEL – PLATE – RETAINER – SEAL – STRIKER – TRIM, Rear Compartment Trim (Con't)

00	Y67 (70I)	10433843	1	361.00	CARPET, R/CMPT FLR PNL (RED) (WHEN REPLACING 99 AND PRIOR CANCELLED PARTS, MUST REMOVE EXISTING INSULATOR AS THE INSULATOR IS ALREADY PART OF THE NEW CARPET)	7–I12,13
97–99	Y07 (94I)	10275976	1	174.00	CARPET, R/END TR FIN PNL CTR (RED) (15.286)	7–I4,3
97–02	Y07 (19I)	10445783	1	174.00	CARPET, R/END TR FIN PNL CTR (BLACK)	7–I4,3
97–02	Y07 (92I)	10445784	1	168.67	CARPET, R/END TR FIN PNL CTR (PEWTER)	7–I4,3
98–02	Y07 (67I)	10445785	1	174.00	CARPET, R/END TR FIN PNL CTR (OAK)	7–I4,3
98–00	Y67 (92I)	10275979	1	174.00	CARPET, R/END TR FIN PNL CTR (PEWTER)	7–I12,2
98–99	Y67 (94I)	10275980	1	174.00	CARPET, R/END TR FIN PNL CTR (RED)	7–I12,2
98–00	Y67 (19I)	10413361	1	174.00	CARPET, R/END TR FIN PNL CTR (BLACK)	7–I12,2
98–00	Y67 (67I)	10413364	1	174.00	CARPET, R/END TR FIN PNL CTR (CAMEL)	7–I12,2
00–02	Y07 (70I)	10445786	1	174.00	CARPET, R/END TR FIN PNL CTR (RED)	7–I20,3
00	Y67 (70I)	10409430	1	174.00	CARPET, R/END TR FIN PNL CTR (RED)	7–I12,2
97–99	Y07 (94I)	10275955	LH	174.00	CARPET, R/END TR FIN PNL OTR (OUTER) (RED) (15.286)	7–I4,4
97–02	Y07 (92I)	10432588	RH	174.00	CARPET, R/END TR FIN PNL OTR (PEWTER)	7–I4,16
97–99	Y07 (94I)	10432592	RH	174.00	CARPET, R/END TR FIN PNL OTR (RED)	7–I4,16
97–02	Y07 (92I)	10435605	LH	168.67	CARPET, R/END TR FIN PNL OTR (PEWTER) (WHEN REPLACING 99 AND PRIOR CANCELLED PARTS, MUST REMOVE EXISTING INSULATOR AS THE INSULATOR IS ALREADY PART OF THE NEW CARPET)	7–I4,4
97–02	Y07 (19I)	10435606	LH	174.00	CARPET, R/END TR FIN PNL OTR (BLACK) (WHEN REPLACING 99 AND PRIOR CANCELLED PARTS, MUST REMOVE EXISTING INSULATOR AS THE INSULATOR IS ALREADY PART OF THE NEW CARPET)	7–I4,4
97–02	Y07 (19I)	10435612	RH	174.00	CARPET, R/END TR FIN PNL OTR (BLACK)	7–I4,16
98–02	Y07 (67I)	10435608	LH		CARPET, R/END TR FIN PNL OTR (CAMEL) (WHEN REPLACING 99 AND PRIOR CANCELLED PARTS, MUST REMOVE EXISTING INSULATOR AS THE INSULATOR IS ALREADY PART OF THE NEW CARPET)	7–I4,4
98–02	Y07 (67I)	10435614	RH	174.00	CARPET, R/END TR FIN PNL OTR (CAMEL)	7–I4,16

cardiagn.com

15.222 BOLT – CARPET – COVER – INSULATOR – LATCH – NET – NUT – PANEL – PLATE – RETAINER – SEAL – STRIKER – TRIM, Rear Compartment Trim (Con't)

98–00	Y67 (92I)	10275961	LH	174.00	CARPET, R/END TR FIN PNL OTR (PEWTER)	7–I12,5
98–00	Y67 (92I)	10275962	RH	174.00	CARPET, R/END TR FIN PNL OTR (PEWTER)	7–I12,1
98–99	Y67 (94I)	10275963	LH	174.00	CARPET, R/END TR FIN PNL OTR (RED)	7–I12,5
98–99	Y67 (94I)	10275964	RH	174.00	CARPET, R/END TR FIN PNL OTR (RED)	7–I12,1
98–00	Y67 (19I)	10409818	LH	174.00	CARPET, R/END TR FIN PNL OTR (BLACK) (15.286)	7–I12,5
98–00	Y67 (67I)	10409821	LH	174.00	CARPET, R/END TR FIN PNL OTR (CAMEL) (15.286)	7–I12,5
98–00	Y67 (19I)	10409822	RH	174.00	CARPET, R/END TR FIN PNL OTR (BLACK) (15.286)	7–I12,1
98–00	Y67 (67I)	10409825	RH	174.00	CARPET, R/END TR FIN PNL OTR (CAMEL) (15.286)	7–I12,1
00–02	Y07 (70I)	10435609	LH	174.00	CARPET, R/END TR FIN PNL OTR (RED)	7–I20,4
00–02	Y07 (70I)	10435615	RH	174.00	CARPET, R/END TR FIN PNL OTR (RED)	7–I20,16
00	Y67 (70I)	10409433	LH	174.00	CARPET, R/END TR FIN PNL OTR (RED)	7–I12,5
00	Y67 (70I)	10409434	RH	174.00	CARPET, R/END TR FIN PNL OTR (RED)	7–I12,1
97–98	Y (19I)	10413526	1	94.75	COVER, R/CMPT FLR PNL STOW PKT (BLACK) (CENTER)	7–I4,1
97–98	Y (92I)	10413527	1	94.75	COVER, R/CMPT FLR PNL STOW PKT (GRAY) (CENTER)	7–I4,1
97–98	Y (94I)	10413528	1	94.75	COVER, R/CMPT FLR PNL STOW PKT (RED) (CENTER)	7–I4,1
97–99	Y07 (94I)	10413532	LH	94.75	COVER, R/CMPT FLR PNL STOW PKT (RED)	7–I4,7
97–99	Y07 (94I)	10413536	RH	94.75	COVER, R/CMPT FLR PNL STOW PKT (RED)	7–I4,14
97–02	Y07 (19I)	10434927	LH	94.75	COVER, R/CMPT FLR PNL STOW PKT (BLACK)	7–I4,7
97–02	Y07 (92I)	10434928	LH	93.75	COVER, R/CMPT FLR PNL STOW PKT (GRAY)	7–I4,7
97–02	Y07 (19I)	10434933	RH	94.75	COVER, R/CMPT FLR PNL STOW PKT (BLACK)	7–I4,14
97–02	Y07 (92I)	10434934	RH	91.91	COVER, R/CMPT FLR PNL STOW PKT (PEWTER)	7–I4,14
98–02	Y07 (67I)	10434930	LH	93.75	COVER, R/CMPT FLR PNL STOW PKT (CAMEL)	7–I4,7
98–02	Y07 (67I)	10434936	RH	94.75	COVER, R/CMPT FLR PNL STOW PKT (CAMEL)	7–I4,14
98–00	Y07–67 (67I)	10413529	1	94.75	COVER, R/CMPT FLR PNL STOW PKT (CAMEL) (CENTER)	7–I4,1
98–99	Y67 (94I)	10402933	LH	94.75	COVER, R/CMPT FLR PNL STOW PKT (RED)	7–I12,9
98–00	Y67 (19I)	10413538	LH	94.75	COVER, R/CMPT FLR PNL STOW PKT (BLACK)	7–I12,9
98–00	Y67 (92I)	10413539	LH	94.75	COVER, R/CMPT FLR PNL STOW PKT (SHALE/PEWTER)	7–I12,9
98–00	Y67 (67I)	10413541	LH	94.75	COVER, R/CMPT FLR PNL STOW PKT (CAMEL)	7–I12,9
98–00	Y67 (19I)	10413542	RH	94.75	COVER, R/CMPT FLR PNL STOW PKT (BLACK)	7–I12,18

cardiagn.com

15.222 BOLT – CARPET – COVER – INSULATOR – LATCH – NET – NUT – PANEL – PLATE – RETAINER – SEAL – STRIKER – TRIM, Rear Compartment Trim (Con't)

98–00	Y67 (92I)	10413543	RH	94.75	COVER, R/CMPT FLR PNL STOW PKT (SHALE/PEWTER)	7–I12,18
98–99	Y67 (94I)	10413544	RH	94.75	COVER, R/CMPT FLR PNL STOW PKT (RED)	7–I12,18
98–00	Y67 (67I)	10413545	RH	94.75	COVER, R/CMPT FLR PNL STOW PKT (CAMEL)	7–I12,18
99–00	Y07–67 (19I)	10413526	1	94.75	COVER, R/CMPT FLR PNL STOW PKT (BLACK) (CENTER)	7–I4,1
99–00	Y07–67 (92I)	10413527	1	94.75	COVER, R/CMPT FLR PNL STOW PKT (GRAY) (CENTER)	7–I4,1
99	Y07–67 (94I)	10413528	1	94.75	COVER, R/CMPT FLR PNL STOW PKT (RED) (CENTER)	7–I4,1
99–00	Y37 (19I)	10413546	1	94.75	COVER, R/CMPT FLR PNL STOW PKT (BLACK) (CENTER)	7–I25,1
00–02	Y07 (70I)	10434926	LH	94.75	COVER, R/CMPT FLR PNL STOW PKT (RED)	7–I20,1
00–02	Y07 (70I)	10434932	RH	94.75	COVER, R/CMPT FLR PNL STOW PKT (RED)	7–I20,1
00	Y07–67 (70I)	10409413	1	94.75	COVER, R/CMPT FLR PNL STOW PKT (RED) (CENTER)	7–I12,3
00	Y67 (70I)	10409416	LH	94.75	COVER, R/CMPT FLR PNL STOW PKT (RED)	7–I12,9
00	Y67 (70I)	10409417	RH	94.75	COVER, R/CMPT FLR PNL STOW PKT (RED)	7–I12,18
01–02	Y07 (70I)	10409413	1	94.75	COVER, R/CMPT FLR PNL STOW PKT (RED) (CENTER)	7–I12,3
01–02	Y07 (19I)	10413526	1	94.75	COVER, R/CMPT FLR PNL STOW PKT (BLACK) (CENTER)	7–I4,1
01–02	Y07 (92I)	10413527	1	94.75	COVER, R/CMPT FLR PNL STOW PKT (GRAY) (CENTER)	7–I4,1
01–02	Y07 (67I)	10413529	1	94.75	COVER, R/CMPT FLR PNL STOW PKT (CAMEL) (CENTER)	7–I4,1
01–02	Y67 (19I)	10413546	1	94.75	COVER, R/CMPT FLR PNL STOW PKT (BLACK) (CENTER)	7–I25,1
01–02	Y67 (92I)	10439005	1	94.75	COVER, R/CMPT FLR PNL STOW PKT (CENTER) (PEWTER)	7–J7,3
01–02	Y67 (67I)	10439006	1	94.75	COVER, R/CMPT FLR PNL STOW PKT (CENTER) (OAK)	7–J7,3
01–02	Y67 (70I)	10439007	1	94.75	COVER, R/CMPT FLR PNL STOW PKT (CENTER)	
01–02	Y67 (19I)	10439014	LH	94.75	COVER, R/CMPT FLR PNL STOW PKT (BLACK)	7–J7,9
01–02	Y67 (92I)	10439015	LH	94.75	COVER, R/CMPT FLR PNL STOW PKT (PEWTER)	7–J7,9
01–02	Y67 (67I)	10439016	LH	94.75	COVER, R/CMPT FLR PNL STOW PKT (CAMEL)	7–J7,9
01–02	Y67 (70I)	10439017	LH	94.75	COVER, R/CMPT FLR PNL STOW PKT (RED)	7–J7,9
01–02	Y67 (19I)	10439031	RH	94.75	COVER, R/CMPT FLR PNL STOW PKT (BLACK)	7–J7,18
01–02	Y67 (92I)	10439032	RH	94.75	COVER, R/CMPT FLR PNL STOW PKT (PEWTER)	7–J7,18
01–02	Y67 (67I)	10439033	RH	94.75	COVER, R/CMPT FLR PNL STOW PKT (CAMEL)	7–J7,18
01–02	Y67 (70I)	10439034	RH	94.75	COVER, R/CMPT FLR PNL STOW PKT (RED)	7–J7,18

cardiagn.com

15.222 BOLT – CARPET – COVER – INSULATOR – LATCH – NET – NUT – PANEL – PLATE – RETAINER – SEAL – STRIKER – TRIM, Rear Compartment Trim (Con't)

97–02	Y07 (EXC EUROPEAN PROVISIONS (VD1) (EXPORT)	10401944	LH	10.00	INSULATOR, R/CMPT PNL FRM SI .	7–I4,18
97–02	Y07	10401945	RH	10.00	INSULATOR, R/CMPT PNL FRM SI .	7–I4,18
97–98	Y	10290666	2	13.35	LATCH, R/CMPT PNL STOW PKT CVR (12.977)	7–I25,2
99–00	Y37–67	10290666	2	13.35	LATCH, R/CMPT PNL STOW PKT CVR (12.977)	7–I25,2
01–02	Y67	10290666	2	13.35	LATCH, R/CMPT PNL STOW PKT CVR (12.977)	7–I25,2
98–02	Y67	10405356	1	41.75	NET, CONVENIENCE	7–I12,6
99–00	Y37 CONVENIENCE NET (AP9)	10405356	1	41.75	NET, CONVENIENCE	7–I12,6
97–02	Y07	10285966	2	*1.65	NUT, CONVENIENCE NET	7–I4,15
98–02	Y67	10285966	4	*1.65	NUT, CONVENIENCE NET	7–I4,15
99–02	Y37	10285966	4	*1.65	NUT, CONVENIENCE NET	7–I4,15
97–02	Y07	10407543	RH	38.00	PANEL, R/CMPT SI TR	7–G14,1
97–02	Y07	10407544	LH	38.00	PANEL, R/CMPT SI TR	7–G14,1
97–02	Y07	10404603	2	1.70	PLATE, CONVENIENCE NET LWR STUD (04.785)	7–I4,20
98–02	YY37–67	10404603	4	1.70	PLATE, CONVENIENCE NET STUD (04.785)	7–I4,20
99–02	Y37	10404603	4	1.70	PLATE, CONVENIENCE NET STUD (04.785)	7–I4,20
97–02	Y07	10404603	2	1.70	PLATE, CONVENIENCE NET UPR STUD (POSN #2) (04.785)	7–I4,20
98–02	Y67	16674629	6	*3.45	RETAINER, R/CMPT FRT TR (FASTNER–PUSH–IN FITS HOLE 6.35, OD–25.4, LEN–18, SGL HEAD)	
97–02	Y07	332364	RH	*.52	RETAINER, R/CMPT SI T/PNL (PUSH IN) (POSN #6) (08.154)	4–J13,10
97–02	Y07	10285935	2	*.53	RETAINER, R/CMPT SI T/PNL (PUSH IN) (WHITE) (4MM HOLE, 25.5MM LG) (MALE PUSH–IN) (14.630)	4–J13,41
97–02	Y07	20540336	RH	3.45	RETAINER, R/CMPT SI T/PNL (PUSH IN) (POSN #4) (PAINT TO MATCH) (FITS .18 HOLE, .7 LG, .43 OD, NYLON) (14.630)	4–J13,8
97–02	Y07	15748479	6	*.62	RETAINER, R/CMPT SI T/PNL RET (13.0MM WIDE) (YELLOW) (U–BASE) (16.575)	4–J13,40
97	Y07	10410732	6	3.45	RETAINER, R/END TR FIN PNL	7–I12,1
98–02	Y07	10410732	6	3.45	RETAINER, R/END TR FIN PNL	7–I12,1
98–00	Y67	10410732	6	3.45	RETAINER, R/END TR FIN PNL	7–I12,1
00–02	Y07	10435620	1		RETAINER, R/END TR FIN PNL	
98–02	YY37–67	10415038	4	3.45	SEAL, CONVENIENCE NET ANC PLT	6–D17,63
98–02	YY07	11515174	2	*1.75	SEAL, CONVENIENCE NET LWR STUD PLT (4 1/4"X7 1/2") (TRIM AS REQ'D) (15.492)	6–D8,57
98–02	Y07	10415038	2	3.45	SEAL, CONVENIENCE NET UPR STUD PLT	6–D17,63
97–00	Y	10290688	2	3.45	STRIKER, R/CMPT PNL STOW PKT CVR LAT (POSN #2)	6–F4,18

cardiagn.com

15.222 BOLT – CARPET – COVER – INSULATOR – LATCH – NET – NUT – PANEL – PLATE – RETAINER – SEAL – STRIKER – TRIM, Rear Compartment Trim (Con't)

97–98	Y	10401266	2	3.45	STRIKER, R/CMPT PNL STOW PKT CVR LAT (POSN #1)	6–E24,13
99–02	Y07–67	10401266	2	3.45	STRIKER, R/CMPT PNL STOW PKT CVR LAT (POSN #1)	6–E24,13
99	Y37	10402712	1	208.00	TRIM, R/CMPT FLR PNL	7–I25,6
00	Y37	10444221	1	208.00	TRIM, R/CMPT FLR PNL	7–I25,6
01–02	Y37	10422924	1	208.00	TRIM, R/CMPT FLR PNL	7–J2,3
01–02	Y67 (19I), (EXC CHASSIS, REALTIME DAMPING (F45)	10438995	1	208.00	TRIM, R/CMPT FLR PNL (BLACK)	7–J7,13
01–02	Y67 (92I), (EXC CHASSIS, REALTIME DAMPING (F45)	10438996	1	208.00	TRIM, R/CMPT FLR PNL (PEWTER)	7–J7,13
01–02	Y67 (67I), (EXC CHASSIS, REALTIME DAMPING (F45)	10438997	1	208.00	TRIM, R/CMPT FLR PNL (OAK)	7–J7,13
01–02	Y67 (70I), (EXC CHASSIS, REALTIME DAMPING (F45)	10438998	1	208.00	TRIM, R/CMPT FLR PNL (RED)	7–J7,13
01–02	Y67 CHASSIS, REALTIME DAMPING (F45), (19I)	10439000	1	208.00	TRIM, R/CMPT FLR PNL (BLACK)	7–J7,13
01–02	Y67 CHASSIS, REALTIME DAMPING (F45), (92I)	10439001	1	208.00	TRIM, R/CMPT FLR PNL (PEWTER)	7–J7,13
01–02	Y67 CHASSIS, REALTIME DAMPING (F45), (67I)	10439002	1	208.00	TRIM, R/CMPT FLR PNL (OAK)	7–J7,13
01–02	Y67 CHASSIS, REALTIME DAMPING (F45), (70I)	10439003	1	208.00	TRIM, R/CMPT FLR PNL (RED)	7–J7,13
97	Y (EXC CHASSIS, REALTIME DAMPING (F45), MULTIPLE CD PLYR (U1S)	10292411	1	208.00	TRIM, R/CMPT FLR PNL STOW PKT (GRAY)	7–I4,9
97	Y MULTIPLE CD PLYR (U1S), (EXC CHASSIS, REALTIME DAMPING (F45)	10292412	1	208.00	TRIM, R/CMPT FLR PNL STOW PKT (GRAY)	7–I4,9
97	Y07 CHASSIS, REALTIME DAMPING (F45), (EXC MULTIPLE CD PLYR (U1S)	10292413	1	208.00	TRIM, R/CMPT FLR PNL STOW PKT (GRAY)	7–I4,9
97	Y07 CHASSIS, REALTIME DAMPING (F45), MULTIPLE CD PLYR (U1S)	10292414	1	208.00	TRIM, R/CMPT FLR PNL STOW PKT (GRAY)	7–I4,9
98–00	Y07–67 (EXC CHASSIS, REALTIME DAMPING (F45), MULTIPLE CD PLYR (U1S)	10292411	1	208.00	TRIM, R/CMPT FLR PNL STOW PKT (GRAY)	7–I4,9
98–00	Y07–67 MULTIPLE CD PLYR (U1S), (EXC CHASSIS, REALTIME DAMPING (F45)	10292412	1	208.00	TRIM, R/CMPT FLR PNL STOW PKT (GRAY)	7–I4,9
98–00	Y07–67 CHASSIS, REALTIME DAMPING (F45), (EXC MULTIPLE CD PLYR (U1S)	10292413	1	208.00	TRIM, R/CMPT FLR PNL STOW PKT (GRAY)	7–I4,9
98–00	Y07–67 CHASSIS, REALTIME DAMPING (F45), MULTIPLE CD PLYR (U1S)	10292414	1	208.00	TRIM, R/CMPT FLR PNL STOW PKT (GRAY)	7–I4,9
01–02	Y07 (EXC CHASSIS, REALTIME DAMPING (F45), MULTIPLE CD PLYR (U1S)	10292411	1	208.00	TRIM, R/CMPT FLR PNL STOW PKT (GRAY)	7–I4,9
01–02	Y07 MULTIPLE CD PLYR (U1S), (EXC CHASSIS, REALTIME DAMPING (F45)	10292412	1	208.00	TRIM, R/CMPT FLR PNL STOW PKT (GRAY)	7–I4,9
01–02	Y07 CHASSIS, REALTIME DAMPING (F45), (EXC MULTIPLE CD PLYR (U1S)	10292413	1	208.00	TRIM, R/CMPT FLR PNL STOW PKT (GRAY)	7–I4,9

cardiagn.com

15.222 BOLT – CARPET – COVER – INSULATOR – LATCH – NET – NUT – PANEL – PLATE – RETAINER – SEAL – STRIKER – TRIM, Rear Compartment Trim (Con't)

01–02	Y07 CHASSIS, REALTIME DAMPING (F45), MULTIPLE CD PLYR (U1S)	10292414	1	208.00	TRIM, R/CMPT FLR PNL STOW PKT (GRAY)	7–I4,9
98–02	Y67	10427806	LH	6.70	TRIM, R/CMPT PNL FRM SUPT	7–D18,14
98–02	Y67	10427807	RH	6.70	TRIM, R/CMPT PNL FRM SUPT	7–D18,14
99–02	Y37	10427808	LH	6.70	TRIM, R/CMPT PNL FRM SUPT	7–I25,9
99–02	Y37	10427809	RH	6.70	TRIM, R/CMPT PNL FRM SUPT	7–I25,9
99–00	Y37	10299182	1	112.00	TRIM, R/CMPT RR PNL (BLACK)	7–I25,3
01–02	Y37	10434785	1	112.00	TRIM, R/CMPT RR PNL	7–J2,1
01–02	Y67 (19I)	10299182	1	112.00	TRIM, R/CMPT RR PNL (BLACK)	7–I25,3
01–02	Y67 (92I), (EXC MULTIPLE CD PLYR (U1S)	10439071	1	112.00	TRIM, R/CMPT RR PNL (PEWTER)	7–J7,2
01–02	Y67 (67I), (EXC MULTIPLE CD PLYR (U1S)	10439072	1	112.00	TRIM, R/CMPT RR PNL (OAK)	7–J7,2
01–02	Y67 (70I), (EXC MULTIPLE CD PLYR (U1S)	10439073	1	112.00	TRIM, R/CMPT RR PNL (RED)	7–J7,2
01–02	Y67 MULTIPLE CD PLYR (U1S), (92I)	10439143	1	112.00	TRIM, R/CMPT RR PNL (PEWTER)	7–J7,2
01–02	Y67 MULTIPLE CD PLYR (U1S), (67I)	10439144	1	112.00	TRIM, R/CMPT RR PNL (OAK)	7–J7,2
01–02	Y67 MULTIPLE CD PLYR (U1S), (70I)	10439145	1	112.00	TRIM, R/CMPT RR PNL (RED)	7–J7,2

15.286 CARPET, Front/Complete Floor

97–00	Y (19I)	10412799	LH	420.00	CARPET, F/FLR PNL (BLACK)	7–I8,13
97–98	Y (94I)	10412801	LH	420.00	CARPET, F/FLR PNL (RED)	7–I8,13
97–00	Y (19I)	10412806	RH	420.00	CARPET, F/FLR PNL (BLACK)	7–I8,8
97–98	Y (92I)	10412807	RH	420.00	CARPET, F/FLR PNL (SHALE/PEWTER)	7–I8,8
97–98	Y (94I)	10412808	RH	420.00	CARPET, F/FLR PNL (RED)	7–I8,8
97	Y07 (92I)	10412800	LH	420.00	CARPET, F/FLR PNL (SHALE/PEWTER)	7–I8,13
98	Y (67I)	10412802	LH	420.00	CARPET, F/FLR PNL (CAMEL)	7–I8,13
98	Y (67I)	10412809	RH	420.00	CARPET, F/FLR PNL (CAMEL)	7–I8,8
98–02	Y07–67 (92I)	10412800	LH	420.00	CARPET, F/FLR PNL (SHALE/PEWTER)	7–I8,13
99	Y07–67 (94I)	10412801	LH	420.00	CARPET, F/FLR PNL (RED)	7–I8,13
99–02	Y07–67 (67I)	10412802	LH	420.00	CARPET, F/FLR PNL (CAMEL)	7–I8,13
99–02	Y07–67 (92I)	10412807	RH	420.00	CARPET, F/FLR PNL (SHALE/PEWTER)	7–I8,8
99	Y07–67 (94I)	10412808	RH	420.00	CARPET, F/FLR PNL (RED)	7–I8,8
99–02	Y07–67 (67I)	10412809	RH	420.00	CARPET, F/FLR PNL (CAMEL)	7–I8,8
00–02	Y07–67 (70I)	10409419	RH	420.00	CARPET, F/FLR PNL (RED)	7–I8,8
00–02	Y07–67 (70I)	10409420	LH	420.00	CARPET, F/FLR PNL (RED)	7–I8,13
01–02	Y07–67 (19I)	10412799	LH	420.00	CARPET, F/FLR PNL (BLACK)	7–I8,13
01–02	Y07–67 (19I)	10412806	RH	420.00	CARPET, F/FLR PNL (BLACK)	7–I8,8
01–02	Y37 (19I) (70I)	10412799	LH	420.00	CARPET, F/FLR PNL (BLACK)	7–I8,13
01–02	Y37 (19I), (70I)	10412806	RH	420.00	CARPET, F/FLR PNL (BLACK)	7–I8,8
97–00	Y (19I)	10290668	1	150.00	CARPET, FLR K/UP PNL (BLACK)	7–I8,1
97	Y07 (92I)	10290669	1	159.00	CARPET, FLR K/UP PNL (PEWTER)	7–I8,1
97	Y07 (94I)	10290670	1	159.00	CARPET, FLR K/UP PNL (RED)	7–I8,1
98–00	Y07–67 (92I)	10290669	1	159.00	CARPET, FLR K/UP PNL (PEWTER)	7–I8,1
98–99	Y07–67 (94I)	10290670	1	159.00	CARPET, FLR K/UP PNL (RED)	7–I8,1
98–00	Y07–67 (67I)	10290671	1	159.00	CARPET, FLR K/UP PNL (OAK)	7–I8,1
00	Y07–67 (70I)	10409421	1	159.00	CARPET, FLR K/UP PNL (RED)	7–I8,1

cardiagn.com

15.286 CARPET, Front/Complete Floor (Con't)

01	Y07–67 (19I)	10290668	1	159.00	CARPET, FLR K/UP PNL (BLACK)	7–18,1
01	Y07–67 (92I)	10290669	1	159.00	CARPET, FLR K/UP PNL (PEWTER)	7–18,1
01	Y07–67 (67I)	10290671	1	159.00	CARPET, FLR K/UP PNL (OAK) ..	7–18,1
01	Y07–67 (70I)	10409421	1	159.00	CARPET, FLR K/UP PNL (RED) ..	7–18,1
01	Y37 (19I), (70I)	10290668	1	159.00	CARPET, FLR K/UP PNL (BLACK)	7–18,1
02	Y07–67 (19I)	10314495	1	159.00	CARPET, FLR K/UP PNL (BLACK)	7–18,1
02	Y07–67 (92I)	10314496	1	159.00	CARPET, FLR K/UP PNL	7–18,1
02	Y07–67 (67I)	10314497	1	159.00	CARPET, FLR K/UP PNL (OAK) ..	7–18,1
02	Y07–67 (70I)	10314498	1	159.00	CARPET, FLR K/UP PNL (RED) ..	7–18,1
02	Y37 (19I), (70I)	10314495	1	159.00	CARPET, FLR K/UP PNL (BLACK)	7–18,1

15.300 HOOK, Front Floor Carpet

97–02	Y	10275204	RH	3.45	HOOK, F/FLR CPT	7–18,6

cardiagn.com

21.360A MAT PKG, Front Floor Mat (Carpet) (Production)

97–00	Y (19I)	12371230	1	47.00	MAT PKG, F/FLR AUX (TWIN–CPT) (BLACK) (NO LOGO) (15.286)
97	Y07 (92I)	12371231	1	47.00	MAT PKG, F/FLR AUX (TWIN–CPT) (PEWTER) (15.286)
97	Y07 (94I)	12371232	1	47.00	MAT PKG, F/FLR AUX (TWIN–CPT) (RED) (15.286)
98–02	Y07–67 (92I)	12371231	1	47.00	MAT PKG, F/FLR AUX (TWIN–CPT) (PEWTER) (15.286)
98–99	Y07–67 (94I)	12371232	1	47.00	MAT PKG, F/FLR AUX (TWIN–CPT) (RED) (15.286)
98–02	Y07–67 (67I)	12371306	1	38.00	MAT PKG, F/FLR AUX (TWIN–CPT) (CAMEL) (15.286)
00–02	Y07–67 (70I)	12496169	1	38.00	MAT PKG, F/FLR AUX (TWIN–CPT) (RED) (15.286)
01–02	Y07–67 (19I)	12371230	1	47.00	MAT PKG, F/FLR AUX (TWIN–CPT) (BLACK) (NO LOGO) (15.286)
01–02	Y37 (19I), (70I)	12371230	1	47.00	MAT PKG, F/FLR AUX (TWIN–CPT) (BLACK) (NO LOGO) (15.286)

2.480 HARNESS – WIRE, Chassis Wiring

97–02	Y 4–SPD A/TRANS (M30)	15320476	1	82.75	HARNESS, A/TRNS WRG (INCLS TCC SOL VLV) (AC–DELCO #15320476)
97–98	Y	12130416	1	131.58	HARNESS, F/PMP WRG
99	Y	12189531	1	131.58	HARNESS, F/PMP WRG
00–02	Y	12189905	1		HARNESS, F/PMP WRG (HARN TO JMPR)
00–02	Y	12189906	1		HARNESS, F/PMP WRG (HARN JMPR TO FUEL TK)
97	Y FRT FOG LP (T96), (EXC SIG & MKR LP (T90) (EXPORT)	12189881	1	301.92	HARNESS, FWD LP WRG
97	Y (EXC FRT FOG LP (T96)	12189863	1	944.44	HARNESS, FWD LP WRG
98	Y FRT FOG LP (T96), (EXC FRT ABS BRAKE LOC (JAG), SIG & MKR LP (T90) (EXPORT)	12163322	1	301.92	HARNESS, FWD LP WRG
98	Y (EXC FRT ABS BRAKE LOC (JAG), FRT FOG LP (T96)	12163324	1	301.92	HARNESS FWD LP WRG
98	Y FRT ABS BRAKE LOC (JAG), FRT FOG LP (T96), (EXC ACTIVE BRAKE CTL (JL4), SIG & MKR LP (T90) (EXPORT)	12189515	1	301.92	HARNESS, FWD LP WRG
98	Y FRT ABS BRAKE LOC (JAG), (EXC ACTIVE BRAKE CTL (JL4), FRT FOG LP (T96)	12189517	1	301.92	HARNESS, FWD LP WRG
98	Y FRT ABS BRAKE LOC (JAG), ACTIVE BRAKE CTL (JL4), FRT FOG LP (T96), (EXC SIG & MKR LP (T90) (EXPORT)	12189518	1	364.74	HARNESS, FWD LP WRG
98	Y FRT ABS BRAKE LOC (JAG), ACTIVE BRAKE CTL (JL4), (EXC FRT FOG LP (T96)	12189520	1	666.86	HARNESS, FWD LP WRG
99	Y ACTIVE BRAKE CTL (JL4), FRT FOG LP (T96), (EXC SIG & MKR LP (T90) (EXPORT)	12189976	1	290.29	HARNESS, FWD LP WRG
99	Y07–67 FRT FOG LP (T96), (EXC ACTIVE BRAKE CTL (JL4), SIG & MKR LP (T90) (EXPORT)	12189973	1	301.92	HARNESS, FWD LP WRG
99	Y07–67 (EXC ACTIVE BRAKE CTL (JL4), SIG & MKR LP (T90) (EXPORT), FRT FOG LP (T96)	12189974	1	301.92	HARNESS, FWD LP WRG

cardiagn.com

2.480 HARNESS – WIRE, Chassis Wiring(Con't)

99	Y07–67 ACTIVE BRAKE CTL (JL4), (EXC SIG & MKR LP (T90) (EXPORT), FRT FOG LP (T96)	12189978	1	300.90	HARNESS, FWD LP WRG .....
99	Y37 FRT FOG LP (T96), (EXC ACTIVE BRAKE CTL (JL4)	12189973	1	301.92	HARNESS, FWD LP WRG .....
99	Y37 P/S (VARIABLE) (NV7), (EXC ACTIVE BRAKE CTL (JL4), FRT FOG LP (T96)	12189974	1	301.92	HARNESS, FWD LP WRG .....
00	Y ACTIVE BRAKE CTL (JL4), (EXC SIG & MKR LP (T90) (EXPORT) ...	15329406	1	290.29	HARNESS, FWD LP WRG .....
00	YC7–67 (EXC ACTIVE BRAKE CTL (JL4), SIG & MKR LP (T90) (EXPORT)	15329403	1	301.92	HARNESS, FWD LP WRG .....
00	Y37 (EXC ACTIVE BRAKE CTL (JL4)	15329403	1	301.92	HARNESS, FWD LP WRG .....
01	YY07–67 ACTIVE BRAKE CTL (JL4), (EXC SIG & MKR LP (T90) (EXPORT), (2ND DES)	10310796	1	296.53	HARNESS, FWD LP WRG (2ND DSN USED ON/AFTER VIN #15107689, (1ST DSN 10448116)) .....
01	YY07–67 ACTIVE BRAKE CTL (JL4), SIG & MKR LP (T90) (EXPORT), (2ND DES)	10310798	1	300.90	HARNESS, FWD LP WRG (2ND DSN USED ON/AFTER VIN #15107689, (1ST DSN 10448118)) .....
01	YY07–67 ACTIVE BRAKE CTL (JL4), (EXC SIG & MKR LP (T90) (EXPORT), (1ST DES)	10448116	1	296.53	HARNESS, FWD LP WRG (1ST DSN USED B/4 VIN #15107689, (2ND DSN 10310796)) .....
01	YY07–67 ACTIVE BRAKE CTL (JL4), SIG & MKR LP (T90) (EXPORT), (1ST DES)	10448118	1	300.90	HARNESS, FWD LP WRG (1ST DSN USED B/4 VIN #15107689, (2ND DSN 10310798)) .....
01–02	YY37	10310796	1	296.53	HARNESS, FWD LP WRG .....
01	YY37	10448116	1	296.53	HARNESS, FWD LP WRG .....
02	YY07–67 (EXC SIG & MKR LP (T90) (EXPORT)	10310796	1	296.53	HARNESS, FWD LP WRG .....
97–99	Y (EXC SIG & MKR LP (T90) (EXPORT)	12163711	1	40.09	HARNESS, FWD LP WRG HARN EXTN
00–02	Y (EXC SIG & MKR LP (T90) (EXPORT)	15329462	1	40.09	HARNESS, FWD LP WRG HARN EXTN .
97–02	Y	12163776	1	80.84	HARNESS, HAZARD LP & T/SIG LP FLSHR WRG .....
97	Y 4–SPD A/TRANS (M30), A/C FRT AUTO/AUX CONT (CJ2), (EXC TAIL & S/LP (T89) (EXPORT), CANADIAN (Z49)	12189868	1	1548.75	HARNESS, I/P WRG ....
97	Y 4–SPD A/TRANS (M30), A/C MAN CONT (C60), (EXC TAIL & S/LP (T89) (EXPORT), CANADIAN (Z49)	12189869	1	1257.59	HARNESS, I/P WRG .....
97	Y 6–SPD M/TRANS (MM6), A/C FRT AUTO/AUX CONT (CJ2), (EXC TAIL & S/LP (T89) (EXPORT), CANADIAN (Z49)	12189870	1	1257.59	HARNESS, I/P WRG .....
97	Y 6–SPD M/TRANS (MM6), A/C MAN CONT (C60), (EXC TAIL & S/LP (T89) (EXPORT), CANADIAN (Z49)	12189871	1	1257.59	HARNESS, I/P WRG .....
97	Y 4–SPD A/TRANS (M30), A/C FRT AUTO/AUX CONT (CJ2), CANADIAN (Z49), (EXC TAIL & S/LP (T89) (EXPORT), SPECIAL TAIL & S/LP (T93)	12189874	1	1257 59	HARNESS, I/P WRG ....
97	Y 4–SPD A/TRANS (M30), A/C MAN CONT (C60), CANADIAN (Z49), (EXC TAIL & S/LP (T89) (EXPORT), SPECIAL TAIL & S/LP (T93)	12189875	1	1257.59	HARNESS, I/P WRG .....

cardiagn.com

2.480 HARNESS – WIRE, Chassis Wiring(Con't)

97	Y 6–SPD M/TRANS (MM6), A/C FRT AUTO/AUX CONT (CJ2), CANADIAN (Z49), (EXC TAIL & S/LP (T89) (EXPORT), SPECIAL TAIL & S/LP (T93)	12189876	1	1257.59	HARNESS, I/P WRG
97	Y 6–SPD M/TRANS (MM6), A/C MAN CONT (C60), CANADIAN (Z49), (EXC TAIL & S/LP (T89) (EXPORT), SPECIAL TAIL & S/LP (T93)	12189877	1	1257.59	HARNESS, I/P WRG
98	Y 6–SPD M/TRANS (MM6), A/C MAN CONT (C60), (EXC FRT ABS BRAKE LOC (JAG), TAIL & S/LP (T89) (EXPORT), CANADIAN (Z49)	12189816	1	1257.59	HARNESS, I/P WRG
98	Y07 4–SPD A/TRANS (M30), A/C FRT AUTO/AUX CONT (CJ2), (EXC FRT ABS BRAKE LOC (JAG), TAIL & S/LP (T89) (EXPORT), CANADIAN (Z49)	12189813	1	1257.59	HARNESS, I/P WRG
98	Y07 4–SPD A/TRANS (M30), A/C MAN CONT (C60), (EXC FRT ABS BRAKE LOC (JAG), TAIL & S/LP (T89) (EXPORT), CANADIAN (Z49)	12189814	1	1467.60	HARNESS, I/P WRG
98	Y07 6–SPD M/TRANS (MM6), A/C FRT AUTO/AUX CONT (CJ2), (EXC FRT ABS BRAKE LOC (JAG), TAIL & S/LP (T89) (EXPORT), CANADIAN (Z49)	12189815	1	1595.21	HARNESS, I/P WRG
98	Y07 4–SPD A/TRANS (M30), A/C FRT AUTO/AUX CONT (CJ2), CANADIAN (Z49), (EXC FRT ABS BRAKE LOC (JAG), TAIL & S/LP (T89) (EXPORT), SPECIAL TAIL & S/LP (T93)	12189819	1	1257.59	HARNESS, I/P WRG
98	Y07 4–SPD A/TRANS (M30), A/C MAN CONT (C60), CANADIAN (Z49), (EXC FRT ABS BRAKE LOC (JAG), TAIL & S/LP (T89) (EXPORT), SPECIAL TAIL & S/LP (T93)	12189820	1	1257.59	HARNESS, I/P WRG
98	Y07 6–SPD M/TRANS (MM6), A/C FRT AUTO/AUX CONT (CJ2), CANADIAN (Z49), (EXC FRT ABS BRAKE LOC (JAG), TAIL & S/LP (T89) (EXPORT), SPECIAL TAIL & S/LP (T93)	12189821	1	1257.59	HARNESS, I/P WRG
98	Y07 6–SPD M/TRANS (MM6), A/C MAN CONT (C60), CANADIAN (Z49), (EXC FRT ABS BRAKE LOC (JAG), TAIL & S/LP (T89) (EXPORT), SPECIAL TAIL & S/LP (T93)	12189822	1	1257.59	HARNESS, I/P WRG
98	Y07 4–SPD A/TRANS (M30), A/C FRT AUTO/AUX CONT (CJ2), ACTIVE BRAKE CTL (JL4), FRT ABS BRAKE LOC (JAG), (EXC TAIL & S/LP (T89) (EXPORT), CANADIAN (Z49)	12190400	1	1233.23	HARNESS, I/P WRG (MUST BE USED W/BODY CONT MDL LABELED 9359821 FOR 1998)

cardiagn.com

2.480 HARNESS – WIRE, Chassis Wiring(Con't)

98	Y07 4–SPD A/TRANS (M30), A/C MAN CONT (C60), ACTIVE BRAKE CTL (JL4), FRT ABS BRAKE LOC (JAG), (EXC TAIL & S/LP (T89) (EXPORT), CANADIAN (Z49)	12190401	1	1233.23	HARNESS, I/P WRG (MUST BE USED W/BODY CONT MDL LABELED 9359821 FOR 1998) .....
98	Y07 6–SPD M/TRANS (MM6), A/C FRT AUTO/AUX CONT (CJ2), ACTIVE BRAKE CTL (JL4), FRT ABS BRAKE LOC (JAG), (EXC TAIL & S/LP (T89) (EXPORT), CANADIAN (Z49)	12190402	1	1233.23	HARNESS, I/P WRG (MUST BE USED W/BODY CONT MDL LABELED 9359821 FOR 1998) .....
98	Y07 6–SPD M/TRANS (MM6), A/C MAN CONT (C60), ACTIVE BRAKE CTL (JL4), FRT ABS BRAKE LOC (JAG), (EXC TAIL & S/LP (T89) (EXPORT), CANADIAN (Z49)	12190403	1	1233.23	HARNESS, I/P WRG (MUST BE USED W/BODY CONT MDL LABELED 9359821 FOR 1998) .....
98	Y07 4–SPD A/TRANS (M30), A/C FRT AUTO/AUX CONT (CJ2), FRT ABS BRAKE LOC (JAG), ACTIVE BRAKE CTL (JL4), CANADIAN (Z49), (EXC TAIL & S/LP (T89) (EXPORT), SPECIAL TAIL & S/LP (T93)	12190406	1	1233.23	HARNESS, I/P WRG (MUST BE USED W/BODY CONT MDL LABELED 9359821 FOR 1998) .....
98	Y07 4–SPD A/TRANS (M30), A/C MAN CONT (C60), FRT ABS BRAKE LOC (JAG), ACTIVE BRAKE CTL (JL4), CANADIAN (Z49), (EXC TAIL & S/LP (T89) (EXPORT), SPECIAL TAIL & S/LP (T93)	12190407	1	1233.23	HARNESS, I/P WRG (MUST BE USED W/BODY CONT MDL LABELED 9359821 FOR 1998) .....
98	Y07 6–SPD M/TRANS (MM6), A/C FRT AUTO/AUX CONT (CJ2), FRT ABS BRAKE LOC (JAG), ACTIVE BRAKE CTL (JL4), CANADIAN (Z49), (EXC TAIL & S/LP (T89) (EXPORT), SPECIAL TAIL & S/LP (T93)	12190408	1	1233.23	HARNESS, I/P WRG (MUST BE USED W/BODY CONT MDL LABELED 9359821 FOR 1998) .....
98	Y07 6–SPD M/TRANS (MM6), A/C MAN CONT (C60), FRT ABS BRAKE LOC (JAG), ACTIVE BRAKE CTL (JL4), CANADIAN (Z49), (EXC TAIL & S/LP (T89) (EXPORT), SPECIAL TAIL & S/LP (T93)	12190409	1	1233.23	HARNESS, I/P WRG (MUST BE USED W/BODY CONT MDL LABELED 9359821 FOR 1998) .....
98	Y07 4–SPD A/TRANS (M30), A/C FRT AUTO/AUX CONT (CJ2), FRT ABS BRAKE LOC (JAG), (EXC ACTIVE BRAKE CTL (JL4), TAIL & S/LP (T89) (EXPORT), CANADIAN (Z49)	12190412	1	1233.23	HARNESS, I/P WRG (MUST BE USED W/BODY CONT MDL LABELED 9359821 FOR 1998) .....
98	Y07 4–SPD A/TRANS (M30), A/C MAN CONT (C60), FRT ABS BRAKE LOC (JAG), (EXC ACTIVE BRAKE CTL (JL4), TAIL & S/LP (T89) (EXPORT), CANADIAN (Z49)	12190413	1	1233.23	HARNESS, I/P WRG (MUST BE USED W/BODY CONT MDL LABELED 9359821 FOR 1998) .....
98	Y07 6–SPD M/TRANS (MM6), A/C FRT AUTO/AUX CONT (CJ2), FRT ABS BRAKE LOC (JAG) (EXC ACTIVE BRAKE CTL (JL4), TAIL & S/LP (T89) (EXPORT), CANADIAN (Z49)	12190414	1	1233.23	HARNESS, I/P WRG (MUST BE USED W/BODY CONT MDL LABELED 9359821 FOR 1998) .....

cardiagn.com

2.480 HARNESS – WIRE, Chassis Wiring(Con't)

98	Y07 6–SPD M/TRANS (MM6), A/C MAN CONT (C60), FRT ABS BRAKE LOC (JAG), (EXC ACTIVE BRAKE CTL (JL4), TAIL & S/LP (T89) (EXPORT), CANADIAN (Z49)	12190415	1	1233.23	HARNESS, I/P WRG (MUST BE USED W/BODY CONT MDL LABELED 9359821 FOR 1998) .....
98	Y07 4–SPD A/TRANS (M30), A/C FRT AUTO/AUX CONT (CJ2), FRT ABS BRAKE LOC (JAG), CANADIAN (Z49), (EXC ACTIVE BRAKE CTL (JL4), TAIL & S/LP (T89) (EXPORT), SPECIAL TAIL & S/LP (T93)	12190418	1	1233.23	HARNESS, I/P WRG (MUST BE USED W/BODY CONT MDL LABELED 9359821 FOR 1998) .....
98	Y07 4–SPD A/TRANS (M30), A/C MAN CONT (C60), FRT ABS BRAKE LOC (JAG), CANADIAN (Z49), (EXC ACTIVE BRAKE CTL (JL4), TAIL & S/LP (T89) (EXPORT), SPECIAL TAIL & S/LP (T93)	12190419	1	1233.23	HARNESS, I/P WRG (MUST BE USED W/BODY CONT MDL LABELED 9359821 FOR 1998) .....
98	Y07 6–SPD M/TRANS (MM6), A/C FRT AUTO/AUX CONT (CJ2), FRT ABS BRAKE LOC (JAG), CANADIAN (Z49), (EXC ACTIVE BRAKE CTL (JL4), TAIL & S/LP (T89) (EXPORT), SPECIAL TAIL & S/LP (T93)	12190420	1	1233.23	HARNESS, I/P WRG (MUST BE USED W/BODY CONT MDL LABELED 9359821 FOR 1998) .....
98	Y07 6–SPD M/TRANS (MM6), A/C MAN CONT (C60), FRT ABS BRAKE LOC (JAG), CANADIAN (Z49), (EXC ACTIVE BRAKE CTL (JL4), TAIL & S/LP (T89) (EXPORT), SPECIAL TAIL & S/LP (T93)	12190421	1	1233.23	HARNESS, I/P WRG (MUST BE USED W/BODY CONT MDL LABELED 9359821 FOR 1998) .....
98	Y67 4–SPD A/TRANS (M30), A/C FRT AUTO/AUX CONT (CJ2), (EXC FRT ABS BRAKE LOC (JAG), TAIL & S/LP (T89) (EXPORT), CANADIAN (Z49)	12189801	1	1257.59	HARNESS, I/P WRG .....
98	Y67 6–SPD M/TRANS (MM6), A/C FRT AUTO/AUX CONT (CJ2), (EXC FRT ABS BRAKE LOC (JAG), TAIL & S/LP (T89) (EXPORT), CANADIAN (Z49)	12189802	1	1257.59	HARNESS, I/P WRG .....
98	Y67 4–SPD A/TRANS (M30), A/C MAN CONT (C60), (EXC FRT ABS BRAKE LOC (JAG), TAIL & S/LP (T89) (EXPORT), CANADIAN (Z49)	12189803	1	1257.59	HARNESS, I/P WRG .....
98	Y67 6–SPD M/TRANS (MM6), A/C MAN CONT (C60), (EXC FRT ABS BRAKE LOC (JAG), TAIL & S/LP (T89) (EXPORT), CANADIAN (Z49)	12189804	1	1257.59	HARNESS, I/P WRG .....
98	Y67 4–SPD A/TRANS (M30), A/C FRT AUTO/AUX CONT (CJ2), CANADIAN (Z49), (EXC FRT ABS BRAKE LOC (JAG), TAIL & S/LP (T89) (EXPORT), SPECIAL TAIL & S/LP (T93)	12189805	1	1257.59	HARNESS, I/P WRG .....
98	Y67 4–SPD A/TRANS (M30), A/C MAN CONT (C60), CANADIAN (Z49), (EXC FRT ABS BRAKE LOC (JAG), TAIL & S/LP (T89) (EXPORT), SPECIAL TAIL & S/LP (T93)	12189806	1	1257.59	HARNESS, I/P WRG .....

cardiagn.com

2.480 HARNESS – WIRE, Chassis Wiring(Con't)

98	Y67 6–SPD M/TRANS (MM6), A/C FRT AUTO/AUX CONT (CJ2), CANADIAN (Z49), (EXC FRT ABS BRAKE LOC (JAG), TAIL & S/LP (T89) (EXPORT), SPECIAL TAIL & S/LP (T93)	12189807	1	1257.59	HARNESS, I/P WRG
98	Y67 6–SPD M/TRANS (MM6), A/C MAN CONT (C60), CANADIAN (Z49), (EXC FRT ABS BRAKE LOC (JAG), TAIL & S/LP (T89) (EXPORT), SPECIAL TAIL & S/LP (T93)	12189808	1	1257.59	HARNESS, I/P WRG
98	Y67 4–SPD A/TRANS (M30), A/C FRT AUTO/AUX CONT (CJ2), FRT ABS BRAKE LOC (JAG), (EXC TAIL & S/LP (T89) (EXPORT), CANADIAN (Z49)	12189980	1	1233.23	HARNESS, I/P WRG (MUST BE USED W/BODY CONT MDL LABELED 9359821 FOR 1998)
98	Y67 6–SPD M/TRANS (MM6), A/C FRT AUTO/AUX CONT (CJ2), FRT ABS BRAKE LOC (JAG), (EXC TAIL & S/LP (T89) (EXPORT), CANADIAN (Z49)	12189981	1	1233.23	HARNESS, I/P WRG (MUST BE USED W/BODY CONT MDL LABELED 9359821 FOR 1998)
98	Y67 4–SPD A/TRANS (M30), A/C MAN CONT (C60), FRT ABS BRAKE LOC (JAG), (EXC TAIL & S/LP (T89) (EXPORT), CANADIAN (Z49)	12189982	1	1233.23	HARNESS, I/P WRG (MUST BE USED W/BODY CONT MDL LABELED 9359821 FOR 1998)
98	Y67 6–SPD M/TRANS (MM6), A/C MAN CONT (C60), FRT ABS BRAKE LOC (JAG), (EXC TAIL & S/LP (T89) (EXPORT), CANADIAN (Z49)	12189983	1	1233.23	HARNESS, I/P WRG (MUST BE USED W/BODY CONT MDL LABELED 9359821 FOR 1998)
98	Y67 4–SPD A/TRANS (M30), A/C FRT AUTO/AUX CONT (CJ2), CANADIAN (Z49), FRT ABS BRAKE LOC (JAG), (EXC TAIL & S/LP (T89) (EXPORT)	12189984	1	1233.23	HARNESS, I/P WRG (MUST BE USED W/BODY CONT MDL LABELED 9359821 FOR 1998)
98	Y67 4–SPD A/TRANS (M30), A/C MAN CONT (C60), CANADIAN (Z49), FRT ABS BRAKE LOC (JAG), (EXC TAIL & S/LP (T89) (EXPORT)	12189985	1	1233.23	HARNESS, I/P WRG (MUST BE USED W/BODY CONT MDL LABELED 9359821 FOR 1998)
98	Y67 6–SPD M/TRANS (MM6), A/C FRT AUTO/AUX CONT (CJ2), FRT ABS BRAKE LOC (JAG), CANADIAN (Z49), (EXC TAIL & S/LP (T89) (EXPORT)	12189986	1	1233.23	HARNESS, I/P WRG (MUST BE USED W/BODY CONT MDL LABELED 9359821 FOR 1998)
98	Y67 6–SPD M/TRANS (MM6), A/C MAN CONT (C60), CANADIAN (Z49), FRT ABS BRAKE LOC (JAG), (EXC TAIL & S/LP (T89) (EXPORT)	12189987	1	1233.23	HARNESS, I/P WRG (MUST BE USED W/BODY CONT MDL LABELED 9359821 FOR 1998)
99	Y07 4–SPD A/TRANS (M30), A/C FRT AUTO/AUX CONT (CJ2), ACTIVE BRAKE CTL (JL4), (EXC T&T WHL (N37), TAIL & S/LP (T89) (EXPORT)	12190424	1	1233.23	HARNESS, I/P WRG (MAY REQUIRE 12450028 I/P COMPT LP & 12102616 PWR RCPT CONN)
99–00	Y07 4–SPD A/TRANS (M30), A/C FRT AUTO/AUX CONT (CJ2), ACTIVE BRAKE CTL (JL4), T&T WHL (N37), (EXC TAIL & S/LP (T89) (EXPORT)	12190424	1	1233.23	HARNESS, I/P WRG (MAY REQUIRE 12450028 I/P COMPT LP & 12102616 PWR RCPT CONN)

cardiagn.com

2.480 HARNESS – WIRE, Chassis Wiring(Con't)

99–00	Y07 4–SPD A/TRANS (M30), A/C MAN CONT (C60), ACTIVE BRAKE CTL (JL4), (EXC T&T WHL (N37), TAIL & S/LP (T89) (EXPORT)	12190427	1	1233.23	HARNESS, I/P WRG (MAY REQUIRE 12450028 I/P COMPT LP & 12102616 PWR RCPT CONN) .....
99	Y07 6–SPD M/TRANS (MM6), A/C FRT AUTO/AUX CONT (CJ2), ACTIVE BRAKE CTL (JL4), T&T WHL (N37), (EXC TAIL & S/LP (T89) (EXPORT)	12190429	1	1233.23	HARNESS, I/P WRG (MAY REQUIRE 12450028 I/P COMPT LP & 12102616 PWR RCPT CONN) .....
99–00	Y07 6–SPD M/TRANS (MM6), A/C MAN CONT (C60), ACTIVE BRAKE CTL (JL4), (EXC T&T WHL (N37), TAIL & S/LP (T89) (EXPORT)	12190432	1	1233.23	HARNESS, I/P WRG (MAY REQUIRE 12450028 I/P COMPT LP & 12102616 PWR RCPT CONN) .....
99–00	Y07 4–SPD A/TRANS (M30), A/C FRT AUTO/AUX CONT (CJ2), T&T WHL (N37), (EXC ACTIVE BRAKE CTL (JL4), TAIL & S/LP (T89) (EXPORT)	12190434	1	1233.23	HARNESS, I/P WRG (MAY REQUIRE 12450028 I/P COMPT LP & 12102616 PWR RCPT CONN) .....
99–00	Y07 4–SPD A/TRANS (M30), A/C MAN CONT (C60), (EXC ACTIVE BRAKE CTL (JL4), T&T WHL (N37), TAIL & S/LP (T89) (EXPORT)	12190437	1	1233.23	HARNESS, I/P WRG (MAY REQUIRE 12450028 I/P COMPT LP & 12102616 PWR RCPT CONN) .....
99–00	Y07 6–SPD M/TRANS (MM6), A/C FRT AUTO/AUX CONT (CJ2), T&T WHL (N37), (EXC ACTIVE BRAKE CTL (JL4), TAIL & S/LP (T89) (EXPORT)	12190439	1	1233.23	HARNESS, I/P WRG (MAY REQUIRE 12450028 I/P COMPT LP & 12102616 PWR RCPT CONN) .....
99–00	Y07 6–SPD M/TRANS (MM6), A/C MAN CONT (C60), (EXC ACTIVE BRAKE CTL (JL4), T&T WHL (N37), TAIL & S/LP (T89) (EXPORT)	12190442	1	1233.23	HARNESS, I/P WRG (MAY REQUIRE 12450028 I/P COMPT LP & 12102616 PWR RCPT CONN) .....
99–00	Y37 4–SPD A/TRANS (M30), 4 SPKR SYS (UQ5), (EXC ACTIVE BRAKE CTL (JL4)	15329320	1	1233.23	HARNESS, I/P WRG (MAY REQUIRE 12450028 I/P COMPT LP & 12102616 PWR RCPT CONN) .....
99–00	Y37 4–SPD A/TRANS (M30), SPEAKER SYSTEM 6 (UZ6), (EXC ACTIVE BRAKE CTL (JL4)	15329321	1	1233.23	HARNESS, I/P WRG (MAY REQUIRE 12450028 I/P COMPT LP & 12102616 PWR RCPT CONN) .....
99–00	Y37 6–SPD M/TRANS (MM6), 4 SPKR SYS (UQ5), (EXC ACTIVE BRAKE CTL (JL4)	15329322	1	1233.23	HARNESS, I/P WRG (MAY REQUIRE 12450028 I/P COMPT LP & 12102616 PWR RCPT CONN) .....
99–00	Y37 6–SPD M/TRANS (MM6), SPEAKER SYSTEM 6 (UZ6), (EXC ACTIVE BRAKE CTL (JL4)	15329323	1	1233.23	HARNESS, I/P WRG (MAY REQUIRE 12450028 I/P COMPT LP & 12102616 PWR RCPT CONN) .....
99	Y37 6–SPD M/TRANS (MM6), A/C MAN CONT (C60), ACTIVE BRAKE CTL (JL4), 4 SPKR SYS (UQ5)	15329332	1	1208.87	HARNESS, I/P WRG .....
99	Y37 6–SPD M/TRANS (MM6), A/C MAN CONT (C60), ACTIVE BRAKE CTL (JL4), SPEAKER SYSTEM 6 (UZ6)	15329333	1	1208.87	HARNESS, I/P WRG .....
99–00	Y67 4–SPD A/TRANS (M30), A/C FRT AUTO/AUX CONT (CJ2), T&T WHL (N37), (EXC TAIL & S/LP (T89) (EXPORT)	12190444	1	1233.23	HARNESS, I/P WRG (MAY REQUIRE 12450028 I/P COMPT LP & 12102616 PWR RCPT CONN) .....
99–00	Y67 4–SPD A/TRANS (M30), A/C MAN CONT (C60), (EXC T&T WHL (N37), TAIL & S/LP (T89) (EXPORT)	12190447	1	1233.23	HARNESS, I/P WRG (MAY REQUIRE 12450028 I/P COMPT LP & 12102616 PWR RCPT CONN) .....
99–00	Y67 6–SPD M/TRANS (MM6), A/C FRT AUTO/AUX CONT (CJ2), T&T WHL (N37), (EXC TAIL & S/LP (T89) (EXPORT)	12190449	1	1233.23	HARNESS, I/P WRG (MAY REQUIRE 12450028 I/P COMPT LP & 12102616 PWR RCPT CONN) .....

cardiagn.com

2.480 HARNESS – WIRE, Chassis Wiring(Con't)

99–00	Y67 6–SPD M/TRANS (MM6), A/C MAN CONT (C60), (EXC T&T WHL (N37), TAIL & S/LP (T89) (EXPORT)	12190452	1	1233.23	HARNESS, I/P WRG (MAY REQUIRE 12450028 I/P COMPT LP & 12102616 PWR RCPT CONN) .....
00	YY07 6–SPD M/TRANS (MM6), A/C FRT AUTO/AUX CONT (CJ2), (EXC ACTIVE BRAKE CTL (JL4), T&T WHL (N37), TAIL & S/LP (T89) (EXPORT)	10442572	1	1233.23	HARNESS, I/P WRG .....
00	Y07 4–SPD A/TRANS (M30), A/C FRT AUTO/AUX CONT (CJ2), ACTIVE BRAKE CTL (JL4), T&T WHL (N37), (EXC TAIL & S/LP (T89) (EXPORT)	10442559	1	1233.23	HARNESS, I/P WRG (INCLUDES PROVISIONS FOR MAN. SUPPRESSION SYS. INCLUDES HARN. INLINE P/DOOR) .....
00	Y07 4–SPD A/TRANS (M30), A/C MAN CONT (C60), ACTIVE BRAKE CTL (JL4), (EXC T&T WHL (N37), TAIL & S/LP (T89) (EXPORT)	10442562	1	1233.23	HARNESS, I/P WRG (INCLUDES PROVISIONS FOR MAN. SUPPRESSION SYS. INCLUDES HARN. INLINE P/DOOR) .....
00	Y07 6–SPD M/TRANS (MM6), A/C FRT AUTO/AUX CONT (CJ2), ACTIVE BRAKE CTL (JL4), (EXC TAIL & S/LP (T89) (EXPORT)	10442563	1	1233.23	HARNESS, I/P WRG (INCLUDES PROVISIONS FOR MAN. SUPPRESSION SYS. INCLUDES HARN. INLINE P/DOOR) .....
00	Y07 6–SPD M/TRANS (MM6), A/C MAN CONT (C60), ACTIVE BRAKE CTL (JL4), (EXC T&T WHL (N37) ..	10442566	1	1233.23	HARNESS, I/P WRG (INCLUDES PROVISIONS FOR MAN. SUPPRESSION SYS. INCLUDES HARN INLINE P/DOOR) .....
00	Y07 4–SPD A/TRANS (M30), A/C FRT AUTO/AUX CONT (CJ2), (EXC ACTIVE BRAKE CTL (JL4), TAIL & S/LP (T89) (EXPORT)	10442567	1	1233.23	HARNESS, I/P WRG (INCLUDES PROVISIONS FOR MAN. SUPPRESSION SYS. INCLUDES HARN.INLINE P/DOOR) .....
00	Y07 4–SPD A/TRANS (M30), A/C MAN CONT (C60), (EXC ACTIVE BRAKE CTL (JL4), T&T WHL (N37)	10442570	1	1233.23	HARNESS, I/P WRG (INCLUDES PROVISIONS FOR MAN. SUPPRESSION SYS. INCLUDES HARN.INLINE P/DOOR) .....
00	Y07 6–SPD M/TRANS (MM6), A/C FRT AUTO/AUX CONT (CJ2), (EXC ACTIVE BRAKE CTL (JL4), TAIL & S/LP (T89) (EXPORT)	10442571	1	1233.23	HARNESS, I/P WRG (INCLUDES PROVISIONS FOR MAN. SUPPRESSION SYS. INCLUDES HARN.INLINE P/DOOR) .....
00	Y07 6–SPD M/TRANS (MM6), A/C MAN CONT (C60), (EXC ACTIVE BRAKE CTL (JL4), T&T WHL (N37)	10442574	1	1233.23	HARNESS, I/P WRG (INCLUDES PROVISIONS FOR MAN. SUPPRESSION SYS. INCLUDES HARN.INLINE P/DOOR) .....
00	Y37 4–SPD A/TRANS (M30), A/C FRT AUTO/AUX CONT (CJ2), (EXC T&T WHL (N37), TAIL & S/LP (T89) (EXPORT)	10442575	1	1233.23	HARNESS, I/P WRG (INCLUDES PROVISIONS FOR MAN. SUPPRESSION SYS. INCLUDES HARN.INLINE P/DOOR) .....
00	Y37 6–SPD M/TRANS (MM6), A/C FRT AUTO/AUX CONT (CJ2), (EXC T&T WHL (N37), TAIL & S/LP (T89) (EXPORT)	10442579	1	1233.23	HARNESS, I/P WRG (INCLUDES PROVISIONS FOR MAN. SUPPRESSION SYS. INCLUDES HARN.INLINE P/DOOR) .....
00	Y37 6–SPD M/TRANS (MM6), A/C MAN CONT (C60) SPEAKER SYSTEM 6 (UZ6), (EXC ACTIVE BRAKE CTL (JL4)	10442582	1	1233.23	HARNESS, I/P WRG (INCLUDES PROVISIONS FOR MAN. SUPPRESSION SYS. INCLUDES HARN.INLINE P/DOOR) .....
00	Y37 6–SPD M/TRANS (MM6), A/C MAN CONT (C60), 4 SPKR SYS (UQ5), (EXC ACTIVE BRAKE CTL (JL4)	10442583	1	1233.23	HARNESS, I/P WRG (INCLUDES PROVISIONS FOR MAN. SUPPRESSION SYS. INCLUDES HARN.INLINE P/DOOR) .....
00	Y37 6–SPD M/TRANS (MM6), A/C MAN CONT (C60), ACTIVE BRAKE CTL (JL4), 4 SPKR SYS (UQ5)	10442585	1	1233.23	HARNESS, I/P WRG (INCLUDES PROVISIONS FOR MAN. SUPPRESSION SYS. INCLUDES HARN.INLINE P/DOOR) .....

cardiagn.com

2.480 HARNESS – WIRE, Chassis Wiring(Con't)

00	Y37 6–SPD M/TRANS (MM6), A/C MAN CONT (C60), ACTIVE BRAKE CTL (JL4), SPEAKER SYSTEM 6 (UZ6)	10442586	1	1233.23	HARNESS, I/P WRG (INCLUDES PROVISIONS FOR MAN. SUPPRESSION SYS. INCLUDES HARN.INLINE P/DOOR)
00	Y67 4–SPD A/TRANS (M30), A/C FRT AUTO/AUX CONT (CJ2), (EXC TAIL & S/LP (T89) (EXPORT)	10442575	1	1233.23	HARNESS, I/P WRG (INCLUDES PROVISIONS FOR MAN. SUPPRESSION SYS. INCLUDES HARN.INLINE P/DOOR)
00	Y67 4–SPD A/TRANS (M30), A/C MAN CONT (C60), (EXC T&T WHL (N37)	10442578	1	1233.23	HARNESS, I/P WRG (INCLUDES PROVISIONS FOR MAN. SUPPRESSION SYS. INCLUDES HARN.INLINE P/DOOR)
00	Y67 6–SPD M/TRANS (MM6), A/C MAN CONT (C60), (EXC T&T WHL (N37)	10442582	1	1233.23	HARNESS, I/P WRG (INCLUDES PROVISIONS FOR MAN. SUPPRESSION SYS. INCLUDES HARN.INLINE P/DOOR)
01–02	YY37 A/C FRT AUTO/AUX CONT (CJ2)	10310789	1	1233.23	HARNESS, I/P WRG
01	YY67 6–SPD M/TRANS (MM6), A/C MAN CONT (C60), (EXC T&T WHL (N37), (2ND DES)	10310790	1	1233.23	HARNESS, I/P WRG (2ND DSN USED ON/AFTER VIN #15107689, (1ST DSN 10448106))
01	Y07 4–SPD A/TRANS (M30), A/C FRT AUTO/AUX CONT (CJ2), ACTIVE BRAKE CTL (JL4), (EXC TAIL & S/LP (T89) (EXPORT)	10310779	1	1233.23	HARNESS, I/P WRG
01	Y07 4–SPD A/TRANS (M30), A/C MAN CONT (C60), ACTIVE BRAKE CTL (JL4), (EXC T&T WHL (N37), (2ND DES)	10310780	1	1233.23	HARNESS, I/P WRG (2ND DSN USED ON/AFTER VIN #15107689, (1ST DSN 10448088))
01	Y07 6–SPD M/TRANS (MM6), A/C FRT AUTO/AUX CONT (CJ2), ACTIVE BRAKE CTL (JL4), (EXC TAIL & S/LP (T89) (EXPORT), (2ND DES)	10310781	1	1233.23	HARNESS, I/P WRG (2ND DSN USED ON,AFTER VIN #15107689, (1ST DSN 10448089))
01	Y07 6–SPD M/TRANS (MM6), A/C MAN CONT (C60), ACTIVE BRAKE CTL (JL4), (EXC T&T WHL (N37), (2ND DES)	10310782	1	1233.23	HARNESS I/P WRG (2ND DSN USED ON/AFTER VIN #15107689, (1ST DSN 10448090))
01	Y07 4–SPD A/TRANS (M30), A/C FRT AUTO/AUX CONT (CJ2), ACTIVE BRAKE CTL (JL4), (EXC T&T WHL (N37), TAIL & S/LP (T89) (EXPORT), (1ST DES)	10448087	1	1233.23	HARNESS, I/P WRG (1ST DSN USED B/4 VIN #15107689, (2ND DSN 10310779))
01	Y07 4–SPD A/TRANS (M30), A/C MAN CONT (C60), ACTIVE BRAKE CTL (JL4), (EXC T&T WHL (N37), (1ST DES)	10448088	1	1233.23	HARNESS, I/P WRG (1ST DSN USED B/4 VIN #15107689, (2ND DSN 10310780))
01	Y07 6–SPD M/TRANS (MM6), A/C FRT AUTO/AUX CONT (CJ2), ACTIVE BRAKE CTL (JL4), T&T WHL (N37), (EXC TAIL & S/LP (T89) (EXPORT), (1ST DES)	10448089	1	1233.23	HARNESS, I/P WRG (1ST DSN USED B/4 VIN #15107689, (2ND DSN 10310781))
01	Y07 6–SPD M/TRANS (MM6), A/C MAN CONT (C60), ACTIVE BRAKE CTL (JL4), (EXC T&T WHL (N37), (1ST DES)	10448090	1	1233.23	HARNESS, I/P WRG (1ST DSN USED B/4 VIN #15107689, (2ND DSN 10310782))
01	Y37 A/C FRT AUTO/AUX CONT (CJ2)	10448105	1	1233.23	HARNESS, I/P WRG
01	Y67 4–SPD A/TRANS (M30), A/C FRT AUTO/AUX CONT (CJ2), (EXC TAIL & S/LP (T89) (EXPORT), (2ND DES)	10310787	1	1233.23	HARNESS, I/P WRG (2ND DSN USED ON/AFTER VIN #15107689, (1ST DSN 10448103))

cardiagn.com

2.480 HARNESS – WIRE, Chassis Wiring(Con't)

01	Y67 4–SPD A/TRANS (M30), A/C MAN CONT (C60), (EXC T&T WHL (N37), (2ND DES)	10310788	1	1233.23	HARNESS, I/P WRG (2ND DSN USED ON/AFTER VIN #15107689, (1ST DSN 10448104))
01	Y67 6–SPD M/TRANS (MM6), A/C FRT AUTO/AUX CONT (CJ2), (EXC TAIL & S/LP (T89) (EXPORT), (2ND DES)	10310789	1	1233.23	HARNESS, I/P WRG (2ND DSN USED ON/AFTER VIN #15107689, (1ST DSN 10448105))
01	Y67 4–SPD A/TRANS (M30), A/C FRT AUTO/AUX CONT (CJ2), T&T WHL (N37), (EXC TAIL & S/LP (T89) (EXPORT), (1ST DES)	10448103	1	1233.23	HARNESS, I/P WRG (1ST DSN USED B/4 VIN #15107689, (2ND DSN 10310787))
01	Y67 4–SPD A/TRANS (M30), A/C MAN CONT (C60), (EXC T&T WHL (N37), (1ST DES)	10448104	1	1233.23	HARNESS, I/P WRG (1ST DSN USED B/4 VIN #15107689, (2ND DSN 10310788))
01	Y67 6–SPD M/TRANS (MM6), A/C FRT AUTO/AUX CONT (CJ2), T&T WHL (N37), (EXC TAIL & S/LP (T89) (EXPORT), (1ST DES)	10448105	1	1233.23	HARNESS, I/P WRG (1ST DSN USED B/4 VIN #15107689, (2ND DSN 10310789))
01	Y67 6–SPD M/TRANS (MM6), A/C MAN CONT (C60), (EXC T&T WHL (N37), (1ST DES)	10448106	1	1233.23	HARNESS, I/P WRG (1ST DSN USED B/4 VIN #15107689, (2ND DSN 10310790))
02	YY07 4–SPD A/TRANS (M30), A/C FRT AUTO/AUX CONT (CJ2), (EXC TAIL & S/LP (T89) (EXPORT)	10310779	1	1233.23	HARNESS, I/P WRG
02	YY07 4–SPD A/TRANS (M30), A/C MAN CONT (C60), (EXC T&T WHL (N37)	10310780	1	1233.23	HARNESS, I/P WRG
02	YY67 4–SPD A/TRANS (M30), A/C MAN CONT (C60), (EXC T&T WHL (N37)	10310788	1	1233.23	HARNESS, I/P WRG
02	YY67 6–SPD M/TRANS (MM6), A/C MAN CONT (C60), (EXC T&T WHL (N37)	10310790	1	1233.23	HARNESS, I/P WRG
02	Y07 6–SPD M/TRANS (MM6), A/C FRT AUTO/AUX CONT (CJ2), (EXC TAIL & S/LP (T89) (EXPORT)	10310781	1	1233.23	HARNESS, I/P WRG
02	Y07 6–SPD M/TRANS (MM6) A/C MAN CONT (C60), (EXC T&T WHL (N37)	10310782	1	1233.23	HARNESS, I/P WRG
02	Y67 4–SPD A/TRANS (M30), A/C FRT AUTO/AUX CONT (CJ2), (EXC TAIL & S/LP (T89) (EXPORT)	10310787	1	1233.23	HARNESS, I/P WRG
02	Y67 6–SPD M/TRANS (MM6), A/C FRT AUTO/AUX CONT (CJ2), (EXC TAIL & S/LP (T89) (EXPORT)	10310789	1	1233.23	HARNESS, I/P WRG
97	Y 4–SPD A/TRANS (M30), (EXC CHASSIS, REALTIME DAMPING (F45)	12163195	1	375.00	HARNESS, TRANS WRG (AC–DELCO #12163195)
97	Y 6–SPD M/TRANS (MM6), (EXC CHASSIS, REALTIME DAMPING (F45)	12163196	1	375.00	HARNESS, TRANS WRG (AC–DELCO #12163196)
97	Y 4–SPD A/TRANS (M30), CHASSIS, REALTIME DAMPING (F45)	12163705	1	628.00	HARNESS, TRANS WRG (AC–DELCO #12163705)
97	Y 6–SPD M/TRANS (MM6), CHASSIS, REALTIME DAMPING (F45)	12163706	1	628.00	HARNESS, TRANS WRG (AC–DELCO #12163706)
98	Y 4–SPD A/TRANS (M30), (EXC CHASSIS, REALTIME DAMPING (F45), FRT ABS BRAKE LOC (JAG)	12163195	1	375.00	HARNESS, TRANS WRG (AC–DELCO #12163195)

cardiagn.com

2.480 HARNESS – WIRE, Chassis Wiring(Con't)

98	Y 6–SPD M/TRANS (MM6), (EXC CHASSIS, REALTIME DAMPING (F45), FRT ABS BRAKE LOC (JAG), EUROPEAN PROVISIONS (VD1) (EXPORT)	12163196	1	375.00	HARNESS, TRANS WRG (AC–DELCO #12163196)
98	Y 4–SPD A/TRANS (M30), CHASSIS, REALTIME DAMPING (F45), (EXC FRT ABS BRAKE LOC (JAG)	12163705	1	628.00	HARNESS, TRANS WRG (AC–DELCO #12163705)
98	Y 6–SPD M/TRANS (MM6), CHASSIS, REALTIME DAMPING (F45), (EXC FRT ABS BRAKE LOC (JAG), EUROPEAN PROVISIONS (VD1) (EXPORT)	12163706	1	628.00	HARNESS, TRANS WRG (AC–DELCO #12163706)
98	Y 4–SPD A/TRANS (M30), FRT ABS BRAKE LOC (JAG), (EXC CHASSIS, REALTIME DAMPING (F45)	12163790	1	367.43	HARNESS, TRANS WRG
98	Y 6–SPD M/TRANS (MM6), FRT ABS BRAKE LOC (JAG), (EXC CHASSIS, REALTIME DAMPING (F45), EUROPEAN PROVISIONS (VD1) (EXPORT)	12163791	1	367.43	HARNESS, TRANS WRG
98	Y 4–SPD A/TRANS (M30), CHASSIS, REALTIME DAMPING (F45), FRT ABS BRAKE LOC (JAG)	12163792	1	367.43	HARNESS, TRANS WRG
98	Y 6–SPD M/TRANS (MM6), CHASSIS, REALTIME DAMPING (F45), FRT ABS BRAKE LOC (JAG), (EXC EUROPEAN PROVISIONS (VD1) (EXPORT)	12163793	1	367.43	HARNESS, TRANS WRG
99–00	Y 4–SPD A/TRANS (M30), (EXC CHASSIS, REALTIME DAMPING (F45)	12189826	1	248.00	HARNESS, TRANS WRG (AC–DELCO #12189826)
99–00	Y 6–SPD M/TRANS (MM6), (EXC CHASSIS, REALTIME DAMPING (F45), EUROPEAN PROVISIONS (VD1) (EXPORT)	12189827	1	201.00	HARNESS, TRANS WRG (AC–DELCO #12189827)
99–00	Y 4–SPD A/TRANS (M30), CHASSIS, REALTIME DAMPING (F45)	12189828	1	375.00	HARNESS, TRANS WRG (AC–DELCO #12189828)
99–00	Y 6–SPD M/TRANS (MM6), CHASSIS, REALTIME DAMPING (F45), (EXC EUROPEAN PROVISIONS (VD1) (EXPORT)	12189829	1	311.00	HARNESS, TRANS WRG (AC–DELCO #12189829)
01–02	Y 4–SPD A/TRANS (M30), (EXC CHASSIS, REALTIME DAMPING (F45)	10448120	1	248.00	HARNESS, TRANS WRG
01–02	Y 6–SPD M/TRANS (MM6), (EXC CHASSIS, REALTIME DAMPING (F45), EUROPEAN PROVISIONS (VD1) (EXPORT)	10448121	1		HARNESS, TRANS WRG
01–02	Y 4–SPD A/TRANS (M30), CHASSIS, REALTIME DAMPING (F45)	10448122	1		HARNESS, TRANS WRG
01–02	Y 6–SPD M/TRANS (MM6), CHASSIS, REALTIME DAMPING (F45), (EXC EUROPEAN PROVISIONS (VD1) (EXPORT)	10448123	1	311.00	HARNESS, TRANS WRG
01–02	YY37	10448126	1		HARNESS, TRANS WRG
97	Y 5.7G (LS1)	15320549	1	29.84	WIRE, KNOCK SEN

cardiagn.com

2.480 HARNESS – WIRE, Chassis Wiring(Con't)

98	Y 5.7G (LS1), (1ST DES)	15320549	1	29.84	WIRE, KNOCK SEN (USE W/KNOCK SENSOR STAMPED 10456222 & W/INDEX TAB ON CONNECTOR TO SENSOR) (FOR 2ND DES SEE 15320925) .....
98	Y 5.7G (LS1), (2ND DES)	15320925	1	29.84	WIRE, KNOCK SEN (USE W/KNOCK SENSOR STAMPED 10456603 & CONNECTOR W/O INDEX TAB) (FOR 1ST DES SEE 15320549) .....
99–01	Y 5.7G (LS1)	15372170	1	29.84	WIRE, KNOCK SEN .....
01	Y 5.7S (LS3)	15372170	1	29.84	WIRE, KNOCK SEN .....
02	Y 5.7G (LS1)	15372170	1	29.84	WIRE, KNOCK SEN .....
02	Y 5.7S (LS6)	15372170	1	29.84	WIRE, KNOCK SEN .....
	*EXPORT**********EXPORT********** ***EXPORT**********EXPORT**********EXPORT*				
97	Y EUROPEAN PROVISIONS (VD1) (EXPORT)	12189883	1	944.44	HARNESS, FWD LP WRG .....
97	Y SIG & MKR LP (T90) (EXPORT), VE1 (EXPORT)	12189884	1	295.80	HARNESS, FWD LP WRG .....
99	Y07–67 SIG & MKR LP (T90) (EXPORT), (EXC ACTIVE BRAKE CTL (JL4)	12189975	1	301.92	HARNESS, FWD LP WRG .....
98	Y07–67 ACTIVE BRAKE CTL (JL4), SIG & MKR LP (T90) (EXPORT) ...	12189978	1	300.90	HARNESS, FWD LP WRG .....
00	Y07–67 SIG & MKR LP (T90) (EXPORT), (EXC ACTIVE BRAKE CTL (JL4)	15329405	1	301.92	HARNESS, FWD LP WRG .....
00	Y07–67 ACTIVE BRAKE CTL (JL4), SIG & MKR LP (T90) (EXPORT) ...	15329408	1	300.90	HARNESS, FWD LP WRG .....
02	YY07–67 SIG & MKR LP (T90) (EXPORT)	10310798	1	300.90	HARNESS, FWD LP WRG .....
97	Y07 SIG & MKR LP (T90) (EXPORT)	15329463	1	40.09	HARNESS, FWD LP WRG HARN EXTN .
98–99	Y07–67 SIG & MKR LP (T90) (EXPORT)	15329463	1	40.09	HARNESS, FWD LP WRG HARN EXTN .
00–02	Y07–67 SIG & MKR LP (T90) (EXPORT)	15329463	1	40.09	HARNESS, FWD LP WRG HARN EXTN .
97	Y 4–SPD A/TRANS (M30), A/C FRT AUTO/AUX CONT (CJ2), TAIL & S/LP (T89) (EXPORT), (EXC SPECIAL TAIL & S/LP (T93), CANADIAN (Z49)	12189872	1	1257.59	HARNESS, I/P WRG .....
97	Y 6–SPD M/TRANS (MM6), A/C FRT AUTO/AUX CONT (CJ2), TAIL & S/LP (T89) (EXPORT), (EXC SPECIAL TAIL & S/LP (T93), CANADIAN (Z49)	12189873	1	1257.59	HARNESS, I/P WRG .....
97	Y 4–SPD A/TRANS (M30), A/C MAN CONT (C60), TAIL & S/LP (T89) (EXPORT), (EXC SPECIAL TAIL & S/LP (T93), CANADIAN (Z49)	12189878	1		HARNESS, I/P WRG ....
98	Y07 4–SPD A/TRANS (M30), A/C FRT AUTO/AUX CONT (CJ2), TAIL & S/LP (T89) (EXPORT), (EXC FRT ABS BRAKE LOC (JAG), SPECIAL TAIL & S/LP (T93), CANADIAN (Z49)	12189817	1	1257.59	HARNESS, I/P WRG .....
98	Y07 6–SPD M/TRANS (MM6), A/C FRT AUTO/AUX CONT (CJ2), TAIL & S/LP (T89) (EXPORT), (EXC FRT ABS BRAKE LOC (JAG), SPECIAL TAIL & S/LP (T93), CANADIAN (Z49)	12189818	1	1257.59	HARNESS, I/P WRG .....

cardiagn.com

2.480 HARNESS – WIRE, Chassis Wiring(Con't)

98	Y07 4–SPD A/TRANS (M30), A/C MAN CONT (C60), TAIL & S/LP (T89) (EXPORT), (EXC FRT ABS BRAKE LOC (JAG), SPECIAL TAIL & S/LP (T93), CANADIAN (Z49) ...	12189823	1	1257.59	HARNESS, I/P WRG .....
98	Y07 6–SPD M/TRANS (MM6), A/C MAN CONT (C60), TAIL & S/LP (T89) (EXPORT), (EXC FRT ABS BRAKE LOC (JAG), SPECIAL TAIL & S/LP (T93), CANADIAN (Z49) ...	12189824	1	1257.59	HARNESS, I/P WRG .....
98	Y07 4–SPD A/TRANS (M30), A/C FRT AUTO/AUX CONT (CJ2), FRT ABS BRAKE LOC (JAG), ACTIVE BRAKE CTL (JL4), TAIL & S/LP (T89) (EXPORT)	12190404	1	1233.23	HARNESS, I/P WRG (MUST BE USED W/BODY CONT MDL LABELED 9359821 FOR 1998) .....
98	Y07 6–SPD M/TRANS (MM6), A/C FRT AUTO/AUX CONT (CJ2), FRT ABS BRAKE LOC (JAG), ACTIVE BRAKE CTL (JL4), TAIL & S/LP (T89) (EXPORT)	12190405	1	1233.23	HARNESS, I/P WRG (MUST BE USED W/BODY CONT MDL LABELED 9359821 FOR 1998) .....
98	Y07 4–SPD A/TRANS (M30), A/C MAN CONT (C60), FRT ABS BRAKE LOC (JAG), ACTIVE BRAKE CTL (JL4), TAIL & S/LP (T89) (EXPORT)	12190410	1	1233.23	HARNESS, I/P WRG (MUST BE USED W/BODY CONT MDL LABELED 9359821 FOR 1998) .....
98	Y07 6–SPD M/TRANS (MM6), A/C MAN CONT (C60), FRT ABS BRAKE LOC (JAG), ACTIVE BRAKE CTL (JL4), TAIL & S/LP (T89) (EXPORT)	12190411	1	1233.23	HARNESS, I/P WRG (MUST BE USED W/BODY CONT MDL LABELED 9359821 FOR 1998) .....
98	Y07 4–SPD A/TRANS (M30), A/C FRT AUTO/AUX CONT (CJ2), FRT ABS BRAKE LOC (JAG), TAIL & S/LP (T89) (EXPORT), (EXC ACTIVE BRAKE CTL (JL4), SPECIAL TAIL & S/LP (T93), CANADIAN (Z49)	12190416	1	1257.59	HARNESS, I/P WRG (MUST BE USED W/BODY CONT MDL LABELED 9359821 FOR 1998) .....
98	Y07 6–SPD M/TRANS (MM6), A/C FRT AUTO/AUX CONT (CJ2), FRT ABS BRAKE LOC (JAG), TAIL & S/LP (T89) (EXPORT), (EXC ACTIVE BRAKE CTL (JL4), SPECIAL TAIL & S/LP (T93), CANADIAN (Z49)	12190417	1	1257.59	HARNESS, I/P WRG (MUST BE USED W/BODY CONT MDL LABELED 9359821 FOR 1998) .....
98	Y07 4–SPD A/TRANS (M30), A/C MAN CONT (C60), FRT ABS BRAKE LOC (JAG), TAIL & S/LP (T89) (EXPORT), (EXC ACTIVE BRAKE CTL (JL4), SPECIAL TAIL & S/LP (T93), CANADIAN (Z49)	12190422	1	1257.59	HARNESS, I/P WRG (MUST BE USED W/BODY CONT MDL LABELED 9359821 FOR 1998) .....
98	Y07 6–SPD M/TRANS (MM6), A/C MAN CONT (C60), FRT ABS BRAKE LOC (JAG), TAIL & S/LP (T89) (EXPORT), (EXC ACTIVE BRAKE CTL (JL4), SPECIAL TAIL & S/LP (T93), CANADIAN (Z49)	12190423	1	1257.59	HARNESS, I/P WRG (MUST BE USED W/BODY CONT MDL LABELED 9359821 FOR 1998) .....
98	Y67 4–SPD A/TRANS (M30), A/C FRT AUTO/AUX CONT (CJ2), TAIL & S/LP (T89) (EXPORT), (EXC FRT ABS BRAKE LOC (JAG), SPECIAL TAIL & S/LP (T93), CANADIAN (Z49)	12189809	1	1257.59	HARNESS, I/P WRG .....

© 2001 GENERAL MOTORS SERVICE PARTS OPERATIONS

cardiagn.com

2.480 HARNESS – WIRE, Chassis Wiring(Con't)

98	Y67 4–SPD A/TRANS (M30), A/C MAN CONT (C60), TAIL & S/LP (T89) (EXPORT), (EXC FRT ABS BRAKE LOC (JAG), SPECIAL TAIL & S/LP (T93), CANADIAN (Z49) ...	12189810	1	1257.59	HARNESS, I/P WRG .....
98	Y67 6–SPD M/TRANS (MM6), A/C FRT AUTO/AUX CONT (CJ2), TAIL & S/LP (T89) (EXPORT), (EXC FRT ABS BRAKE LOC (JAG), SPECIAL TAIL & S/LP (T93), CANADIAN (Z49)	12189811	1	1257.59	HARNESS, I/P WRG .....
98	Y67 6–SPD M/TRANS (MM6), A/C MAN CONT (C60), TAIL & S/LP (T89) (EXPORT), (EXC FRT ABS BRAKE LOC (JAG), SPECIAL TAIL & S/LP (T93), CANADIAN (Z49) ...	12189812	1	1257.59	HARNESS, I/P WRG .....
98	Y67 4–SPD A/TRANS (M30), A/C FRT AUTO/AUX CONT (CJ2), FRT ABS BRAKE LOC (JAG), TAIL & S/LP (T89) (EXPORT)	12189988	1	1233.23	HARNESS, I/P WRG (MUST BE USED W/BODY CONT MDL LABELED 9359821 FOR 1998) .....
98	Y67 4–SPD A/TRANS (M30), A/C MAN CONT (C60), FRT ABS BRAKE LOC (JAG), TAIL & S/LP (T89) (EXPORT)	12189989	1	1233.23	HARNESS, I/P WRG (MUST BE USED W/BODY CONT MDL LABELED 9359821 FOR 1998) .....
98	Y67 6–SPD M/TRANS (MM6), A/C FRT AUTO/AUX CONT (CJ2), FRT ABS BRAKE LOC (JAG), TAIL & S/LP (T89) (EXPORT)	12189990	1	1233.23	HARNESS, I/P WRG (MUST BE USED W/BODY CONT MDL LABELED 9359821 FOR 1998) .....
98	Y67 6–SPD M/TRANS (MM6), A/C MAN CONT (C60), FRT ABS BRAKE LOC (JAG), TAIL & S/LP (T89) (EXPORT)	12189991	1	1233.23	HARNESS, I/P WRG (MUST BE USED W/BODY CONT MDL LABELED 9359821 FOR 1998) .....
99–00	Y07 4–SPD A/TRANS (M30), A/C FRT AUTO/AUX CONT (CJ2), ACTIVE BRAKE CTL (JL4), TAIL & S/LP (T89) (EXPORT)	12190426	1	1233.23	HARNESS, I/P WRG (MAY REQUIRE 12450028 I/P COMPT LP & 12102616 PWR RCPT CONN) .....
99–00	Y07 4–SPD A/TRANS (M30), A/C MAN CONT (C60), ACTIVE BRAKE CTL (JL4), TAIL & S/LP (T89) (EXPORT)	12190428	1	1233.23	HARNESS, I/P WRG (MAY REQUIRE 12450028 I/P COMPT LP & 12102616 PWR RCPT CONN) .....
99–00	Y07 6–SPD M/TRANS (MM6), A/C FRT AUTO/AUX CONT (CJ2), ACTIVE BRAKE CTL (JL4), TAIL & S/LP (T89) (EXPORT)	12190431	1	1233.23	HARNESS, I/P WRG (MAY REQUIRE 12450028 I/P COMPT LP & 12102616 PWR RCPT CONN) .....
99–00	Y07 6–SPD M/TRANS (MM6), A/C MAN CONT (C60), ACTIVE BRAKE CTL (JL4), TAIL & S/LP (T89) (EXPORT)	12190433	1	1233.23	HARNESS, I/P WRG (MAY REQUIRE 12450028 I/P COMPT LP & 12102616 PWR RCPT CONN) .....
99–00	Y07 4–SPD A/TRANS (M30), A/C FRT AUTO/AUX CONT (CJ2), TAIL & S/LP (T89) (EXPORT), (EXC ACTIVE BRAKE CTL (JL4)	12190436	1	1257.59	HARNESS, I/P WRG (MAY REQUIRE 12450028 I/P COMPT LP & 12102616 PWR RCPT CONN) .....
99–00	Y07 4–SPD A/TRANS (M30), A/C MAN CONT (C60), TAIL & S/LP (T89) (EXPORT), (EXC ACTIVE BRAKE CTL (JL4)	12190438	1	1257.59	HARNESS, I/P WRG (MAY REQUIRE 12450028 I/P COMPT LP & 12102616 PWR RCPT CONN) .....
99–00	Y07 6–SPD M/TRANS (MM6), A/C FRT AUTO/AUX CONT (CJ2), TAIL & S/LP (T89) (EXPORT), (EXC ACTIVE BRAKE CTL (JL4)	12190441	1	1257.59	HARNESS, I/P WRG (MAY REQUIRE 12450028 I/P COMPT LP & 12102616 PWR RCPT CONN) .....

cardiagn.com

2.480 HARNESS – WIRE, Chassis Wiring(Con't)

99–00	Y07 6–SPD M/TRANS (MM6), A/C MAN CONT (C60), TAIL & S/LP (T89) (EXPORT), (EXC ACTIVE BRAKE CTL (JL4)	12190443	1	1257.59	HARNESS, I/P WRG (MAY REQUIRE 12450028 I/P COMPT LP & 12102616 PWR RCPT CONN)
99–00	Y67 4–SPD A/TRANS (M30), A/C FRT AUTO/AUX CONT (CJ2), TAIL & S/LP (T89) (EXPORT)	12190446	1	1233.23	HARNESS, I/P WRG (MAY REQUIRE 12450028 I/P COMPT LP & 12102616 PWR RCPT CONN)
99–00	Y67 4–SPD A/TRANS (M30), A/C MAN CONT (C60), TAIL & S/LP (T89) (EXPORT)	12190448	1	1233.23	HARNESS, I/P WRG (MAY REQUIRE 12450028 I/P COMPT LP & 12102616 PWR RCPT CONN)
99–00	Y67 6–SPD M/TRANS (MM6), A/C FRT AUTO/AUX CONT (CJ2), TAIL & S/LP (T89) (EXPORT)	12190451	1	1233.23	HARNESS, I/P WRG (MAY REQUIRE 12450028 I/P COMPT LP & 12102616 PWR RCPT CONN)
99–00	Y67 6–SPD M/TRANS (MM6), A/C MAN CONT (C60), TAIL & S/LP (T89) (EXPORT)	12190453	1	1233.23	HARNESS, I/P WRG (MAY REQUIRE 12450028 I/P COMPT LP & 12102616 PWR RCPT CONN)
00	Y07 4–SPD A/TRANS (M30), A/C FRT AUTO/AUX CONT (CJ2), ACTIVE BRAKE CTL (JL4), TAIL & S/LP (T89) (EXPORT)	10442561	1	1233.23	HARNESS, I/P WRG (INCLUDES PROVISIONS FOR MAN. SUPPRESSION SYS. INCLUDES HARN. INLINE P/DOOR)
00	Y07 6–SPD M/TRANS (MM6), A/C FRT AUTO/AUX CONT (CJ2), ACTIVE BRAKE CTL (JL4), TAIL & S/LP (T89) (EXPORT)	10442565	1	1233.23	HARNESS, I/P WRG (INCLUDES PROVISIONS FOR MAN. SUPPRESSION SYS. INCLUDES HARN. INLINE P/DOOR)
00	Y07 4–SPD A/TRANS (M30), A/C FRT AUTO/AUX CONT (CJ2), TAIL & S/LP (T89) (EXPORT), (EXC ACTIVE BRAKE CTL (JL4)	10442569	1	1257.59	HARNESS, I/P WRG (INCLUDES PROVISIONS FOR MAN. SUPPRESSION SYS. INCLUDES HARN.INLINE P/DOOR)
00	Y07 6–SPD M/TRANS (MM6), A/C FRT AUTO/AUX CONT (CJ2), TAIL & S/LP (T89) (EXPORT), (EXC ACTIVE BRAKE CTL (JL4)	10442573	1	1257.59	HARNESS, I/P WRG (INCLUDES PROVISIONS FOR MAN. SUPPRESSION SYS. INCLUDES HARN.INLINE P/DOOR)
00	Y07 4–SPD A/TRANS (M30), A/C MAN CONT (C60), ACTIVE BRAKE CTL (JL4), TAIL & S/LP (T89) (EXPORT)	15329429	1	1233.23	HARNESS, I/P WRG
00	Y07 6–SPD M/TRANS (MM6), A/C MAN CONT (C60), ACTIVE BRAKE CTL (JL4), TAIL & S/LP (T89) (EXPORT)	15329434	1	1233.23	HARNESS, I/P WRG
00	Y07 4–SPD A/TRANS (M30), A/C MAN CONT (C60), TAIL & S/LP (T89) (EXPORT), (EXC ACTIVE BRAKE CTL (JL4)	15329439	1	1257.59	HARNESS, I/P WRG
00	Y07 6–SPD M/TRANS (MM6), A/C MAN CONT (C60), TAIL & S/LP (T89) (EXPORT), (EXC ACTIVE BRAKE CTL (JL4)	15329444	1	1257.59	HARNESS, I/P WRG
00	Y67 4–SPD A/TRANS (M30), A/C FRT AUTO/AUX CONT (CJ2), TAIL & S/LP (T89) (EXPORT)	10442577	1	1233.23	HARNESS, I/P WRG (INCLUDES PROVISIONS FOR MAN. SUPPRESSION SYS. INCLUDES HARN.INLINE P/DOOR)
00	Y67 6–SPD M/TRANS (MM6), A/C FRT AUTO/AUX CONT (CJ2), TAIL & S/LP (T89) (EXPORT)	10442581	1	1233.23	HARNESS, I/P WRG (INCLUDES PROVISIONS FOR MAN. SUPPRESSION SYS. INCLUDES HARN INLINE P/DOOR)
00	Y67 4–SPD A/TRANS (M30), A/C MAN CONT (C60), TAIL & S/LP (T89) (EXPORT)	15329449	1	1233.23	HARNESS, I/P WRG

cardiagn.com

2.480 HARNESS – WIRE, Chassis Wiring(Con't)

00	Y67 6–SPD M/TRANS (MM6), A/C MAN CONT (C60), TAIL & S/LP (T89) (EXPORT)	15329454	1	1233.23	HARNESS, I/P WRG
01	Y07 4–SPD A/TRANS (M30), A/C FRT AUTO/AUX CONT (CJ2), ACTIVE BRAKE CTL (JL4), TAIL & S/LP (T89) (EXPORT), (2ND DES)	10310783	1	1233.23	HARNESS, I/P WRG (2ND DSN USED ON/AFTER VIN #15107689, (1ST DSN 10448091))
01	Y07 6–SPD M/TRANS (MM6), A/C FRT AUTO/AUX CONT (CJ2), ACTIVE BRAKE CTL (JL4), TAIL & S/LP (T89) (EXPORT), (2ND DES)	10310784	1	1233.23	HARNESS, I/P WRG (2ND DSN USED ON/AFTER VIN #15107689, (1ST DSN 10448092))
01	Y07 4–SPD A/TRANS (M30), A/C FRT AUTO/AUX CONT (CJ2), ACTIVE BRAKE CTL (JL4), TAIL & S/LP (T89) (EXPORT), (1ST DES)	10448091	1	1233.23	HARNESS, I/P WRG (1ST DSN USED B/4 VIN #15107689, (2ND DSN 10310783))
01	Y07 6–SPD M/TRANS (MM6), A/C FRT AUTO/AUX CONT (CJ2), ACTIVE BRAKE CTL (JL4), TAIL & S/LP (T89) (EXPORT), (1ST DES)	10448092	1	1233.23	HARNESS, I/P WRG (1ST DSN USED B/4 VIN #15107689, (2ND DSN 10310784))
01	Y67 4–SPD A/TRANS (M30), A/C FRT AUTO/AUX CONT (CJ2), TAIL & S/LP (T89) (EXPORT), (2ND DES)	10310791	1	1233.23	HARNESS, I/P WRG (2ND DSN USED ON/AFTER VIN #15107689, (1ST DSN 10448107))
01	Y67 6–SPD M/TRANS (MM6), A/C FRT AUTO/AUX CONT (CJ2), TAIL & S/LP (T89) (EXPORT), (2ND DES)	10310792	1	1233.23	HARNESS, I/P WRG (2ND DSN USED ON/AFTER VIN #15107689, (1ST DSN 10448108))
01	Y67 4–SPD A/TRANS (M30), A/C FRT AUTO/AUX CONT (CJ2), TAIL & S/LP (T89) (EXPORT), (1ST DES)	10448107	1	1233.23	HARNESS, I/P WRG (1ST DSN USED B/4 VIN #15107689, (2ND DSN 10310791))
01	Y67 6–SPD M/TRANS (MM6), A/C FRT AUTO/AUX CONT (CJ2), TAIL & S/LP (T89) (EXPORT), (1ST DES)	10448108	1	1233.23	HARNESS, I/P WRG (1ST DSN USED B/4 VIN #15107689, (2ND DSN 10310792))
02	YY67 4–SPD A/TRANS (M30), A/C FRT AUTO/AUX CONT (CJ2), TAIL & S/LP (T89) (EXPORT)	10310791	1	1233.23	HARNESS, I/P WRG
02	YY67 6–SPD M/TRANS (MM6), A/C FRT AUTO/AUX CONT (CJ2), TAIL & S/LP (T89) (EXPORT)	10310792	1	1233.23	HARNESS, I/P WRG
02	Y07 4–SPD A/TRANS (M30), A/C FRT AUTO/AUX CONT (CJ2), TAIL & S/LP (T89) (EXPORT)	10310783	1	1233.23	HARNESS, I/P WRG
02	Y07 6–SPD M/TRANS (MM6), A/C FRT AUTO/AUX CONT (CJ2), TAIL & S/LP (T89) (EXPORT)	10310784	1	1233.23	HARNESS, I/P WRG
98	Y 6–SPD M/TRANS (MM6), CHASSIS, REALTIME DAMPING (F45), EUROPEAN PROVISIONS (VD1) (EXPORT), (EXC FRT ABS BRAKE LOC (JAG)	12189908	1	628.00	HARNESS, TRANS WRG (AC–DELCO #12189908)
98	Y 6–SPD M/TRANS (MM6), EUROPEAN PROVISIONS (VD1) (EXPORT), (EXC CHASSIS, REALTIME DAMPING (F45), FRT ABS BRAKE LOC (JAG)	12189909	1	425.00	HARNESS, TRANS WRG (AC–DELCO #12189909)
98	Y 6–SPD M/TRANS (MM6), CHASSIS, REALTIME DAMPING (F45), FRT ABS BRAKE LOC (JAG), EUROPEAN PROVISIONS (VD1) (EXPORT)	12189912	1	543.43	HARNESS, TRANS WRG

cardiagn.com

2.480 HARNESS – WIRE, Chassis Wiring(Con't)

98	Y 6--SPD M/TRANS (MM6), FRT ABS BRAKE LOC (JAG), EUROPEAN PROVISIONS (VD1) (EXPORT). (EXC CHASSIS, REALTIME DAMPING (F45)	12189913	1	367.44	HARNESS, TRANS WRG .....
99–00	Y 6–SPD M/TRANS (MM6), CHASSIS, REALTIME DAMPING (F45), EUROPEAN PROVISIONS (VD1) (EXPORT)	12189914	1	201.00	HARNESS, TRANS WRG (ENHANCE EVAP) (AC–DELCO #12189914) ....
99–00	Y 6–SPD M/TRANS (MM6), EUROPEAN PROVISIONS (VD1) (EXPORT), (EXC CHASSIS, REALTIME DAMPING (F45)	12189915	1	254.00	HARNESS, TRANS WRG (ENHANCE EVAP) (AC–DELCO #12189915) ....
01–02	Y 6–SPD M/TRANS (MM6), CHASSIS, REALTIME DAMPING (F45), EUROPEAN PROVISIONS (VD1) (EXPORT)	10448124	1		HARNESS, TRANS WRG (ENHANCE EVAP) .....
01–02	Y 6–SPD M/TRANS (MM6), EUROPEAN PROVISIONS (VD1) (EXPORT), (EXC CHASSIS, REALTIME DAMPING (F45)	10448125	1		HARNESS, TRANS WRG (ENHANCE EVAP) .....

6.512 MODULE, Steering Wheel

97	Y F/SEAT INFL RST SYS (AK5)	10407331	1	638.00	MODULE, STRG WHL INFL RST (14.865) .....
98	Y F/SEAT INFL RST SYS (AK5)	10411124	1	638.00	MODULE, STRG WHL INFL RST (14.865, ...
99–02	Y F/SEAT INFL RST SYS (AK5)	10416723	1	638.00	MODULE, STRG WHL INFL RST (14 865) .....

7.450 BRACKET – BULB – CONNECTOR – COVER – KNOB – MODULE – RELAY – RETAINER – SWITCH. Electronic Control Suspension

97–02	Y CHASSIS, REALTIME DAMPING (F45)	10280944	1	6.65	BRACKET, ELEK SUSP CONT MDL ....
01–02	Y	12160778	1	1.02	CONNECTOR, INLINE--TO ELEK SUSP MDL (BROWN) (24--WAY F) (W/O LEADS) (MIC/PAC 100) (03.670) .....
01–02	Y	12160779	1	2.23	CONNECTOR, INLINE--TO ELEK SUSP MDL (BROWN) (32--WAY F, W/O LEADS, MIC/PAC 100) (03.670) .....
97–02	Y	12102747	1	21.73	CONNECTOR, INLINE--TO S/ABS CONT ACTR (BLACK) (2--WAY F W/LEADS) (03.670) (AC--DELCO #PT374) .....
97	Y	12110207	1	2.28	CONNECTOR, MDL--ELEK SUSP CONT (BLUE) (32--WAY F W/O LEADSS) (03.670) .....
97--02	Y	12160778	1	1.02	CONNECTOR, MDL--ELEK SUSP CONT (BROWN) (24--WAY F) (W/O LEADS) (MIC/PAC 100) (03.670) ....
97--00	Y	12160779	1	2.23	CONNECTOR, MDL--ELEK SUSP CONT (BROWN) (32--WAY F, W/O LEADS, MIC/PAC 100) (03.670) .....
01–02	Y	12120103		46.60	CONNECTOR, SW--ELEK SUSP (BLACK) (2--WAY F) (W/LEADS) (02.630) (AC--DELCO #PT733)
97	Y07 CHASSIS, REALTIME DAMPING (F45)	10286260	LH	0.60	COVER, ELEK SUSP CONT MDL FIN
98--00	Y07--07 CHASSIS, REALTIME DAMPING (F45)	10286260	LH	0.60	COVER, ELEK SUSP CONT MDL FIN
01--02	Y07 CHASSIS, REALTIME DAMPING (F45)	10286260	LH	0.60	COVER, ELEK SUSP CONT MDL FIN

cardiagn.com

7.450 BRACKET – BULB – CONNECTOR – COVER – KNOB – MODULE – RELAY – RETAINER – SWITCH, Electronic Control Suspension(Con't)

01–02	Y67 CHASSIS, REALTIME DAMPING (F45), (19I)	10440580	1	9.45	COVER, ELEK SUSP CONT MDL FIN (BLACK)
01–02	Y67 CHASSIS, REALTIME DAMPING (F45), (92I)	10440581	1	9.45	COVER, ELEK SUSP CONT MDL FIN (PEWTER)
01–02	Y67 CHASSIS, REALTIME DAMPING (F45), (67I)	10440582	1	9.45	COVER, ELEK SUSP CONT MDL FIN (OAK)
01–02	Y67 CHASSIS, REALTIME DAMPING (F45), (70I)	10440583	1	9.45	COVER, ELEK SUSP CONT MDL FIN (RED)
97–99	Y CHASSIS, REALTIME DAMPING (F45), (EXC EUROPEAN PROVISIONS (VD1) (EXPORT)	09360581	1	934.00	MODULE, ELEK SUSP CONT (RTD MODULE/FAST SHOCK) (AC–DELCO #9360581)
00–02	YY07–67 CHASSIS, REALTIME DAMPING (F45)	09366711	1	695.00	MODULE, ELEK SUSP CONT
97–98	Y	12088567	1	16.45	RELAY, ROAD SENSING SUSP DPNR (GRAY) (4–WAY) (09.277) (AC–DELCO #15–8571)
97–02	Y07 CHASSIS, REALTIME DAMPING (F45)	10267772	1	3.45	RETAINER, ELEC SUSP CONT MDL FIN CVR (14.640)
98–01	Y67 CHASSIS, REALTIME DAMPING (F45)	10267772	1	3.45	RETAINER, ELEC SUSP CONT MDL FIN CVR (14.640)
02	Y67 CHASSIS REALTIME DAMPING (F45)	10267772	1	3.45	RETAINER, ELEC SUSP CONT MDL FIN CVR (14.640)
	*EXPORT***************EXPORT***************EXPORT***************EXPORT***************EXPORT*				
98–99	Y07–67 CHASSIS, REALTIME DAMPING (F45), EUROPEAN PROVISIONS (VD1) (EXPORT)	09360571	1	695.00	MODULE, ELEK SUSP CONT (RTD MODULE/FAST SHOCK)

9.262 BOLT – DUCT – OUTLET – PLUG – SEAL, Air Distributor

97–02	Y	10262421	RH	9.20	DUCT, FLR AIR OTLT
97–02	Y	10293194	LH	5.30	DUCT, FLR AIR OTLT
97–02	Y	10283464	RH	9.20	DUCT, FLR AIR OTLT RR (RIGHT SIDE ONLY)
97–02	Y	10282843	LH	9.20	DUCT, FLR RR AIR OTLT
97–02	Y	10282844	RH	8.80	DUCT, FLR RR AIR OTLT
97	Y07 SPEAKER SYSTEM 6 (UZ6)	10267874	LH	9.20	DUCT, FRT S/D AIR
98	Y07–67 SPEAKER SYSTEM 6 (UZ6)	10267874	LH	9.20	DUCT, FRT S/D AIR
99–02	Y SPEAKER SYSTEM 6 (UZ6)	10267874	LH	9.20	DUCT, FRT S/D AIR
99–00	Y37 4 SPKR SYS (UQ5)	10267874	LH	9.20	DUCT, FRT S/D AIR
97–00	Y (19I)	10403256	1	3.50	OUTLET, FLR AIR INR HALF (BLACK)
97	Y (92I)	10403257	1	3.50	OUTLET, FLR AIR INR HALF (PEWTER)
97–98	Y (94I)	10403258	1	3.50	OUTLET, FLR AIR INR HALF (RED)
98–02	Y07–67 (92I)	10403257	1	3.50	OUTLET, FLR AIR INR HALF (PEWTER)
98–02	Y07–67 (67I)	10403259	1	3.50	OUTLET, FLR AIR INR HALF (CAMEL)
99	Y07–67 (94I)	10403258	1	3.50	OUTLET, FLR AIR INR HALF (RED)
00–02	Y07–67 (70I)	10409411	1		OUTLET, FLR AIR INR HALF (RED)
01–02	Y07–67 (19I)	10403256	1	3.50	OUTLET, FLR AIR INR HALF (BLACK)
01–02	Y37 (19I), (70I)	10403256	1	3.50	OUTLET, FLR AIR INR HALF (BLACK)
97	Y (94I)	10403253	1	3.50	OUTLET, FLR AIR OTR HALF (RED)
97–00	Y (19I)	10414489	1	3.50	OUTLET, FLR AIR OTR HALF (BLACK)
97	Y (92I)	10414490	1	3.50	OUTLET, FLR AIR OTR HALF (SHALE/PEWTER)
98–99	Y07–67 (94I)	10403253	1	3.50	OUTLET, FLR AIR OTR HALF (RED)
98–02	Y07–67 (92I)	10414490	1	3.50	OUTLET FLR AIR OTR HALF (SHALE/PEWTER)
98–02	Y07–67 (67I)	10414492	1	3.50	OUTLET, FLR AIR OTR HALF (CAMEL)
00–02	Y07–67 (70I)	10409412	1		OUTLET, FLR AIR OTR HALF (RED)
01–02	Y07–67 (19I)	10414489	1	3.50	OUTLET, FLR AIR OTR HALF (BLACK)
01–02	Y37 (19I), (70I)	10414489	1	3.50	OUTLET, FLR AIR OTR HALF (BLACK)

cardiagn.com

9.262 BOLT – DUCT – OUTLET – PLUG – SEAL, Air Distributor(Con't)

97–99	Y SPEAKER SYSTEM 6 (UZ6)	10406518	LH	23.67	OUTLET, FRT S/D FRT AIR .....
99–00	Y37 4 SPKR SYS (UQ5)	10406518	LH	23.67	OUTLET, FRT S/D FRT AIR .....
00–02	Y	10406518	LH	23.67	OUTLET, FRT S/D FRT AIR .....
97–02	Y	10406514	LH	24.47	OUTLET, I/P CTR AIR .....
97	Y	10406515	RH	17.10	OUTLET, I/P CTR AIR .....
97–02	Y	10406516	1	17.10	OUTLET, I/P CTR AIR (FAR RIGHT POSITION) .....
98–02	Y	10406515	RH	17.10	OUTLET, I/P CTR AIR .....
97	Y07 SPEAKER SYSTEM 6 (UZ6) ...	10267885	LH	9.17	SEAL, FRT S/D AIR DUCT .....
98	Y07- 67 SPEAKER SYSTEM 6 (UZ6)	10267885	LH	9.17	SEAL, FRT S/D AIR DUCT .....
99–02	Y SPEAKER SYSTEM 6 (UZ6)	10267885	LH	9.17	SEAL, FRT S/D AIR DUCT .....
99–00	Y37 4 SPKR SYS (UQ5)	10267885	LH	9.17	SEAL, FRT S/D AIR DUCT .....

9.650 AMPLIFIER – CONNECTOR – RADIO – RELAY – SPEAKER, Radio Receiver

97–99	Y STEREO (UN0), SPEAKER SYSTEM 6 (UZ6)	16257601	1	1049.00	RADIO, AM/FM STEREO & CLK & CD PLYR (AC–DELCO #16257601) .....
00–02	Y STEREO (UN0), SPEAKER SYSTEM 6 (UZ6)	09390211	1	749.00	RADIO, AM/FM STEREO & CLK & CD PLYR (AC–DELCO #9390211) .....
97–99	Y STEREO, AM/FM W/AUTO REV CASSETTE, AUTO TONE (UL0), SPEAKER SYSTEM 6 (UZ6), (EXC JAPANESE RDO FREQ (UK1) (EXPORT), EUROPEAN RDO FREQ (UL2) (EXPORT)	16257631	1	689.00	RADIO, AM/FM STEREO & CLK & T/PLYR (AC–DELCO #16257631) ....
99–00	Y37 STEREO, AM/FM W/AUTO REV CASSETTE, AUTO TONE (UL0), 4 SPKR SYS (UQ5), (EXC JAPANESE RDO FREQ (UK1) (EXPORT), EUROPEAN RDO FREQ (UL2) (EXPORT)	16210221	1	619.00	RADIO, AM/FM STEREO & CLK & T/PLYR (AC–DELCO #16210221) ....
00–02	Y STEREO, AM/FM W/AUTO REV CASSETTE, AUTO TONE (UL0), SPEAKER SYSTEM 6 (UZ6), (EXC JAPANESE RDO FREQ (UK1) (EXPORT), EUROPEAN RDO FREQ (UL2) (EXPORT)	09390231	1	609.00	RADIO, AM/FM STEREO & CLK & T/PLYR (AC–DELCO #9390231) ....
97–02	Y	12193604	1	23.80	RELAY, RDO SPKR AMPF (GRAY) (SPST 280 MINI) (4–TERMINAL) (09.778) (AC–DELCO #15–8733) ...
97–02	Y SPEAKER SYSTEM 6 (UZ6)	10447355	2	319.00	SPEAKER, RDO FRT (3"TWIDDLER, 7"WOOFER, 100W AMP) (AC–DELCO #10447355) .....
99–00	Y37 4 SPKR SYS (UQ5)	16255371	2	77.00	SPEAKER, RDO FRT (AC–DELCO #16255371) .....
	*EXPORT*********EXPORT*********EXPORT*********EXPORT*********EXPORT*				
97–99	Y STEREO, AM/FM W/AUTO REV CASSETTE, AUTO TONE (UL0) EUROPEAN RDO FREQ (UL2) (EXPORT), SPEAKER SYSTEM 6 (UZ6)	16257611	1	699.00	RADIO, AM/FM STEREO & CLK & T/PLYR (AC–DELCO #16257611)
97–99	Y JAPANESE RDO FREQ (UK1) (EXPORT), STEREO, AM/FM W/AUTO REV CASSETTE, AUTO TONE (UL0), SPEAKER SYSTEM 6 (UZ6)	16257621	1	699.00	RADIO, AM/FM STEREO & CLK & T/PLYR (AC–DELCO #16257621)

cardiagn.com

9.650 AMPLIFIER – CONNECTOR – RADIO – RELAY – SPEAKER, Radio Receiver(Con't)

00–02	Y JAPANESE RDO FREQ (UK1) (EXPORT), STEREO, AM/FM W/AUTO REV CASSETTE, AUTO TONE (UL0), SPEAKER SYSTEM 6 (UZ6)	09390221	1	649.00	RADIO, AM/FM STEREO & CLK & T/PLYR (AC–DELCO #9390221)
00–02	Y STEREO, AM/FM W/AUTO REV CASSETTE, AUTO TONE (UL0), EUROPEAN RDO FREQ (UL2) (EXPORT), SPEAKER SYSTEM 6 (UZ6)	09390241	1	659.00	RADIO, AM/FM STEREO & CLK & T/PLYR (AC–DELCO #9390241)

9.665 EMBLEM – GRILLE – HOUSING – NUT – RETAINER – SCREEN – SPEAKER, Radio Auxiliary Speakers

97–02	Y SPEAKER SYSTEM 6 (UZ6)	10291759	2	11.78	EMBLEM, RDO FRT S/D SPKR GRL
97–00	Y SPEAKER SYSTEM 6 (UZ6), (19I)	10274045	RH	27.93	GRILLE, RDO FRT S/D SPKR (BLACK)
97–00	Y SPEAKER SYSTEM 6 (UZ6), (19I)	10274046	LH	27.93	GRILLE, RDO FRT S/D SPKR (BLACK)
97–98	Y SPEAKER SYSTEM 6 (UZ6), (92I)	10274047	RH	27.93	GRILLE, RDO FRT S/D SPKR (PEWTER)
97–98	Y SPEAKER SYSTEM 6 (UZ6), (92I)	10274048	LH	27.93	GRILLE, RDO FRT S/D SPKR (PEWTER)
97–98	Y (94I)	10274049	RH	27.93	GRILLE, RDO FRT S/D SPKR (RED)
97–98	Y (94I)	10274050	LH	27.93	GRILLE, RDO FRT S/D SPKR (RED)
98–00	Y07–67 SPEAKER SYSTEM 6 (UZ6), (67I)	10288250	LH	27.93	GRILLE, RDO FRT S/D SPKR (CAMEL)
98–00	Y07–67 SPEAKER SYSTEM 6 (UZ6), (67I)	10288251	RH	27.93	GRILLE, RDO FRT S/D SPKR (CAMEL)
99–00	Y07–67 SPEAKER SYSTEM 6 (UZ6), (92I)	10274047	RH	27.93	GRILLE, RDO FRT S/D SPKR (PEWTER)
99–00	Y07–67 SPEAKER SYSTEM 6 (UZ6), (92I)	10274048	LH	27.93	GRILLE, RDO FRT S/D SPKR (PEWTER)
99	Y07–67 SPEAKER SYSTEM 6 (UZ6), (94I)	10274049	RH	27.93	GRILLE RDO FRT S/D SPKR (RED)
99	Y07–67 SPEAKER SYSTEM 6 (UZ6), (94I)	10274050	LH	27.93	GRILLE, RDO FRT S/D SPKR (RED)
99–00	Y37 4 SPKR SYS (UQ5), (19I)	10201439	LH	27.93	GRILLE, RDO FRT S/D SPKR (BLACK)
99–00	Y37 4 SPKR SYS (UQ5), (19I)	10201440	RH	26.65	GRILLE, RDO FRT S/D SPKR (BLACK)
00	Y07–67 SPEAKER SYSTEM 6 (UZ6), (70I)	10400287	LH	27.93	GRILLE, RDO FRT S/D SPKR (RED)
00	Y07–67 SPEAKER SYSTEM 6 (UZ6), (70I)	10400288	RH	27.93	GRILLE, RDO FRT S/D SPKR (RED)
01–02	Y (19I)	10274045	RH	27.93	GRILLE, RDO FRT S/D SPKR (BLACK)
01–02	Y (19I)	10274046	LH	27.93	GRILLE, RDO FRT S/D SPKR (BLACK)
01–02	Y (70I)	10400287	LH	27.93	GRILLE, RDO FRT S/D SPKR (RED)
01–02	Y (70I)	10400288	RH	27.93	GRILLE, RDO FRT S/D SPKR (RED)
01–02	Y07–67 (92I)	10274047	RH	27.93	GRILLE, RDO FRT S/D SPKR (PEWTER)
01–02	Y07–67 (92I)	10274048	LH	27.93	GRILLE, RDO FRT S/D SPKR (PEWTER)
01–02	Y07–67 (67I)	10288250	LH	27.93	GRILLE, RDO FRT S/D SPKR (CAMEL)
01–02	Y07–67 (67I)	10288251	RH	27.93	GRILLE, RDO FRT S/D SPKR (CAMEL)
97–02	Y07	10287608	2	9.02	GRILLE, RDO RR SPKR (BLACK)
98–02	Y67	10414162	RH	27.93	GRILLE RDO RR SPKR
98–02	Y67	10414163	LH	27.93	GRILLE RDO RR SPKR
97–02	Y07	10288371	LH	27.66	HOUSING RDO RR SPKR (MTB SPKR)
97–02	Y07	10288372	RH	27.66	HOUSING, RDO RR SPKR (MTB SPKR)
98–02	Y67	10272205	LH	24.60	HOUSING RDO RR SPKR
98–02	Y67	10272206	RH	24.60	HOUSING, RDO RR SPKR
99–02	Y37	10272205	LH	24.60	HOUSING RDO RR SPKR
99–02	Y37	10272206	RH	24.60	HOUSING RDO RR SPKR

cardiagn.com

9.665 EMBLEM – GRILLE – HOUSING – NUT – RETAINER – SCREEN – SPEAKER, Radio Auxiliary Speakers(Con't)

98	Y	20540336	2	3.45	RETAINER, RDO RR SPKR GRL (PAINT TO MATCH) (FITS .18 HOLE, .7 LG, .43 OD, NYLON) (14.630)
98–02	Y67	15748479	4	*.62	RETAINER, RDO RR SPKR GRL (13.0MM WIDE) (YELLOW) (U–BASE) (16.575)
98–02	Y67	16754704	2	*.53	RETAINER, RDO RR SPKR GRL (10.056)
98–02	Y67	20514862	2	*.52	RETAINER, RDO RR SPKR GRL (12.804)
97–02	Y	10291755	LH	8.20	SCREEN, RDO FRT S/D SPKR
97–02	Y	10291756	RH	8.20	SCREEN, RDO FRT S/D SPKR

10.056 CLIP – RETAINER, Windshield Garnish Molding

97–02	Y	20540336	2	3.45	RETAINER, W/S SI G/MLDG (PAINT TO MATCH) (FITS .18 HOLE, .7 LG, .43 OD, NYLON) (14.630)

10.219 BEZEL – BOLT – RETAINER, Windshield Sunshade

97–02	Y	10431402	LH	3.45	BEZEL, S/S ROD (BLACK)
97–02	Y	10431403	RH	3.45	BEZEL, S/S ROD (BLACK)
97–02	Y	10411051	2	*1.05	RETAINER, S/S

10.235 BRACKET – NUT – PAD – PANEL – RETAINER, Instrument Panel Pad

97–02	Y	10289370	1	91.75	BRACKET, I/P DRVR KNEE BOLS (10.230)
97–02	Y	10289378	1	27.00	BRACKET, I/P DRVR KNEE BOLS OTR
97–02	Y	10282778	1	20.30	BRACKET, I/P PASS KNEE BOLS
97–02	Y	25836302	4	3.33	NUT, I/P DRVR KNEE BOLS BRKT (4.2X1.41 TAPPING) (SPL) (03.430)
97–02	Y	25836302	1	3.33	NUT, I/P DRVR KNEE BOLS OTR BRKT (4.2X1.41 TAPPING) (SPL) (03.430)
97	Y	10237960	4	.46	NUT, I/P PASS KNEE BOLS (M6X1.0) (10.612)
98–00	Y	10410308	4	*.61	NUT, I/P PASS KNEE BOLS (M6X1.0 RTR ID THD) (10.612)
97–02	Y	17988408	6	*1.03	NUT, I/P UPR TR PAD (TO I/P) (M4.2X1.41) (PUSH –IN, FOR 12MM SQ HOLE) (10.252)
97–02	Y	25836302	2	3.33	NUT, I/P UPR TR PAD (4.2X1.41 TAPPING) (SPL) (03.430)
97–02	Y (EXC HEAD UP DISPLAY (UV6)	10303180	1	748.00	PAD, I/P UPR TR (W/ OTLTS & DUCTS) (BLACK)
97–98	Y	10406513	1	748.00	PAD, I/P UPR TR (BLACK)
97–02	Y (EXC HEAD UP DISPLAY (UV6)	10443974	1	748.00	PAD, I/P UPR TR (LESS OTLTS & DUCTS) (BLACK)
99–02	Y HEAD UP DISPLAY (UV6)	10303140	1	748.00	PAD, I/P UPR TR (INCL S BEZELS DUCT & OUTLETS) (BLACK)
99–00	Y (EXC HEAD UP DISPLAY (UV6)	10406513	1	748.00	PAD, I/P UPR TR (BLACK)
99–02	Y HEAD UP DISPLAY (UV6)	10443975	1	748.00	PAD, I/P UPR TR (LESS BEZELS DUCT & OUTLETS) (BLACK)

10.260 BOLT – LATCH – NUT – RETAINER – STRIKER, Instrument Panel Compartment Door Lock and Console Compartment Door Lock

97–02	Y	03530001	2	1.40	BOLT, I/P COMPT DR LAT STRK (M4.2X1.41X12) (10.086)
97–02	Y (SEATING RESTRYS (AA6)	10261420	1	3.33	BOLT, I/P COMPT DR LK STRK

cardiagn.com

10.268 BOLT – LATCH – NUT – RETAINER – STRIKER, Instrument Panel Compartment Door Lock and Console Compartment Door Lock(Con't)

97–02	Y	10175813	2	3.33	NUT, F/FLR COMPT DR LAT STKR (10.252)
97–02	Y F/SEAT INFL RST SYS (AK5)	10279292	2	3.33	NUT, I/P COMPT DR LK STKR
97–02	Y F/SEAT INFL RST SYS (AK5)	10259700	1	24.05	STRIKER, I/P COMPT DR LK

10.351 DOOR, Front Door

97–02	Y	10414235	LH	654.00	DOOR, FRT SI
97–99	Y	10414236	RH	654.00	DOOR, FRT SI
00–02	Y	10433526	RH	654.00	DOOR, FRT SI

10.355 ABSORBER – DEFLECTOR – SEAL, Door Inner Panel

98–02	Y	10427263	LH	13.10	ABSORBER, FRT S/D INR PNL UPR ENGY
98–02	Y	10427276	RH	13.10	ABSORBER, FRT S/D INR PNL UPR ENGY
97–02	Y	10263411	LH	13.90	DEFLECTOR, FRT S/D WAT
97–02	Y	10263412	RH	13.90	DEFLECTOR, FRT S/D WAT

10.485 BATTERY – BOLT – BRACKET – BULB – CONNECTOR – MODULE – NUT – RECEIVER – SHIELD – TRANSMITTER, Door Electric and Vacuum Locks

00	Y37	10201420	4	3.33	BOLT, DR LK & SI WDO RLY (10.268)
97–02	Y	10201420	4	3.33	BOLT, FRT S/D CONT MDL (10 268)
97–02	Y	10282800	1	4.35	BRACKET, R/CON DR LK RCVR
97–02	Y	12080527	2	2.36	CONNECTOR, MDL–FRT S/D CONT (GREEN) (6–WAY F) (16 263)
97–02	Y	12160773	4	.74	CONNECTOR, MDL –FRT S/D CONT (26 –WAY F) (W/O LEADS)
97–02	Y	15305080	2	30.36	CONNECTOR, MDL–FRT S/D CONT (6 –WAY F W/LEADS) (13 000) (AC–DELCO #PT1032)
01–02	Y 6– SPD M/TRANS (MM6), 4 –SPD A/TRANS (M30)	12110247	1	20.05	CONNECTOR, MOT – DR LK ACTR (BLACK) (2 –WAY M) (W/LEADS) (13 000) (AC DELCO #PT288)
01–02	Y 6 7S (L66), MANUAL 6 SPD O/D TRANS, TREMEC (M12)	12110247	1	20.05	CONNECTOR MOT DR LK ACTR (BLACK) (2 WAY M) (W/LEADS) (13 000) (AC DELCO #PT288)
97–02	Y	12101850	2	10.83	CONNECTOR, SW DR LK (GREEN) (2 WAY F W/LEADS) (02 636) (AC DELCO #PT248)
00	Y	00381309	1	331.50	MODULE BODY CONT (02 660) (AC DELCO #0381309)
00	Y	10304030	1	331.50	MODULE, BODY CONT (02 660) (AC DELCO #10304030)
01–02	Y	10304031	1	331 50	MODULE BODY CONT (02 660) (AC DELCO #10304031)
97–00	Y	00362081	LH	210.00	MODULE FRT S/D CONT (DRVR) (S/D LOCAL INTERFACE)
97–00	Y	00362801	RH	210 00	MODULE FRT S/D CONT (PASS) (S/D LOCAL INTERFACE)
00–02	Y	00300680	LH	210 00	MODULE FRT S/D CONT (DRVR) (S/D LOCAL INTERFACE)
00–02	Y	10438102	RH	210 00	MODULE FRT S/D CONT (PASS) (S/D LOCAL INTERFACE)
97–02	Y	10206386	4	1 45	NUT FRT S/D CONT MDL (M6 X .80) (SPECIAL AK SERRED) (14 683)

cardiagn.com

10.512 BOLT – CLIP – HANDLE – NUT, Door Lock Inside Handle

97–02	Y	10406533	LH	31.50	HANDLE, FRT S/D I/S
97–02	Y	10406534	RH	31.50	HANDLE, FRT S/D I/S

10.515 BEZEL – CLIP, Door Lock Inside Handle Escutcheon (Trim Protector)

97–02	Y	10406531	LH	6.10	BEZEL, FRT S/D I/S HDL
97–02	Y	10406532	RH	6.10	BEZEL, FRT S/D I/S HDL

10.587 BUMPER – BUMPER KIT – PLUG, Door

97–02	Y	10283990	4	3.40	PLUG, FRT S/D INR PNL HOLE (FITS 54.1MM HOLE) (RECTANGULAR)
97–02	Y	10288134	2	3.40	PLUG, FRT S/D INR PNL HOLE (FITS 23.1MM HOLE) (ROUND)

10.694 RETAINER – WEATHERSTRIP, Door Weatherstrip

97–98	Y	20540330	8	3.45	RETAINER, FRT S/D W/STR (PAINT TO MATCH) (FITS .18 HOLE, .7 LG, .43 OD, NYLON) (14.630)
99–02	Y	20538173	6	3.45	RETAINER, FRT S/D W/STR (BLACK) (4.8 HOLE) (14.685)
99–02	Y	20540336	2	3.45	RETAINER, FRT S/D W/STR (PAINT TO MATCH) (FITS .18 HOLE, .7 LG, .43 OD, NYLON) (14.630)
99–02	Y37	10297742	LH	32.75	RETAINER, FRT S/D W/STR FRT UPR (METAL STRIP RETAINS FRT UPR W/STR) (10.695)
99–02	Y37	10297743	RH	32.75	RETAINER, FRT S/D W/STR FRT UPR (METAL STRIP RETAINS FRT UPR W/STR) (10.695)
99–02	Y37	10419267	RH	13.60	RETAINER, FRT S/D W/STR UPR RR (METAL STRIP RETAINS RR UPR W/STR) (10.695)
99–02	Y37	10419268	LH	13.60	RETAINER, FRT S/D W/STR UPR RR (METAL STRIP RETAINS RR UPR W/STR) (10.695)
97–02	Y	10302723	LH	77.00	WEATHERSTRIP, FRT S/D (EPDM COMBINATION)
97–02	Y	10302724	RH	77.00	WEATHERSTRIP, FRT S/D (EPDM COMBINATION)

10.695 BOLT – RETAINER, Door Opening

99–02	Y67	10262665	LH	15.65	RETAINER, FRT S/D W/DO UPR RR W/STR (14.120)
99–02	Y67	10262666	RH	15.65	RETAINER, FRT S/D W/DO UPR RR W/STR (14.120)

10.703 CLIP, Front Door Window Glass Run Channel

97–01	Y07 DUAL REMOVEABLE ROOF (C2U)	10400012	4	20.95	CLIP, FRT S/D W/DO W/STR RET (W/ PNL RET ALUM)
97–01	Y07 CLEAR ROOF PANEL (CC3) REMOVABLE SUNROOF (CF7)	10400012	2	20.95	CLIP, FRT S/D W/DO W/STR RET
99–01	Y07	10400012	2	20.95	CLIP, FRT S/D W/DO W/STR RET (W/ PNL RET ALUM)
99–01	Y37	10400012	2	20.95	CLIP, FRT S/D W/DO W/STR RET (W/ PNL RET ALUM)
02	Y07 DUAL REMOVEABLE ROOF (C2U)	10400012	4	20.95	CLIP, FRT S/D W/DO W/STR RET (W/ PNL RET ALUM)
02	Y07 CLEAR ROOF PANEL (CC3) REMOVABLE SUNROOF (CF7)	10400012	2	20.95	CLIP, FRT S/D W/DO W/STR RET

cardiagn.com

10.703 CLIP, Front Door Window Glass Run Channel(Con't)

02	Y37	10408012	2	20.95	CLIP, FRT S/D WDO W/STR RET (RF PNL RET ALUM)
02	Y67	10408012	2	20.95	CLIP, FRT S/D WDO W/STR RET (RF PNL RET ALUM)

10.710 BOLT – RETAINER – SEALING STRIP – WEATHERSTRIP Front Door Window Glass Channel (Outer & Inner)

97–02	Y07	10252847	LH	30.50	RETAINER, FRT S/D WDO FRT W/STR
97–02	Y07	10252848	RH	30.50	RETAINER, FRT S/D WDO FRT W/STR
98–02	Y67	10252847	LH	30.50	RETAINER, FRT S/D WDO FRT W/STR
98–02	Y67	10252848	RH	30.50	RETAINER, FRT S/D WDO FRT W/STR
97–01	Y07	10290393	LH	20.10	RETAINER, FRT S/D WDO RR W/STR
97–02	Y07	10290394	RH	20.10	RETAINER, FRT S/D WDO RR W/STR
98–99	Y67	10252858	RH	11.00	RETAINER, FRT S/D WDO RR W/STR
98–99	Y67	10446410	LH	13.20	RETAINER, FRT S/D WDO RR W/STR
98–99	Y67	10446411	LH	13.20	RETAINER, FRT S/D WDO RR W/STR (USE TOGETHER W/ P/N 10446410)
98	Y67	20540336	2	3.46	RETAINER, FRT S/D WDO RR W/STR (PUSH IN) (UPR) (PAINT TO MATCH) (FITS .18 HOLE, .7 LG, .43 OD, NYLON) (14.630)
99–02	Y67	20514862	2	[illegible]	RETAINER, FRT S/D WDO RR W/STR (PUSH IN) (12.804)
00	Y67 (1ST DES)	10252858	RH	11.00	RETAINER, FRT S/D WDO RR W/STR (USED ON VEHICLES WHERE FRONT END OF RETAINER IS SEALED TO REST OF RETAINER)
00	Y67 (2ND DES)	10446410	LH	13.20	RETAINER, FRT S/D WDO RR W/STR (ONE PIECE CURVED)
00	Y67 (1ST DES)	10446410	LH	13.20	RETAINER, FRT S/D WDO RR W/STR
00	Y67 (2ND DES)	10446411	LH	13.20	RETAINER, FRT S/D WDO RR W/STR (FLAT END ONE PIECE) (USED ON VEHICLES W/FRONT END OF RETAINER AS A SEPARATE PART THAT ATTACHES TO THE REST OF THE RETAINER W/BOLT/SCREWS)
00	Y67 (1ST DES)	10446411	LH	13.20	RETAINER, FRT S/D WDO RR W/STR (USE TOGETHER W/ P/N 10446410)
00	Y67 (2ND DES)	10446412	RH	13.20	RETAINER, FRT S/D WDO RR W/STR (ONE PIECE CURVED)
00	Y67 (2ND DES)	10446413	RH	13.20	RETAINER, FRT S/D WDO RR W/STR (FLAT END ONE PIECE) (USED ON VEHICLES W/FRONT END OF RETAINER AS A SEPARATE PART THAT ATTACHES TO THE REST OF THE RETAINER W/BOLT/SCREWS)
01–02	Y67	10446410	LH	13.20	RETAINER, FRT S/D WDO RR W/STR
01–02	Y67	10446411	LH	13.20	RETAINER, FRT S/D WDO RR W/STR (FLAT END ONE PIECE)
01–02	Y67	10446412	RH	13.20	RETAINER, FRT S/D WDO RR W/STR
01–02	Y67	10446413	RH	13.20	RETAINER, FRT S/D WDO RR W/STR (FLAT END ONE PIECE)
02	Y07	10290393	LH	20.10	RETAINER, FRT S/D WDO RR W/STR
98–00	Y67	10252854	RH	15.06	RETAINER, FRT S/D WDO UPR FRT W/STR
98–00	Y67	10300189	LH	15.06	RETAINER, FRT S/D WDO UPR FRT W/STR
99–02	Y37	20538173	2	3.46	RETAINER, FRT S/D WDO UPR FRT W/STR (PUSH IN) (BLACK) (4.8 [illegible])

cardiagn.com

10.710 BOLT – RETAINER – SEALING STRIP – WEATHERSTRIP, Front Door Window Glass Channel (Outer & Inner)(Con't)

99-02	Y37	20540323	6	3.45	RETAINER, FRT S/D WDO UPR FRT W/STR (PUSH IN) (PAINT TO MATCH) (FITS .18 HOLE, .7 LG, .43 OD, NYLON) (14.630)
01-02	Y67	10308189	LH	15.05	RETAINER, FRT S/D WDO UPR FRT W/STR
01-02	Y67	10308190	RH	15.05	RETAINER, FRT S/D WDO UPR FRT W/STR
97-02	Y07 DUAL REMOVEABLE ROOF (C2L)	10252849	LH	22.25	RETAINER, FRT S/D WDO UPR W/STR (RF PNL RET ALUM)
97-02	Y07 CLEAR ROOF PANEL (CC3), REMOVABLE SUNROOF (CF7)	10252849	LH	22.25	RETAINER, FRT S/D WDO UPR W/STR (RF PNL RET ALUM)
97-02	Y07 DUAL REMOVEABLE ROOF (C2L)	10252850	RH	22.25	RETAINER, FRT S/D WDO UPR W/STR (RF PNL RET ALUM) (NON ENCAPSULATED)
97-02	Y07 CLEAR ROOF PANEL (CC3), REMOVABLE SUNROOF (CF7)	10252850	RH	22.25	RETAINER, FRT S/D WDO UPR W/STR (RF PNL RET ALUM) (NON ENCAPSULATED)
97	Y07	10252880	RH	20.80	SEALING STRIP, FRT S/D WDO OTR
98-00	Y07	10447039	LH	23.05	SEALING STRIP, FRT S/D WDO OTR
98-00	Y07	10447040	RH	23.05	SEALING STRIP, FRT S/D WDO OTR
98-00	Y67	10409129	LH	23.05	SEALING STRIP, FRT S/D WDO OTR
98-01	Y67	10409130	RH	23.05	SEALING STRIP, FRT S/D WDO OTR
98-00	Y67	10447043	RH	23.05	SEALING STRIP, FRT S/D WDO OTR
99-00	Y37	10431426	LH	23.05	SEALING STRIP, FRT S/D WDO OTR
99-00	Y37	10447046	RH	22.75	SEALING STRIP, FRT S/D WDO OTR
01-02	Y07	10313420	RH	23.05	SEALING STRIP, FRT S/D WDO OTR
01-02	Y07	10313421	LH	23.05	SEALING STRIP, FRT S/D WDO OTR
01-02	Y37	10313426	RH	22.75	SEALING STRIP, FRT S/D WDO OTR
01-02	Y37	10313427	LH	22.75	SEALING STRIP, FRT S/D WDO OTR
01-02	Y67	10313423	LH	23.05	SEALING STRIP, FRT S/D WDO OTR
01-02	Y67	10313424	RH	23.05	SEALING STRIP, FRT S/D WDO OTR
98-02	Y67	10236329	LH	47.25	WEATHERSTRIP, FRT S/D WDO UPR RR
98-02	Y67	10236330	RH	47.25	WEATHERSTRIP, FRT S/D WDO UPR RR
98-02	Y67	10415919	LH	69.00	WEATHERSTRIP, FRT S/D WDO RR
98-02	Y67	10415920	RH	69.00	WEATHERSTRIP, FRT S/D WDO RR
97-00	Y07 DUAL REMOVEABLE ROOF (C2L)	10236315	LH	47.75	WEATHERSTRIP, FRT S/D WDO UPR
97-00	Y07 CLEAR ROOF PANEL (CC3) REMOVABLE SUNROOF (CF7)	10236315	LH	47.75	WEATHERSTRIP, FRT S/D WDO UPR
97-00	Y07 CLEAR ROOF PANEL (CC3) REMOVABLE SUNROOF (CF7)	10236316	RH	47.75	WEATHERSTRIP, FRT S/D WDO UPR
97-00	Y07 DUAL REMOVEABLE ROOF (C2L)	10236316	RH	47.75	WEATHERSTRIP, FRT S/D WDO UPR
01	Y07 DUAL REMOVEABLE ROOF (C2L)	10313370	LH	47.75	WEATHERSTRIP, FRT S/D WDO UPR
01-02	Y07 CLEAR ROOF PANEL (CC3) REMOVABLE SUNROOF (CF7)	10313370	LH	47.75	WEATHERSTRIP, FRT S/D WDO UPR
01-02	Y07 CLEAR ROOF PANEL (CC3) REMOVABLE SUNROOF (CF7)	10313371	RH	47.75	WEATHERSTRIP, FRT S/D WDO UPR
01-02	Y07 DUAL REMOVEABLE ROOF (C2L)	10313371	RH	47.75	WEATHERSTRIP, FRT S/D WDO UPR
02	Y07 DUAL REMOVEABLE ROOF (C2L)	10313370	LH	47.75	WEATHERSTRIP, FRT S/D WDO UPR
98-02	Y67	10236327	LH	56.25	WEATHERSTRIP, FRT S/D WDO UPR FRT

cardiagn.com

10.710 BOLT – RETAINER – SEALING STRIP – WEATHERSTRIP, Front Door Window Glass Channel (Outer & Inner)(Con't)

98–02	Y67	10236328	RH	55.25	WEATHERSTRIP, FRT S/D WDO UPR FRT
99–02	Y37	10310680	RH	150.00	WEATHERSTRIP, FRT S/D WDO UPR FRT
99–02	Y37	10415921	LH	150.00	WEATHERSTRIP, FRT S/D WDO UPR FRT

10.777 BOLT – BULB – CONNECTOR – SWITCH, Door Window

97–02	Y	12135165	RH	54.50	SWITCH, SI WDO
97	Y07 CONVENIENCE PKG (AAB)	12135166	LH	93.00	SWITCH, SI WDO (SNAP FIT ASM) (DRIVER) (W/POWER MIRRORS W/MEMORY W/DOOR LOCKS))
97	Y07 (EXC CONVENIENCE PKG (AAB)	12135167	LH	73.00	SWITCH, SI WDO (SNAP FIT ASM) (DRIVER) (W/POWER MIRRORS W/MEMORY W/DOOR LOCKS)) (& MIRRORS & DR LK)
98–00	Y07–67 CONVENIENCE PKG (AAB)	12135166	LH	93.00	SWITCH, SI WDO (SNAP FIT ASM) (DRIVER) (W/POWER MIRRORS W/MEMORY W/DOOR LOCKS))
98	Y07–67 (EXC CONVENIENCE PKG (AAB)	12135167	LH	73.00	SWITCH, SI WDO (SNAP FIT ASM) (DRIVER) (W/POWER MIRRORS W/MEMORY W/DOOR LOCKS)) (& MIRRORS & DR LK)
99–02	Y (EXC CONVENIENCE PKG (AAB)	12135167	LH	73.00	SWITCH, SI WDO (DRIVER) (W/POWER MIRRORS W/MEMORY W/DOOR LOCKS)) (& MIRRORS & DR LK)
01–02	Y CONVENIENCE PKG (AAB)	12135166	LH	93.00	SWITCH, SI WDO (DRIVER (W/POWER MIRRORS W/MEMORY W/DOOR LOCKS))

11.175 CLIP – PLATE, Front Door Sill

97	Y (94I)	10272389	LH	35.25	PLATE, FRT S/D SILL TR (RED)
97	Y (94I)	10272390	RH	35.25	PLATE, FRT S/D SILL TR (RED)
97–02	Y (19I)	10430855	LH	30.50	PLATE, FRT S/D SILL TR (BLACK)
97–02	Y (19I)	10430856	RH	30.50	PLATE, FRT S/D SILL TR (BLACK)
97	Y (92I)	10430857	LH	30.50	PLATE, FRT S/D SILL TR (PEWTER)
97	Y (92I)	10430858	RH	30.50	PLATE, FRT S/D SILL TR (PEWTER)
00–02	Y	10420075	LH	20.00	PLATE, FRT S/D SILL TR (LOW GLOSS BLACK) (CORVETTE CROSSED FLAG LOGO)
00–02	Y	10420076	RH	20.00	PLATE, FRT S/D SILL TR (LOW GLOSS BLACK) (CORVETTE CROSSED FLAG LOGO)
98–99	Y07–67 (94I)	10272389	LH	35.25	PLATE, FRT S/D SILL TR (RED)
98–99	Y07–67 (94I)	10272390	RH	35.25	PLATE, FRT S/D SILL TR (RED)
98–02	Y07–67 (92I)	10430857	LH	30.50	PLATE, FRT S/D SILL TR (PEWTER)
98–02	Y07–67 (92I)	10430858	RH	30.50	PLATE, FRT S/D SILL TR (PEWTER)
98–02	Y07–67 (67I)	10430861	LH	30.50	PLATE, FRT S/D SILL TR (OAK)
98–02	Y07–67 (67I)	10430862	RH	30.50	PLATE, FRT S/D SILL TR (OAK)
00–02	Y07–67 (70I)	10430863	LH	30.50	PLATE, FRT S/D SILL TR (RED)
00–02	Y07–67 (70I)	10430864	RH	30.50	PLATE, FRT S/D SILL TR (RED)

11.350 CARPET, Front Seat Back

97–02	Y07 (19I)	10272042	1	78.75	CARPET, FT SEAT BK BODY PNL (BLACK)
97–02	Y07 (92I)	10273214	1	78.75	CARPET, FT SEAT BK BODY PNL (PEWTER)
97–99	Y07 (94I)	10273215	1	78.75	CARPET, FT SEAT BK BODY PNL (RED)

cardiagn.com

11.358 CARPET, Front Seat Back(Con't)

98-02	Y07 (67I)	10285190	1	78.75	CARPET, F/SEAT BK BODY PNL (CAMEL)
98-00	Y67 (19I)	10277793	1	78.75	CARPET, F/SEAT BK BODY PNL (BLACK)
98-00	Y67 (92I)	10277794	1	78.75	CARPET, F/SEAT BK BODY PNL (PEWTER)
98-99	Y67 (54I)	10277795	1	78.75	CARPET, F/SEAT BK BODY PNL (RED)
98-00	Y67 (67I)	10285190	1	78.75	CARPET, F/SEAT BK BODY PNL (CAMEL)
99	Y37 (19I)	10419553	1	78.75	CARPET, F/SEAT BK BODY PNL (BLACK)
00-02	Y07 (70I)	10409427	1	78.75	CARPET, F/SEAT BK BODY PNL (RED)
00-02	Y37 (19I)	10431952	1	78.75	CARPET, F/SEAT BK BODY PNL (BLACK)
00	Y67 (70I)	10409428	1	78.75	CARPET, F/SEAT BK BODY PNL (RED)
01-02	Y67 (19I)	10439078	1	78.75	CARPET, F/SEAT BK BODY PNL (BLACK)
01-02	Y67 (92I)	10439079	1	78.75	CARPET, F/SEAT BK BODY PNL (PEWTER)
01-02	Y67 (67I)	10439080	1	78.75	CARPET, F/SEAT BK BODY PNL (OAK)
01-02	Y67 (70I)	10439081	1	78.75	CARPET, F/SEAT BK BODY PNL (RED)

11.362 PANEL, Front Seat Cushion Side

07-08	Y	12455426	1	6.10	PANEL, D/SEAT CUSH OTR FIN (3 ATTACHING HOLES)
00-02	Y07-67	12455426	1	6.10	PANEL, D/SEAT CUSH OTR FIN (3 ATTACHING HOLES)
00-02	Y37 MAN RECL FRT BKT ST, DELUXE (AR9)	12455426	1	6.10	PANEL, D/SEAT CUSH OTR FIN (3 ATTACHING HOLES)
97	Y	10273008	1	10.40	PANEL, P/SEAT CUSH OTR FIN (BLACK)
98-02	Y07-67	12455427	1	6.10	PANEL, P/SEAT CUSH OTR FIN

11.368 RETAINER, Front Seat Back Panel

07-02	Y	20011461	2	3.46	RETAINER, D/SEAT BK CUSH FRM SUPT (12 800)

11.373 BOLT – FRAME – INSULATOR – PANEL, Front Seat Back

07-02	Y	10277966	1	8.75	BOLT, D/SEAT BK CUSH FRM
07-02	Y	10277966	1	8.75	BOLT P/SEAT BK CUSH FRM
07	Y MAN RECL FRT BKT ST DELUXE (AR9)	12455474	1	171.00	FRAME D/SEAT BK CUSH
07-08	Y RECL FRT BKT ST LUXURY (AQ9) IL3	12455474	1	171.00	FRAME, D/SEAT BK CUSH (USE W/TRIM CODES ENDING IN 3, 4)
08	MAN RECL FRT BKT ST DELUXE (AR9)	12455474	1	171.00	FRAME D/SEAT BK CUSH (2 BLADDER SYSTEM MUST MODIFY REVISE WINGS AND ADD 6 RIVET HOLES PER GUIDE MARKS ON FRAME AS REQD 1 BOLSTER SYSTEM 6 HOLES NOT REQD)
08-01	Y07 CONVENIENCE PKG (AAB) RECL FRT BKT ST LUXURY (AQ9)	12455636	1		FRAME D/SEAT BK CUSH
08-00	Y67 CONVENIENCE PKG (AAB) MAN RECL FRT BKT ST DELUXE (AR9)	12455636	1		FRAME D/SEAT BK CUSH
08-00	Y67 8 WAY PWR P/SEAT ADJR (AG2) RECL FRT BKT ST LUXURY (AQ9) IL3	12455636	1		FRAME D SEAT BK CUSH
00	Y RECL FRT BKT ST LUXURY (AQ9) IL3	12455474	1	171.00	FRAME D SEAT BK CUSH

cardiagn.com

11.373 BOLT – FRAME – INSULATOR – PANEL, Front Seat Back(Con't)

99	Y MAN RECL FRT BKT ST, DELUXE (AR9)	12455474	1	171.00	FRAME, D/SEAT BK CUSH
99–00	Y37 MAN RECL FRT BKT ST, DELUXE (AR9), (EXC CONVENIENCE PKG (AAB)	12455536	1		FRAME, D/SEAT BK CUSH
99–02	Y37 MAN RECL FRT BKT ST, DELUXE (AR9)	12455536	1		FRAME, D/SEAT BK CUSH
00	Y RECL FRT BKT ST, LUXURY (AQ9), IL3	12455536	1		FRAME, D/SEAT BK CUSH
00	Y MAN RECL FRT BKT ST, DELUXE (AR9)	12455536	1		FRAME, D/SEAT BK CUSH
01	Y67 CONVENIENCE PKG (AAB), RECL FRT BKT ST, LUXURY (AQ9)	12455536	1		FRAME, D/SEAT BK CUSH
01–02	Y67 MAN RECL FRT BKT ST, DELUXE (AR9)	12455536	1		FRAME, D/SEAT BK CUSH
02	Y07	12455536	1		FRAME, D/SEAT BK CUSH
97	Y MAN RECL FRT BKT ST, DELUXE (AR9)	12455474	1	171.00	FRAME, P/SEAT BK CUSH
97–98	Y RECL FRT BKT ST, LUXURY (AQ9), 6-WAY PWR P/SEAT ADJR (AG2), IL3	12455474	1	171.00	FRAME, P/SEAT BK CUSH (2 BLADDER SYSTEM MUST MODIFY–REVISE WINGS AND ADD 6 RIVET HOLES, PER GUIDE MARKS ON FRAME AS REQD. 1 BOLSTER SYSTEM 6 HOLES NOT REQD.)
98	Y MAN RECL FRT BKT ST, DELUXE (AR9)	12455474	1	171.00	FRAME, P/SEAT BK CUSH (2 BLADDER SYSTEM MUST MODIFY–REVISE WINGS AND ADD 6 RIVET HOLES, PER GUIDE MARKS ON FRAME AS REQD. 1 BOLSTER SYSTEM 6 HOLES NOT REQD.)
98	Y07 CONVENIENCE PKG (AAB), 6-WAY PWR P/SEAT ADJR (AG2), RECL FRT BKT ST, LUXURY (AQ9), IL3	12455536	1		FRAME, P/SEAT BK CUSH
98–99	Y07 MAN RECL FRT BKT ST, DELUXE (AR9)	12455536	1		FRAME, P/SEAT BK CUSH
98	Y67 CONVENIENCE PKG (AAB), MAN RECL FRT BKT ST, DELUXE (AR9)	12455536	1		FRAME, P/SEAT BK CUSH
98–01	Y67 6-WAY PWR P/SEAT ADJR (AG2), RECL FRT BKT ST, LUXURY (AQ9) IL3	12455536	1		FRAME, P/SEAT BK CUSH
99	Y MAN RECL FRT BKT ST, DELUXE (AR9)	12455474	1	171.00	FRAME, P/SEAT BK CUSH
99–02	Y MAN RECL FRT BKT ST, DELUXE (AR9)	12455536	1		FRAME, P/SEAT BK CUSH
99–02	Y07 6-WAY PWR P/SEAT ADJR (AG2), RECL FRT BKT ST, LUXURY (AQ9), IL3	12455536	1		FRAME, P/SEAT BK CUSH
99	Y07–67 RECL FRT BKT ST, LUXURY (AQ9) 6-WAY PWR P/SEAT ADJR (AG2), IL3	12455474	1	171.00	FRAME, P/SEAT BK CUSH
99–04	Y37 MAN RECL FRT BKT ST DELUXE (AR9)	12455536	1		FRAME, P/SEAT BK CUSH
00	Y07–67 RECL FRT BKT ST LUXURY (AQ9) 6-WAY PWR P/SEAT ADJR (AG2) IL3	12455536	1		FRAME, P/SEAT BK CUSH
97–02	Y67	20464602	1	118.00	INSULATOR F/SEAT BK BODY PNL (16.402)
99–02	Y37	20464602	1	118.00	INSULATOR F/SEAT BK BODY PNL (16.402)

cardiagn.com

11.373 BOLT – FRAME – INSULATOR – PANEL, Front Seat Back(Con't)

97–99	Y	10290554	LH	53.50	PANEL, F/SEAT BK BODY
97–99	Y	10290555	RH	53.50	PANEL, F/SEAT BK BODY
00	Y	10409443	RH	51.75	PANEL, F/SEAT BK BODY (W/O REINFORCEMENT) (10.527)
00	Y	10409444	LH	51.50	PANEL, F/SEAT BK BODY (W/O REINFORCEMENT)
01	Y (1ST DES)	10409443	RH	51.75	PANEL, F/SEAT BK BODY (W/O REINFORCEMENT) (10.527) (CARS BUILT WITH AND AFTER THE LAST EIGHT DIGIT OF VIN 15117747;FOR 2ND DESIGN SEE 10449456)
01	Y (1ST DES)	10409444	LH	51.50	PANEL, F/SEAT BK BODY (W/O REINFORCEMENT) (CARS BUILT WITH AND AFTER THE LAST EIGHT DIGIT OF VIN 15117747;FOR 2ND DESIGN SEE 10449455)
01	Y (2ND DES)	10449455	LH	51.75	PANEL, F/SEAT BK BODY (CARS BUILT PRIOR TO LAST 8 DIGITS OF VIN 15117747)
01	Y (2ND DES)	10449456	RH	51.75	PANEL, F/SEAT BK BODY (CARS BUILT PRIOR TO LAST 8 DIGITS OF VIN 15117747)
02	Y	10449455	LH	51.75	PANEL, F/SEAT BK BODY
02	Y	10449456	RH	51.75	PANEL, F/SEAT BK BODY

11.375 BRACKET, Front Seat Bottom Hinge

97–02	Y	10272746	2	9.10	BRACKET, D/SEAT BK CUSH PIV
97–02	Y	10272746	2	9.10	BRACKET, P/SEAT BK CUSH PIV

11.377 BOLT – CABLE – HANDLE – PIN – RECLINER – SPRING, Front Seat Back Reclining

97–98	Y MAN RECL FRT BKT ST, DELUXE (AR9)	14009631	1	3.33	BOLT, D/SEAT RECL (M8X1 25X21 16 3 O D.) (RR) (11.390)
97–98	Y MAN RECL FRT BKT ST, DELUXE (AR9), (EXC CONVENIENCE PKG (AAB)	16751144	3	*.08	BOLT, D/SEAT RECL ACTR CBL (08 977)
97–98	Y RECL FRT BKT ST, LUXURY (AQ9), IL3	16751144	3	*.08	BOLT D/SEAT RECL ACTR CBL (08 977)
97–98	Y MAN RECL FRT BKT ST, DELUXE (AR9)	16751144	3	*.08	BOLT, P/SEAT RECL ACTR CBL (08 977)
97–98	Y RECL FRT BKT ST, LUXURY (AQ9), 6 - WAY PWR P/SEAT ADJR (AG2), IL3	16751144	3	*.08	BOLT, P/SEAT RECL ACTR CBL (08 977)
97–02	Y	10278650	1	18.20	CABLE, D/SEAT RECL ACTR
97–02	Y	10278653	1	18.20	CABLE, P/SEAT RECL ACTR
97–02	Y	10272651	1	3.45	HANDLE, D/SEAT RECL (EBONY)
97–02	Y	10272652	1	3.45	HANDLE, P/SEAT RECL
97–02	Y07 RECL FRT BKT ST, LUXURY (AQ9), MAN RECL FRT BKT ST, DELUXE (AR9)	10277906	2	3.45	PIN, D/SEAT RECL (REAR)
97–02	Y07 RECL FRT BKT ST, LUXURY (AQ9), MAN RECL FRT BKT ST, DELUXE (AR9)	10403404	2	.99	PIN, D/SEAT RECL (FRT) (WIRE SPIRAL PIN)
98–02	Y07 RECL FRT BKT ST, LUXURY (AQ9) MAN RECL FRT BKT ST, DELUXE (AR9)	10277906	2	3.45	PIN, D/SEAT RECL (REAR)
98–02	Y37 MAN RECL FRT BKT ST, DELUXE (AR9) RECL FRT BKT ST LUXURY (AQ9)	1040349	2	.99	PIN, D SEAT RECL (FRT) (WIRE SPIRAL PIN)
98–02	Y37 MAN RECL FRT BKT ST, DELUXE (AR9)	10277906	2	3.45	PIN D SEAT RECL (REAR)

cardiagn.com

11.377 BOLT – CABLE – HANDLE – PIN – RECLINER – SPRING, Front Seat Back Reclining(Con't)

99–02	Y37 MAN RECL FRT BKT ST, DELUXE (AR9)	10403494	2	.99	PIN, D/SEAT RECL (FRT) (WIRE SPIRAL PIN)
97–02	Y07 RECL FRT BKT ST, LUXURY (AQ9), MAN RECL FRT BKT ST, DELUXE (AR9)	10277965	2	3.45	PIN, P/SEAT RECL (REAR)
97–02	Y07 RECL FRT BKT ST, LUXURY (AQ9), MAN RECL FRT BKT ST, DELUXE (AR9)	10403494	2	.99	PIN, P/SEAT RECL (FRT) (WIRE SPIRAL PIN)
98–02	Y67 RECL FRT BKT ST, LUXURY (AQ9), MAN RECL FRT BKT ST, DELUXE (AR9)	10277965	2	3.45	PIN, P/SEAT RECL (REAR)
98–02	Y67 MAN RECL FRT BKT ST, DELUXE (AR9), RECL FRT BKT ST, LUXURY (AQ9)	10403494	2	.99	PIN, P/SEAT RECL (FRT) (WIRE SPIRAL PIN)
99–02	Y37 MAN RECL FRT BKT ST, DELUXE (AR9)	10277965	2	3.45	PIN, P/SEAT RECL (REAR)
99–02	Y37 MAN RECL FRT BKT ST, DELUXE (AR9)	10403494	2	.99	PIN, P/SEAT RECL (FRT) (WIRE SPIRAL PIN)
97–02	Y	10272506	1	35.00	RECLINER, D/SEAT (INR)
97–02	Y	10277957	1	35.00	RECLINER, D/SEAT (OTR)
97–02	Y	10272506	1	35.00	RECLINER, P/SEAT (INR)
97–02	Y	10277957	1	35.00	RECLINER, P/SEAT (OTR)
97–02	Y	16749319	1	1.15	SPRING, D/SEAT RECL HDL
97–01	Y	16749319	1	1.15	SPRING, P/SEAT RECL HDL
02	Y37 MAN RECL FRT BKT ST, DELUXE (AR9)	16749319	1	1.15	SPRING, P/SEAT RECL HDL

11.378 BLADDER – HARNESS – PUMP, Front Seat Lumbar

97–98	Y RECL FRT BKT ST, LUXURY (AQ9)	12455492	2	219.00	BLADDER, D/SEAT LATERAL SUPT
99	Y07–67 RECL FRT BKT ST, LUXURY (AQ9)	12455492	2	219.00	BLADDER, D/SEAT LATERAL SUPT
97	Y07 RECL FRT BKT ST, LUXURY (AQ9)	12455492	1	219.00	BLADDER, D/SEAT LUMBAR SUPT
98	Y RECL FRT BKT ST, LUXURY (AQ9), (1ST DES)	12455492	1	219.00	BLADDER, D/SEAT LUMBAR SUPT
98	Y RECL FRT BKT ST, LUXURY (AQ9), (1ST DES)	12455492	1	219.00	BLADDER, D/SEAT LUMBAR SUPT (USED W/2 - BLADDER BOLSTER SEAT SYSTEM) (FOR 2ND DES SEE 12455476)
99–02	Y07 RECL FRT BKT ST, LUXURY (AQ9)	12455492	1	219.00	BLADDER, D/SEAT LUMBAR SUPT
99–02	Y67 RECL FRT BKT ST, LUXURY (AQ9)	12455492	1	219.00	BLADDER, D/SEAT LUMBAR SUPT
99	Y07 - 67 RECL FRT BKT ST, LUXURY (AQ9)	12455492	1	219.00	BLADDER, D/SEAT THIGH SUPT
00–01	Y67 RECL FRT BKT ST, LUXURY (AQ9)	12455492	1	219.00	BLADDER, D/SEAT THIGH SUPT
97	Y RECL FRT BKT ST, LUXURY (AQ9)	12455492	2	219.00	BLADDER, P/SEAT LATERAL SUPT
98	Y RECL FRT BKT ST, LUXURY (AQ9), (1ST DES)	12455492	2	219.00	BLADDER, P/SEAT LATERAL SUPT
99	Y07 - 67 RECL FRT BKT ST, LUXURY (AQ9)	12455492	2	219.00	BLADDER, P/SEAT LATERAL SUPT
97	Y07 RECL FRT BKT ST, LUXURY (AQ9)	12455492	1	219.00	BLADDER, P/SEAT LUMBAR SUPT
98	Y RECL FRT BKT ST, LUXURY (AQ9)	12455492	1	219.00	BLADDER, P/SEAT LUMBAR SUPT
99	Y RECL FRT BKT ST, LUXURY (AQ9), (1ST DES)	12455492	1	219.00	BLADDER, P/SEAT LUMBAR SUPT (USED W/2 - BLADDER BOLSTER SEAT SYSTEM) (FOR 2ND DES SEE 12455476)

cardiagn.com

11.378 BLADDER – HARNESS – PUMP, Front Seat Lumbar(Con't)

99–02	Y07–67 RECL FRT BKT ST, LUXURY (AQ9)	12455492	1	219.00	BLADDER, P/SEAT LUMBAR SUPT
99–02	Y07–67	12455470	1	82.00	HARNESS, D/SEAT AIR SPLY
97	Y RECL FRT BKT ST, LUXURY (AQ9), IL3	10273427	1	152.00	PUMP, D/SEAT & P/SEAT CUSH AIR
98	Y RECL FRT BKT ST, LUXURY (AQ9), IL3, (1ST DES)	10273427	1	152.00	PUMP, D/SEAT & P/SEAT CUSH AIR (USED W/2–BLADDER BOLSTER SEAT SYSTEM) (FOR 2ND DES SEE 12455475)
98–02	Y07–67 RECL FRT BKT ST, LUXURY (AQ9)	12455493	1	152.00	PUMP, D/SEAT & P/SEAT CUSH AIR
00	Y67 RECL FRT BKT ST, LUXURY (AQ9)	10273427	1	152.00	PUMP, D/SEAT & P/SEAT CUSH AIR

11.379 BRACKET – SPRING, Front Seat Bolster

97	Y07 RECL FRT BKT ST, LUXURY (AQ9), IL3	10285825	LH	27.75	BRACKET, D/SEAT BK CUSH SI BOLS ADJ (OTR)
97	Y07 RECL FRT BKT ST, LUXURY (AQ9), IL3	10285826	RH	27.75	BRACKET, D/SEAT BK CUSH SI BOLS ADJ (INR)
97	Y07 RECL FRT BKT ST, LUXURY (AQ9), IL3	12455492	LH	219.00	BRACKET, D/SEAT BK CUSH SI BOLS ADJ (OTR) (11.378)
97	Y07 RECL FRT BKT ST, LUXURY (AQ9), IL3	12455492	RH	219.00	BRACKET, D/SEAT BK CUSH SI BOLS ADJ (INR) (11.378)
98–00	Y07–67 RECL FRT BKT ST, LUXURY (AQ9)	10285825	LH	27.75	BRACKET, D/SEAT BK CUSH SI BOLS ADJ (OTR)
98–00	Y07–67 RECL FRT BKT ST, LUXURY (AQ9)	10285826	RH	27.75	BRACKET, D/SEAT BK CUSH SI BOLS ADJ (INR)
97	Y07 6–WAY PWR P/SEAT ADJR (AG2), RECL FRT BKT ST, LUXURY (AQ9), IL3	10285825	LH	27.75	BRACKET, P/SEAT BK CUSH SI BOLS ADJ (INR)
97	Y07 6–WAY PWR P/SEAT ADJR (AG2), RECL FRT BKT ST, LUXURY (AQ9), IL3	10285826	RH	27.75	BRACKET, P/SEAT BK CUSH SI BOLS ADJ (OTR)
97	Y07 6–WAY PWR P/SEAT ADJR (AG2), RECL FRT BKT ST, LUXURY (AQ9), IL3	12455492	LH	219.00	BRACKET, P/SEAT BK CUSH SI BOLS ADJ (INR) (11.378)
97	Y07 6–WAY PWR P/SEAT ADJR (AG2), RECL FRT BKT ST LUXURY (AQ9), IL3	12455492	RH	219.00	BRACKET, P/SEAT BK CUSH SI BOLS ADJ (OTR) (11.378)
98–00	Y07–67 6–WAY PWR P/SEAT ADJR (AG2), RECL FRT BKT ST, LUXURY (AQ9)	10285825	LH	27.75	BRACKET, P/SEAT BK CUSH SI BOLS ADJ (INR)
98–00	Y07–67 6–WAY PWR P/SEAT ADJR (AG2), RECL FRT BKT ST LUXURY (AQ9)	10285826	RH	27.75	BRACKET, P/SEAT BK CUSH SI BOLS ADJ (OTR)

11.390 BEZEL – CABLE – RIVET, Front Seat Back Lock

97–02	Y MAN RECL FRT BKT ST, DELUXE (AR9), (191)	10288900	1	1.40	BEZEL, D/SEAT BK CUSH LAT REL HDL (BLACK)
97–99	Y RECL FRT BKT ST, LUXURY (AQ9), (943)	10288901	1	1.40	BEZEL, D/SEAT BK CUSH LAT REL HDL (RED)
97–99	Y MAN RECL FRT BKT ST, DELUXE (AR9), (941)	10288901	1	1.40	BEZEL, D/SEAT BK CUSH LAT REL HDL (RED)
97–01	Y MAN RECL FRT BKT ST, DELUXE (AR9), (921)	10288902	1	1.40	BEZEL, D/SEAT BK CUSH LAT REL HDL (PEWTER)
97–02	Y RECL FRT BKT ST, LUXURY (AQ9) (923)	10288902	1	1.40	BEZEL, D/SEAT BK CUSH LAT REL HDL (PEWTER)
97	Y07 RECL FRT BKT ST, LUXURY (AQ9), (193)	10288900	1	1.40	BEZEL, D/SEAT BK CUSH LAT REL HDL (BLACK)
98–01	Y MAN RECL FRT BKT ST, DELUXE (AR0), (670)	10288903	1	1.40	BEZEL, D/SEAT BK CUSH LAT REL HDL (CAMEL)

cardiagn.com

11.390 BEZEL – CABLE – RIVET, Front Seat Back Lock(Con't)

98–02	Y07–67 RECL FRT BKT ST, LUXURY (AQ9), (193)	10288900	1	1.40	BEZEL, D/SEAT BK CUSH LAT REL HDL (BLACK)
98–02	Y07–67 RECL FRT BKT ST, LUXURY (AQ9), (673)	10288903	1	1.40	BEZEL, D/SEAT BK CUSH LAT REL HDL (CAMEL)
00–02	Y MAN RECL FRT BKT ST, DELUXE (AR9), (70I)	10408563	1	1.40	BEZEL, D/SEAT BK CUSH LAT REL HDL (RED)
00–02	Y07–67 RECL FRT BKT ST, LUXURY (AQ9), (70I)	10408563	1	1.40	BEZEL, D/SEAT BK CUSH LAT REL HDL (RED)
97–02	Y MAN RECL FRT BKT ST, DELUXE (AR9), (19I)	10288900	1	1.40	BEZEL, P/SEAT BK CUSH LAT REL HDL (BLACK)
97–99	Y RECL FRT BKT ST, LUXURY (AQ9), (943)	10288901	1	1.40	BEZEL, P/SEAT BK CUSH LAT REL HDL (RED)
97–99	Y MAN RECL FRT BKT ST, DELUXE (AR9), (94I)	10288901	1	1.40	BEZEL, P/SEAT BK CUSH LAT REL HDL (RED)
97–01	Y RECL FRT BKT ST, LUXURY (AQ9), (923)	10288902	1	1.40	BEZEL, P/SEAT BK CUSH LAT REL HDL (PEWTER)
97–02	Y MAN RECL FRT BKT ST, DELUXE (AR9), (92I)	10288902	1	1.40	BEZEL, P/SEAT BK CUSH LAT REL HDL (PEWTER)
97	Y07 RECL FRT BKT ST, LUXURY (AQ9), (193)	10288900	1	1.40	BEZEL, P/SEAT BK CUSH LAT REL HDL (BLACK)
98–02	Y MAN RECL FRT BKT ST, DELUXE (AR9), (67I)	10288903	1	1.40	BEZEL, P/SEAT BK CUSH LAT REL HDL (CAMEL)
98–02	Y07–67 RECL FRT BKT ST, LUXURY (AQ9), (193)	10288900	1	1.40	BEZEL, P/SEAT BK CUSH LAT REL HDL (BLACK)
98–02	Y07–67 RECL FRT BKT ST, LUXURY (AQ9), (673)	10288903	1	1.40	BEZEL, P/SEAT BK CUSH LAT REL HDL (CAMEL)
00	Y MAN RECL FRT BKT ST, DELUXE (AR9), (70I)	10408563	1	1.40	BEZEL, P/SEAT BK CUSH LAT REL HDL (RED)
00–02	Y07–67 RECL FRT BKT ST, LUXURY (AQ9), (703)	10408563	1	1.40	BEZEL, P/SEAT BK CUSH LAT REL HDL (RED)
02	Y07–67 RECL FRT BKT ST, LUXURY (AQ9), (923)	10288902	1	1.40	BEZEL, P/SEAT BK CUSH LAT REL HDL (PEWTER)
97–02	Y07 RECL FRT BKT ST, LUXURY (AQ9), (19I)	10288904	1	27.25	CABLE, D/SEAT BK CUSH LAT REL (BLACK)
97–02	Y07 MAN RECL FRT BKT ST, DELUXE (AR9), (19I)	10288904	1	27.25	CABLE, D/SEAT BK CUSH LAT REL (BLACK)
97–99	Y07 RECL FRT BKT ST, LUXURY (AQ9), (943)	10288905	1	27.25	CABLE, D/SEAT BK CUSH LAT REL (RED)
97–99	Y07 MAN RECL FRT BKT ST, DELUXE (AR9), (943)	10288905	1	27.25	CABLE, D/SEAT BK CUSH LAT REL (RED)
97–01	Y07 MAN RECL FRT BKT ST, DELUXE (AR9), (92I)	10288906	1	27.25	CABLE, D/SEAT BK CUSH LAT REL (PEWTER)
97–02	Y07 RECL FRT BKT ST, LUXURY (AQ9), (92I)	10288906	1	27.25	CABLE, D/SEAT BK CUSH LAT REL (PEWTER)
99–02	Y07 RECL FRT BKT ST, LUXURY (AQ9), MAN RECL FRT BKT ST, DELUXE (AR9), (67I)	10288907	1	27.25	CABLE, D/SEAT BK CUSH LAT REL (OAK)
98–02	Y67	10409022	1	29.00	CABLE, D/SEAT BK CUSH LAT REL (BLACK) (W/LEVER) (W/2 PIGTAILS)
99–02	Y37 MAN RECL FRT BKT ST, DELUXE (AR9), (19I), (EXC CONVENIENCE PKG (AAB)	10288904	1	27.25	CABLE, D/SEAT BK CUSH LAT REL (BLACK)
00–02	Y07 MAN RECL FRT BKT ST, DELUXE (AR9), RECL FRT BKT ST, LUXURY (AQ9), (70I)	10408562	1	27.25	CABLE, D/SEAT BK CUSH LAT REL (RED)
01–02	Y37 MAN RECL FRT BKT ST, DELUXE (AR9), (70I)	10408562	1	27.25	CABLE, D/SEAT BK CUSH LAT REL (RED)
02	Y07 MAN RECL FRT BKT ST, DELUXE (AR9) (92I)	10288906	1	27.25	CABLE, D/SEAT BK CUSH LAT REL (PEWTER)

cardiagn.com

11.390 BEZEL – CABLE – RIVET, Front Seat Back Lock(Con't)

97–02	Y07 MAN RECL FRT BKT ST, DELUXE (AR9), RECL FRT BKT ST, LUXURY (AQ9), (19I)	10288904	1	27.25	CABLE, P/SEAT BK CUSH LAT REL (BLACK)
97–99	Y07 RECL FRT BKT ST, LUXURY (AQ9), (943)	10288905	1	27.25	CABLE, P/SEAT BK CUSH LAT REL (RED)
97–99	Y07 MAN RECL FRT BKT ST, DELUXE (AR9), (943)	10288905	1	27.25	CABLE, P/SEAT BK CUSH LAT REL (RED)
97–99	Y07 RECL FRT BKT ST, LUXURY (AQ9), (92I)	10288906	1	27.25	CABLE, P/SEAT BK CUSH LAT REL (PEWTER)
97–02	Y07 MAN RECL FRT BKT ST, DELUXE (AR9), RECL FRT BKT ST, LUXURY (AQ9), (92I)	10288906	1	27.25	CABLE, P/SEAT BK CUSH LAT REL (PEWTER)
98–02	Y07 MAN RECL FRT BKT ST, DELUXE (AR9), RECL FRT BKT ST, LUXURY (AQ9), (67I)	10288907	1	27.25	CABLE, P/SEAT BK CUSH LAT REL (OAK)
98–02	Y07–67 MAN RECL FRT BKT ST, DELUXE (AR9), RECL FRT BKT ST, LUXURY (AQ9)	12455538	2	27.25	CABLE, P/SEAT BK CUSH LAT REL (W/1 PIGTAIL)
98–02	Y67	10409022	1	29.00	CABLE, P/SEAT BK CUSH LAT REL (BLACK) (W/LEVER) (W/2 PIGTAILS)
99–00	Y37 MAN RECL FRT BKT ST, DELUXE (AR9), (19I)	10288904	1	27.25	CABLE, P/SEAT BK CUSH LAT REL (BLACK)
99–02	Y37 MAN RECL FRT BKT ST, DELUXE (AR9)	12455538	2	27.25	CABLE, P/SEAT BK CUSH LAT REL (W/1 PIGTAIL)
00–02	Y07 RECL FRT BKT ST, LUXURY (AQ9), (70I)	10408562	1	27.25	CABLE, P/SEAT BK CUSH LAT REL (RED)

11.419 FRAME – RETAINER – RIVET – SPRING – WIRE, Front Seat Cushion

97–02	Y	12455425	1	192.00	FRAME, D/SEAT CUSH (3 ATTACHING HOLES FOR CUSHION PANEL)
97	Y	12455425	1	192.00	FRAME, P/SEAT CUSH (3 ATTACHING HOLES FOR CUSHION PANEL)
98	Y RECL FRT BKT ST, LUXURY (AQ9)	12455425	1	192.00	FRAME, P/SEAT CUSH (3 ATTACHING HOLES FOR CUSHION PANEL)
98–02	Y	12455425	1	192.00	FRAME, P/SEAT CUSH (3 ATTACHING HOLES FOR CUSHION PANEL)
97	Y	10288827	12	3.45	RIVET, D/SEAT CUSH FRM
97	Y07	10288827	12	3.45	RIVET, P/SEAT CUSH FRM
97–02	Y	10272689	1	3.45	WIRE, D/SEAT CUSH PAD SUPT
97–02	Y	10272689	1	3.45	WIRE, P/SEAT CUSH PAD SUPT

11.556 RELAY, Front Seat Adjuster

97–02	Y	10406008	1	109.00	RELAY, ST ADJR

11.558 MODULE – SWITCH, Front Seat Adjuster

97	Y07 RECL FRT BKT ST, LUXURY (AQ9), MAN RECL FRT BKT ST, DELUXE (AR9)	09360841	1	223.00	MODULE, D/SEAT CONT
98–99	Y07 -67 RECL FRT BKT ST, LUXURY (AQ9)	09360841	1	223.00	MODULE, D/SEAT CONT
98–99	Y07 - 67 CONVENIENCE PKG (AAB), MAN RECL FRT BKT ST, DELUXE (AR9)	09360841	1	223.00	MODULE, D/SEAT CONT
00–02	Y CONVENIENCE PKG (AAB), MAN RECL FRT BKT ST, DELUXE (AR9)	10435193	1	223.00	MODULE, D/SEAT CONT
00–02	Y07 67 RECL FRT BKT ST, LUXURY (AQ9)	10435193	1	223.00	MODULE, D/SEAT CONT
97–01	Y RECL FRT BKT ST, LUXURY (AQ9)	12135158	1	54.75	SWITCH, D/SEAT ADJR (W/LUMBAR SWITCH)

cardiagn.com

11.558 MODULE – SWITCH, Front Seat Adjuster(Con't)

97–02	Y MAN RECL FRT BKT ST, DELUXE (AR9)	12135159	1	111.00	SWITCH, D/SEAT ADJR
02	Y07–67 RECL FRT BKT ST, LUXURY (AQ9)	12135158	1	54.75	SWITCH, D/SEAT ADJR (W/LUMBAR SWITCH)
97–01	Y RECL FRT BKT ST, LUXURY (AQ9)	12135158	1	54.75	SWITCH, P/SEAT ADJR (W/LUMBAR SWITCH)
97–01	Y MAN RECL FRT BKT ST, DELUXE (AR9)	12135159	1	111.00	SWITCH, P/SEAT ADJR
02	Y07–67 RECL FRT BKT ST, LUXURY (AQ9)	12135158	1	54.75	SWITCH, P/SEAT ADJR (W/LUMBAR SWITCH)

11.561 ADJUSTER – BRACKET – BUSHING – NUT – RETAINER, Front Seat Adjuster

97	Y CONVENIENCE PKG (AAB)	12455481	1	704.00	ADJUSTER, D/SEAT
97	Y RECL FRT BKT ST, LUXURY (AQ9), CONVENIENCE PKG (AAB)	88898621	1	690.00	ADJUSTER, D/SEAT
97	Y MAN RECL FRT BKT ST, DELUXE (AR9), CONVENIENCE PKG (AAB)	88898621	1	690.00	ADJUSTER, D/SEAT
97–00	Y07 RECL FRT BKT ST, LUXURY (AQ9), (EXC CONVENIENCE PKG (AAB)	12455535	1	492.00	ADJUSTER, D/SEAT
97–00	Y07 MAN RECL FRT BKT ST, DELUXE (AR9), (EXC CONVENIENCE PKG (AAB)	12455535	1	492.00	ADJUSTER, D/SEAT
98–00	Y07–67 CONVENIENCE PKG (AAB)	12455481	1	704.00	ADJUSTER, D/SEAT
98–00	Y07–67 MAN RECL FRT BKT ST, DELUXE (AR9), CONVENIENCE PKG (AAB)	88898621	1	690.00	ADJUSTER, D/SEAT
98–02	Y07–67 RECL FRT BKT ST, LUXURY (AQ9), CONVENIENCE PKG (AAB)	88898621	1	690.00	ADJUSTER, D/SEAT
98–00	Y67 MAN RECL FRT BKT ST, DELUXE (AR9), (EXC CONVENIENCE PKG (AAB)	12455535	1	492.00	ADJUSTER, D/SEAT
98–00	Y67 RECL FRT BKT ST, LUXURY (AQ9), (EXC CONVENIENCE PKG (AAB)	12455535	1	492.00	ADJUSTER, D/SEAT
99–00	Y37 MAN RECL FRT BKT ST, DELUXE (AR9), (EXC 6–WAY PWR D/SEAT ADJR (AG1)	10257833	1	533.00	ADJUSTER, D/SEAT (2 WAY)
99–00	Y37 6–WAY PWR D/SEAT ADJR (AG1), MAN RECL FRT BKT ST, DELUXE (AR9), (EXC CONVENIENCE PKG (AAB)	12455535	1	492.00	ADJUSTER, D/SEAT
01–02	Y07–67 MAN RECL FRT BKT ST, DELUXE (AR9), (EXC CONVENIENCE PKG (AAB)	88898622	1	492.00	ADJUSTER, D/SEAT
01–02	Y37 MAN RECL FRT BKT ST, DELUXE (AR9), CONVENIENCE PKG (AAB)	88898621	1	690.00	ADJUSTER, D/SEAT
01–02	Y37 MAN RECL FRT BKT ST, DELUXE (AR9), CONVENIENCE PKG (AAB)	88898621	1	690.00	ADJUSTER, D/SEAT
01–02	Y37 MAN RECL FRT BKT ST, DELUXE (AR9), (EXC CONVENIENCE PKG (AAB)	88898622	1	492.00	ADJUSTER, D/SEAT
97–98	Y MAN RECL FRT BKT ST, DELUXE (AR9), (EXC 6–WAY PWR P/SEAT ADJR (AG2)	10257906	1	446.00	ADJUSTER, P/SEAT
97	Y 6–WAY PWR P/SEAT ADJR (AG2)	12455534	1	492.00	ADJUSTER, P/SEAT

cardiagn.com

11.561 ADJUSTER – BRACKET – BUSHING – NUT – RETAINER, Front Seat Adjuster(Con't)

98–00	Y07–67 6–WAY PWR P/SEAT ADJR (AG2), RECL FRT BKT ST, LUXURY (AQ9), MAN RECL FRT BKT ST, DELUXE (AR9)	12455534	1	492.00	ADJUSTER, P/SEAT
99–02	Y MAN RECL FRT BKT ST, DELUXE (AR9)	10257906	1	446.00	ADJUSTER, P/SEAT
01–02	Y07–67 RECL FRT BKT ST, LUXURY (AQ9)	88898623	1	492.00	ADJUSTER, P/SEAT
98–02	Y	10410578	1	5.25	BRACKET, D/SEAT ADJR FRT
98–02	Y	10410578	1	5.25	BRACKET, P/SEAT ADJR FRT

11.573 BUSHING – COVER – RETAINER, Front Seat Adjuster Track

97–02	Y	10246916	2	3.45	COVER, D/SEAT ADJR FIN
97–02	Y	10246916	2	3.45	COVER, P/SEAT ADJR FIN
97–02	Y	10134407	1	*.54	RETAINER, D/SEAT INR ADJR FRT FIN CVR (PUSH IN) (01.272)
97–02	Y	10134407	1	*.54	RETAINER, D/SEAT OTR ADJR FRT FIN CVR (PUSH IN) (01.272)
97–02	Y	10134407	1	*.54	RETAINER, P/SEAT INR ADJR FRT FIN CVR (PUSH IN) (01.272)
97–02	Y	10134407	1	*.54	RETAINER, P/SEAT OTR ADJR FRT FIN CVR (PUSH IN) (01.272)

11.589 WIRE, Front Seat Adjuster Lock

99–00	Y37 MAN RECL FRT BKT ST, DELUXE (AR9), (EXC 6–WAY PWR D/SEAT ADJR (AG1)	12455472	1	15.10	WIRE, D/SEAT ADJR LAT

11.935 CONNECTOR, Courtesy/Dome/Reading Lamp

97–02	Y	12117371	2	25.70	CONNECTOR, SW–DM LP (3–WAY M W/LEADS) (02.530) (AC–DELCO #PT504)

12.170 BRACKET – BUMPER – CONNECTOR – EMBLEM – HINGE – INSULATOR – LATCH – LID – NUT – PANEL – PLATE – PLUG – PROTECTOR – SHIM – STRIKER – STRUT – WEATHERSTRIP, Folding Top Compartment

98–02	Y67	10282643	1	10.70	BRACKET, F/TOP STOW COMPT EXTN PNL
98–02	Y67	10405605	1	6.55	BRACKET, F/TOP STOW COMPT LID BPR
98–02	Y67	10404536	1	9.70	BRACKET, F/TOP STOW COMPT LID LAT
98–02	Y67	10103036	2	*.51	BUMPER, F/TOP STOW COMPT LID (POSN #1) (12.212)
98–02	Y67	10414378	1	3.45	BUMPER, F/TOP STOW COMPT LID (POSN #2)
98–02	Y67	10278669	2	3.45	BUMPER, F/TOP STOW COMPT LID HGE
98–02	Y67	12101825	1	18.01	CONNECTOR, SOL–F/TOP LAT REL ACTR (GRAY) (2–WAY F W/LEADS) (INDEX TAB CTR CAVITY A&B) (02.535) (AC–DELCO #PT217)
01–02	Y	12101888	2	18.01	CONNECTOR, SOL–F/TOP LAT REL ACTR (BLACK) (2–WAY F W/LEADS) (02.535) (AC–DELCO #PT159)
98–02	Y67	10282774	1	17.55	EMBLEM, F/TOP STOW CMPT EXTN OTR PNL

cardiagn.com

12.170 BRACKET – BUMPER – CONNECTOR – EMBLEM – HINGE – INSULATOR – LATCH – LID – NUT – PANEL – PLATE – PLUG – PROTECTOR – SHIM – STRIKER – STRUT – WEATHERSTRIP, Folding Top Compartment(Con't)

98–02	Y67	10418263	LH	41.00	HINGE, F/TOP STOW COMPT LID
98–02	Y67	10418266	RH	41.00	HINGE, F/TOP STOW COMPT LID
98–02	YY67	10308440	2	3.45	INSULATOR, F/TOP STOW FRT
98–99	YY67	10404291	1	3.45	INSULATOR, F/TOP STOW FRT (POS #2)
00–02	YY67	10404291	1	3.45	INSULATOR, F/TOP STOW FRT (POS #2)
98–02	Y67	10445389	1	82.25	LATCH, F/TOP STOW COMPT LID (W/ACTUATOR & LID AJAR SW)
98–02	Y67	10414341	1	438.00	LID, F/TOP STOW COMPT
98–01	Y67	20350354	4	*.55	NUT, F/TOP STOW COMPT EXTN PNL (PUSH–IN 6.3 SQ HOLE) (NYLON) (11.175)
00–02	Y67	00347347	4	*1.03	NUT, F/TOP STOW COMPT EXTN PNL (UPLEVEL) (01.267)
98–00	Y67 (10U)	10284823	1	252.00	PANEL, F/TOP STOW COMPT EXTN OTR (WHITE)
98–02	Y67 (11U)	10284824	1	252.00	PANEL, F/TOP STOW COMPT EXTN OTR (WHITE)
98–00	Y67 (23U)	10284825	1	252.00	PANEL, F/TOP STOW COMPT EXTN OTR (BLUE)
98–02	Y67 (41U)	10284826	1	252.00	PANEL, F/TOP STOW COMPT EXTN OTR (BLACK)
98	Y67 (53U)	10284827	1	252.00	PANEL, F/TOP STOW COMPT EXTN OTR (RED)
98–02	Y67 (70U)	10284830	1	252.00	PANEL, F/TOP STOW COMPT EXTN OTR (RED)
98	Y67 (87U)	10284831	1	252.00	PANEL, F/TOP STOW COMPT EXTN OTR (GREEN)
98–00	Y67 (13U)	10402183	1	252.00	PANEL, F/TOP STOW COMPT EXTN OTR (SILVER)
98–99	Y67 (95U)	10402184	1	252.00	PANEL, F/TOP STOW COMPT EXTN OTR (AMETHYST)
98	Y67 (21U)	10402821	1	252.00	PANEL, F/TOP STOW COMPT EXTN OTR (BLUE)
98–99	Y67 (58U)	10404958	1	252.00	PANEL, F/TOP STOW COMPT EXTN OTR (SUEDE)
98–01	Y67 (28U)	10421288	1	252.00	PANEL, F/TOP STOW COMPT EXTN OTR (BLUE)
99	Y67 (86U)	10298644	1	252.00	PANEL, F/TOP STOW COMPT EXTN OTR (RED)
00–02	Y67 (79U)	10410618	1	252.00	PANEL, F/TOP STOW COMPT EXTN OTR (YELLOW)
00–01	Y67 (91U)	10426575	1	252.00	PANEL, F/TOP STOW COMPT EXTN OTR (GREEN)
00–02	Y67 (86U)	10437434	1	252.00	PANEL, F/TOP STOW COMPT EXTN OTR (RED)
01–02	Y67 (40U)	10427429	1	252.00	PANEL, F/TOP STOW COMPT EXTN OTR (WHITE)
01–02	Y67 (12U)	10427447	1	252.00	PANEL, F/TOP STOW COMPT EXTN OTR (SILVER)
02	Y (21U)	10444464	1	342.00	PANEL, F/TOP STOW COMPT EXTN OTR (BLUE)
98–02	Y67	10279082	LH	4.65	PLATE, F/TOP STOW COMPT LID HGE ANC
98–02	Y67	10284586	RH	4.65	PLATE, F/TOP STOW COMPT LID HGE ANC

cardiagn.com

12.170 BRACKET – BUMPER – CONNECTOR – EMBLEM – HINGE – INSULATOR – LATCH – LID – NUT – PANEL – PLATE – PLUG – PROTECTOR – SHIM – STRIKER – STRUT – WEATHERSTRIP, Folding Top Compartment(Con't)

98–02	Y67	10279019	1	35.00	PROTECTOR, F/TOP STOW COMPT LID
98–02	Y67	10400232	1	2.95	SHIM, F/TOP STOW COMPT LID
98–02	Y67	10275646	1	9.50	STRIKER, F/TOP STOW COMPT LID LAT
98–02	Y67	10275941	2	17.55	STRUT, F/TOP STOW COMPT LID
98–02	Y67	10444523	1	98.50	WEATHERSTRIP, F/TOP STOW COMPT LID

12.243 ACTUATOR – CLIP – CONNECTOR – HANDLE – LATCH – RELAY – SWITCH, Rear Compartment Lid Release or Ajar

97–98	Y07	16625936	2	3.33	CLIP, R/CMPT LID LAT REL WRG HARN (R/CMPT L/WDO LATCH)
98–02	Y67	16625936	1	3.33	CLIP, R/CMPT LID LAT REL WRG HARN (F/TOP STOW CMPT LID LATCH)
98–02	Y67	16625936	1	3.33	CLIP, R/CMPT LID LAT REL WRG HARN (R/CMPT LID LATCH)
99–02	Y37	16625936	2	3.33	CLIP, R/CMPT LID LAT REL WRG HARN
02	YY	03816659	1	*.87	CLIP, R/CMPT LID LAT REL WRG HARN (7" ADJ, W/ROSEBUD FOR .25 DIA HOLE .031–.14 TH) (08.965)
99	Y07	12117371	2	25.70	CONNECTOR, MOT–R/CMPT LID PULDN ACTR (3–WAY M W/LEADS) (02.530) (AC–DELCO #PT504)
97–02	Y07 SPEAKER SYSTEM 6 (UZ6)	12101864	1	18.16	CONNECTOR, SW–R/CMPT LID AJAR IND (BLACK) (3–WAY F W/LEADS) (02.535) (AC–DELCO #PT256)
97–99	Y07	12117371	2	25.70	CONNECTOR, SW–R/CMPT LID AJAR IND (3–WAY M W/LEADS) (02.530) (AC–DELCO #PT504)
98–02	Y67 SPEAKER SYSTEM 6 (UZ6)	12101864	1	18.16	CONNECTOR, SW–R/CMPT LID AJAR IND (BLACK) (3–WAY F W/LEADS) (02.535) (AC–DELCO #PT256)
99–02	Y37	12101864	1	18.16	CONNECTOR, SW–R/CMPT LID AJAR IND (BLACK) (3–WAY F W/LEADS) (02.535) (AC–DELCO #PT256)
99–02	Y37	12117371	2	25.70	CONNECTOR, SW–R/CMPT LID AJAR IND (3–WAY M W/LEADS) (02.530) (AC–DELCO #PT504)
99–00	Y67	12117371	2	25.70	CONNECTOR, SW–R/CMPT LID AJAR IND (3–WAY M W/LEADS) (02.530) (AC–DELCO #PT504)
01–02	YY37	12101825	1	18.01	CONNECTOR, SW–R/CMPT LID REL (GRAY) (2–WAY F W/LEADS) (INDEX TAB CTR CAVITY A&B) (02.535) (AC–DELCO #PT217)
97–02	Y	12088567	1	16.45	RELAY, R/CMPT LID REL (GRAY) (4–WAY) (09.277) (AC–DELCO #15–8571)
97–02	Y (EXC EUROPEAN PROVISIONS (VD1) (EXPORT)	10276017	1	9.31	SWITCH, F/TNK FIL DR LK REL (03.028)
97–98	Y07	16608046	1	8.40	SWITCH, R/CMPT LID AJAR IND (LOCATED ON LAT IN TRUNK) (AC–DELCO #D1459C)
98–02	Y67	16608046	1	8.40	SWITCH, R/CMPT LID AJAR IND (LOCATED ON LAT IN TRUNK) (AC–DELCO #D1459C)

cardiagn.com

12.243 ACTUATOR – CLIP – CONNECTOR – HANDLE – LATCH – RELAY – SWITCH, Rear Compartment Lid Release or Ajar(Con't)

99–02	Y37	16608046	1	8.40	SWITCH, R/CMPT LID AJAR IND (LOCATED ON LAT IN TRUNK) (AC–DELCO #D1459C)
97–02	Y (EXC FRT FOG LP (T96), EUROPEAN PROVISIONS (VD1) (EXPORT)	12135157	1	57.96	SWITCH, R/CMPT LID REL (AC–DELCO #D7012C)
02	Y67	16608046	1	8.40	SWITCH, R/CMPT LID REL (LOCATED ON LAT IN TRUNK) (AC–DELCO #D1459C)
	*EXPORT*********EXPORT*********EXPORT*********EXPORT*********EXPORT*				
97–02	Y EUROPEAN PROVISIONS (VD1) (EXPORT)	10280957	1	66.19	SWITCH, R/CMPT LID & FUEL FIL DR REL (AC–DELCO #D7007C)

12.684 RETAINER – SEALING STRIP, Body Lock Pillar

98–02	Y67	20538173	2	3.45	RETAINER, BODY L/PLR UPR SEAL (BLACK) (4.8 HOLE) (14.685)

12.810 BEZEL – BOLT – BRACKET – HANDLE – LOCATOR – MOLDING – NUT – PANEL – PIN – PLATE – RETAINER – SPACER – WEATHERSTRIP, Roof Panel

Note: PLEASE REFER TO ACCESSORY GROUP 21.552 FOR WINDOWS NOT FOUND.

97–02	Y07 DUAL REMOVEABLE ROOF (C2L)	10293378	8	*1.65	BOLT, RF LIFT OFF PNL/WDO LAT HDL
97–02	Y07 CLEAR ROOF PANEL (CC3), REMOVABLE SUNROOF (CF7)	10293378	4	*1.65	BOLT, RF LIFT OFF PNL/WDO LAT HDL
00–01	Y67 CONV ROOF (C05)	10293378	4	*1.65	BOLT, RF LIFT OFF PNL/WDO LAT HDL
01–02	YY67 CONV ROOF (C05), (16T)	10293378	4	*1.65	BOLT, RF LIFT OFF PNL/WDO LAT HDL
97–02	Y07	15567059	4	3.33	BOLT, RF LIFT OFF PNL/WDO RR LOCR BRKT (HEX M10X1.5X28) (16.545)
97–02	Y07	10092102	4	*.52	BOLT, RF PNL (LWR RF) (M4.2X1.15X20)
99	Y37	11516932	4	*.61	BOLT, RF PNL FRT BRKT ("UPR FRT" ATTACHES TO FRAME–W/S) (08.900)
99–02	Y37	15567059	4	3.33	BOLT, RF PNL RR BRKT (UPR RR M10" INTO RF BOW) (HEX M10X1.5X28) (16.545)
97–02	Y07	10262515	LH	3.40	BRACKET, RF LIFT OFF PNL/WDO RR LOCR
97–02	Y07	10262516	RH	3.40	BRACKET, RF LIFT OFF PNL/WDO RR LOCR
97–02	Y07	10284474	2	16.45	BRACKET, RF LIFT OFF PNL/WDO STOW FRT (W/COVER & INSULATOR) (12.815)
99–02	Y37	10290699	LH	4.95	BRACKET, RF PNL FRT (UPR FRT)
99–02	Y37	10290700	RH	4.95	BRACKET, RF PNL FRT (UPR FRT)
99–01	Y37	10291419	LH	7.85	BRACKET, RF PNL RR (UPR RR)
99–01	Y37	10291420	RH	7.85	BRACKET, RF PNL RR (UPR RR)
97–02	Y07	10281487	2	*.69	NUT, RF LIFT OFF PNL/WDO RR LOCR BRKT (POSN #1) (CENTER OF RF PANEL BOW) (04.665)
97–02	Y07	10285255	4	3.45	NUT, RF LIFT OFF PNL/WDO RR LOCR BRKT (POSN #2) (AT ENDS OF RF PANEL BOW)
99	Y37	10258563	7	3.45	NUT, RF PNL (14.686)
99–02	Y37	10285255	4	3.45	NUT, RF PNL RR BRKT (UPR RR M10")
97–02	Y07	10289224	1	219.00	PANEL, RF
99–02	Y37	10255235	1	2687.00	PANEL, RF

cardiagn.com

12.810 BEZEL – BOLT – BRACKET – HANDLE – LOCATOR – MOLDING – NUT – PANEL – PIN – PLATE – RETAINER – SPACER – WEATHERSTRIP, Roof Panel(Con't)

97–02	Y07 REMOVABLE SUNROOF (CF7), DUAL REMOVEABLE ROOF (C2L)	12453435	1	1118.00	PANEL, RF LIFT OFF (PRIMED) (NON–TRANSPARENT)
97–02	Y07	10252874	1	21.15	RETAINER, RF LIFT OFF PNL/WDO RR W/STR
97–02	Y07	20538173	4	3.45	RETAINER, RF LIFT OFF PNL/WDO RR W/STR (PUSH IN) (#83) (BLACK) (4.8 HOLE) (14.685)
99–02	Y	10127825	2	.74	SPACER, RF PNL (NEUTRAL) (6.5MM) (10.027)
00	Y37	10445128	2	3.45	SPACER, RF PNL
00	Y37	10445128	2	3.45	SPACER, RF PNL
97	Y07	10415918	1	80.50	WEATHERSTRIP, RF LIFT OFF PNL/WDO RR
98–02	Y07	10415918	1	80.50	WEATHERSTRIP, RF LIFT OFF PNL/WDO RR

12.811 BOLT – BUMPER – COVER – LATCH – RETAINER – STRIKER, Roof Ventilation

97–02	Y07 CLEAR ROOF PANEL (CC3), REMOVABLE SUNROOF (CF7)	10267173	2	3.05	COVER, RF LIFT OFF PNL/WDO LAT TR
97–02	Y07 DUAL REMOVEABLE ROOF (C2L)	10267173	4	3.05	COVER, RF LIFT OFF PNL/WDO LAT TR
97–02	Y07 CLEAR ROOF PANEL (CC3), REMOVABLE SUNROOF (CF7)	10275882	1	7.95	COVER, RF LIFT OFF PNL/WDO LAT TR (RR CTR CVR)
97–02	Y07 DUAL REMOVEABLE ROOF (C2L)	10275882	2	7.95	COVER, RF LIFT OFF PNL/WDO LAT TR (RR CTR CVR)
98–02	Y67	10267173	2	3.05	COVER, RF LIFT OFF PNL/WDO LAT TR
97–02	Y07	10263229	LH	31.00	STRIKER, RF LIFT OFF PNL/WDO FRT
97–02	Y07	10263230	RH	31.00	STRIKER, RF LIFT OFF PNL/WDO FRT
97–02	Y07	10263234	1	9.35	STRIKER, RF LIFT OFF PNL/WDO RR

12.895 PANEL – SEAL, Front Door Inner/Outer Panel

97–02	Y	12529725	LH	291.00	PANEL, FRT S/D OTR
97–02	Y	88894418	RH	291.00	PANEL, FRT S/D OTR
98–02	Y	11515174	AR	*1.75	SEAL, FRT S/D INR PNL HOLE (4 1/4"X7 1/2") (TRIM AS REQ'D) (15.492)

12.944 BRACKET – INSULATOR – LINER – PANEL, Rear Wheelhouse

97–98	Y07	12458932	RH	43.00	PANEL, BODY L/PLR INR (#55) (12.942)
97–98	Y07	12458933	LH	43.00	PANEL, BODY L/PLR INR (#55) (12.942)
98–02	Y67	12458930	RH	58.00	PANEL, BODY L/PLR INR
98–02	Y67	12458931	LH	58.00	PANEL, BODY L/PLR INR
99–02	Y07–37	12458932	RH	43.00	PANEL, BODY L/PLR INR (#55) (12.942)
99–02	Y07–37	12458933	LH	43.00	PANEL, BODY L/PLR INR (#55) (12.942)

12.952 BOW – SEALER, Roof

97–98	Y07	12455670	1	292.00	BOW, RF PNL (#62)
99–02	Y07	12459091	1	269.00	BOW, RF PNL
99–02	Y37	12459092	1	269.00	BOW, RF PNL
98–99	Y67 CONV ROOF (C05), (16T), VINYL TOP, DK ANTELOPE MET (67T)	12457478	1	226.00	BOW, RF PNL #3
00–02	YY67 CONV ROOF (C05), (16T)	12457478	1	226.00	BOW, RF PNL #3

cardiagn.com

12.966 BOLT – BRACKET – INSULATOR – NUT – PLATE – SEAL, Rear End

99–00	Y07	20464593	2	12.90	INSULATOR, R/END PNL (54" WIDE, SOLD BY THE FOOT, CUT AS REQ) (15.492)

12.977 LATCH, Cargo Compartment and Floor

97–02	Y	10290666	2	13.35	LATCH, FLR K/UP PNL CPT

12.980 BAR – BOLT – BRACE – BRACKET – EXTENSION – INSULATOR – PANEL KIT – PLATE – RAIL – REINFORCEMENT – SPACER – SUPPORT, Floor Pan

97–01	Y	10293680	RH	60.75	BRACE, FLR PNL TUN FRT
97–01	Y	10444631	LH	60.75	BRACE, FLR PNL TUN FRT
02	Y	10438452	RH	59.05	BRACE, FLR PNL TUN FRT (#35)
02	Y	10438453	LH	59.05	BRACE, FLR PNL TUN FRT (#35)
97–01	Y	10293681	LH	50.75	BRACE, FLR PNL TUN RR
97–01	Y	10293682	RH	50.75	BRACE, FLR PNL TUN RR
02	Y	10438455	LH		BRACE, FLR PNL TUN RR (#36)
02	Y	10438456	RH		BRACE, FLR PNL TUN RR (#36)
97–02	Y	10262059	LH	13.70	BRACE, U/B FRT S/RL UPR (07.039)
97–02	Y	10262060	RH	13.70	BRACE, U/B FRT S/RL UPR (07.039)
97–02	Y	10271958	1	25.00	BRACKET, DRVR F/RST
97–02	Y	10284285	LH	5.70	BRACKET, FLR PNL TUN PNL SI FRT
97–02	Y	10284286	RH	5.70	BRACKET, FLR PNL TUN PNL SI FRT
97–02	Y	10284287	LH	5.70	BRACKET, FLR PNL TUN PNL SI RR
97–02	Y	10284288	RH	5.70	BRACKET, FLR PNL TUN PNL SI RR
97–01	Y	10250149	LH	14.55	BRACKET, FLR PNL TUN REINF
97–01	Y	10250150	RH	14.55	BRACKET, FLR PNL TUN REINF
02	Y	10449844	LH	14.15	BRACKET, FLR PNL TUN REINF (#32)
02	Y	10449845	RH	14.15	BRACKET, FLR PNL TUN REINF (#32)
97–98	Y	10285633	1	12.95	INSULATOR, FLR PNL FRT
99–02	Y	10285633	1	12.95	INSULATOR, FLR PNL FRT (RH ONLY)
97–02	Y	20464593	1	12.90	INSULATOR, FLR PNL FRT CTR (54" WIDE, SOLD BY THE FOOT, CUT AS REQ) (15.492)
97–02	Y	12533430	LH	559.00	RAIL, U/B FRT SI (INCLUDES NUT 10281493)
97–02	Y	12533431	RH	559.00	RAIL, U/B FRT SI (INCLUDES NUT 10281493)
97–02	Y	12533432	LH	559.00	RAIL, U/B RR SI
97–02	Y	12533433	RH	559.00	RAIL, U/B RR SI
97–02	Y	12533434	LH	503.00	RAIL, U/B SI (CTR)
97–02	Y	12533435	RH	503.00	RAIL, U/B SI (CTR)
97–02	Y	10278039	1	3.33	SPACER, DRVR F/RST BRKT
97	Y	10253535	2	8.53	SPACER, U/B S/RL (#107) (RED)
97	Y	10257863	2	8.53	SPACER, U/B S/RL (#104) (BLUE)

12.981 BOLT – FRAME – FRAME KIT – INSULATOR – PANEL KIT – REINFORCEMENT – RETAINER – RIVET – SPRING – SUPPORT, Rear Compartment Floor

97–00	Y07	20464593	1	12.90	INSULATOR, R/FLR PNL CTR (54" WIDE, SOLD BY THE FOOT, CUT AS REQ) (15.492)
99–00	Y67	20464592	1	118.00	INSULATOR, R/FLR PNL CTR (15.492)
99–00	Y37	20464592	1	118.00	INSULATOR, R/FLR PNL CTR (15.492)
98	Y67	15748479	4	*.62	RETAINER, R/CMPT PNL FRM SUPT TR (13.0MM WIDE) (YELLOW) (U–BASE) (16.575)

cardiagn.com

12.981 BOLT – FRAME – FRAME KIT – INSULATOR – PANEL KIT – REINFORCEMENT – RETAINER – RIVET – SPRING – SUPPORT, Rear Compartment Floor(Con't)

98–99	Y67	25535427	2	*.67	RETAINER, R/CMPT PNL FRM SUPT TR (01.209)
99–02	Y37–67	15748479	4	*.62	RETAINER, R/CMPT PNL FRM SUPT TR (13.0MM WIDE) (YELLOW) (U–BASE) (16.575)
98–02	Y67	10407692	4	3.33	RIVET, R/CMPT PNL (FRM SUPT) (1/4"DIA) (ALUMINIUM)
98	Y67	10408901	RH	69.75	SUPPORT, R/CMPT PNL FRM
98	Y67	10408902	LH	69.75	SUPPORT, R/CMPT PNL FRM
99–02	Y37–67	10408901	RH	69.75	SUPPORT, R/CMPT PNL FRM
99–02	Y37–67	10408902	LH	69.75	SUPPORT, R/CMPT PNL FRM

13.090 BOLT – CLIP – CONNECTOR – GROMMET – HARNESS – RETAINER – WIRE, Body Wiring

97–02	Y	21020632	4	3.33	CLIP, BODY FRT WRG HARN
97	Y07	21020632	11	3.33	CLIP, BODY RR WRG HARN
98–02	Y	21020632	7	3.33	CLIP, BODY RR WRG HARN
97	Y	21020632	11	3.33	CLIP, BODY WRG HARN
98	Y67	12085481	1	18.12	CONNECTOR, INLINE–TO F/TOP HARN (BLACK) (2–WAY M W/LEADS) (02.535) (AC–DELCO #PT103)
98–00	Y67	12125621	1	15.46	CONNECTOR, INLINE–TO F/TOP HARN (2–WAY F) (W/LEADS) (12.243) (AC–DELCO #PT533)
01–02	YY67	12125621	1	15.46	CONNECTOR, INLINE–TO F/TOP HARN (2–WAY F) (W/LEADS) (12.243) (AC–DELCO #PT533)
97–02	Y	10412644	2	8.81	GROMMET, S/D WRG (LH & RH)
97–98	Y07	12189550	1	244.62	HARNESS, BODY FRT WRG
98	Y67 SPEAKER SYSTEM 6 (UZ6)	12189958	1	244.62	HARNESS, BODY FRT WRG
99–00	Y07 (EXC MULTIPLE CD PLYR (U1S)	12189597	1	244.62	HARNESS, BODY FRT WRG
99–00	Y07 MULTIPLE CD PLYR (U1S)	12189889	1	244.62	HARNESS, BODY FRT WRG
99–00	Y37 MULTIPLE CD PLYR (U1S)	12163772	1	244.62	HARNESS, BODY FRT WRG
99–00	Y37 (EXC MULTIPLE CD PLYR (U1S)	12189595	1	510.00	HARNESS, BODY FRT WRG
99–00	Y67 (EXC MULTIPLE CD PLYR (U1S)	12189599	1	244.62	HARNESS, BODY FRT WRG
99–00	Y67 MULTIPLE CD PLYR (U1S)	12189962	1	244.62	HARNESS, BODY FRT WRG
01–02	YY07 SPEAKER SYSTEM 6 (UZ6), (EXC MULTIPLE CD PLYR (U1S)	15329382	1		HARNESS, BODY FRT WRG
01–02	YY07 SPEAKER SYSTEM 6 (UZ6), MULTIPLE CD PLYR (U1S)	15329383	1	244.62	HARNESS, BODY FRT WRG
01–02	YY37	15329378	1		HARNESS, BODY FRT WRG
01–02	YY67 SPEAKER SYSTEM 6 (UZ6), (EXC MULTIPLE CD PLYR (U1S)	15329386	1	244.62	HARNESS, BODY FRT WRG
01–02	YY67 SPEAKER SYSTEM 6 (UZ6), MULTIPLE CD PLYR (U1S)	15329387	1	244.62	HARNESS, BODY FRT WRG
97–02	Y07 (EXC TAIL & S/LP (T89) (EXPORT), SPECIAL TAIL & S/LP (T93)	12130411	1	251.96	HARNESS, BODY RR WRG
98–99	Y67 (EXC TAIL & S/LP (T69) (EXPORT), SPECIAL TAIL & S/LP (T93)	12189532	1	526.79	HARNESS, BODY RR WRG
99	Y37 (EXC TAIL & S/LP (T89) (EXPORT), SPECIAL TAIL & S/LP (T93)	12189532	1	526.79	HARNESS, BODY RR WRG
00–02	Y07 SPECIAL TAIL & S/LP (T93), (EXC TAIL & S/LP (T89) (EXPORT)	12189885	1	526.79	HARNESS, BODY RR WRG

cardiagn.com

13.090 BOLT – CLIP – CONNECTOR – GROMMET – HARNESS – RETAINER – WIRE, Body Wiring(Con't)

00–02	Y37 -67 (EXC TAIL & S/LP (T89) (EXPORT), SPECIAL TAIL & S/LP (T93)	12189532	1	526.79	HARNESS, BODY RR WRG
00–02	Y37--67 SPECIAL TAIL & S/LP (T93), (EXC TAIL & S/LP (T89) (EXPORT)	12189534	1	526.79	HARNESS, BODY RR WRG
97–98	Y CONVENIENCE PKG (AAB), MAN RECL FRT BKT ST, DELUXE (AR9)	10410580	1	66.23	HARNESS, D/SEAT ADJR WRG
97	Y07 MAN RECL FRT BKT ST, DELUXE (AR9), (EXC CONVENIENCE PKG (AAB)	10410691	1	66.23	HARNESS, D/SEAT ADJR WRG
98–00	Y07–67 MAN RECL FRT BKT ST, DELUXE (AR9), (EXC CONVENIENCE PKG (AAB)	10410691	1	66.23	HARNESS, D/SEAT ADJR WRG
99–00	Y07–67 CONVENIENCE PKG (AAB), MAN RECL FRT BKT ST, DELUXE (AR9), (EXC T&T WHL (N37)	10410580	1	66.23	HARNESS D/SEAT ADJR WRG
99–00	Y07–67 CONVENIENCE PKG (AAB), MAN RECL FRT BKT ST, DELUXE (AR9), T&T WHL (N37)	12455471	1	66.23	HARNESS, D/SEAT ADJR WRG
99–00	Y37 6–WAY PWR D/SEAT ADJR (AG1), MAN RECL FRT BKT ST, DELUXE (AR9), (EXC CONVENIENCE PKG (AAB)	10410691	1	66.23	HARNESS, D/SEAT ADJR WRG
01–02	Y07–67 MAN RECL FRT BKT ST, DELUXE (AR9)	10410691	1	66.23	HARNESS, D/SEAT ADJR WRG
01	Y37 CONVENIENCE PKG (AAB), MAN RECL FRT BKT ST, DELUXE (AR9)	10410580	1	66.23	HARNESS, D/SEAT ADJR WRG
01–02	Y37 MAN RECL FRT BKT ST, DELUXE (AR9), (EXC CONVENIENCE PKG (AAB)	10410691	1	66.23	HARNESS, D/SEAT ADJR WRG
02	YY37 CONVENIENCE PKG (AAB), MAN RECL FRT BKT ST, DELUXE (AR9)	10410580	1	66.23	HARNESS, D/SEAT ADJR WRG
01–02	Y (EXC I/S RR VIEW MIR (DD8)	12189953	1		HARNESS, DM LP & I/S RR VIEW MIR RDG LP WRG
97–00	Y	12163314	LH	263.00	HARNESS, DR LK & O/S RRVIEW MIR MEMORY INTERFACE MDL WRG
97–99	Y	12163315	RH	263.90	HARNESS, DR LK & O/S RRVIEW MIR MEMORY INTERFACE MDL WRG
00–02	Y SPECIAL TAIL & S/LP (T93)	12163315	RH	263.90	HARNESS, DR LK & O/S RRVIEW MIR MEMORY INTERFACE MDL WRG
01–02	Y ELEC R/CON HTD MIR (DL8)	12163314	LH	263.90	HARNESS, DR LK & O/S RRVIEW MIR MEMORY INTERFACE MDL WRG
01–02	Y O/S ELEC R/CON MIR (DD0)	12189556	LH	263.90	HARNESS, DR LK & O/S RRVIEW MIR MEMORY INTERFACE MDL WRG
01–02	Y EUROPEAN PROVISIONS (VD1) (EXPORT)	10441963	1		HARNESS, KEYLESS ENTRY WRG (ELEMENT)
97	Y07 6–WAY PWR P/SEAT ADJR (AG2), MAN RECL FRT BKT ST, DELUXE (AR9)	10410692	1	53.81	HARNESS, P/SEAT ADJR WRG
98–01	Y07–67 6–WAY PWR P/SEAT ADJR (AG2), MAN RECL FRT BKT ST, DELUXE (AR9)	10410692	1	53.81	HARNESS, P/SEAT ADJR WRG
99–00	Y	12020833	1	*.76	RETAINER, BODY WRG HARN CONN (GRAY) (PUSH–IN) (1" LONG) (02.559)
97–02	Y	21020632	6	3.33	RETAINER, DR WRG HARN
98	Y67	12130419	1	59.12	WIRE, CONV TOP

cardiagn.com

13.090 BOLT – CLIP – CONNECTOR – GROMMET – HARNESS – RETAINER – WIRE, Body Wiring(Con't)

*EXPORT***************EXPORT***************EXPORT***************EXPORT***************EXPORT*

97–01	Y07 TAIL & S/LP (T89) (EXPORT), (EXC SPECIAL TAIL & S/LP (T93) ..	12130413	1	244.62	HARNESS, BODY RR WRG .....
97–99	Y07 SPECIAL TAIL & S/LP (T93), (EXC TAIL & S/LP (T89) (EXPORT) .	12189885	1	526.79	HARNESS, BODY RR WRG ....
98	Y67 TAIL & S/LP (T89) (EXPORT), (EXC SPECIAL TAIL & S/LP (T93) ..	12189533	1	526.79	HARNESS, BODY RR WRG .....
98–99	Y67 SPECIAL TAIL & S/LP (T93), (EXC TAIL & S/LP (T89) (EXPORT) .	12189534	1	526.79	HARNESS, BODY RR WRG .....
99	Y37 SPECIAL TAIL & S/LP (T93), (EXC TAIL & S/LP (T89) (EXPORT) .	12189534	1	526.79	HARNESS, BODY RR WRG .....
99–02	Y37–67 TAIL & S/LP (T89) (EXPORT), (EXC SPECIAL TAIL & S/LP (T93)	12189533	1	526.79	HARNESS, BODY RR WRG .....
99–02	Y EUROPEAN PROVISIONS (VD1) (EXPORT)	12020833	1	*.76	RETAINER, BODY FRT WRG HARN CONN (GRAY) (PUSH–IN) (1" LONG) (02.559) .....

13.346 NUT – TOP – WEATHERSTRIP, Convertible and Hard Top

97	Y	10237960	6	.46	NUT, R/TOP BOLT GDE (M6X1.0) (10.512) .....
98–02	Y	10410398	6	*.51	NUT, R/TOP BOLT GDE (M6X1.0 ITR "D" THD) (10.512) .....
98–00	Y67 CONV ROOF (C05), (41T)	10445454	1	3177.00	TOP, FLDG (BLACK) .....
01–02	Y67 CONV ROOF (C05), (41T)	10306244	1	3177.00	TOP, FLDG (BLACK) .....
01–02	Y67 CONV ROOF (C05), VINYL TOP, DK ANTELOPE MET (67T)	10306245	1	3177.00	TOP, FLDG (METALLIC) .....
01–02	Y67 CONV ROOF (C05), (16T)	10306246	1	3177.00	TOP, FLDG (WHITE) .....
98–02	Y67 CONV ROOF (C05)	10446651	1	83.00	WEATHERSTRIP, F/TOP RR .....

13.347 COVER – FASTENER KIT – PANEL – RETAINER KIT – SHIELD – STRAP, Convertible Top Cover

98–00	Y67 CONV ROOF (C05), (41T)	12369653	1	1141.00	COVER, F/TOP (BLACK) (INCLS BACKLITE) (13.346) .....
98–02	Y67 CONV ROOF (C05), (16T)	12369654	1	1141.00	COVER, F/TOP (WHITE) .. ..
98–00	Y67 CONV ROOF (C05), VINYL TOP, DK ANTELOPE MET (67T)	12369655	1	1141.00	COVER, F/TOP (LT OAK) .....
01–02	YY67 CONV ROOF (C05), (41T)	88950135	1	1141.00	COVER, F/TOP (CLOTH MATERIAL AND INCLUDES THE WINDOW) .....
01–02	YY67 CONV ROOF (C05), VINYL TOP, DK ANTELOPE MET (67T) ...	88950136	1	1141.00	COVER, F/TOP (CLOTH MATERIAL AND INCLUDES THE WINDOW) .....
98–02	Y67 CONV ROOF (C05)	12369656	1	32.75	FASTENER KIT, F/TOP CVR .....
98–02	Y67 CONV ROOF (C05)	12369659	1	16.45	FASTENER KIT, F/TOP CVR SI TENS CBL (14.102) .....
98–02	Y67 CONV ROOF (C05)	12369652	1	36.25	FASTENER KIT, F/TOP HDLNG T/PNL CVR ....
98–02	Y67 CONV ROOF (C05)	12369650	1	21.90	FASTENER KIT, F/TOP STOW COMPT LID GLARE SHLD .....
98–02	Y67 CONV ROOF (C05)	12369651	1	1103.00	PANEL, F/TOP HDLNG TR (CVR) (14.640) .....
01–02	YY67 CONV ROOF (C05)	88950134	1	1103.00	PANEL, F/TOP HDLNG TR .....
98–02	Y67 CONV ROOF (C05)	12369649	1	274.00	SHIELD, F/TOP STOW COMPT LID GLARE ....
98–02	Y67 CONV ROOF (C05)	12369663	RH	131.00	STRAP, F/TOP FRM TENS .....
98–02	Y67 CONV ROOF (C05)	12369673	LH	131.00	STRAP, F/TOP FRM TENS ....

cardiagn.com